FLUVANNA COUNTY BOARD OF SUPERVISORS
REGULAR MEETING AGENDA

Circuit Courtroom, Fluvanna Courts Building
January 9, 2019 at 4:00 pm

TAB	AGENDA ITEMS
1 - CALL TO ORDER	
2 - PLEDGE OF ALLEGIANCE AND MOMENT OF SILENCE	
2019 Organizational Meeting of the Fluvanna County Board of Supervisors	
	Election of Chair
	Election of Vice Chair
	Adoption of a Resolution Entitled "Organizational Meeting of the Fluvanna County Board of Supervisors 2019"
	Adoption of 2019 Regular Meeting Calendar
	Adoption of Board Bylaws and Rules of Practice and Procedures
Regular Meeting	
3 – ADOPTION OF AGENDA	
4 – COUNTY ADMINISTRATOR'S REPORT	
5 – PUBLIC COMMENTS #1 (5 minutes each)	
6 – PUBLIC HEARING	
	None.
7 – ACTION MATTERS	
A	One Virginia 2021 Resolution of Support—Steven M. Nichols, County Administrator and Joe Shaver, One Virginia 2021 Representative
B	Preventive Maintenance and On-Call Repair and Emergency Services for Generators—Cyndi Toler, Purchasing Officer
C	Zion Crossroad Elevated Water Storage Tank Contract—Cyndi Toler, Purchasing Officer
D	Zion Crossroad Construction Bid Update—Cyndi Toler, Purchasing
7A – APPOINTMENTS	
E	Boards and Commissions—Steven M. Nichols, County Administrator
8 – PRESENTATIONS (normally not to exceed 10 minutes each)	
F	Community Volunteer Update – Carol Tracy Carr, Community Volunteer Coordinator
9 – CONSENT AGENDA	
G	Approval of Open Space Contract Renewal for Ginger Smith Johnson—Andrew M. Sheridan, Commissioner of the Revenue
H	Public Works Director Salary – Jessica Rice, HR Manager
I	CRMF Request – Historic Courthouse Repairs—Steven M. Nichols, County Administrator

Fluvanna County…The heart of Virginia and your gateway to the future!

For the Hearing-Impaired – Listening device available in the Board of Supervisors Room upon request. TTY access number is 711 to make arrangements.
For Persons with Disabilities – If you have special needs, please contact the County Administrator's Office at 591-1910.

J CRMF Request – Social Services Building Heat Pump—Steven M. Nichols, County Administrator

10 – UNFINISHED BUSINESS

TBD

11 – NEW BUSINESS

TBD

12 – PUBLIC COMMENTS #2 (5 minutes each)

13 – CLOSED MEETING

TBD

14 – ADJOURN

Digitally signed by Steven M. Nichols
Date: 2019.01.03 10:08:56 -05'00'

County Administrator Review

PLEDGE OF ALLEGIANCE

I pledge allegiance, to the flag,
of the United States of America,
and to the Republic for which it stands,
one nation, under God, indivisible,
with liberty and justice for all.

GENERAL RULES OF ORDER

1. It shall be the duty of the Chairman to maintain order and decorum at meetings. The Chairman shall speak to points of order in preference to all other members.

2. In maintaining decorum and propriety of conduct, the Chairman shall not be challenged and no debate shall be allowed until after the Chairman declares that order has been restored. In the event the Board wishes to debate the matter of the disorder or the bringing of order; the regular business may be suspended by vote of the Board to discuss the matter.

3. No member or citizen shall be allowed to use defamatory or abusive language directed at any member of the Board or other person, to create excessive noise, or in any way incite persons to use such tactics. The Chair shall be the judge of such breaches, however, the Board may by majority vote of the Board members present and voting to overrule the judgment of the Chair.

4. When a person engages in such breaches, the Chairman shall order the person's removal from the building, or may order the person to stand silent, or may, if necessary, order the person removed from the County property.

RULES OF PROCEDURE FOR PUBLIC HEARINGS

1. PURPOSE
   - The purpose of a public hearing is to receive testimony from the public on certain resolutions, ordinances or amendments prior to taking action.
   - A hearing is not a dialogue or debate. Its express purpose is to receive additional facts, comments and opinion on subject items.
2. SPEAKERS
   - Speakers should approach the lectern so they may be visible and audible to the Board.
   - Each speaker should clearly state his/her name and address.
   - All comments should be directed to the Board.
   - All questions should be directed to the Chairman. Members of the Board are not expected to respond to questions, and response to questions shall be made at the Chairman's discretion.
   - Speakers are encouraged to contact staff regarding unresolved concerns or to receive additional information.
   - Speakers with questions are encouraged to call County staff prior to the public hearing.
   - Speakers should be brief and avoid repetition of previously presented comments.
3. ACTION
   - At the conclusion of the public hearing on each item, the Chairman will close the public hearing.
   - The Board will proceed with its deliberation and will act on or formally postpone action on such item prior to proceeding to other agenda items.
   - Further public comment after the public hearing has been closed generally will not be permitted.

Fluvanna County…The heart of Virginia and your gateway to the future!

For the Hearing-Impaired – Listening device available in the Board of Supervisors Room upon request. TTY access number is 711 to make arrangements.
For Persons with Disabilities – If you have special needs, please contact the County Administrator's Office at 591-1910.

COUNTY OF FLUVANNA

"Responsive & Responsible Government"

P.O. Box 540
Palmyra, VA 22963
(434) 591-1910
Fax (434) 591-1911
www.fluvannacounty.org

2018-2019 STRATEGIC INITIATIVES AND ACTIONS

A	SERVICE DELIVERY
A1	Work with FRA to identify support options for Fire and Rescue volunteers.
A2	Continue to research and evaluate county-wide broadband expansion opportunities.
A3	Hold review meeting on ordinance enforcement (trash, buildings, vehicles) with Health Dept., Planning, Building Inspections, Public Works, and County Attorney.
A4	Perform strategic review of existing and needed partnerships with local area support and other non-profit groups. (Needed? Effective? Consolidate resource contributions?)
A5	Improve partnership with the school system for shared use of county and school owned facilities.
A6	Identify and assess resident concerns about roadway and public safety issues, and coordinate with VDOT for appropriate actions.
A7	Initiate comprehensive review of the Hwy 53 corridor from Lake Monticello Road to Ruritan Lake Road (e.g., Safety improvements at LM Monish Gate; 3-way stoplight at Food Lion; sight improvement at Ruritan Lake Road and Hwy 53; etc.)
B	**COMMUNICATION**
B1	Assess options to communicate more efficiently, effectively, and economically with Fluvanna residents.
B2	Marketing campaign to let residents know about accomplishments and where their tax dollars go.
B3	Meet with local Pastors to discuss effective communications and community support.
B4	Promote tax due dates, public hearings, etc., in FAN Mail.
B5	Expand County Website to receive, answer, and post questions from residents.
B6	Hold an Elected Official's Breakfast for our State Representatives in Fall of 2018
B7	Hold an Elected Official's Breakfast for our State Representatives in Fall of 2019
B8	Conduct 2019 Fluvanna County Residents Survey and analyze results.
C	**PROJECT MANAGEMENT**
C1	Continue Columbia area renewal efforts including improved enforcement of County/State codes and Health Department regulations.
C2	Complete a Master Water and Sewer (Plan Phase I) to identify sources for the county's long-term water needs; particularly for each of its community planning areas.
C3	Incorporate well-drilling logs provided by the Fluvanna Health Dept. into the county's geographic information system (GIS).
C4	Create master report and marketing plan regarding County tower assets and rental options.
C5	Investigate the use of Overlay Zones for the Zion Crossroads Community Planning Area to support economic development.

C6	Create a County-wide overlay map showing utilities and other key features that support business growth and development.
C7	Review and pursue opportunities and options for a Palmyra Village Streetscape project to improve safety, parking, walkability, and overall appearance.
C8	Successfully oversee and manage Fluvanna County aspects of the James River Water Project.
C9	Successfully oversee and manage the design and construction of the Zion Crossroads water and sewer system.
C10	Pursue Phase II of Fork Union streetscape project.
D	**ECONOMIC DEVELOPMENT AND TOURISM**
D1	Draft and adopt a formal County-wide economic development and tourism strategy inclusive of an implementation schedule.
D2	Develop a "This is Fluvanna County" video message to be shared with county citizens and businesses as well as use with county economic development initiatives.
D3	Coordinate development activity at Fluvanna's northern border with Louisa County, including possible natural gas line along 250 and discussing "shared" parcels.
D4	Conduct 2018 local Business Climate Survey and analyze results.
D5	Hold an Economic Development Discussion Forum for local businesses with planning, zoning, building inspections, infrastructure components.
D6	Investigate and pursue with State offices the installation of select Boat Ramps along the Rivanna and James Rivers to support additional recreational and tourism opportunities.
D7	Investigate opportunities for park expansion or Rivanna River access points to support expanded recreational activities
D8	Investigate allowing large lot subdivisions in A-1 as alternative to current cluster subdivisions. (Amend the zoning and subdivision ordinances to allow for varying lot sizes, from small clustered lots to large parcels suitable for continued farming and rural living.)
D9	Review higher density options between PDA and R4.
D10	Review options, pros, cons, costs, etc., of creating a "teaching farm" at PG Park,
E	**FINANCIAL STEWARDSHIP AND EFFICIENCY**
E1	Review local business license/registration options and pros/cons.
E2	Reduce the County's reliance on creating and mailing paper checks for payments and implement expanded ACH/EFT transaction options.
E3	Create monthly Treasurer's Report for BOS Package and quarterly in-person briefing on the data.
E4	Implement credit card payment option for citizen at all County funds collection points through MUNIS Cashiering process.
E5	Expand Fluvanna County Website Data Dashboard with key metrics.
E6	Implement easy to access electronic format code of ordinances (MuniCode or similar).

FLUVANNA COUNTY BOARD OF SUPERVISORS
AGENDA ITEM STAFF REPORT

MEETING DATE:	January 9, 2019				
AGENDA TITLE:	Election of Chair				
MOTION(s):	**I move to elect _____ as Chair of the Fluvanna County Board of Supervisors for calendar year 2019.**				
STRATEGIC INITIATIVE?	Yes	No	**If yes, list initiative(s):**		
		X			
AGENDA CATEGORY:	Public Hearing	Action Matter	Presentation	Consent Agenda	Other
					XX
STAFF CONTACT(S):	Kelly Belanger Harris, Clerk to the Board of Supervisors				
PRESENTER(S):	Steven M. Nichols, County Administrator				
RECOMMENDATION:	N/A				
TIMING:	Routine				
DISCUSSION:	As has been your practice in the past, the County Administrator opens the meeting and calls for the nominations for Chair, followed by voting of the members. 1. The County Administrator shall call for nominations from the membership. 2. Any member, after being recognized by the County Administrator, may place one or more names in nomination and discuss his or her opinions on the qualifications of the nominee(s). 3. When all nominations have been made, the County Administrator shall close the nominating process and call for the vote. 4. Each member may cast one vote for any one nominee. 5. A majority of those voting shall be required to elect the officer. Upon the election of the Chair, the elected chair will then call for the nomination and election of the Vice Chair. The Annual Organizational meeting of the Board will be conducted first and then move to the Regular meeting and conduct of business.				
FISCAL IMPACT:	N/A				
POLICY IMPACT:	N/A				
LEGISLATIVE HISTORY:	Code of Virginia § 15.2-1422. Electing a chairman and vice-chairman; mayor and vice-mayor				
ENCLOSURES:	Code of Virginia: Information regarding Annual Organizational meeting of the Board of Supervisors.				
REVIEWS COMPLETED:	Legal	Finance	Purchasing	HR	Other

§ 15.2-1422. Electing a chairman and vice-chairman; mayor and vice-mayor

Unless the chairman or mayor is elected by popular vote, every governing body, at its first meeting after taking office, shall elect one of its number as presiding officer. Such officer shall be called "chairman" if a member of a board of supervisors and "mayor" if a member of a city or town council. Such member, if present, shall preside at the first meeting and all other meetings during the term for which so elected. The governing body also shall elect a vice-chairman or vice-mayor, as the case may be, who shall preside at meetings in the absence of the chairman or mayor and may discharge any duty of the chairman or mayor during his absence or disability. Chairmen and vice-chairmen, mayors and vice-mayors, may be so elected to serve for terms corresponding with their terms as supervisors or councilmen or may be elected for such other period as determined by the governing body. Whenever any board or council at the time of such election, fails to designate the specific term of office for which a chairman or vice-chairman, a mayor or vice-mayor, is elected, it shall be presumed that such officers were elected for a term of one year and shall serve until their successors have been elected and qualify. Chairmen and vice-chairmen, mayors and vice-mayors, may succeed themselves in office. In the case of the absence from any meeting of the chairman and vice-chairman, mayor and vice-mayor, the members present shall choose one of their number as temporary presiding officer.

FLUVANNA COUNTY BOARD OF SUPERVISORS
AGENDA ITEM STAFF REPORT

MEETING DATE:	January 9, 2019				
AGENDA TITLE:	Election of Vice Chair				
MOTION(s):	**I move to elect _____ as Vice Chair of the Fluvanna County Board of Supervisors for calendar year 2019.**				
STRATEGIC INITIATIVE?	Yes	No	**If yes, list initiative(s):**		
		X			
AGENDA CATEGORY:	Public Hearing	Action Matter	Presentation	Consent Agenda	Other
					XX
STAFF CONTACT(S):	Kelly Belanger Harris, Clerk to the Board of Supervisors				
PRESENTER(S):	Steven M. Nichols, County Administrator				
RECOMMENDATION:	N/A				
TIMING:	Routine				
DISCUSSION:	As has been your practice in the past, the County Administrator opens the meeting and calls for the nominations for Chair, followed by voting of the members. Upon the election of the Chair, the elected chair will then call for the nomination and election of the Vice Chair. The Annual or Organizational meeting of the Board will be conducted first and then move to the Regular meeting and conduct of business.				
FISCAL IMPACT:	N/A				
POLICY IMPACT:	N/A				
LEGISLATIVE HISTORY:	Code of Virginia § 15.2-1422. Electing a chairman and vice-chairman; mayor and vice-mayor				
ENCLOSURES:	None				
REVIEWS COMPLETED:	Legal	Finance	Purchasing	HR	Other

§ 15.2-1422. Electing a chairman and vice-chairman; mayor and vice-mayor

Unless the chairman or mayor is elected by popular vote, every governing body, at its first meeting after taking office, shall elect one of its number as presiding officer. Such officer shall be called "chairman" if a member of a board of supervisors and "mayor" if a member of a city or town council. Such member, if present, shall preside at the first meeting and all other meetings during the term for which so elected. The governing body also shall elect a vice-chairman or vice-mayor, as the case may be, who shall preside at meetings in the absence of the chairman or mayor and may discharge any duty of the chairman or mayor during his absence or disability. Chairmen and vice-chairmen, mayors and vice-mayors, may be so elected to serve for terms corresponding with their terms as supervisors or councilmen or may be elected for such other period as determined by the governing body. Whenever any board or council at the time of such election, fails to designate the specific term of office for which a chairman or vice-chairman, a mayor or vice-mayor, is elected, it shall be presumed that such officers were elected for a term of one year and shall serve until their successors have been elected and qualify. Chairmen and vice-chairmen, mayors and vice-mayors, may succeed themselves in office. In the case of the absence from any meeting of the chairman and vice-chairman, mayor and vice-mayor, the members present shall choose one of their number as temporary presiding officer.

FLUVANNA COUNTY BOARD OF SUPERVISORS
AGENDA ITEM STAFF REPORT

MEETING DATE:	January 9, 2019
AGENDA TITLE:	Resolution/Organizational Meeting of the Fluvanna County Board of Supervisors
MOTION(s):	**I move to adopt the resolution entitled "Organizational Meeting of the Fluvanna County Board of Supervisors 2019" which designates the location, day, and time of meetings.** **Meeting Place:** • **Circuit Courtroom of the Fluvanna County Courts Building** **Meeting Times:** • **Day Meetings begin at 4:00 p.m. and end at 8:00 p.m., unless extended** • **Night Meetings begin at 7:00 p.m. and end at 11:00 p.m., unless extended** • **When scheduled, Work Sessions begin at 4:00 p.m. prior to the regular evening meeting**

STRATEGIC INITIATIVE?	Yes	No	**If yes, list initiative(s):**	
		X		

AGENDA CATEGORY:	Public Hearing	Action Matter	Presentation	Consent Agenda	Other
					XX

STAFF CONTACT(S):	Kelly Belanger Harris, Clerk to the Board of Supervisors
PRESENTER(S):	Steven M. Nichols, County Administrator
RECOMMENDATION:	Approval
TIMING:	Routine
DISCUSSION:	During the month of July, only one meeting will be held on the first Wednesday starting at 4:00 p.m., breaking for dinner, then reconvening at 7:00 p.m. for public hearings.
FISCAL IMPACT:	N/A
POLICY IMPACT:	N/A
LEGISLATIVE HISTORY:	N/A
ENCLOSURES:	Resolution

REVIEWS COMPLETED:	Legal	Finance	Purchasing	HR	Other

BOARD OF SUPERVISORS
County of Fluvanna
Palmyra, Virginia

RESOLUTION No. 01-2019

A RESOLUTION RECOGNIZING THE 2019 ORGANIZATIONAL MEETING OF THE BOARD OF SUPERVISORS

At the annual Organizational Meeting of the Fluvanna County Board of Supervisors held in the Fluvanna County Courts Building at 4:00 PM on Wednesday, January 9, 2019, the following resolution was adopted by the Board of Supervisors, the vote being as shown below and recorded in the minutes of the meeting.

WHEREAS, the Code of Virginia requires an annual organizational meeting for the Board of Supervisors for the election of officers and the conduct of such other business as to meeting times and dates and,

WHEREAS, the Board of Supervisors does now conduct such an organizational meeting;

NOW, THEREFORE BE IT RESOLVED by the Board of Supervisors that it does hereby designate the Circuit Courtroom in the Fluvanna Courts Building as its meeting place for Regular Meetings to be held on the first Wednesday of each month at 4:00 p.m. and the third Wednesday of each month at 7:00 p.m., except for the month of July when the only meeting shall be on the first Wednesday starting at 4:00 p.m., breaking for dinner, then reconvening at 7:00 p.m. for additional business or public hearings. When scheduled, Work Sessions will be held the third Wednesday of each month at 4:00 p.m. prior to the regular meeting.

BE IT FURTHER RESOLVED by the Board of Supervisors that it does hereby designate the fourth Wednesday at 7:00 p.m. as the meeting date for any such regular meeting that is postponed due to weather or such other circumstances.

THE FOREGOING RESOLUTION WAS DULY AND REGULARLY ADOPTED by the Fluvanna County Board of Supervisors at the annual Organizational Meeting of the Board held on the 9th day of January, 2019;

	AYE	NAY	ABSTAIN	ABSENT	MOTION	SECOND
Mozell H. Booker, Fork Union District	X					
Patricia B. Eager, Palmyra District	X					
Anthony P. O'Brien, Rivanna District	X					
John M. Sheridan, Columbia District	X					
Donald W. Weaver, Cunningham District	X					

A Copy, teste:

_____
Kelly Belanger Harris
Clerk to the Board of Supervisors
Fluvanna County, Virginia

FLUVANNA COUNTY BOARD OF SUPERVISORS
AGENDA ITEM STAFF REPORT

MEETING DATE:	January 9, 2019				
AGENDA TITLE:	Board of Supervisors 2019 Regular Meeting Calendar				
MOTION(s):	**I move to adopt the 2019 Board of Supervisors' Regular Meeting Calendar as presented.**				
STRATEGIC INITIATIVE?	Yes	No	**If yes, list initiative(s):**		
		X			
AGENDA CATEGORY:	Public Hearing	Action Matter	Presentation	Consent Agenda	Other
					XX
STAFF CONTACT(S):	Kelly Belanger Harris, Clerk to the Board of Supervisors				
PRESENTER(S):	Steven M. Nichols, County Administrator				
RECOMMENDATION:	Approval				
TIMING:	Routine				
DISCUSSION:	During the month of July, only one meeting will be held on the first Wednesday starting at 4:00 p.m., breaking for dinner, then reconvening at 7:00 p.m. for public hearings.				
FISCAL IMPACT:	N/A				
POLICY IMPACT:	N/A				
LEGISLATIVE HISTORY:	N/A				
ENCLOSURES:	Board of Supervisors 2019 Regular Meeting Calendar				
REVIEWS COMPLETED:	Legal	Finance	Purchasing	HR	Other

2019 Regular Meeting Calendar

Fluvanna County Board of Supervisors

All Meetings on Wednesday

Date	Regular Meetings	Work Sessions (When Scheduled)
Jan 9 (2nd Wed)	4:00 pm	
Jan 23 (4th Wed)	7:00 pm	4:00 pm
Feb 6	4:00 pm	
Feb 20	7:00 pm	4:00 pm
Mar 6	4:00 pm	
Mar 20	7:00 pm	4:00 pm
Apr 3	4:00 pm	
Apr 17	7:00 pm	4:00 pm
May 1	4:00 pm	
May 15	7:00 pm	4:00 pm
Jun 5	4:00 pm	
Jun 19	7:00 pm	4:00 pm
Jul 2 (1st Tue)	4:00 pm & 7:00 pm	
Aug 7	4:00 pm	
Aug 21	7:00 pm	4:00 pm
Sep 4	4:00 pm	
Sep 18	7:00 pm	4:00 pm
Oct 2	4:00 pm	
Oct 16	7:00 pm	4:00 pm
Nov 6	4:00 pm	
Nov 20	7:00 pm	4:00 pm
Dec 4	4:00 pm	
Dec 18	7:00 pm	4:00 pm

Adopted this 9th day of January 2019 by the Fluvanna County Board of Supervisors

FLUVANNA COUNTY BOARD OF SUPERVISORS
AGENDA ITEM STAFF REPORT

MEETING DATE:	January 9, 2019				
AGENDA TITLE:	Board of Supervisors' Bylaws and Rules of Practice and Procedures				
MOTION(s):	**I move to readopt the current Board of Supervisors' Bylaws and Rules of Practice and Procedures.**				
STRATEGIC INITIATIVE?	Yes	No	**If yes, list initiative(s):**		
		X			
AGENDA CATEGORY:	Public Hearing	Action Matter	Presentation	Consent Agenda	Other
					XX
STAFF CONTACT(S):	Kelly Belanger Harris, Clerk to the Board of Supervisors				
PRESENTER(S):	Steven M. Nichols, County Administrator				
RECOMMENDATION:	Approval				
TIMING:	Routine				
DISCUSSION:	The current Board of Supervisors' Bylaws and Rules of Practice and Procedures are presented for consideration, with revisions relating to travel reimbursement.				
FISCAL IMPACT:	N/A				
POLICY IMPACT:	N/A				
LEGISLATIVE HISTORY:	N/A				
ENCLOSURES:	Board of Supervisors' Bylaws and Rules of Practice and Procedures				
REVIEWS COMPLETED:	Legal	Finance	Purchasing	HR	Other

FLUVANNA COUNTY
BOARD OF SUPERVISORS

2019 BYLAWS AND RULES OF PRACTICE & PROCEDURES

Adopted
Pending January 9, 2019

TABLE OF CONTENTS

SECTION	TOPIC	PAGE
I	Creation	2
II	Seal of the Board	2
III	Principal Address	2
IV	Rules	2
V	Construction	2
VI	Definitions	3
VII	Board Chair	5
VIII	Board Vice Chair	5
IX	Board Members	5
X	County Administrator	5
XI	Clerk for the Board	6
XII	County Attorney	6
XIII	Parliamentary Procedure	6
XIV	Quorum for the Exercise of Board Business	6
XV	Meetings	6
XVI	Agenda Item Submission	8
XVII	Agenda Preparation	8
XVIII	Order of Business	9
XIX	Conduct of Business	10
XX	Motions	12
XXI	Voting	13
XXII	Recording of Meetings	14
XXIII	Orderly Conduct	14
XXIV	Ad Hoc Committees	15
XXV	Appointments to Boards, Commissions, and Committees (BCC)	15
~~XXVI~~	~~Official Board Travel~~	~~15~~
XXVI	Official Board Travel and Expense Reimbursement	15
XXVII	Approval of Certain Checks, Authorization to Sign with Stamp	~~15~~16

Fluvanna County Board of Supervisors
BYLAWS AND RULES OF PRACTICE AND PROCEDURES

I. CREATION. Fluvanna County Board of Supervisors, hereinafter called the Board, is an elected body provided by the Code of Virginia, Section 15.2-1400. It consists of five members with one elected from each of the five Election Districts.

II. SEAL OF THE BOARD. When affixed to any paper or document by the Clerk for the Board, the Seal has the force and effect for authentication for the Board.

III. PRINCIPAL ADDRESS. 132 Main Street, Palmyra, Virginia, mailing address: P.O. Box 540, Palmyra, Virginia 22963.

IV. RULES

A. These Bylaws and Rules of Practice and Procedures ("Rules") are adopted and shall apply to the Board of Supervisors of Fluvanna County. These Rules are intended to expedite transaction of the business of the Board of Supervisors in an orderly fashion. The Bylaws and Rules are deemed to be procedural only. The failure strictly to observe application of the Rules shall not affect the jurisdiction of the Board or invalidate any action taken at a meeting that is otherwise held in conformity with law.

B. All meetings and business shall be conducted in accordance with these Rules, Robert's Rules of Order Newly Revised (11th Edition), and the law of Virginia. In the event of conflict, the law of Virginia shall govern. A decision of the Chair with respect to the interpretation, applicability, or enforcement of these Rules may be overruled by a majority vote of the Members present and voting.

C. Except as otherwise provided by law, any rule of the Board may be suspended temporarily, upon approval of the majority of the Board members present and voting. The temporary suspension shall apply only to the matter under immediate consideration and, in no case, shall it extend beyond an adjournment.

D. No rule of the Board shall be adopted or amended except by majority vote of the Board.

V. CONSTRUCTION. As used in these Rules, the masculine shall include the feminine and the singular the plural unless otherwise specified herein. The word "shall" is mandatory and not discretionary; the word "may" is permissive and discretionary. The word "approve" shall be considered to be followed by the words "or disapprove".

VI. DEFINITIONS. As used in these Rules, the following terms are defined:

A. Action of Record. An action taken or decision made by the Board recorded in the Minutes of the Meetings. Except as otherwise required by law, an Action of Record may take the following forms:

1. Motions and seconds with the recorded votes of the members.

2. Consensus agreement of the Board without vote by the Board.

3. Directive of the Chair in the exercise of that office during the conduct of an official meeting of the Board.

B. Board. The Fluvanna County Board of Supervisors.

C. County Code. The Code of Fluvanna County.

D. Directive. An exercise of discretionary authority granted to the Chair from the Board empowering the Chair as follows:

1. To enforce the protocols of these Rules for the conduct of business and discourse before the Board to ensure proper decorum, civility, fairness and order.

2. To cause the removal of any person or persons without charge of civil or criminal offense for misconduct, disruption or disturbance of a meeting of the Board of Supervisors consistent with adopted policies and procedures of the Board.

3. To charge any person or persons with civil or criminal offenses pursuant to federal, state or local laws for the misconduct, disruption or disturbance of a meeting of the Board.

E. Item of Business. A matter to be presented before the Board at an official meeting, specified on the Meeting Agenda or modification thereof, and which may be subject to an Action of Record.

F. Meeting or Official Meeting. Any Annual Organizational, Regular, or Special Meeting of the Board of Supervisors. The following terms may also be used to further define and specify purposes for meetings. Meetings as defined herein are not exclusive of each other and may be concurrently conducted.

1. Annual Organizational Meeting: Pursuant to § 15.2-1416 of the Virginia Code, the Board's first meeting in the month of January. The County Administrator shall preside during the election of the Chair of the Board.

2. Joint Meeting: A Joint Meeting may be conducted simultaneously with one or more public bodies for the purpose of review, inquiry and discussion of matters of mutual interest or in the interest of expedient disposition of public business matters. Action of record may be taken at said meeting, and a quorum of both the Board and other body(ies) is required to Call to Order and conduct a Joint Special Meeting.

3. Public Information Meeting: A Public Information Meeting shall be limited to the dissemination of information to and/or from the public where the Board of Supervisors will take no Action of Record at said meeting. A quorum of the Board of Supervisors is not required to Call to Order and conduct a Public Information Meeting. Public Information Meetings may be called in the name of the Board of Supervisors or administratively by the County Administrator.

4. Public Hearing: A public hearing shall be conducted at said meeting and the Board of Supervisors may take Action of Record on such matters as may arise from the Public Hearing. A quorum of the Board of Supervisors is required to Call to Order and conduct a Public Hearing.

5. Recessed Meeting: A meeting conducted at a date, place and time set by the Board of Supervisors as a continuation of a previously held meeting. A Recessed Meeting shall be scheduled no later than the date of the next Regular Meeting.

6. Rescheduled Meeting: A Rescheduled Meeting shall be for the purpose of conducting a meeting of the Board of Supervisors where, by virtue of necessity or at the discretion of the Board of Supervisors, the originally scheduled meeting cannot be conducted on its prescribed date or time or at its prescribed location pursuant to these Rules. Action of Record may be taken on any Item of Business presented at a Rescheduled Meeting, and a quorum of the Board of Supervisors is required to Call to Order and conduct a Rescheduled Meeting.

7. Work Session Meeting: A Work Session Meeting shall be for the purpose of in-depth review, inquiry and discussion of specified Items of Business where Action of Record may be taken by the Board of Supervisors. A quorum of the Board of Supervisors is required to Call to Order and conduct said meeting. Work Session Meetings may also be called and scheduled for the purposes of presentations to the Board of Supervisors for educational and informational purposes.

G. Primary Motion. The first motion presented following informal discussion of any Item of Business at a Board meeting.

H. Substitute Motion. A motion presented succeeding and in lieu of a primary motion on any Item of Business at a Board meeting.

I. Virginia Code. The 1950 Code of Virginia, as amended.

VII. BOARD CHAIR

A. At the first meeting of the year, the Board selects one of its members to serve as Chair. The Chair is a voting member and serves for one year, or until his successor shall be elected and qualify as such.

B. The Chair, when present, shall preside at all meetings of the Board and shall take the Chair at the hour appointed for every Board meeting and shall immediately call the members to order and, except in the absence of a quorum, shall proceed with the business of the Board in the manner prescribed by these Rules. The Chair shall preserve order and decorum and shall decide all questions of order.

C. Upon the death, resignation or other permanent disability of the Chair to fulfill the duties of his office, the Board shall elect a new Chair at its next regularly scheduled meeting or as soon thereafter as possible.

VIII. BOARD VICE CHAIR

A. At the first meeting of the year, the Board selects one of its members to serve as Vice Chair. The Vice Chair is a voting member and serves for one year, or until his successor shall be elected and qualify as such.

B. In the absence, or inability to act, of the Chair, the Vice Chair shall have and exercise all the powers and duties of the Chair.

IX. BOARD MEMBERS

A. Notification of Absence. If any Board member is unable to attend a meeting, all reasonable effort shall be made to notify the Chair and the County Administrator as soon as possible to ensure there are sufficient members present and voting to consider all agenda items. The County Administrator shall continue an agenda item if there will not be a sufficient number of Board members present and voting at the meeting to approve the item.

B. Conflicts of Interest. At such times a Board member may find himself with a conflict of interest, the Board member shall state the nature of the conflict of interest prior to an issue being heard and shall remove himself from the meeting. The member shall not vote or in any manner act on behalf of the board with respect to the issue for which a conflict has been declared, until such time as the issue has been decided. The member shall not attend any portion of a closed meeting authorized by the Virginia Freedom of Information Act when the issue is discussed; and will not discuss the issue with other governmental officers or employees in their official capacity at any time.

X. COUNTY ADMINISTRATOR. The County Administrator shall assume the general duties as set forth in the Code of Virginia, Section 15.2-1541. He shall maintain an office at the same address as the Board. The County Administrator, or a designated representative, shall attend each

meeting of the Board and shall provide such information to the Board as necessary to assist Board members in their deliberations and decision making.

XI. CLERK FOR THE BOARD. The Executive Assistant to the County Administrator is appointed and shall serve as Clerk for the Board per Section 15.2-1538.

XII. COUNTY ATTORNEY. The County Attorney shall perform the duties set forth in Code Section 15.2-1542. The County Attorney or his deputy or assistant county attorney designated by him shall attend each meeting of the Board and shall serve as adviser to the Board on issues of law relating to the Board's business. The County Attorney assists the Board in analyzing the facts, provides advice and action in legal matters, and represents the Board in civil actions.

XIII. PARLIAMENTARY PROCEDURE. The County Attorney shall serve as the Parliamentarian for the purpose of interpreting these Bylaws and Rules of Procedure and Robert's Rules of Order as may be directed by the Chair, or as required as a result of a point of order raised by any one or more Board members. If the County Attorney is unavailable, the County Administrator shall serve as the Parliamentarian.

XIV. QUORUM FOR THE EXERCISE OF BOARD BUSINESS. A majority of the Board shall constitute a quorum for the purpose of conducting Board business.

XV. MEETINGS

A. Regular Meeting Schedule

1. Meetings are held on the first Wednesday of each month at 4:00 p.m. and on the third Wednesday of each month at 7:00 p.m. in the Fluvanna County Circuit Courtroom.

2. Meetings held on the first Wednesday will adjourn/recess no later than 8:00 p.m., and meetings held on the third Wednesday will adjourn/recess no later than 11:00 p.m.

3. The Board, at its pleasure, may continue its meeting beyond the normal adjournment/recess time, by majority vote of the board members present and voting.

4. Meetings shall start at the appointed time, and if the Chair is not present, the Vice Chair shall preside.

5. If neither the Chair nor the Vice Chair is present, the County Administrator shall call the meeting to order and preside for the election of a temporary Chair.

B. Work Sessions Schedule. When needed, Work Sessions are held on the third Wednesday of each month at 4:00 pm, prior to the 7:00 pm Regular Meeting, in the Fluvanna County Circuit Courtroom, unless another location is announced. Other days/times may be scheduled by majority consent of the Board.

C. Closed Meetings

1. Closed Meetings will be held as needed, but may only be convened in conformance with Section 2.2-3711 of the Code of Virginia (1950), as amended.

2. No resolution, ordinance, rule, contract, regulation, or motion agreed to in a Closed Meeting shall become effective until the Board reconvenes in an Open Session and takes a vote of the membership on such resolution, ordinance, rule, contract, regulation, or motion which shall have its substance reasonably identified in the open meeting.

3. At the conclusion of a Closed Meeting, the Board shall reconvene in Open Session immediately thereafter and shall take a roll call vote certifying that to the best of each member's knowledge:

a. Only public business matters lawfully exempted from Open Session requirements were discussed; and

b. Only public business matters identified in the motion convening the Closed Meeting were heard, discussed or considered.

Any member who believes that there was a departure from the above requirements shall so state prior to the vote, indicating the substance of the departure that, in his judgment, has taken place.

4. The failure of the certification to receive the affirmative vote of a majority of the members present and voting during the Closed Meeting shall not affect the validity or confidentiality of the Closed Meeting with respect to matters considered therein in compliance with the Freedom of Information Act.

5. The Board may permit non-members to attend a Closed Meeting if their presence will reasonably aid the Board in its consideration of an issue. Except as otherwise directed by the Board, the County Attorney and the County Administrator shall attend all Closed Meetings.

D. Special Meetings. The Board may hold Special Meetings as it deems necessary, at such times and places as it finds convenient, and may adjourn such special meetings from time to time as it finds convenient and necessary. Special Meetings shall be called and scheduled per §15.2-1418.

XVI. AGENDA ITEM SUBMISSION

A. All agenda items are due to the Clerk for the Board by COB Tuesday the week before the Board meeting, with the exception of presentations which are due by COB Tuesday the week of the meeting.

B. All agenda items require a *BOS Agenda Item Staff Report*. Staff Report and motion samples are available in the "Library/00-BOS Submissions" folder under "Procedures and Formats."

C. Copy all files into the "Library/00-BOS Submissions" folder (if you do not have access to the county's shared drive, email the materials to clerk@fluvannacounty.org).

D. Items can be in <u>any file format</u> (e.g., doc, docx, pdf, ppt, pptx, xls, xlsx)

E. <u>NO</u> paper copies of requested Agenda Items are required.

F. Name the submission files as follows:

For Agenda Category:	**Name Your File:**
06 Public Hearing	06-Short title of item similar to agenda
07 Action Matters	07-
07A Appointments	07A-
08 Presentations	08-
09 Consent Agenda	09-
10 Unfinished Business	10-
11 New Business	11-

XVII. <u>AGENDA PREPARATION</u>

A. The Clerk, under the direction of the County Administrator, shall prepare the agenda for meetings.

B. The County Administrator may at his discretion, and individual Board members may by request to the County Administrator, place matters of business on the Agenda according to the schedule in paragraph XVI.A above for discussion, information and/or action by the Board as are germane to the affairs and interests of the Board and county. However, this does not prevent the County Administrator or Board members, at their discretion, from having items included which are received after the regular cutoff date.

C. Any Constitutional Officer, department head, agency head, or citizen may also submit items for Agenda consideration provided such requests are received in advance according to the schedule in paragraph XVI.A above.

D. The County Administrator shall allocate time to items on the agenda to suit the convenience of the Board.

E. If the County Administrator considers a requested agenda item not appropriate for consideration by the Board, he shall inform the Chair for a decision. This does not prevent retaining the item on the agenda by majority consent of the Board.

F. The Chairman and County Administrator shall style routine, non-controversial matters requiring Board action on a Consent Agenda. Items may be removed from the Consent Agenda and placed on the Regular Agenda at the request of any Board member present. Only one motion is necessary to adopt all recommendations and action items on the Consent Agenda.

G. The Clerk for the Board shall submit the draft agenda to the Chair on the Wednesday in the week before a regularly scheduled meeting for the Chair's review and approval. Agendas for special or other meetings may have the preparation and approval timeline modified to accommodate the available timeframe.

H. Issues for which actions will be required shall normally have all materials in the agenda package for advance study.

I. The Board agenda and related materials shall be received by each member of the Board and the County Attorney not later than the Friday before the scheduled regular meeting. The Clerk for the Board may request an adjustment to the delivery schedule due to special circumstances.

J. The Clerk shall prepare extra copies of the agenda and shall make the same available to the public and the press in the Office of the County Administrator, the Public Library, and on the County website. The Clerk shall also have at least one hard copy available at each regular meeting.

XVIII. <u>ORDER OF BUSINESS</u>. The Order of Business shall be as follows unless the County Administrator in drawing up the Agenda shall find good cause to change it:

1 – Call to Order
2 – Pledge of Allegiance and Moment of Silence
3 – Adoption of Meeting Agenda
4 – County Administrator's Report
5 – Public Comments #1
6 – Public Hearing
7 – Action Matters
7A – Appointments
8 – Presentations
9 – Consent Agenda
10 – Unfinished Business
11 – New Business
12 – Public Comments #2
13 – Closed Meeting (as needed)
14 – Adjourn

XIX. CONDUCT OF BUSINESS

A. Basic Principles: The following principles should be observed at all times in the transaction of public business before the Board.

1. Only one subject may claim the attention of the Board at one time.

2. Each item presented for consideration is entitled to full and free discussion.

3. Every member has rights equal to every other member except as to procedural matters within the competence of the Chair.

4. The will of the majority must be carried out, and the rights of the minority must be preserved.

5. The personality and desires of each member should be merged into the larger unit of the Fluvanna County Board of Supervisors.

B. The Board shall adopt an agenda for each meeting by recorded vote of a majority of the Board members present and voting. The adoption of the agenda shall be the first item for action following the Call to Order, Pledge of Allegiance, and Moment of Silence.

C. Items shall be heard in order of the agenda, except as the Board decides when adopting the agenda and that the Board may vote to call up any matter at any time.

D. Except as provided in subsection F. of this Section XX, the Board shall take no Action of Record on any matter that is not on the Meeting Agenda unless a modification to the Meeting Agenda is requested at the time of Approval of the Agenda. Modification of the Meeting Agenda requires a majority vote of Board members present and voting.

E. The Board shall consider all items on the agenda before taking any other items, unless an unlisted item is brought by majority consent of the Board members present and voting.

F. Items not on the agenda shall be heard as the final items of the Board's business, time permitting, or shall be carried over to the next regular meeting or a special meeting as determined by majority consent of the Board.

G. Exhibits before the Board shall become the property of the Board and shall be filed with the Clerk and shall be deemed a part of the record of the meeting at which submitted.

H. Citizens shall not speak at a meeting until they are recognized. Citizens shall request recognition by addressing "Mr. Chair" or "Madam Chair" (as appropriate), stating their name,

their address, and awaiting acknowledgment by the Chair. The Chair may permit a dialogue without individual recognition between members of the Board or between a member and a citizen if such dialogue is orderly and contributes to the expeditious conduct of business.

I. Should it be desired by the Chair, any member, or by the County Administrator, the member making a resolution shall reduce the same to writing and deliver it to the County Administrator's Office. The Clerk shall take down verbal resolutions as accurately as possible to reflect the intent of the Board.

J. Prior to initiating a public hearing, the Chair shall recount, either verbatim or by reference, the rules under which the hearing shall be operated, but the Board may amend the rules during the hearing by giving notice of the change to those gathered (e.g., a change to the time limitation for individual speakers).

K. At the beginning of the public hearing, the Chair shall call upon the County Administrator or the other staff member handling the matter at hand to present a description of the issue placed before the hearing, or the Chair may do so himself.

L. Subject to revocation or extension by the majority of the Board assembled, the Chair may in all matters establish a maximum time for consideration of any matter, and/or limit the amount of time available to each speaker**,** including Board members, on a matter and/or limit the number of times each speaker may address the Board on a matter. Regardless, every Board member is entitled to speak on every matter before the Board and the call for the question shall not be entertained until all members who wish to exercise this right shall have done so at least once.

M. All members or citizens shall limit their comments before and to the Board. The Chair may prohibit questions from citizens until a speaker has finished his presentation.

N. The Board of Supervisors has set forth the following rules for time limits for various agenda items or comments from the public, unless modified by majority consent of the Board:

1. Action Item presentations shall be limited to thirty (30) minutes.

2. Presentations shall be limited to ten (10) minutes.

3. Public Comments shall be limited to five (5) minutes per individual.

O. Once a notice for Public Hearing has been advertised (regardless of the nature), the Public Hearing will be conducted, unless the Board formally defers the matter to a future meeting. The postponement or cancellation of a public hearing shall be as follows:

1. Any public hearing scheduled for a Board of Supervisors meeting that has been publicly advertised shall not be postponed based on a request from a non-County government entity or person absent extreme mitigating circumstances. The Chair, with concurrence of the County

Administrator, will determine when such circumstances exist. If mitigating circumstances exist, the petitioner will bear any cost incurred by the County in providing public notification of the change and for the cost of advertising the new date of the hearing.

2. The Chair, with the concurrence of the County Administrator, shall have the authority to postpone a public hearing based on the weather or other extraordinary circumstances.

3. In all cases, County staff will ensure all Board members are provided timely notification of schedule changes. Further, staff will ensure the public and general news media are notified of changes to schedules which have been announced in public. The public hearing shall be rescheduled, if appropriate, and advertised as required by law.

XX. MOTIONS

A. Motions by Board members shall require a second.

Exceptions. The following do not require a second:

- To Raise a Question of Privilege
- Questions of Order
- Objection to the Consideration of a Question
- Call up Motion to Reconsider
- Nominations
- Leave to Withdraw a Motion
- Inquiries of any kind

B. Motions shall not be formally discussed prior to being duly seconded.

C. After a motion is properly made and seconded, the Chair shall restate the motion and open the floor to discussion.

D. The Chair shall routinely refrain from making or seconding motions in order to fairly and impartially preside over the Board deliberations and discussion. In any case, the Chair shall not make or second a motion without first temporarily surrendering the chair to the Vice Chair, if present and willing to temporarily accept the gavel, or to another member present and willing to temporarily accept the gavel. In such event, he should not resume the chair until the motion is decided.

E. A maker of a motion may not speak against his motion.

F. The Chair shall call for and cause the vote to be recorded after the motion is properly made before the Board, has been seconded, and has been duly discussed. Any member believing a motion has been duly discussed may move or call for the previous question. Such motion shall not be debatable. However, if any member objects, the Chair shall call for a vote on the motion

calling for the previous question. If that motion carries, the Chair shall proceed to call for the vote on the motion before the Board. If the motion calling for the previous question is defeated, the debate on the main motion shall continue.

G. A substitute motion may be made by any member to any motion properly on the floor. Once seconded, the substitute motion shall take precedence and all debate or action on the existing motion shall cease until the substitute motion is decided. Debate on a substitute motion is permissible. If the substitute motion is passed by a majority vote of the members then present and voting, the original motion is supplanted by the substitute motion. A second substitute motion can be made only after the first substitute motion is decided by vote of the Board.

H. When a motion is made and then cannot obtain a second, the motion will die for lack of a second and does not require a vote. However, in the event that a motion which is not seconded is nevertheless voted on by the Board and passes by a majority of the members present and voting, the failure of a second shall not invalidate the adoption of such motion.

I. Defeated Motions

1. Same Meeting: A defeated motion can be brought back for consideration at the same meeting if the members present agree to do so by a majority vote. Only a member who voted on the prevailing side may make the motion to reconsider the issue. The rule restricting renewal of a motion in the same session does not apply to a motion that died for lack of a second.

2. Subsequent Meeting: Except as otherwise provided by law, a defeated motion that is still applicable can be re-introduced at a subsequent meeting as new business (under the normal process for new business).

XXI. VOTING

A. All Actions of Record must be approved by vote unless there is unanimous consent.

B. When the question is called and there is no dispute, the Chair shall call for the vote.

C. Whenever any member wishes to abstain from voting on any question, he shall so state and, if because of a conflict, shall indicate in accordance with the Virginia Conflict of Interests Act, Virginia Code § 2.2-3100 et seq., and his abstention shall be announced by the Chair and recorded by the Clerk.

D. The Chair's vote on all issues before the Board shall be recorded with the prevailing side, unless the Chair clearly votes otherwise.

E. The Clerk shall record the name of each member voting and how he voted.

F. A tie vote fails. The Board does not designate a tiebreaker pursuant to § 15.2-1421 of the Virginia Code.

G. Except as otherwise provided by law, motions shall be carried by a majority of the members present and voting in the affirmative (§15.2-1420), except that a majority affirmative vote of all members shall be required for any appropriation exceeding $500.00, the imposition of taxes, and the authorization for borrowing money (§15.2-1428).

XXII. RECORDING OF MEETINGS. The Clerk for the Board shall record each regular meeting. These recordings are the property of the Fluvanna County Board of Supervisors and are public records as provided by the Virginia Freedom of Information Act. Interested persons may listen to the recordings on the County website or in the County Administrator's office, or may obtain copies of the recording by making appropriate arrangements with the County Administrator's office. Costs will be borne by the person making the request. The original recordings shall not be borrowed or removed from the County Office Building, except under the specific prior authorization of the County Administrator.

XXIII. ORDERLY CONDUCT

A. It shall be the duty of the Chair to maintain order and decorum at meetings. The Chair, when presiding at a meeting of the Board, without vacating the chair, shall refer any point of order to the Parliamentarian.

B. In maintaining decorum and propriety of conduct, the Chair shall not be challenged and no debate shall be allowed until after the Chair declares that order has been restored. In the event the Board wishes to debate the matter of the disorder or the bringing of order, the regular business may be suspended to discuss the matter by majority vote of the Board members present and voting.

C. No member or citizen shall be allowed to use defamatory or abusive language directed at any member of the Board or other person, to create excessive noise, or in any way incite persons to use such tactics. The Chair shall be the judge of such breaches, however, the Board may by majority vote of the Board members present and voting to overrule the judgment of the Chair.

D. When a person engages in such breaches, the Chair may order the person's removal from the building, or may order the person to stand silent, may order the person removed from the County property, and may, at his discretion, bring formal charges for disruption of a public meeting.

XXIV. AD HOC COMMITTEES. Ad hoc committees will be appointed by the Chair as needed. Constitutional Officers may be appointed to committees.

XXV. APPOINTMENTS TO BOARDS, COMMISSIONS, AND COMMITTEES (BCC)

A. The Board may appoint such advisory boards, committees and commissions as it may deem necessary pursuant to Code Section 15.2-1411.

B. Information on all nominees for such appointments, whether to represent the County as a whole or a particular election district, shall be included in the Board package for the meeting at which the appointment will be considered. It shall be the policy of the Board as a whole to scrutinize and agree upon all appointees to represent the County in any capacity.

C. Appointments shall generally not be made more than 45 days prior to the commencement of a term for which the appointment is made.

~~**XXVI. OFFICIAL BOARD TRAVEL**~~

~~A. A Board member may travel officially in-state at the Board member's discretion. In-state travel shall include travel to Washington, D.C.~~

~~B. A Board member shall obtain advance Board approval for official out-of-state travel.~~

~~C. A report and accounting of funds shall be made for all travel for which the Supervisor is requesting payment or reimbursement from County funds.~~

XXVI. OFFICIAL BOARD TRAVEL AND EXPENSE REIMBURSEMENT

A. A Board member may travel officially in-state at the Board member's discretion. In-state travel shall include travel to Washington, D.C.

B. A Board member shall obtain advance Board approval for official out-of-state travel.

C. Supervisors are not eligible for mileage reimbursement for regularly scheduled BOS meetings (held generally on the 1st and 3rd Wednesdays).

D. Supervisors are eligible for mileage reimbursement for travel to and from:

1. BOS special meetings and work sessions not scheduled in conjunction with a regular meeting. Examples include periodic strategic planning meetings, budget meetings or other work sessions on different days from regular meetings, meetings with staff, etc.

2. Town hall meetings, community events, Chamber events, local area functions, etc., in support of their role as a County Supervisor.

3. Board, commission, and committee meetings when assigned as a part of their service as a County Supervisor (except when serving as the Board's representative to the Planning Commission, Social Services Board, or CVRJ Authority since those positions receive County remuneration for their service).

E. Supervisors may also be eligible for mileage reimbursement as private citizens for travel to and from various board, commission, and committee (BCC) meetings when assigned by the Board of Supervisors to such BCC roles.

F. Supervisors may complete and submit reimbursement claims following the procedures outlined in Policy 2.19, Travel and Expense Reimbursement.

XXVII. APPROVAL OF CERTAIN CHECKS, AUTHORIZATION TO SIGN WITH STAMP

A. The Chair, Vice Chair, County Administrator**,** and Treasurer are hereby authorized to sign and issue checks without prior approval of the Board for the following purposes: end of the month salaries, end of the month contracted personal services, utility payments, and other payments deemed appropriate and necessary by the Chair, County Administrator, and Treasurer; such actions to be reviewed and ratified at the next appropriate meeting of the Board.

B. The Chair of the Board of Supervisors, and in his absence, the Vice Chair, are authorized to substitute his facsimile signature provided he/she signs a certified list of individual checks for which his facsimile signature is authorized; also the signature plates are in the sole possession of the Treasurer.

FLUVANNA COUNTY BOARD OF SUPERVISORS
AGENDA ITEM STAFF REPORT

TAB A

MEETING DATE:	January 9, 2019				
AGENDA TITLE:	One Virginia 2021				
MOTION(s):	**N/A**				
STRATEGIC INITIATIVE?	Yes	No	**If yes, list initiative(s):**		
		X			
AGENDA CATEGORY:	Public Hearing	Action Matter	Presentation	Consent Agenda	Other
			XX		
STAFF CONTACT(S):	Steven M. Nichols, County Administrator				
PRESENTER(S):	Joe Shaver, One Virginia 2021 Representative				
RECOMMENDATION:					
TIMING:	Current				
DISCUSSION:	Presentation and request for support of the One Virginia 2021 redistricting initiative.				
FISCAL IMPACT:	None				
POLICY IMPACT:	None				
LEGISLATIVE HISTORY:	N/A				
ENCLOSURES:	Draft Resolution supporting the One Virginia 2021 initiative.				
REVIEWS COMPLETED:	Legal	Finance	Purchasing	HR	Other

Opinions

Amend Virginia's constitution to ban gerrymandering

By Ken Cuccinelli II and
Ward Armstrong
January 3 at 11:44 AM

Ken Cuccinelli II, a Republican, served as Virginia's attorney general from 2010 to 2014. Ward Armstrong, a Democrat, served in the Virginia House of Delegates from 1992 to 2012 and was House minority leader from 2007 to 2012.

As a Republican from Northern Virginia and a Democrat from rural Henry County, we've seen how redistricting has been abused by both political parties in the Virginia General Assembly. One of us, as the Democratic leader in the House of Delegates in 2011, was gerrymandered out of the seat he'd held for 20 years. The other, as the Republican attorney general, was obligated to defend that redistricting plan, despite his own reservations about it.

Now, our bipartisan committee of 10 former officeholders and election law experts has proposed an amendment to the commonwealth's constitution to put citizens' interests above partisan political interests when Virginia's election map is redrawn in 2021. The amendment would reduce, but not eliminate, the General Assembly's role in redistricting and give final authority to an independent commission of 10 qualified citizens.

In 2021, that commission would be responsible for drawing new boundaries for all 100 House of Delegates districts, all 40 Virginia Senate districts and Virginia's 11 congressional districts.

We're confident that the people of Virginia are ready to put an end to partisan gerrymandering, as voters in four states did last year. But Virginians will get that opportunity only if the General Assembly allows it. The amendment will be introduced by bipartisan sponsors in the upcoming session, but passage is far from certain. That makes this moment urgent.

To take effect in time for the redistricting that must follow the once-in-a-decade national census, this amendment must pass in the General Assembly session that begins Jan. 9. Then it must pass with no changes — not even a comma — in the session one year later. Only then can it go before voters in November 2020.

How would the amendment change the 2021 redistricting? First, because gerrymandering thrives behind closed doors and in midnight meetings, the new process would be open and transparent. Further, the amendment specifies district criteria that favor fair elections.

To ban partisan gerrymandering and incumbent protection, no district would be drawn to favor or disfavor any political party, incumbent legislator or individual.

unavoidable, mapmakers would consider boundaries such as rivers, mountains, major highways, residential subdivisions and communities of interest.

Acknowledging Virginia's history, districts would not be drawn to abridge minority communities' ability to elect representatives of their choice.

Districts would be compact and contiguous, not far-flung or disconnected.

Districts would be nearly equal in population but allowed to deviate by up to 0.5 percent for congressional districts and 5 percent for General Assembly districts. In the past, less flexible standards provided cover to distort boundaries for partisan advantage.

The 10-member commission would be chosen in a method that provides independence but recognizes the traditional role of the legislature and political parties.

First, any registered Virginia voter could apply to serve on the commission. From those applications, a panel of five retired judges would nominate five Republicans, five Democrats and 12 unaffiliated voters.

The General Assembly's influence would be exercised by the speaker and minority leader in the House of Delegates and the majority leader and minority leader in the Senate. Those four would have a say in naming the panel of judges. Subsequently, in a process modeled after jury selection, each would "strike" three candidates from the judges' nominees: one from the other party and two independents.

The result would be a commission of three Republicans, three Democrats and four independents.

We are both trial attorneys. From our personal experience with jury selection, we are convinced that this "strike" method would produce a qualified commission that would work sincerely to deliver fair districts.

As further protection against any partisan imbalance, to be adopted, a map would require seven votes, including at least one Republican and one Democrat. Once adopted, the commission's maps would be final, not subject to amendment or veto by the General Assembly or governor.

Some may ask why a constitutional amendment is required, rather than a simple change in law. Laws can be reversed by whatever party is in power, and human nature means gerrymandering will always be tempting. Embedding the process in the Virginia constitution is the best — the only — way for the people of Virginia to put this citizens-first reform beyond tampering hands.

Read more:

Peter Galuszka: Why Virginia can't draw a fair map

Justin Levitt: The fight to end partisan gerrymandering is far from over

BOARD OF SUPERVISORS
County of Fluvanna
Palmyra, Virginia

RESOLUTION No. 02 - 2019

A RESOLUTION IN SUPPORT OF REDISTRICTING REFORM IN VIRGINIA

WHEREAS, the County of Fluvanna supports redistricting reform in Virginia for state legislative and congressional districts; and

WHEREAS, the County of Fluvanna maintains that transparent and nonpartisan legislative districting is a reform essential to build more trustworthy, accountable, and healthy democracy for our state and nation; and

WHEREAS, the County of Fluvanna maintains that redistricting reform is necessary to eliminate the conflict of interest that allows General Assembly members to pick their voters; and

WHEREAS, the County of Fluvanna maintains that eliminating political data would help resolve the problem of split precincts and divided jurisdictions throughout Virginia, and

WHEREAS, action is needed now given the multi-year process required to amend the Virginia Constitution in order to institute a reformed redistricting process by the time the next redistricting occurs in 2021.

NOW, THEREFORE, BE IT RESOLVED that the County of Fluvanna fully supports and urges action to protect and promote democracy in Virginia through redistricting reform.

THE FOREGOING RESOLUTION WAS DULY AND REGULARLY ADOPTED by the Fluvanna County Board of Supervisors at the annual Organizational Meeting of the Board held on the 9th day of January, 2019;

	AYE	NAY	ABSTAIN	ABSENT	MOTION	SECOND
Mozell H. Booker, Fork Union District						
Patricia B. Eager, Palmyra District						
Anthony P. O'Brien, Rivanna District						
John M. Sheridan, Columbia District						
Donald W. Weaver, Cunningham District						

Attest:

_____
John M. Sheridan, Chair
Fluvanna County Board of Supervisors

TAB B

FLUVANNA COUNTY BOARD OF SUPERVISORS
AGENDA ITEM STAFF REPORT

MEETING DATE:	January 9, 2019
AGENDA TITLE:	PREVENTIVE MAINTENANCE AND ON-CALL REPAIR AND EMERGENCY SERVICES FOR GENERATORS
MOTION(s):	**I move the Board of Supervisors approve the Preventive Maintenance And On-Call Repair And Emergency Services For Generators Contract with GenServ, LLC, authorize the County Administrator to execute the Agreement, subject to approval as to form by the County Attorney.**

STRATEGIC INITIATIVE?	Yes	No	**If yes, list initiative(s):**	
		X		

AGENDA CATEGORY:	Public Hearing	Action Matter	Presentation	Consent Agenda	Other
		X			

STAFF CONTACT(S):	Cyndi Toler, Purchasing Officer
PRESENTER(S):	Cyndi Toler, Purchasing Officer
RECOMMENDATION:	Approve
TIMING:	Routine

DISCUSSION:

- IFB issued in October 2018
- 3 Bids were received
- GenServ LLC was the low bid
- PM Costs for all county generators, Including at all E911 Tower sites, will be $16,400 annually for quarterly preventative maintenance
- Additional charges for on call and emergency repairs:

Flat Rate Fee for Travel (per occurrence, if applicable)	$200.00
Mechanic Hourly Rate, Normal Time, 8 A.M. – 5 P.M.	$85.00
Electrician Hourly Rate, Normal Time, 8 A.M. – 5 P.M.	$85.00
Mechanic Overtime Hourly, After 5 P.M. & Holidays	$127.50
Electrician Overtime Hourly, After 5 P.M. & Holidays	$127.50

- Our prior generator service contract, signed in 2016, Only included one annual preventative maintenance visit and was a flat fee of $335 per generator
- This level of service has been inadequate as we have suffered multiple generator failures.
- Adding this additional level of service will help prevent issues in the future.

FISCAL IMPACT:	$16,400 Annually
POLICY IMPACT:	NA
LEGISLATIVE HISTORY:	NA
ENCLOSURES:	PREVENTIVE MAINTENANCE AND ON-CALL REPAIR AND EMERGENCY SERVICES FOR GENERATORS CONTRACT

REVIEWS COMPLETED:	Legal	Finance	Purchasing	HR	Other
	X		**X**		**X- Public Works**

CONTRACT BETWEEN THE COUNTYOF FLUVANNA AND GENSERV LLC FOR PREVENTIVE MAINTENANCE AND ON-CALL REPAIR AND EMERGENCY SERVICES FOR GENERATORS

This **CONTRACT FOR PREVENTIVE MAINTENANCE AND ON-CALL REPAIR AND EMERGENCY SERVICES FOR GENERATORS** (collectively with all exhibits hereto, the "Contract") dated this 12th day of December, 2018 is between The **COUNTY OF FLUVANNA** (the "County"), a political subdivision of the Commonwealth of Virginia, and GenServ, LLC ("Contractor"), a Virginia limited liability company, and is binding among and between these parties as of the date of the County's signature. The parties hereto agree as follows:

1. **PURPOSE AND EXHIBITS:** The Contractor shall provide those Preventative Maintenance Services and as-needed On-Call and Emergency Services from time to time as needed by the County so as to meet or exceed the requirements of: (i) the Invitation for Bids, Preventive Maintenance And On-Call Repair And Emergency Services For Generators issued October 11, 2018, IFB Number 2019-01, (the "**IFB**"), which IFB is attached hereto as **Exhibit 1** and made a material part of this Contract; and (ii) the Contractor's Bid in response to the IFB dated November 5, 2018 (the "**Bid**"), which Bid is attached hereto as **Exhibit 2** and made a material part of this Contract. "**Preventative Maintenance Services**" shall include: all those preventative maintenance services described in the IFB, including specifically, without limitation, in Section 2(I) of the IFB; and all those preventative maintenance services set forth in the Bid including specifically, without limitation, all those items listed on the "Preventative Maintenance Inspection" sheet. "**On-Call Services**" shall have the same meaning as defined in the IFB and shall also include emergency repair services. "Preventative Maintenance Services" and "On-Call Services" are hereinafter collectively referred to as the "**Services**". The Services must be furnished by Contractor in a good and workmanlike manner, to pass without exception in the trade, and to meet or exceed all applicable industry standards and any requirements of the IFB and the Bid.

2. **SCOPE OF WORK:** Section 2 of the IFB sets out in detail the scope of work for the Services including the requirements and obligations of Contractor related to performing the Services. Section 2 of the IFB is hereby incorporated into this Contract by reference as material terms hereof and to the extent any language of this Contract or Exhibit 2 directly conflicts with the same, Section 2 of the IFB shall control and bind the parties.

3. **SCOPE OF PREVENTIVE MAINTENANCE SERVICES:** Contractor agrees to provide the Preventive Maintenance Services during the Coverage Dates (defined below in Section 6) related to the County's Generators (defined in Section 4 below). The Contractor agrees to provide Preventive Maintenance Services to the County for maintenance of its Generators. The following additional conditions apply to performance of the Services:

   Guaranteed 2-hour response 24 hours/day, 7 days/week, 365/year;
   Emergency service labor and travel coverage;

Parts coverage; and
Preventive Maintenance visits scheduled Monday-Friday, 8 am – 5 pm.

4. **THE COUNTY'S GENERATORS:** The County's Generators (the "Generators") which will be serviced under this Contract by Contractor include the following generators: all those 22 generators shown on that "List of Generators/Pricing Schedule" attached to and a part of Exhibit 2, the Bid.

   If any of the above-referenced Generators fail during the coverage dates or any extension thereof under this Contract, the County shall have the option to either: (i) replace the Generator with the same or similar Generator (the "replacement Generator") and Contractor shall be responsible for meeting all the requirements of this Contract with respect to such replacement Generator as if it were the original Generator at no additional cost or expense to the County; or (ii) the County may choose not to replace the Generator and the Contract price shall be reduced pro ratably to reflect the removal of such specific Generator. In addition, if any Generator failure is caused by Contractor's failure to maintain the Generators in conformance with this Contract or Contractor's willful act or negligence, then Contractor shall replace the Generator at its sole cost and expense with a new replacement Generator of equal or better quality than the failed Generator. Generators as used herein will mean those generators in service at the time, from time to time.

5. **ON-CALL REPAIR SERVICES:** The Contractor will also provide on-call as-needed and emergency generator repair services for the Generators in accordance with this Contract (the "On-Call Repair Services") as described in the IFB, with specific reference to Section 2(J) and 2 (K). Nothing herein shall require the County to use Contractor for any On-Call Repair Services and any On-Call Repair Services shall be completed only at the written request of the County in its sole discretion. All the requirements for the On-Call Repair Services must be met including, without limitation, execution of a valid Purchase Order prior to completion of the Services. If the Contractor fails to strictly comply with Section 2 in performing any Services under this Contract, the Contractor shall do so at its own risk and the County is not obligated to pay the Contractor for such Services not performed pursuant to a valid Purchase Order or not meeting all such requirements. For On Call Repair Services, the Contractor will be paid based on invoices submitted. Invoices shall include the following: the contract number, purchase order number, work authorization, copies of supplier invoices or inventory list for materials used for project, and total amount due. Invoices shall be submitted to the County only after completion of the work for that purchase order to the sole satisfaction of the County. Payment will be made in accordance with Section7 below.

6. **COVERAGE DATES:** A one-year term beginning on the 1st day of January, 2019 at 12:01 a.m. and continuing for one-full year. The County shall have the option to renew this Contract for two (2) additional one (1) year terms in the County's sole discretion beginning immediately upon the termination of the prior annual term. Such renewal shall be automatic. If the County

elects not to renew this Contract it will notify the Contractor prior to the end of the current annual term. The initial term and any renewal terms are the "Coverage Dates".

7. **PRICING:** The total annual price per Generator for the Preventive Maintenance Services for the Coverage Dates shall be as set forth in the "List of Generators/Pricing Schedule" in the Bid for a total Preventative Maintenance Cost annually of SIXTEEN THOUSAND FOUR HUNDRED AND NO/100 DOLLARS ($16,400.00) payable within 45 days' of execution of this Contract by the County. If this Contract is terminated for any reason prior to the expiration of the current coverage year, the County shall receive a pro-rata reimbursement from Contractor of the total Preventive Maintenance Services cost hereunder based on the number of days left in the coverage year for which services will not be provided by reason of such termination. If this Contract is terminated by the County for any reasons prior to the County paying the Contractor the annual payment for Preventive Maintenance Services, the County shall pay the Contractor a pro-rata portion of the annual payment based on the number of days of services were actually rendered to the County by the Contractor prior to said termination.

   The County shall pay the Contractor for all On-Call Repair Services & Emergency repair services based on the following rates:

   i. $85.00 per hour for a mechanic or electrician during regular business hours of Monday through Friday 8 a.m. to 5 p.m.; or
   ii. $127.50 per hour for a mechanic or electrician overtime rate for services completed after-hours (after 5 p.m.) or on Holidays (federal only).
   iii. An additional $200.00 flat fee for travel may apply (per occurrence, if applicable)

   Notwithstanding the foregoing, any work under this Contact to be completed at overtime or holiday rates must be specifically approved in advance by the County in the applicable Purchase Order signed by the County. Unless specifically indicated otherwise in a purchase order, it is understood that all Services under this Contract are to be completed during regular business hours. Any overtime or holiday work not approved by the County in a purchase order in advance with specific reference shall be billed to the County at a rate of $85.00 per hour.

   All On-Call Repair Services work shall be billable to the County in increments of a quarter of an hour or smaller increment if that is the standard practice of the Contractor. The minimum charge shall be a quarter of an hour or smaller increment if that is the standard practice of the Contractor.

   Any materials, parts, or other reimbursable items for the Services shall be invoiced at cost without mark-up of any kind.

   Any payments shall be made in accordance with this Contract and Section 47 "Payment" of the General Terms, defined below in Section 9, and in no event shall Contractor be paid prior to the Completion Date. The date that all services and work related to or

necessary for completion of any On-Call Repair Services task is installed, operational and in full compliance with this Contract, to the sole satisfaction of the County is the "**Completion Date**". Notwithstanding the foregoing, the Preventative Maintenance Services are paid for in advance as set forth above.

8. **NOTICES:** The legal address for the County and for the Contractor and the addresses for delivery of Notices and other documents related to the administration of this Contract are as follows:

   ATTN: Ms. Cyndi Toler
   County of Fluvanna
   P.O. Box 540
   Palmyra, VA 22963
   Telephone: (434) 591-1937
   Facsimile: (434) 591-1911
   Email: ctoler@fluvanna.org

   With a Copy to:
   Fluvanna County Attorney
   Attn: Kristina M. Hofmann, Assistant County Attorney
   414 East Jefferson Street
   Charlottesville, VA 22902

   Contractor:
   GenServ LLC
   Attn: David T. Fretwell
   81 Vance Lane
   Stuarts Draft, VA 24477
   Phone: (540) 337-1928
   Fax: (540) 337-1928
   Cell: (540) 414-3491

9. **ADDITIONAL TERMS:** The County of Fluvanna General Terms, Conditions and Instructions to Bidders and Contractors (the "General Terms") are attached the IFB and incorporated herein by reference and made a material part of this Contract. Where any of the provisions of the General Terms conflicts with any of the provisions of this Contract, this Contract shall control.

In witness hereof the undersigned duly authorized representatives have executed this Contract on the dates set forth beside their respective signatures:

Contractor:
GenServ LLC

By: _____ Date: 12/13/18

Name: David T. Fretwell

Title: Owner

County:
County of Fluvanna, a political subdivision of the Commonwealth of Virginia

By: _____ Date: _____

Name: _____

Title: _____

APPROVED AS TO FORM:

_____
Fluvanna County Attorney

COUNTY OF FLUVANNA, VIRGINIA
Invitation for Bid (IFB) #2019-01
PREVENTATIVE MAINTENANCE AND ON-CALL REPAIR AND EMERGENCY SERVICES FOR GENERATORS
Issue Date: Oct 11, 2018
Due Date: Nov 8, 2018 at 2 p.m. EST

Procurement & Technical Contact:
County of Fluvanna
Cyndi Toler, Purchasing Officer
132 Main Street
P.O. Box 540
Palmyra, VA 22963
Ph: (434) 591-1930 ext. 1124
Email: ctoler@fluvannacounty.org

All sealed bids shall be turned in no later 2:00 p.m. EST, Thursday, November 8, 2018. All bids that are delivered via mail or are hand delivered must be addressed to the "Procurement Contact" listed above. Any Bids that are turned in late will be rejected and returned unopened. Any Bids sent in via facsimile, telephone, or email shall not be considered.

Bid documents may be picked up at the Fluvanna County Department of Finance located at 132 Main Street, 2nd floor, Palmyra, VA 22963 or by clicking on the following link: http://www.fluvannacounty.org/services/finance/procurement/solicitations.

1. GENERAL INFORMATION

A. By this Invitation for Bids ("IFB"), the Fluvanna County Board of Supervisors (hereinafter the "County") is seeking competitive sealed bids from qualified licensed contractors (herein referred to interchangeably as "Contractor" or "Bidder") to furnish Preventative Maintenance and On-Call Repair and Emergency Repair and related services for Generators in the County of Fluvanna.

A. Any inquiries or requests for clarification or additional information must be delivered in writing (via email) to the County no later than October 25, 2018 by 2:00pm to the following email address: ctoler@fluvannacounty.org. All inquiries will be answered via an addendum, posted to eVA and the County website.

2. SCOPE OF WORK:

A. The Contractor shall furnish all labor, supervision, equipment, tools, parts, materials, work, services and incidentals as necessary to maintain all generators listed in Exhibit 1 (each a "Generator" and collectively the "Generators"), repair and trouble-shoot the Generators described herein in accordance with the best practices, the original manufacturer's design specifications, operational efficiencies and capacities, and as more specifically set forth in this Section 2 (the "Work" or "Services").

B. Work shall include providing quarterly preventive maintenance services and as needed on-call repair services to include emergency repair services for the Generators. If any of the above-referenced Generators fail during the term of any contract under this IFB or any extension thereof, the County shall have the option to either: (i) replace the Generator with the same or similar generator and Contractor shall be responsible for meeting all the requirements of this Contract

with respect to such replacement generator as if it were the original Generator at no additional cost or expense to the County; or (ii) the County may choose not to replace the Generator and the Contract price shall be reduced pro ratably to reflect the removal of such specific Generator. In addition, if any Generator failure is caused by Contractor's failure to maintain the Generators in conformance with this Contract or Contractor's willful act or negligence, then Contractor shall replace the Generator at its sole cost and expense with a new replacement Generator of equal or better quality than the failed Generator.

C. By responding to this IFB, Contractor certifies that the mechanics/electricians assigned to perform the repairs and preventative maintenance for the term of the contract resulting from this IFB are qualified by experience and training to perform such repairs and maintenance in accordance with Original Equipment Manufacturer ("OEM") requirements and best trade practices. The County reserves the right to review any Contractor training, licensure, or certification documentation upon request and the County reserves the right to reject any of Contractor's employees not competent to perform the duties required.

D. Contractor shall comply with applicable local, state and federal laws, rules, requirements and similar regulations or guidance ("Applicable Law") while performing work.

E. Contractor shall review safety plans with County prior to beginning any work and shall report any safety concerns, near misses, accidents and injuries related to the work area to the County immediately.

F. Contractor shall coordinate all work with the County to minimize site disturbance.

G. Contractor shall replace or repair any defective installation or manufacturer's defect within one (1) year from County's acceptance of completed Work at no additional cost (a "warranty repair"). This shall apply to all Services performed by the Contractor under this Contract.

H. Contractor shall clean up after any Work and leave site in an orderly condition.

I. **PREVENTIVE MAINTENANCE:**

   i. The Contractor shall perform preventive maintenance on a date mutually agreeable with the County. Preventative Maintenance service as used in the contract resulting from this IFB shall consist of semiannual preventative maintenance as recommended by the manufacturer of the Generators which shall include, but is not limited to:

      1. Electrical system AC & DC: all cables shall be checked, cleaned and tightened; batteries shall be checked for correct specific gravity and distilled water added; external battery charger and/or battery charging alternator shall be inspected and tested for proper operation; terminations, control panel, control components, warning systems and emergency shutdowns shall be checked for proper operation;
      2. Batteries: check condition and specific gravity from positive end, check water; check battery terminals and clamps, charger operation and voltage.
      3. Fuel system: Check for water, trash and sludge; inspect system for leaks and repair minor leaks; all fuel filters must be replaced as required or at least once a year.
      4. Lube oil system: check oil level, governor reservoir level, and record engine oil pressure, flush and refill as needed; inspect system for leaks (and repair minor leaks), change lube oil and filters per manufacturer's recommendation; dispose of used oil in accordance with EPA requirements; all lube oil heaters shall be checked to ensure proper operation.
      5. Cooling System: check air flow, ventilation and cooling, inspect system for leaks (and repair minor leaks) and test coolant for proper antifreeze mixture and level; all hoses, hose clamps, belts and jacket water heater connections must be inspected; DCA additive water filters shall be changed at 6 month intervals; city water cooled and heat exchanger systems must be inspected for leaks and must be checked for proper operations; all air-cooled sets, cooling fins, fans, shrouds,

etc. shall be inspected, cleaned and checked for proper operation. Check water temperature.

6. Air System: inspect complete air intake and exhaust systems including louver/shutters for correct operation whenever Generators are running either in manual or automatic mode; inspect and clean all air filters and replace as needed.
7. Exhaust System: check exhaust system for security water and leaks (and repair minor leaks); open and drain condensation traps; check for any exhaust restrictions; inspect system for leaks; check all mounting hardware and tighten as required; check rain cap for proper operation when engine is running and stopped.
8. Generator Set: manually operate Generator and verify that Generator is producing rated AC voltage and frequency and all control panel instruments and gauges are functioning, adjust as needed; units shall be checked for any unusual engine or Generator noise and water, oil and exhaust leaks; Contractor shall coordinate with the Director or designee for work to be done during regular testing; coordination must be done for load testing.
9. Transfer Switch: inspect and test transfer switch to ensure that it automatically starts the Generator and is transferring properly, clean and lubricate, check sensors and contacts, plus all options such as “time delay cool down,” “plant exerciser,” etc., are performing in accordance with the County and manufacturer’s requirements.
10. General – Contractor shall grease all necessary fittings; visually inspect vibration isolators, duct work, weatherproof enclosures, worn and/or rubbing parts and components.
11. Radiator: check for rust, water level and condition of cap.
12. Check and lubricate all bearings and linkage.
13. Clean slip rings and brushes.
14. Check Starter Motor for operation.
15. Engine: Check safety shut-downs, high engine temperature, low oil pressure, engine over speed, engine cranking termination, and low engine temperature alarms.
16. Diesel engine: check fuel system, lines, injectors, pump, and operation.
17. Gas/Gasoline Engine: check and adjust points, plugs, timing, fuel pressure, mixture, cap and rotor.
18. Check meters for operation and calibration, adjust as needed.
19. Check Generator function by simulating a power outage, with specific permission from the County.
20. Check operation of Generator system for smoothness and proper timing of all timers, including exerciser, relays and contractors, etc.
21. Once per year the Contractor must visually inspect the contactors on the transfer switch for wear and alignment for each Generator. Contractor shall notify County one month in advance of its intention to perform this procedure so the affected housing units may be notified in advance of the shutdown of the electrical systems for the housing units.
22. Contractor shall furnish at no additional cost all consumable supplies such as oil filters, air filters, antifreeze and other consumables as required by manufacturer’s/trade requirements to provide an effective preventative maintenance.

ii. The Contractor shall maintain a preventive maintenance inspection/service log on each Generator. The logs shall indicate the equipment inspection schedule; the date last scheduled inspection/service was performed, noted deficiencies, completed preventive maintenance inspection/service checklists and any other pertinent information. For

example: General Condition, model and location of Generators. The County shall receive copies of the logs at minimum annually.

J. **ON-CALL REPAIR SERVICES:** The Contractor will also provide on-call as-needed generator repair services in accordance with this Contract (the "On-Call Repair Services"). Nothing herein shall require the County to use Contractor for any On-Call Repair Services and any On-Call Repair Services shall be completed only at the written request of the County in its sole discretion. The following are requirements for the On-Call Repair Services:

i. The Contractor shall prepare and submit to the County, a written estimate of the man-hours and materials (a "purchase order"), which may be required to perform repairs that are not covered under the preventive maintenance service ("On-Call Repair Services"). NOTE: These repairs may only be made with the County's prior written authorization.

ii. The Contractor shall accept all County purchase orders and each purchase order will include a timeline for completion of specified tasks and the total not to exceed cost based on the County accepted project estimate. The County's purchase order must be signed by an authorized representative of the County. The Contractor shall have no claim for compensation greater than the approved amount in the purchase order. The Contractor shall obtain prior written approval for any work that exceeds the work authorization in purchase order. No compensation or reimbursement of any kind will be owed to Contractor for services outside the scope of a purchase order.

iii. The Contractor's hourly rate includes all incidental costs, including allowances for profit and tools of the trade. No travel time to and from a job site shall be included in the work performed, hourly costs invoiced shall include time at the job site only. Compensation for materials purchased for the work shall be based on the actual cost paid for the item. All costs shall be included in the purchase order and receipts showing vendor purchased, date, description and cost are required for material reimbursement. For multi-day projects, the County reserves the right to request that a daily log be submitted which includes details concerning the completed work, labor, materials and costs.

iv. The Contractor will be paid on the basis of invoices submitted. Invoices shall include the following: the contract number, purchase order number, work authorization, copies of supplier invoices or inventory list for materials used for project, and total amount due. Invoices shall be submitted to the County only after completion of the work for that purchase order to the sole satisfaction of the County. Payment will be made forty-five (45) days after receipt of a proper invoice, or forty-five (45) days after receipt of all goods or acceptance of work, whichever is later.

v. Repairs necessitated by vandalism, accident or obsolescence of equipment shall be accomplished on a time and materials basis.

K. **WORKING HOURS ON CALL AND EMERGENCY REPAIRS:**

i. Normal work hours for the Fluvanna County Offices are from 8:00 A.M. to 5:00 P.M. Monday through Friday except for County observed holidays. All preventive maintenance service shall be performed during normal working hours and shall occur at a date and time agreed upon by the County and the Contractor in advance. On Call As-Needed repairs found during the routine inspection may be done on the same day after approval from the Director of Public Works or his designee on a time and materials basis using labor rates established in the pricing Schedule on the bid form and the Contractor's actual charges paid for materials.

ii. Any Work under this Contact to be completed at overtime or holiday rates must be specifically approved in advance by the County in the applicable purchase order signed by the County. Unless specifically indicated otherwise in a purchase order, it is understood that all Services under this Contract are to be completed during regular business hours. Any overtime or holiday work not approved by the County in a purchase order in advance with specific reference shall be billed to the County at the regular rate.

iii. The Contractor agrees that for repairs deemed an emergency by the County it has a guaranteed response time of 4 hours or less 24 hours a day, 7 days a week.

iv. All On-Call Repair Services work shall be billable to the County in increments of a quarter of an hour or smaller increment. The minimum charge shall be a quarter of an hour or smaller increment.

v. Any materials, parts, or other reimbursable items for the Services shall be invoiced at cost without mark-up of any kind.

vi. In the event the County notifies the Contractor of a Generator malfunction or failure, the Contractor shall contact the County within two (2) hours to schedule repair.

vii. In the event preventive maintenance service was performed within 7 calendar days prior to an emergency call/notification, and the call/notification was not due to accident, vandalism, abuse, or power failure, the contractor will make repairs at no cost to the County.

L. **CONTRACTOR'S GENERAL PROCEDURES:**

i. The Contractor's employees shall be instructed that all work performed under the contract resulting from this IFB shall comply with the following procedures:

1. Check in and out with the County representative at each visit. The County representative shall record the date(s) and time(s) Contractor's employees arrive and leave, noting time away from County, such hours will not be approved for payment.
2. If a Generator must be taken out of service to perform any work, the County representative shall be notified immediately and provided with the information as to how long the Generator is anticipated to be out of service and nature of the service or repairs to be performed.
3. Upon completion of all work and prior to departure, submit to the County representative a copy of the work/service report, which shall include the following information:
    a. Work/Service Report for Preventive Maintenance:
        i. Name and address of Contractor
        ii. Name of Contractor's employee in charge of work, signature of the employee and the date of service
        iii. A list of materials used or parts replaced.
        iv. Noted deficiencies
        v. A completed preventive maintenance checklist chart shall be attached to each work/service report.
    b. Work/Service Report for Repairs (On call and emergency):
        i. Name and address of Contractor
        ii. Name of Contractor's employee in charge of work and signature of the employee
        iii. Date(s) and number of hours, by type of labor expended to perform the work (these hours must agree with maintained by the County representative).
        iv. Brief description of work performed noting materials used or parts replaced.
        v. Noted deficiencies
        vi. Work/Service report form shall have a statement that shall be signed by the County's representative that the man hours reported are accurate and that the work listed was performed.

ii. Hours for work performed on a time and material basis under the contract resulting from this IFB shall be paid only for productive time on the job site. The hours of billable work commence when the Contractor's employee(s) arrive. Time spent for transportation of

workers, material acquisition, handling and delivery of Contractor owned or rental equipment and breaks for lunch or other time the employees are away from the job site is not chargeable.

M. **MATERIAL AND WORKMANSHIP:**

i. All parts furnished under the contract resulting from this IFB shall be OEM new parts. The County, on a case by case basis, may authorize use of manufacturer's rebuilt parts, provided each part is warranted for approximately the same period and under the same conditions as the new part. Use of used parts is strictly prohibited.

ii. The Contractor shall maintain a sufficient quantity of repair parts on hand or have ready access to these parts in order to prevent unnecessary downtime of equipment.

iii. The Contractor shall guarantee all parts and workmanship for a period of thirty (30) days or the manufacturer's warranty period, whichever is longer. Repeated calls for repairs for the same reason or problem within this period shall be made at no cost to the County.

iv. The cost of repair parts or parts sold as "stock" shall be billed at the actual price paid by the Contractor to the manufacturer or distributor to include any freight, insurance and taxes. All invoices submitted to the County for payment shall include an attached copy of the Contractor's paid invoice for the part(s). The paid invoice shall contain the distributor's name, address and the line item description and amount paid by the Contractor for the part.

3. SUBMITTAL INSTRUCTIONS

A. The County will not be responsible for any expenses incurred by a firm in preparing and submitting a Bid. All Bids shall provide a straight-forward, concise delineation of the firm's capabilities to satisfy the requirements of this IFB. Emphasis should be on completeness and clarity of content. The contents of the Bid submitted by the successful Bidder and this IFB, and any amendments thereto, will become part of any contract awarded as a result of this IFB.

B. The format of each bid must contain the following elements organized into separate chapters and sections, as the Bidder may deem appropriate. The following paragraphs provide guidelines to each Bidder for information to include in the bid document:

C. **Cover Letter** - Provide a cover letter that confirms the Bidder's understanding of this IFB, a general understanding of the Project, an overview of the history and qualifications of the firm.

D. **Overview** - The purpose of this section is to provide Fluvanna County with an overview of the history, qualifications and abilities of the Contractor's firm and for the Contractor to demonstrate the specific qualifications of the staff the Contractor will assign to this Project if selected. At a minimum, the proposal should: (i) Designate a Project Manager and indicate office location; and (ii) Include the organization chart, functional discipline, and responsibilities of Project team members.

E. **Demonstrated History of Successful Projects** - Discuss recent project information of similar type to the Project completed by the firm including the project name, location, brief description of the project, description of the scope of services provided, and principal contact person. List all work of a similar nature to the Project completed for any department or County of the Commonwealth of Virginia and any Virginia public body or locality.

F. **Proposed Sub-Consultants** - The Contractor shall clearly state whether it is proposing to subcontract any of the work herein. The names of all proposed sub-contractors shall be provided. By proposing such firm(s) or individuals, the Contractor assumes full liability for the sub-consultant's performance. The Contractor shall state the amount of previous work experience with the sub-consultant(s).

G. **References:** Provide the current name, address, and telephone number of at least five (5) references the Contractor has served either currently or in the past three (3) years; preferably those where one or more of the Project team members provided the same or similar services as requested herein. Indicate the Scope of Services provided to each reference.

H. **Pricing –** Please complete Pricing Schedule on Exhibit 1

I. **Forms:** All forms required to be submitted under this IFB must be included in the Bid.
   i. Vendor Data Sheet (Attachment A)
   ii. Proof of Authority to Transact Business in Virginia (Attachment B)
   iii. Certificate of No Collusion (Attachment C)
   iv. Bidder Statement (Attachment D)

J. The County is not responsible for failure to locate, consider and evaluate qualification factors presented outside this format.

K. Any information thought to be relevant, but not applicable to the enumerated scope of work, should be provided as an appendix to the bid. If publications are supplied by the Officer to respond to a requirement, the response should include reference to the document number and page number. Bids not providing this reference may be considered to have no reference material included in the additional documents.

L. The County is not responsible for failure to locate, consider and evaluate qualification factors presented outside this format.

4. SUBMITTAL INSTRUCTIONS

A. **Each Bidder must submit one (1) original and two (2) copies along with one (1) electronic copy of its bid documents on CD ROM, DVD, or USB flash drive/memory stick.**

B. An authorized representative of the Bidder shall sign bid documents. All information requested should be submitted. Failure to submit all information requested may result in the bid being rejected by the County.

C. All forms attached to this IFB must be fully completed, executed by the Bidder and returned as a part of Offer's Bid.

D. **Each bid shall be in writing and received in hard copy by the deadline. Oral bids, bids received by telephone, fax, telegraph, or email shall be rejected.**

5. CONTRACT AWARD:

A. The contract will be awarded to the lowest responsible and responsive bidder whose bid, conforming to this IFB, is most advantageous to the County, considering price and any other evaluation criteria set forth in the bid documents and consistent with the Virginia Procurement Act, the County's Code, the County's Procurement Policies and Procedures and other applicable law. Nothing herein requires that the County complete this Work and the County may determine not to award any Contract pursuant to this IFB in its sole discretion for any reason or no reason at all.

B. BID EVALUATION PROCEDURE: Bids shall be evaluated on a total-sum for all items listed: semiannual preventative maintenance cost, hourly rates, and the Flat Rate Travel Fee as specified by the bidder in Exhibit 1's Pricing Schedule. The low bidder shall be determined by the following hypothetical quarterly scenario:

NOTE: The Bidder is not to fill in these blanks. This example is only intended to show the procedure which will be utilized.

1. *Quarterly PM for Generators in Exhibit 1 $_____ / Quarterly*
2. *36 Hours (On Call/Emergency Repairs) Mechanic: $_____/hr.$_____*
3. *18 Hours (On Call/Emergency Repairs) Electrician: $_____/hr. $_____*
4. *3 Hours (Overtime Labor) Mechanic: $_____/hr. $_____*
5. *3 Hours (Overtime Labor) Electrician: $_____/hr. $_____*
6. *12 each Flat Rate Fee For Travel (Roundtrip) for On-Call & Emergency Repairs Only: $_____ / per Round trip $_____*
7. *Total cost of items 1 + 2 + 3 + 4 + 5 + 6= $_____*

6. TERMS

A. The County's General Terms, Conditions, and Instructions to Bidders and Contractors are attached hereto and incorporated herein by reference as Appendix I. These provisions bind all Bidders. Further, the conditions and requirements of this IFB, including, but not limited to,

County's General Terms, Conditions, and Instructions to Bidders and Contractors, are a material part of any contract awarded between the County and the successful Bidder(s).

B. Awards shall be made to as many Bidders as deemed necessary to fulfill the anticipated requirements of the County. The County may award contracts to multiple Bidders and use their services for some or all of the projects identified herein. The County may choose not to award a contract or Notice to Proceed for any or all projects described herein.

C. Pursuant to Virginia Code 2.2-4302.2, a resulting contract under this IFB is limited to a term of one (1) year and shall be renewable for two (2) additional one-year terms at the County's sole discretion, or when the cumulative total project fees reach the maximum authorized in this section, whichever occurs first. The sum of all Work under a resulting Contract performed in a one-year contract term shall not exceed $5 million; and an individual purchase order cannot exceed $500,000. Any amounts unused from one contract term shall not be carried forward. Order splitting with the intent of keeping a purchase order under the maximum set forth supra is prohibited.

VENDOR DATA SHEET

Note: The following information is required as part of your response to this solicitation. Failure to complete and provide this sheet may result in finding your bid nonresponsive.

1. Qualification: The vendor must have the capability and capacity in all respects to satisfy fully all of the contractual requirements.

2. Vendor's Primary Contact:
Name: _____ Phone: _____

3. Years in Business: Indicate the length of time you have been in business providing this type of good or service: _____ Years _____ Months

4. Vendor Information:
FIN or FEI Number: _____ If Company, Corporation, or Partnership
SSN: _____ (If Vendor is a sole proprietor)
5. Indicate below a listing of at least four (4) current or recent accounts, either commercial or governmental, that your company is servicing, has serviced, or has provided similar goods. Include the length of service and the name, address, and telephone number of the point of contact.

Company:	Contact:
Phone:	Email:
Dates of Service:	$$ Value:

Company:	Contact:
Phone:	Email:
Dates of Service:	$$ Value:

Company:	Contact:
Phone:	Email:
Dates of Service:	$$ Value:

Company:	Contact:
Phone:	Email:
Dates of Service:	$$ Value:

By my signature below, I, as a duly authorized representative of the entity named below, certify the accuracy of the foregoing information:

_____ Date: _____
Legal Name of Entity if Applicable

By: _____ (SEAL) Print Name: _____
Signature of Authorized Representative
Print Title: _____

Vendor Certification (for a Sole Proprietor):

_____ (SEAL) Print Name: _____ Date: _____
Signature

PLEASE RETURN THIS PAGE WITH PROPOSAL SUBMISSION – [REQUIRED]

PROOF OF AUTHORITY TO TRANSACT BUSINESS IN VIRGINIA

THIS FORM MUST BE SUBMITTED WITH YOUR PROPOSAL/BID. FAILURE TO INCLUDE THIS FORM MAY RESULT IN REJECTION OF YOUR PROPOSAL/BID

Pursuant to Virginia Code §2.2-4311.2, an Offeror/Bidder organized or authorized to transact business in The Commonwealth pursuant to Title 13.1 or Title 50 of the Code of Virginia shall include in its proposal/bid the identification number issued to it by the State Corporation Commission ("SCC"). Any Offeror/Bidder that is not required to be authorized to transact business in the Commonwealth as a foreign business entity under Title 13.1 or Title 50 of the Code of Virginia or as otherwise required by law shall include in its proposal/bid a statement describing why the Offeror/Bidder is not required to be so authorized. Any Offeror/Bidder described herein that fails to provide the required information shall not receive an award unless a waiver of this requirement and the administrative policies and procedures established to implement this section is granted by the County Administrator, as applicable. If this quote for goods or services is accepted by the County of Fluvanna, Virginia, the undersigned agrees that the requirements of the Code of Virginia Section 2.2-4311.2 have been met.

Please complete the following by checking the appropriate line that applies and providing the requested information. ***PLEASE NOTE: The SCC number is NOT your federal ID number or business license number.***

A._____ Offeror/Bidder is a Virginia business entity organized and authorized to transact business in Virginia by the SCC and such vendor's Identification Number issued to it by the SCC is _____.

B._____ Offeror/Bidder is an out-of-state (foreign) business entity that is authorized to transact business in Virginia by the SCC and such vendor's Identification Number issued to it by the SCC is _____.

C._____ Offeror/Bidder does not have an Identification Number issued to it by the SCC and such vendor is not required to be authorized to transact business in Virginia by the SCC for the following reason(s):
Please attach additional sheets if you need to explain why such Offeror/Bidder is not required to be authorized to transact business in Virginia.

Legal Name of Company (as listed on W-9): _____

Legal Name of Offeror/Bidder: _____
Date: _____
Authorized Signature: _____
Print or Type Name and Title: _____

PLEASE RETURN THIS PAGE WITH PROPOSAL SUBMISSION – [REQUIRED]

CERTIFICATE OF NO COLLUSION:

The undersigned, acting on behalf of _____, does hereby certify in connection with the procurement and proposal to which this Certificate of No Collusion is attached that:

This proposal is not the result of, or affected by, any act of collusion with another person engaged in the same line of business or commerce; nor is this proposal the result of, or affected by, any act of fraud punishable under Article 1.1 of Chapter 12 of Title 18.1 of the Code of Virginia, 1950, as amended (18.2-498.1 et seq.).

The undersigned declares that the person or persons signing this proposal is/are fully authorized to sign the proposal on behalf of the firm listed and to fully bind the firm listed to all conditions and provisions thereof.

Respectfully submitted this _____ day of _____, 2015.

_____
Legal Name of Entity

By: _____ (SEAL)
Signature of Authorized Representative

Print Name: _____

Print Title: _____

Date: _____

ACKNOWLEDGEMENT

State of _____
In the County/City of _____, **to-wit:**

The foregoing Certification of No Collusion was subscriber and sworn to before me by_____ (Print Name), _____ (Print Title) on behalf of _____ (Print Name of Entity) on this _____ day of _____ (month), _____ (year).

_____
Notary Public

My commission expires: _____

Registration Number: _____
_____

PLEASE RETURN THIS PAGE WITH PROPOSAL SUBMISSION – [REQUIRED]

OFFEROR STATEMENT

The undersigned Offeror hereby certifies that the Offeror has carefully examined all instructions, plans, conditions, specifications and other documents or items of this Request for Proposal and hereby submits this Proposal pursuant to such instructions, plans, conditions, specifications and other documents or items.

Complete if Offeror is an Entity:

WITNESS the following duly authorized signature and seal:

Name of Entity: _____
By: _____ (SEAL)
Signature
Print Name: _____
Print Title: _____

STATE OF _____
COUNTY/CITY OF _____, to-wit:

The foregoing instrument was acknowledged before me this ___ day of _____ (month), _____ (year) by _____(Print Name), _____(Print Title) on behalf of _____ (Name of Entity).

_____ [SEAL]
Notary Public
My commission expires: _____
Notary registration number: _____

Complete if Offeror is a Sole Proprietor:

Witness the following signature and seal:

_____ (SEAL)
Signature
Print Name: _____

STATE OF _____
COUNTY/CITY OF _____, to-wit:

The foregoing instrument was acknowledged before me this ___ day of _____ (month), _____ (year) by _____ (Print Name), a sole proprietor.

_____ [SEAL]
Notary Public
My commission expires: _____
Notary registration number: _____

PLEASE RETURN THIS PAGE WITH PROPOSAL SUBMISSION – [REQUIRED]

Appendix I

COUNTY OF FLUVANNA

GENERAL TERMS, CONDITIONS AND INSTRUCTIONS TO BIDDERS AND CONTRACTORS

GENERAL TERMS, CONDITIONS AND INSTRUCTIONS TO BIDDERS AND CONTRACTORS

These General Terms, Conditions and Instructions to Bidders and Contractor (hereinafter referred to as the "General Conditions") shall apply to all purchases and be incorporated into and be a part of each Solicitation (as defined below) and every Contract (as defined below) awarded by Fluvanna County, a political subdivision of the Commonwealth of Virginia (hereinafter referred to as the "County") unless otherwise specified by the County in writing. Bidders, Offerors and Contractors or their authorized representatives are expected to inform themselves fully as to these General Conditions before submitting Bids or Proposals to and/or entering into any Contract with the County: failure to do so will be at the Bidder's/Contractor's own risk and except as provided by law, relief cannot be secured on the plea of error.

Subject to all Federal, State and local laws, policies, resolutions, regulations, rules, limitations and legislation, including the County's Procurement Policies and Procedures, Bids or Proposals on all Solicitations issued by County will bind Bidders or Offerors, as applicable, and Contracts will bind Contractors, to all applicable terms, conditions, instructions, rules and requirements herein set forth unless otherwise SPECIFICALLY set forth by the County in writing in the Solicitation or Contract. All provisions of these General Conditions are material to any contract between the County and a Contractor.

INTRODUCTION

1. **VIRGINIA PUBLIC PROCUREMENT ACT AND ETHICS IN PUBLIC CONTRACTING:** The Virginia Public Procurement Act of Virginia Code §§ 2.2-4300 *et seq.* (hereinafter the "VPPA") is incorporated herein by reference. Nothing in these General Conditions is intended to conflict with the VPPA and in case of any conflict, the VPPA controls. Specifically, the provisions of Article 6 of the VPPA (Virginia Code §§ 2.2-4367 through 2.2-4377) relating to ethics in contracting, shall be applicable to all Solicitations and Contracts solicited or entered into by the County. By submitting their Bids or signing any Contract, all Bidders and Contractors certify that they have not violated any of the provisions of Article 6 of the VPPA, including, but not limited to, that their Bids are made without collusion or fraud and that they have not offered or received any kickbacks or inducements.

2. **DEFINITIONS:** The definitions of Virginia Code §§ 2.2-4301, 2.2-4302.1 and 2.2-4302.2 are specifically incorporated herein by reference and as used in these General Conditions, whether capitalized or not, any of such defined terms have the same meaning as such terms have under the VPPA: such defined terms include: "Affiliate", "Best Value", "Business", "Competitive Negotiation", "Competitive Sealed Bidding", "Construction", "Construction Management Contract", "Design-Build Contract", "Employment Services Organization", "Goods", "Informality", "Job Order Contracting", "Multiphase Professional Services Contract", "Nonprofessional Services", "Potential Bidder or Offeror", "Professional Services", "Public Body", "Public Contract", "Responsible Bidder or Offeror", "Responsive Bidder", "Reverse Auctioning" and

"Services". Additionally, as used in these General Conditions, the following terms, whether capitalized or not, have the following meanings:

a. Bid/Proposal: The offer of a Bidder or Offeror to provide specific Goods or Services at specified prices and/or other conditions specified in the Solicitation. The term "Bid" is used throughout these General Conditions and where appropriate includes the term "Proposal" or any modifications or amendments to any Bid or Proposal.

b. Bidder/Offeror/Vendor: Any individual(s), company, firm, corporation, partnership or other organization bidding or offering on any Solicitation issued by the County and/or offering to enter into Contracts with the County. The term "Bidder" is used throughout these General Conditions and where appropriate includes the term "Offeror" and/or "Vendor".

c. Contract: Any contract to which the County will be a party.

d. Contractor: Any individual(s), company, firm, corporation, partnership, or other organization to whom an award is made by the County or whom enters into any contract to which the County is a party.

e. County: The County of Fluvanna, a political subdivision of the Commonwealth of Virginia, including where applicable all agencies and departments of the County.

f. County Administrator: The Fluvanna County Administrator.

g. County Attorney: The Fluvanna County Attorney.

h. Purchasing Agent: The County Administrator is the County's Purchasing Agent and is responsible for the purchasing activity of Fluvanna County; and has signatory authority to bind the County to all contracts and purchases made lawfully under the Fluvanna County Small Purchasing Procedures. The Purchasing Agent has signatory authority to bind the County to all other contracts and purchases only after the contracts or purchases have been approved by a vote of the Fluvanna County Board of Supervisors.

i. General Terms, Conditions and Instructions to Bidders and Contractors (also referred to herein as the "General Conditions"): These General Terms, Conditions and Instructions to Bidders and Contractors shall be attached to and made a part of all Solicitations by the County and all Contracts to which the County is party.

j. His: Any references to "his" shall include his, her, their, or its as appropriate.

k. Invitation to Bid (also referred to herein as an "IFB"): A request which is made to prospective Bidders for their quotation on Goods or Services desired by the County. The issuance of an IFB will contain or incorporate by reference the General Conditions and the other specifications and contractual terms and

conditions applicable to the procurement.

l. Purchasing Officer: The Purchasing Officer employed by the County and to whom Bidders/Contractors can submit questions relating to any Bid or Contract.

m. Request for Proposal (also referred to herein as a "RFP"): A request for an offer from prospective Offerors which shall indicate the general terms which are sought to be procured from Offerors. The RFP will specify the evaluation factors to be used and will contain or incorporate by reference the General Conditions and other applicable contractual terms and conditions, including any unique capabilities or qualifications that will be required of the Contractor.

n. Small Purchasing Procedures: The County's Small Purchasing Procedures, being Chapter 4 of the County's Procurement Policies and Procedures, a method of purchasing not requiring competitive sealed bids or competitive negotiation for single or term contracts for goods and services other than professional services if the aggregate or the sum of all phases is not expected to exceed $50,000; and also allowing for single or term contracts for professional services without requiring competitive negotiation, provided the aggregate or the sum of all phases is not expected to exceed $50,000.

o. Solicitation: The process of notifying prospective Bidders or Offerors that the County wishes to receive Bids or Proposals on a set of requirements to provide Goods or Services. "Solicitation" includes any notification of the County requirements may consist of public advertising (newspaper, County's website, or other electronic notification), the mailing of notices of Solicitation, any Invitation for Quotes ("IFQ"), Initiations to Bid ("IFB"), or Requests for Proposal ("RFP"), the public posting of notices, issuance of an Open Market Procurement ("OMP"), or telephone calls to prospective Bidders or Offerors.

p. State: The Commonwealth of Virginia.

3. AUTHORITY: The Purchasing Agent shall serve as the principal public purchasing official for the County, and shall be responsible for the procurement of goods, services, insurance and construction in accordance with the County's Procurement Policies and Procedures. The Purchasing Agent has responsibility and authority for negotiating, placing and when necessary modifying every Solicitation, Contract and purchase order issued by the County under the County's Small Purchasing Procedures. The Purchasing Agent has signatory authority to bind the County to all contracts and purchases made lawfully under the County's Small Purchasing Procedures. The Purchasing Agent has responsibility and authority for negotiating, placing and when necessary modifying every other Solicitation, Contract and purchase order issued by the County except that the Purchasing Agent has signatory authority to bind the County to all other contracts and purchases ONLY after the contracts or purchases have been adopted and approved by a vote of the Fluvanna County Board of Supervisors (the "Board").

Unless specifically delegated by the Board or the Purchasing Agent, and consistent with the limited authority granted thereto, no other County officer or employee is authorized to order supplies or Services, enter into purchase negotiations or Contracts, or in any way obligate the County for any indebtedness. Any purchase or contract made which is contrary to such authority shall be of no effect and void and the County shall not be bound thereby.

For convenience, the County's Purchasing Officer shall serve as an intermediary between the Purchasing Agent and the Bidder or Contractor and any Bidder or Contractor may direct communications regarding any purchase, Solicitation or Contract to the Purchasing Officer; however as stated *supra* only the Board or County's Purchasing Agent can bind the County and only upon the conditions stated *supra*.

CONDITIONS OF BIDDING

4. **COMPETITION INTENDED:** It is the County's intent to encourage and permit open and competitive bidding in all Solicitations. It shall be the Bidder's responsibility to advise the County in writing if any language, requirement, specification, etc., or any combination thereof, stifles competition or inadvertently restricts or limits the requirements stated in a Solicitation to a single source. The County must receive such notification not later than seven (7) business days prior to the deadline set for acceptance of the Bids. In submitting a Bid, the Bidder guarantees that he or she has not been a party with other Bidders to an agreement to bid a fixed or uniform price. Violation of this implied guarantee shall render the Bid of any Bidder involved void.

5. **DISCRIMINATION PROHIBITED:** Pursuant to Virginia Code § 2.2-4310, the County does not discriminate against Bidders, Offerors or Contractors because of race, religion, color, sex, national origin, age, disability, status as a service disabled veteran, or any other basis prohibited by state law relating to discrimination in employment. Whenever solicitations are made, the County shall include businesses selected from a list made available by the Department of Small Business and Supplier Diversity. Pursuant to Virginia Code § 2.2-4343.1, the County does not discriminate against "faith-based organizations", being a religious organization that is or applies to be a contractor to provide goods or services for programs funded by the block grant provided pursuant to the Personal Responsibility and Work Reconciliation Act of 1996, P.L. 104-193.

6. **CLARIFICATION OF TERMS:** Pursuant to Virginia Code § 2.2-4316, if any Bidder has questions or comments about the specifications or other Solicitation documents, the prospective Bidder should contact the County no later than seven (7) business days prior to the date set for the opening of Bids or receipt of Proposals. Any revisions to the Solicitation will be made only by written addendum issued by the County. Notifications regarding specifications may not be considered if received in less than seven (7) business days of the date set for opening of Bids/receipt of Proposals.

7. **MANDATORY USE OF COUNTY FORM AND TERMS AND CONDITIONS:** Unless otherwise specified in the Solicitation, all Bids must be submitted on the forms

provided by the County, including but not limited to, a Cover Sheet or Pricing Schedule, if applicable, properly signed in ink in the proper spaces and submitted in a sealed envelope or package. Unauthorized modification of or additions to any portion of the Solicitation may be cause for rejection of the Bid. However, the County reserves the right to decide, on a case by case basis, in its sole discretion, whether to reject any Bid or Proposal which has been modified. These General Conditions are mandatory provisions of all Solicitations and all Contracts of the County.

8. **LATE BIDS & MODIFICATION OF BIDS:** Any Bid or modification thereto received at the office designated in the Solicitation after the exact time specified for receipt of the Bid is considered a late Bid or modification thereof. The County is not responsible for delays in the delivery of the mail by the U.S. Postal Service, private carriers or the inter-office mail system. It is the sole responsibility of the Bidder to ensure their Bid reaches County by the designated date and hour. The following rules apply to all Bids submitted to the County:

    a. The official time used in the receipt of Bids/Proposals is that time on the automatic time stamp machine in the Finance Department;
    b. Late Bids or modifications thereof will be returned to the Bidder UNOPENED, if Solicitation number, due date and Bidder's return address is shown on the container;
    c. If a Bid is submitted on time, however a modification thereto is submitted after the due date and time, then the County in its sole discretion may choose to consider the original Bid except that the County may not consider such original Bid if the Bid is withdrawn by the Bidder pursuant to Section 9 below; and
    d. If an emergency or unanticipated event or closing interrupts or suspends the County's normal business operations so that Bids cannot be received by the exact time specified in the Solicitation, then the due date/time specified for receipt of Bids will be deemed to be extended to the same time of day specified in the Solicitation on the first work day on which normal County business operations resume.

9. **WITHDRAWAL OF BIDS:**

    a. Pursuant to Virginia Code § 2.2-4330, a Bidder for a public construction contract, other than a contract for construction or maintenance of public highways, may withdraw his Bid from consideration if the price bid was substantially lower than the other Bids due solely to a mistake in the Bid, provided the Bid was submitted in good faith, and the mistake was a clerical mistake as opposed to a judgment mistake, and was actually due to an unintentional arithmetic error or an unintentional omission of a quantity of work, labor or material made directly in the compilation of a Bid, which unintentional arithmetic error or unintentional omission can be clearly shown by objective evidence drawn from inspection of original work papers, documents and materials used in the preparation of the Bid sought to be withdrawn.

If a Bid contains both clerical and judgment mistakes, a Bidder may withdraw his Bid from consideration if the price bid would have been substantially lower than the other Bids due solely to the clerical mistake, that was an unintentional arithmetic error or an unintentional omission of a quantity of work, labor or material made directly in the compilation of a Bid that shall be clearly shown by objective evidence drawn from inspection of original work papers, documents and materials used in the preparation of the Bid sought to be withdrawn. The Bidder shall give notice in writing to the County of his or her claim of right to withdraw his or her Bid within two (2) business days after the conclusion of the Bid opening procedure and shall submit original work papers with such notice.

b. A Bidder for a Contract other than for public construction may request withdrawal of his or her Bid under the following circumstances:

    i. Bids may be withdrawn on written request from the Bidder received at the address shown in the Solicitation prior to the time of opening.
    ii. Requests for withdrawal of Bids after opening of such Bids but prior to award shall be transmitted to the County, in writing, accompanied by full documentation supporting the request. If the request is based on a claim of error, documentation must show the basis of the error. Such documentation may take the form of supplier quotations, Bidder work sheets, etc. If Bid bonds were tendered with the Bid, the County may exercise its right of collection.

c. No Bid may be withdrawn under this Section 9 when the result would be the awarding of the Contract on another Bid of the same Bidder or of another Bidder in which the ownership of the withdrawing Bidder is more than five percent (5%).

d. If a Bid is withdrawn under the authority of this Section 9 the lowest remaining Bid shall be deemed to be the low Bid.

e. No Bidder who, is permitted to withdraw a Bid shall, for compensation, supply any material or labor to or perform any subcontract or other work agreement for the person or firm to whom the Contract is awarded or otherwise benefit, directly or indirectly, from the performance of the project for which the withdrawn Bid was submitted.

f. The County shall notify the Bidder in writing within five (5) business days of its decision regarding the Bidder's request to withdraw its Bid. If the County denies the withdrawal of a Bid under the provisions of this Section 9, it shall State in such notice the reasons for its decision and award the Contract to such Bidder at the Bid price, provided such Bidder is a responsible and responsive Bidder. At the same time that the notice is provided, the County shall return all work papers and copies thereof that have been submitted by the Bidder.

g. Under these procedures, a mistake shall be proved only from the original work papers, documents and materials delivered as required herein. The work papers, documents and materials submitted by the bidder shall, at the bidder's request, be considered trade secrets or proprietary information subject to the conditions of subsection F of Virginia Code § 2.2-4342.

10. **ERRORS IN BIDS**: When an error is made in extending total prices, the unit Bid price will govern. Erasures in Bids must be initialed by the Bidder. Carelessness in quoting prices, or otherwise in preparation of the Bid, will not relieve the Bidder. Bidders/Offerors are cautioned to recheck their Bids for possible error. Errors discovered after public opening cannot be corrected and the Bidder will be required to perform if his or her Bid is accepted.

11. **IDENTIFICATION ON BID ENVELOPE:** All Bids, Proposals and requested copies thereof submitted to the County shall be in a separate envelope or package, sealed and identified with the following information clearly marked on the outside of the envelope or package:

    a. Addressed as indicated on page 1 of the solicitation;
    b. Solicitation number;
    c. Title;
    d. Bid due date and time;
    e. Bidder’s name and complete mailing address (return address); and
    f. Pursuant to Virginia Code § 2.2-4311.2, the Bidder’s identification number issued by the State Corporation Commission, or if the bidder is not required to be authorized to transact business in the Commonwealth as a foreign business entity under Title 13.1 or Title 50 or as otherwise required by law shall include in its bids or proposal a statement describing why the bidder or offeror is not required to be so authorized.

    If a Bid is not addressed with the information as shown above, the Bidder takes the risk that the envelope may be inadvertently opened and the information compromised, which may cause the Bid to be disqualified. Bids may be hand delivered to the designated location in the County’s offices. No other correspondence or other Proposals/Bids should be placed in the envelope. Any Bidder or Offeror that fails to provide the information required in (f) above shall not receive an award unless a waiver is specifically granted by the County Administrator.

12. **ACCEPTANCE OF BIDS:** Unless otherwise specified, all formal Bids or Proposals submitted shall be valid for a minimum period of one hundred twenty (120) calendar days following the date established for opening or receipt, respectively, unless extend by mutual agreement of the parties. At the end of the one hundred twenty (120) calendar days the Bid/Proposal may be withdrawn at the written request of the Bidder. Thereafter, unless and until the Proposal is withdrawn, it remains in effect until an award is made or the Solicitation is canceled by the County. The County may cancel any Solicitation at any time by notice of such cancelation to the Bidders.

13. **COMPLETENESS:** To be responsive, a Bid must include all information required by the Solicitation.

14. **CONDITIONAL BIDS:** Conditional Bids are subject to rejection in whole or in part.

15. **RESPONSE TO SOLICITATIONS**: In the event a Bidder cannot submit a Bid on a Solicitation, the Bidder is requested to return the Solicitation cover sheet with an explanation as to why the Bidder is unable to Bid on these requirements, or if there be no cover sheet for the Solicitation a letter to the County explaining the same.

16. **BIDDER INTERESTED IN MORE THAN ONE BID AND COLLUSION:** More than one bid from an individual, firm, partnership, corporation or association under the same or different name will be rejected. Reasonable grounds for believing that a bidder is interested in more than one bid for the work contemplated will cause rejection of all bids in which the bidder is interested. Any or all bids may be rejected if there is any reason for believing that collusion exists among the bidders. Participants in such collusion may not be considered in future bids for the same work. Each bidder, as a condition of submitting a bid, shall certify that he is not a party to any collusive action as herein defined. However, a party who has quoted prices on work, materials, or supplies to a Bidder is not thereby disqualified from quoting prices to other Bidders or firms submitting a Bid directly for the work, materials or supplies.

17. **BID OPENING:** Pursuant to Virginia Code § 2.2-4301, all Bids received in response to an IFB will be opened at the date, time and place specified, and announced publicly, and made available for inspection as provided in Section 21 of these General Conditions. Proposals received in response to an RFP will be made available for inspection as provided in Section 21 of these General Conditions.

18. **TAX EXEMPTION:** The County is exempt from the payment of any federal excise or any Virginia sales tax. The price bid must be net, exclusive of taxes. Tax exemption certificates will be furnished if requested by the Bidder.

19. **DEBARMENT STATUS:** By submitting their Bids, Bidders certify that they are not currently debarred from submitting Bids on Contracts by the County, nor are they an agent of any person or entity that is currently debarred from submitting Bids or Proposals on Contracts by the County or any agency, public entity/locality or authority of the State.

20. **NO CONTACT POLICY:** No Bidder shall initiate or otherwise have contact related to the Solicitation with any County representative or employee, other than the Purchasing Officer or Purchasing Agent, after the date and time established for receipt of Bids. Any contact initiated by a Bidder with any County representative, other than the Purchasing Officer or Purchasing Agent, concerning this Solicitation is prohibited and may cause the disqualification of the Bidder.

21. VIRGINIA FREEDOM OF INFORMATION ACT: As provided under Virginia Code § 2.2-4342, all proceedings, records, Contracts and other public records relating to procurement transactions shall be open to the inspection of any citizen, or any interested person, firm or corporation, in accordance with the Virginia Freedom of Information Act of Virginia Code §§ 2.2-3700 *et seq.*, except:

a. Cost estimates relating to a proposed procurement transaction prepared by or for the County shall not be open to public inspection;
b. Any competitive sealed bidding Bidder, upon request, shall be afforded the opportunity to inspect Bid records within a reasonable time after the opening of Bids but prior to award, except in the event that the County decides not to accept any of the Bids and to reopen the Contract. Otherwise, Bid records shall be open to public inspection only after award of the Contract;
c. Any competitive negotiation Offeror, upon request, shall be afforded the opportunity to inspect Proposal records within a reasonable time after the evaluation and negotiations of Proposals are completed but prior to award except in the event that the County decides not to accept any of the Proposals and to reopen the Contract. Otherwise, Proposal records shall be open to the public inspection only after award of the Contract;
d. Any inspection of procurement transaction records under this Section 21 shall be subject to reasonable restrictions to ensure the security and integrity of the records;
e. Trade secrets or proprietary information submitted by a Bidder, Offeror or Contractor in connection with a procurement transaction shall not be subject to public disclosure under the Virginia Freedom of Information Act; however, the Bidder, Offeror or Contractor must invoke the protections of this Section 21 prior to or upon submission of the data or other materials, and must identify the data or other materials to be protected and State the reasons why protection is necessary; and
f. Nothing contained in this Section 21 shall be construed to require the County, when procuring by "competitive negotiation" (RFP), to furnish a Statement of reasons why a particular Proposal was not deemed to be the most advantageous to the County.

22. CONFLICT OF INTEREST: Bidder/Contractor certifies by signing any Bid/Contract to/with the County that no conflict of interest exists between Bidder/Contractor and County that interferes with fair competition and no conflict of interest exists between Bidder/Contractor and any other person or organization that constitutes a conflict of interest with respect to the Bid/Contract with the County.

SPECIFICATIONS

23. OMISSIONS OR DISCREPANCIES: Any items or parts of any equipment listed in a Solicitation which are not fully described or are omitted from such specification, and which are clearly necessary for the completion of such equipment and its appurtenances, shall be considered a part of such equipment although not directly specified or called for

in the specifications. Should a Bidder find a discrepancy or ambiguity in, or an omission from, the Solicitation, including the drawings and/or specifications, he or she shall so notify the County within twenty-four (24) hours of noting the discrepancy, ambiguity or omission and in any event no less than five (5) days prior to the date set for the opening of Bids. If necessary, the County will send a written addendum for clarification to all Bidders no later than three (3) days before the date set for opening of Bids. Any notification regarding specifications received less than five (5) days prior to the date set for the opening of Bids may or may not be considered by the County in its sole discretion. The Bidder shall abide by and comply with the true intent of the specifications and not take advantage of any unintentional error or omission, but shall fully complete every part as the true intent and meaning of the specifications and drawings. Whenever the mention is made of any articles, material or workmanship to be in accordance with laws, ordinances, building codes, underwriter's codes, A.S.T.M. regulations or similar expressions, the requirements of these laws, ordinances, etc., shall be construed as to the minimum requirements of these specifications.

24. **BRAND NAME OR EQUAL ITEMS:** Pursuant to Virginia Code § 2.2-4315, unless otherwise provided in the Solicitation, the name of a certain brand, make or manufacturer does not restrict Bidders to the specific brand, make or manufacturer named; it conveys the general style, type, character, and quality of the article desired, and any article which the County in its sole discretion determines to be the equal of that specified, considering quality, workmanship, economy of operation, and suitability for the purpose intended, shall be accepted. The Bidder is responsible to clearly and specifically indicate the product being offered and to provide sufficient descriptive literature, catalog cuts and technical detail to enable the County to determine if the product offered meets the requirements of the Solicitation. This is required even if offering the exact brand, make or manufacturer specified. Normally in competitive sealed bidding, only the information furnished with the Bid will be considered in the evaluation. Failure to furnish adequate data for evaluation purposes may result in declaring a Bid non-responsive. Unless the Bidder clearly indicates in its Bid that the product offered is "equal" product, such Bid will be considered to offer the brand name product referenced in the Solicitation.

25. **FORMAL SPECIFICATIONS:** When a Solicitation contains a specification which states no substitutes, no deviation therefrom will be permitted and the Bidder will be required to furnish articles in conformity with that specification.

26. **CONDITION OF ITEMS:** Unless otherwise specified in the Solicitation, all items shall be new, in first class condition.

AWARD

27. **RESPONSIBLE BIDDERS:** In determining whether a Bidder is a responsible Bidder as defined herein, at minimum, the following criteria will be considered:

    a. The ability, capacity and skill of the Bidder to perform the Contract or provide the service required under the Solicitation;

b. Whether the Bidder can perform the Contract or provide the service promptly, or within the time specified, without delay or interference;
c. The character, integrity, reputation, judgment, experience and efficiency of the Bidder;
d. The quality of performance of previous Contracts or Services;
e. The previous and existing compliance by the Bidder with laws and ordinances relating to the Contract or Services;
f. The sufficiency of the financial resources and ability of the Bidder to perform the Contract or provide the service;
g. The quality, availability and adaptability of the Goods or Services to the particular use required;
h. The ability of the Bidder to provide future maintenance and service for the use of the subject of the Contract;
i. The number and scope of the conditions attached to the Bid;
j. Whether the Bidder is in arrears to the County on debt or Contract or is a defaulter on surety to the County or whether the Bidder's County taxes or assessments are delinquent; and
k. Such other information as may be secured by the County, the Purchasing Agent or the Purchasing Officer having a bearing on the decision to award the Contract. If an apparent low Bidder is not awarded a Contract for reasons of nonresponsibility, the County shall so notify that Bidder and shall have recorded the reasons in the Solicitation or Contract file.

28. AWARD OR REJECTION OF BIDS; WAIVER OF INFORMALITIES: The County shall award the Contract to the lowest responsive and responsible Bidder complying with all provisions of the IFB, provided the Bid price is reasonable and it is in the best interest of the County to accept it. Awards made in response to a RFP will be made to the highest qualified Offeror whose Proposal is determined, in writing, to be the most advantageous to the County taking into consideration the evaluation factors set forth in the RFP. The County reserves the right to award a Contract by individual items, in the aggregate, or in combination thereof, or to reject any or all Bids and to waive any informality in Bids received whenever such rejection or waiver is in the best interest of the County. Award may be made to as many Bidders/Offerors as deemed necessary to fulfill the anticipated requirements of the County. The County also reserves the right to reject the Bid if a Bidder is deemed to be a non-responsible Bidder. Pursuant to Virginia Code § 2.2-4319, an IFB, a RFP, any other solicitation, or any and all bids or proposals, may be canceled or rejected by the County at any time. The reasons for cancellation or rejection shall be made part of the contract file. The County shall not cancel or reject an IFB, a RFP, any other solicitation, bid or proposal solely to avoid awarding a contract to a particular responsive and responsible bidder or offeror.

29. EXCLUSION OF INSURANCE BIDS PROHIBITED: Pursuant to Virginia Code § 2.2-4320, notwithstanding any other provision of law or these General Conditions, no insurer licensed to transact the business of insurance in the State or approved to issue surplus lines insurance in the State shall be excluded from presenting an insurance bid proposal to the County in response to a RFP or an IFB; excepting that the County may

debar a prospective insurer pursuant to its Debarment Policy, see Chapter 2 of the County's Procurement Policies and Procedures.

30. **ANNOUNCEMENT OF AWARD:** Upon the award or announcement of the decision to award a Contract as a result of this Solicitation, the County will publicly post such notice on the County's bulletin board located at 72 Main Street, 2nd Floor, Palmyra, Virginia 22963. Award results may also be viewed on the County's website.

31. **QUALIFICATIONS OF BIDDERS OR OFFERORS:** The County may make such reasonable investigations as deemed proper and necessary to determine the ability of the Bidder to perform the work/furnish the item(s) and the Bidder shall furnish to the County all such information and data for this purpose as may be requested. The County reserves the right to inspect Bidder's physical facilities prior to award to satisfy questions regarding the Bidder's capabilities. The County further reserves the right to reject any Bid or Proposal if the evidence submitted by or investigations of, such Bidder fails to satisfy the County that such Bidder is properly qualified to carry out the obligations of the Contract and to complete the work/furnish the item(s) contemplated therein.

32. **TIE BIDS AND PREFERENCE FOR VIRGINIA PRODUCTS WITH RECYCLED CONTENT AND FOR VIRGINIA FIRMS**:

    a. Pursuant to Virginia Code § 2.2-4328, in the case of a tie bid on an IFB only, the County may give preference to Goods, Services and construction produced in Fluvanna County or provided by persons, firms or corporations having principal places of business in Fluvanna County. If such choice is not available, preference shall then be given to Goods produced in Virginia, or for goods, services or construction provided by Virginia persons, firms, corporations, pursuant Virginia Code § 2.2-4324. If no County or State choice is available, the tie shall be decided publicly by lot. The decision by the County to make award to one or more such Bidders shall be final.
    b. Whenever the lowest responsive and responsible bidder is a resident of any other state and such state under its laws allows a resident contractor of that state a percentage preference, a like preference shall be allowed to the lowest responsive and responsible bidder who is a resident of Virginia and is the next lowest bidder. If the lowest responsive and responsible bidder is a resident of any other state and such state under its laws allows a resident contractor of that state a price-matching preference, a like preference shall be allowed to responsive and responsible bidders who are residents of Virginia. If the lowest bidder is a resident contractor of a state with an absolute preference, the bid shall not be considered. The Department of General Services shall post and maintain an updated list on its website of all states with an absolute preference for their resident contractors and those states that allow their resident contractors a percentage preference, including the respective percentage amounts. For purposes of compliance with this Section 32, the County may rely upon the accuracy of the information posted on this website.
    c. Notwithstanding the provisions of subsections a and b, in the case of a tie bid in instances where goods are being offered, and existing price preferences have

already been taken into account, preference shall be given to the bidder whose goods contain the greatest amount of recycled content.

d. For the purposes of this Section 32, a Virginia person, firm or corporation shall be deemed to be a resident of Virginia if such person, firm or corporation has been organized pursuant to Virginia law or maintains a principal place of business within Virginia.

33. NEGOTIATION WITH LOWEST RESPONSIBLE BIDDER: Pursuant to Virginia Code § 2.2-4318, unless cancelled or rejected, a responsive Bid from the lowest responsible Bidder shall be accepted as submitted, except that if the Bid from the lowest responsible Bidder exceeds available funds, the County may negotiate with the apparent low Bidder to obtain a Contract price within available funds. However, the negotiation may be undertaken only under conditions and procedures described in writing and approved by the County prior to issuance of the IFB and summarized therein.

CONTRACT PROVISIONS

34. APPLICABLE LAW AND COURTS: Any Bid or Contract resulting from a Solicitation and its terms, including, but not limited to, the parties' obligations under it, and the remedies available to each party for breach of it, shall be governed by, construed and interpreted in accordance with the laws of the Commonwealth of Virginia, and exclusive jurisdiction and venue of any dispute or matters involving litigation between the parties hereto shall be in the courts of Fluvanna County, Virginia. Any jurisdiction's choice of law, conflict of laws, rules, or provisions, including those of the Commonwealth of Virginia, that would cause the application of any laws other than those of the Commonwealth of Virginia, shall not apply. The Contractor shall comply with applicable federal, State and local laws, ordinances, rules and regulations in performance of the Contract.

35. PROVISION AND OWNERSHIP OF INFORMATION: The County shall make a good faith effort to identify and make available to the Contractor all non-confidential technical and administrative data in the County's possession which the County may lawfully release including, but not limited to Contract specifications, drawings, correspondence, and other information specified and required by the Contractor and relating to its work under any Contract. The County reserves its rights of ownership to all material given to the Contractor by the County and to all background information documents, and computer software and documentation developed by the Contractor in performing any Contract.

36. DOCUMENTS: All documents, including but not limited to data compilations, drawings, reports and other material, whether in hard copy or electronic format, prepared, developed or furnished by the Contractor pursuant to any Contract shall be the sole property of the County. At the direction of the County, the Contractor shall have the right to make copies of the documents produced available to other parties. The County shall be entitled to delivery of possession of all documents, upon payment in accordance with the terms of any Contract for the service incurred to produce such documents.

37. CONFIDENTIALITY: Contractor shall not publish, copyright or otherwise disclose or permit to be disclosed or published, the results of any work performed pursuant to this contract, or any particulars thereof, including forms or other materials developed for the County in connection with the performance by Contractor of its services hereunder, without prior written approval of the County. Contractor, cognizant of the sensitive nature of much of the data supplied by the County, shall not disclose any information (other than information which is readily available from sources available to the general public) obtained by it in the course of providing services hereunder without the prior written approval of the County, unless disclosure of such information by it is required by law, rule or regulation or the valid order of a court or administrative agency.

38. INDEPENDENT CONTRACTOR: The Contractor and any agents, or employees of the Contractor, in the performance of any Contract shall act as an independent contractor and not as officers, employees or agents of the County.

39. INSURANCE: The Contractor agrees that, during the period of time it renders services to the County pursuant to any Contract, it shall carry (and provide the County with evidence of coverage) the following minimum amounts of insurance:

Automobile	$500,000	Liability Medical Payment Comprehensive Collision
Public Liability	$1,000,000	
Professional Liability	$1,000,000	
Excess Liability	$2,000,000	Aggregate Over Above Policy Limits (Excluding Professional Liability)
Worker's Compensation	Amount required by Virginia law	

The Contract may specifically require the Contractor to carry higher minimum amounts of insurance.

In addition, the Contractor shall require, and shall include in every subcontract, that any subcontractor providing any goods or services related to such Contract obtain, and continue to maintain for the duration of the work, workers' compensation coverage in the amount required by Virginia law.

40. KEY PERSONNEL: For the duration of any Contract, the Contractor shall make no substitutions of key personnel unless the substitution is necessitated by illness, death, or termination of employment, or as expressly approved by the County. The Contractor

shall notify the County within five (5) calendar days after the occurrence of any of these events and provide the information required by the paragraph below.

The Contractor shall provide a detailed explanation of the circumstances necessitating any proposed substitution, complete resumes for the proposed substitute, and any additional information requested by the County. The proposed substitute should have comparable qualifications to those of the person being replaced. The County will notify the Contractor within fifteen (15) calendar days after receipt of all required information of its approval or disapproval of the proposed substitution.

41. SEVERABILITY: If any term, covenant or provision of these General Conditions or any Contract shall be held to be invalid, illegal or unenforceable in any respect, these General Conditions and any Contract shall remain in effect and be construed without regard to such provision.

42. TITLES: The titles and section headings herein and in any Contract are inserted solely for convenience and are not to be construed as a limitation on the scope of the provisions to which they refer.

43. ATTORNEYS' FEES: In the event of a dispute between the County and Contractor under any Contract which cannot be amicably resolved, in addition to all other remedies, the party substantially prevailing in any litigation shall be entitled to recover its reasonable expenses, including, but not limited to, reasonable attorneys' fees.

44. NO WAIVER: Neither any payment for, nor acceptance of, the whole or any part of the services by the County, nor any extension of time, shall operate as a waiver of any provision of any Contract, nor of any power herein reserved to the County, or any right to damages herein provided, nor shall any waiver of any breach of any Contract be held to be a waiver of any other or subsequent breach. Failure of the County to require compliance with any term or condition of any Contract shall not be deemed a waiver of such term or condition or a waiver of the subsequent enforcement thereof.

45. NO FINANCE CHARGES: No finance charges shall be paid by the County.

46. ANTITRUST: By entering into a Contract, the Contractor conveys, sells, assigns, and transfers to the County all rights, title and interest in and to all causes of the action it may now have or hereafter acquire under the antitrust law of the United States or the State, relating to the particular Goods or Services purchased or acquired by the County under said Contract. Consistent and continued tie bidding could cause rejection of Bids by the County and/or investigation for antitrust violations.

47. PAYMENT: Pursuant to Virginia Code § 2.2-4352, unless more time is provided in the Solicitation or Contract, payment will be made forty-five (45) days after receipt by the County of a proper invoice, or forty-five (45) days after receipt of all Goods or acceptance of work, whichever is later. The County reserves the right to withhold any or all payments or portions thereof for Contractor's failure to perform in accordance with the

provision of the Contract or any modifications thereto. Within twenty (20) days of receipt of proper invoice or of goods or services, the County shall notify the Contractor if any defect or impropriety that would prevent payment by the payment date. The following provisions apply to such payments:

a. Invoices for items/Services ordered, delivered/performed and accepted shall be submitted by the Contractor in duplicate directly to the payment address shown on the purchase order, Solicitation or Contract, as applicable. All invoices shall show the Contract number, purchase order number, or Solicitation number, as applicable, and as required under Virginia Code § 2.2-4354, either the individual Contractor's social security number or the Contractor's federal employer identification number, whichever is applicable.

b. Any payment terms requiring payment in less than forty-five (45) days will be regarded as requiring payment forty-five (45) days after receipt of proper invoice or receipt of all Goods or acceptance of work, whichever occurs later. Notwithstanding the foregoing, offers of discounts for payment in less than forty-five (45) days are valid and enforceable.

c. Pursuant to Virginia Code § 2.2-4353, the date any payment shall be deemed the date of postmark in all cases where payment is made by mail.

d. The County's fiscal year is July 1 to June 30. Contractors are advised to submit invoices, especially for Goods and/or Services provided in the month of June, for the entire month (i.e. June 1 - June 30), so that expenses are recognized in the appropriate fiscal year.

e. Any payment made by the Contractor to the County shall only be made in U.S. Dollars. If payment is received in foreign currency the County may, in its sole discretion, reject such payment and require immediate compensation in U.S. Dollars.

48. SUBCONTRACTORS: Pursuant to Virginia Code § 2.2-4354, in the event that any subcontractors are used by Contractor in connection with the work, Contractor shall:

a. Within seven (7) days after receipt of amounts paid to the Contractor for work performed by a subcontractor, either:
    i. Pay the subcontractor for the proportionate share of the total payment received attributable to the work performed by the subcontractor under any Contract; or
    ii. Notify the County and subcontractor, in writing, of his intention to withhold all or a part of the subcontractor's payment with the reason for nonpayment.

b. Contractor shall require each subcontractor to provide either (i) for an individual, their social security numbers, or (ii) for proprietorships, partnerships, and corporations to provide their federal employer identification numbers.

c. The Contractor shall pay interest to any subcontractor on all amounts owed by the Contractor that remain unpaid after seven days following receipt by the Contractor of payment from the County for work performed by the subcontractor under any Contract, except for amounts withheld as allowed in subdivision (a)(II) above. Unless otherwise provided under the terms of any Contract, interest shall accrue at the rate of one percent (1%) per month.

d. The Contractor shall include in each of its subcontracts under any Contract a provision requiring each subcontractor to include or otherwise be subject to the above payment and interest requirements (a), (b) and (c) with respect to each lower tier subcontractor.

e. The Contractor's obligation to pay an interest charge to a subcontractor pursuant to the payment clause in this Section 48 shall not be construed to be an obligation of the County. No Contract modification may be made for the purpose of providing reimbursement for such interest charge. No cost reimbursement claim may include any amount for reimbursement for such interest charge.

49. RETAINAGE ON CONSTRUCTION CONTRACTS: Pursuant to Virginia Code 2§ 2.2-4333, if a Contract for construction provides for progress payments in installments based upon an estimated percentage of completion, then the contractor shall be paid at least ninety-five percent (95%) of the earned sum when payment is due, with no more than five percent (5%) being retained to ensure faithful performance of the contract. All amounts withheld may be included in the final payment. Any subcontract related to work on a Contract that provides for similar progress payments shall be subject to the provisions above and the Contractor agrees to include such provisions in every subcontract.

50. SUCCESSORS AND ASSIGNS: The County and the Contractor bind themselves and their respective successors and assigns to any Contract. The foregoing notwithstanding, the Contractor shall not assign, sublet or transfer its interest in any Contract without the prior written consent of the County, which may be granted or withheld in the County's sole discretion. Nothing hereinafter mentioned shall be construed as creating any personal liability on the part of any officer, agent or employee of the County, nor shall it be construed as giving any benefits hereunder to anyone other than the County and the Contractor.

51. DEFAULT: Failure of a Contractor to deliver Goods or Services in accordance with Contract terms and conditions and/or within the time specified, or within reasonable time as interpreted by the County in its sole discretion, or failure to make replacements/corrections of rejected articles/services when so requested, immediately or as directed by the County, or failure of the Contractor to act in accordance with the Contract in any material respect, as reasonably determined by the County, shall constitute

a "default" by the Contractor and shall further authority for the County to purchase in the open market articles/services of comparable grade/quality to replace the services, articles rejected, and/or not delivered. On all such purchases, the Contractor shall reimburse the County, within a reasonable time specified by the County, for any expense incurred in excess of Contract prices including, but not limited to, any purchase and administrative costs. Such purchases shall be deducted from the Contract quantities, if applicable. Should public necessity demand it, the County reserves the right to use or consume articles delivered or services performed which are substandard in quality, subject to an adjustment in price to be determined by the County. In case of any default, the County, after due oral or written notice if required in accordance with the Contract, may terminate the Contract at its option in its sole discretion effective immediately. These remedies shall be in addition to any other remedies which the County may have, including but not limited to, any remedies at law, under the Contract or in equity.

Notwithstanding the foregoing, the Contractor shall not be liable for damages for delay in shipment or failure to deliver when such delay or failure is the result of fire, flood, strike, act of God, act of Government, act of an alien enemy or by any other circumstances which, in the County's opinion, are beyond the control of the Contractor. Under such circumstances, however, the County may, at its sole discretion, terminate or cancel the Contract effective immediately.

52. NON-DISCRIMINATION ASSURANCES: The Contractor shall conform to the provisions of the Federal Civil Rights Act of 1964, as amended, as well as the Virginia Fair Employment Act of 1975, as amended, where applicable, and § 2.2-4311 of the Virginia Procurement Act:

a. During the performance of any Contract, the Contractor agrees as follows: the Contractor will not discriminate against any employee or applicant for employment because of race, religion, color, sex, national origin, age, disability, or other basis prohibited by state law relating to discrimination in employment, except where there is a bona fide occupational qualification reasonably necessary to the normal operation of the Contractor. The Contractor agrees to post in conspicuous places, available to employees and applicants for employment, notices setting forth the provisions of this nondiscrimination clause. The Contractor, in all Solicitations or advertisements for employees placed by or on behalf of the Contractor, will state that such Contractor is an equal opportunity employer. Notices, advertisements and Solicitations placed in accordance with federal law, rule or regulation shall be deemed sufficient for the purpose of meeting the requirements of this Section 52.

b. The Contractor shall include the provisions of paragraph (a) above in every subcontract or purchase over $10,000.00 so that the provisions will be binding upon each subcontractor or Vendor.

53. MODIFICATION:

a. Pursuant to Virginia Code § 2.2-4309, these General Conditions and any Contract entered into by the County and any Contractor shall not be subject to change, modification, or discharge except by written instrument signed by the County and Contractor, but no fixed-price contract may be increased by more than twenty-five percent (25%) of the amount of the contract or $50,000, whichever is greater, without the advance written approval of the County's Board. In no event may the amount of any contract, without adequate consideration, be increased for any purpose, including, but not limited to, relief of an offeror from the consequences of an error in its bid or offer.

b. The County may, but is not obligated to, extend the term of an existing contract for services to allow completion of any work undertaken but not completed during the original term of the contract.

c. Nothing in this Section 53 shall prevent the County from placing greater restrictions on contract modifications.

54. INDEMNIFICATION: Contractor agrees to indemnify, keep and save harmless the County, its officers, agents, officials, employees and volunteers against any and all claims, claims of injuries, death, damage to property, patent claims, suits, liabilities, judgments, losses, costs and expenses, including but not limited to costs of investigation, all reasonable attorneys' fees (whether or not litigation results), and the cost of any appeal, occurring or arising in connection with the Contractor's, its agents', subcontractors', employees', or volunteers' negligence or wrongful acts or omissions in connection with its performance of any Contract. The Contractor shall, at his or her own expense, appear, defend and pay all charges of attorneys and all costs and other expenses arising therefrom or incurred in connection therewith; and if any judgment shall be rendered against the County in any such action, the Contractor shall, at his or her own expenses, satisfy and discharge the same. Contractor expressly understands and agrees that any performance bond or insurance protection required by any Contract, or otherwise provided by the Contractor, shall in no way limit the responsibility to indemnify, keep and save harmless and defend the County as herein provided. <u>Nothing contained in this Solicitation or the Contract shall be deemed to be a waiver of the County's sovereign immunity.</u>

55. DRUG-FREE WORKPLACE: Pursuant to Virginia Code § 2.2-4312, in every Contract over $10,000.00 the following provisions apply: During the performance of any Contract, the Contractor agrees to (i) provide a drug-free workplace for the Contractor's employees; (ii) post in conspicuous places, available to employees and applicants for employment, a Statement notifying employees that the unlawful manufacture, sale, distribution, dispensation, possession, or use of a controlled substance or marijuana is prohibited in the Contractor's workplace and specifying the actions that will be taken against employees for violations of such prohibition; (iii) state in all Solicitations or advertisements for employees placed by or on behalf of the Contractor that the Contractor maintains a drug-free workplace; and (iv) include the provisions of the

foregoing clauses in every subcontract or purchase order of over $10,000, so that the provisions will be binding upon each subcontractor or vendor.

For the purposes of this Section, *"drug-free workplace"* means a site for the performance of work done in connection with a specific Contract awarded to a Contractor in accordance with this the VPPA and the County's Procurement Procedures, the employees of whom are prohibited from engaging in the unlawful manufacture, sale, distribution, dispensation, possession or use of any controlled substance or marijuana during the performance of the Contract.

56. TERMINATION: Contracts will remain in force for full periods specified and/or until all articles ordered before date of termination shall have been satisfactorily delivered and accepted and thereafter until all requirements and conditions shall have been met, unless:

a. Terminated prior to expiration date by satisfactory deliveries of entire Contract requirements;

b. Terminated by the County upon thirty (30) days written notice to the Contractor at the County's convenience in the County's sole discretion ("termination for convenience"), unless a termination for convenience is specifically and expressly prohibited by the Contract. Any Contract cancellation notice shall not relieve the Contractor of the obligation to deliver and/or perform on all outstanding orders issued prior to the effective date of the termination;

c. Terminated by the County for cause, default or negligence on the part of the Contractor. However, pursuant to Section 51 of these General Conditions, the County may hold the Contractor responsible for any resulting additional purchase and administrative costs. There is no advance notice requirement in the event of Termination for Cause and termination is effective immediately upon notice to Contractor of the termination for cause;

d. Extended upon written authorization of County and accepted by Contractor, to permit ordering of unordered balances or additional quantities at Contract prices and in accordance with Contract terms.

57. APPROPRIATIONS: Notwithstanding any other provision of any Contract, the payment of the County's obligations under any Contract shall be subject to annual appropriations by the Board of Supervisors of the County in each fiscal year of monies sufficient to satisfy the same.

58. REFERENCES TO VIRGINIA LAW: Any reference in these General Conditions to the Code of Virginia or other relevant Federal, State or local law is incorporated in whole herein by reference as in effect at the time of the Solicitation or Contract as such statutory provisions may be amended or replaced by any statute dealing with the same or similar subject matter.

59. **COOPERATIVE PROCUREMENT**: Except as prohibited by the current Code of Virginia, all resultant Contracts will be extended to other Public Bodies of the Commonwealth of Virginia, to permit their ordering of Goods, supplies and/or Services at the prices and terms of the resulting Contract ("cooperative procurement"). By submitting any Bid or entering into any Contract with the County a Bidder/Contractor expressly authorizes cooperative procurement under Virginia Code § 2.2-4304 to the full extent permitted by law. If any other public body decides to use any Contract, the Contractor must deal directly with that public body concerning all matters relating thereto, including but not limited to, the placement or orders, issuance of the purchase order, contractual disputes, invoicing and payment. The County acts only as the "Contracting Agent" for these public bodies. Any resulting contract with other public bodies shall be governed by the laws of that specific entity. It is the Contractor's responsibility to notify the public bodies of the availability of the Contract. Fluvanna County shall not be held liable for any direct or indirect costs, damages or other claim of any kind incurred by another public body or any Contractor as a result of any cooperative procurement.

60. **AUDIT:** The Contractor hereby agrees to retain all books, records and other documents relative to any Contract for five (5) years after final payment, or until audited by the County, whichever is sooner. The County, its authorized agents, and/or County auditors shall have full access to and right to examine any of said materials during said period.

61. **GUARANTIES AND WARRANTIES:** All guarantees, representations and warranties required shall be furnished by the Contractor and shall be delivered to the Purchasing Agent before final payment on any Contract is made. In addition to any guarantees, representations and warranties required under the Contract, the Contractor agrees to:

    a. Save the County, its agents and employees harmless from liability of any nature or kind for the use of any copyrighted or un-copyrighted composition; secret process, patented or unpatented; invention; article or appliance furnished or used in the performance of a Contract for which the Contractor is not the patentee, assignee, licensee or owner;

    b. Protect the County against latent defective material or workmanship and to repair or replace any damages or marring occasioned in transit or delivery;

    c. Furnish adequate protection against damage to all work and to repair damages of any kind to the building or equipment, to the Contractor's own work or to the work of other contractors, for which the Contractor's workers are responsible;

    d. Pay for all permits, licenses and fees and give all notices and comply with all laws, ordinances, rules and regulations of the County; and

    e. Protect the County from loss or damage to County owned property while it is in the custody of the Contractor;

f. At minimum supply all Goods or Services with the manufacturer's standard warranty, if applicable; and

g. For any Contract involving Services of any nature, the Contractor further agrees to:

   i. Enter upon the performance of Services with all due diligence and dispatch, assiduously press to its complete performance, and exercise therein the highest degree of skill and competence;
   ii. Allow Services to be inspected or reviewed by an employee of the County at any reasonable time and place selected by the County;
   iii. Acknowledges that the County shall be under no obligation to compensate Contractor for any Services not rendered in strict conformity with the Contract; and
   iv. Stipulates that the presence of a County Inspector shall not lessen the obligation of the Contractor for performance in accordance with the Contract requirements, or be deemed a defense on the part of the Contractor for infraction thereof. The Inspector is not authorized to revoke, alter, enlarge, relax, or release any of the requirements of any Contract Any omission or failure on the part of the Inspector to disapprove or reject any work or material shall not be construed to be an acceptance of any such defective work or material.

62. PRICE REDUCTIONS: If at any time after the date of the Bid/Contract the Contractor makes a general price reduction in the comparable price of any material covered by the Contract to customers generally, an equivalent price reduction based on similar quantities and/or considerations shall apply to any Contract for the duration of the Contract period (or until the price is further reduced). Such price reduction shall be effective at the same time and in the same manner as the reduction in the price to customers generally. For purpose of this provision, a "general price reduction" shall mean any horizontal reduction in the price of an article or service offered (1) to Contractor's customers generally, or (2) in the Contractor's price schedule for the class of customers, i.e., wholesalers, jobbers, retailers, etc., which was used as the basis for bidding on this Solicitation. An occasional sale at a lower price, or sale of distressed merchandise at a lower price, would not be considered a "general price reduction" under this provision. The Contractor shall submit his or her invoice at such reduced prices indicating on the invoice that the reduction is pursuant to the "Price Reduction" provision of the Contract documents. The Contractor in addition will within ten (10) days of any general price reduction notify the County of such reduction by letter. FAILURE TO DO SO IS A DEFAULT UNDER THE CONTRACT AND MAY RESULT IN TERMINATION OF THE CONTRACT IN THE COUNTY'S DISCRETION. The Contractor, if requested, shall furnish, within ten (10) days after the end of the Contract period, a statement certifying either (1) that no general price reduction, as defined above, was made after the date of the Bid or Contract, or (2) if any such general price reductions were made, that as provided above, they were reported to the County within ten (10) days and the County was billed at the reduced prices. Where one or more such general price reductions were made, the statement furnished by

the Contractor shall include with respect to each price reduction (1) the date when notice of any such reduction was issued, (2) the effective date of the reduction, and (3) the date when the County was notified of any such reduction.

63. COMPLIANCE WITH IMMIGRATION LAW: Pursuant to Virginia Code § 2.2-4311.1, in every Contract the following provision applies: the Contractor does not, and shall not during the performance of the Contract, knowingly employ an unauthorized alien as defined in the federal Immigration Reform and Control Act of 1986.

64. VIRGINIA STATE CORPORATION COMMISSION: Pursuant to Virginia Code § 2.2-4311.2, Any Bidder or Contractor organized as a stock or non-stock corporation, limited liability company, business trust, or limited partnership or registered as a registered limited liability partnership shall be authorized to transact business in the Commonwealth as a domestic or foreign business entity if so required by Title 13.1 or Title 50 of the Code of Virginia, or as otherwise required by law, at the time of the Bid, Proposal or any response to Solicitation and during the term of the Contract and any Contract renewal. The Contractor shall not allow its existence to lapse or its certificate of authority or registration to transact business in the Commonwealth, if so required, to be revoked or cancelled at any time during the term or any renewal of the Contract. If the Contractor fails to remain in compliance with the provisions of this Section 64, the Contract may become void at the option of the County.

65. CLAIMS PROCEDURE:

a. The procedure for consideration by the County of contractual claims for any Contract shall be that set forth in Virginia Code § 15.2-1243, *et seq*.

b. In addition, pursuant to Virginia Code § 2.2-4364, contractual claims, whether for money or other relief, shall be submitted in writing to the County Administrator no later than sixty (60) days after final payment; however, written notice of the Contractor's intention to file such claim shall have been given at the time of the occurrence or beginning of the work upon which the claim is based. Nothing herein shall preclude a Contract from requiring submission of an invoice for final payment within a certain time after completion and acceptance of the work or acceptance of the Goods. Pendency of claims shall not delay payment of amount agreed due in the final payment.

c. No written decision denying a claim or addressing issues related to the claim shall be considered a denial of the claim unless the written decision is signed by the Board or the County Administrator. The contractor may not institute legal action prior to receipt of the final written decision on the claim unless the County fails to render a decision within ninety (90) days of submission of the claim. Failure of the County to render a decision within ninety (90) days shall not result in the contractor being awarded the relief claimed or in any other relief or penalty. The sole remedy for the County's failure to render a decision within 90 days shall be the contractor's right to institute immediate legal action.

d. A Contractor may not institute legal action, prior to receipt of the County's decision on the claim, unless the County fails to render such decision within the time specified by law. A failure by the County to render a decision within the time provided by law shall be deemed a final decision denying the claim by the County.

e. The decision of the Board or the County Administrator shall be final and conclusive unless the Contractor appeals within six (6) months of the date of the final written decision by instituting legal action as provided in Virginia Code § 2.2-4364.

f. No administrative appeals procedure pursuant to Virginia Code § 2.2-4365 has been adopted for contractual claims by the County.

g. Nothing herein shall be construed to prevent the County from instituting legal action against any Contractor or Bidder.

66. NOTICES: All written notices required or permitted under any Solicitation, Bid or Contract shall be deemed sufficient if delivered in person to the County Purchasing Agent or Bidder/Contractor, as applicable, or sent by first class mail to the County or Bidder/Contractor at the addresses set forth in the Solicitation, Bid or Contract or at such other address as a party may designate from time to time by notice given in accordance with the terms of this Section 66; except that where a Solicitation, Bid or Contract expressly requires notice to a specific individual or at a specific location, such shall control. Such notices are deemed received when actually delivered to the party or its representative or agent if hand delivered, or one (1) business day after deposited into the United States mail, if mailed.

DELIVERY

67. SHIPPING INSTRUCTIONS-CONSIGNMENT: Unless otherwise specified in the Solicitation or Contract, as applicable, each case, crate, barrel, package, etc., delivered under the Contract must be plainly stenciled or securely tagged, stating the Contractor's name, purchase order number, and delivery address as indicated in the order. Where shipping containers are to be used, each container must be marked with the purchase order number, name of the Contractor, the name of the item, the item number, and the quantity contained therein. Deliveries must be made within the hours of 8:00 a.m. – 3:00 p.m. Deliveries at any other time will not be accepted unless specific arrangements have been previously made with the designated individual at the delivery point. No deliveries will be accepted on Saturdays, Sundays and holidays unless previous arrangements have been made. It shall be the responsibility of the Contractor to insure compliance with these instructions for items that are drop-shipped.

68. RESPONSIBILITY FOR SUPPLIES TENDERED: The Contractor shall be responsible for the materials or supplies covered by the Contract until they are delivered

at the designated point. The Contractor shall additionally bear all risk on rejected materials or supplies after notice of rejection is tendered by the County. Rejected materials or supplies must be removed by and at the expense of the Contractor promptly after notification of rejection, unless public health and safety require immediate destruction or other disposal of rejected delivery. If rejected materials are not removed by the Contractor within ten (10) days after date of notification, the County may return the rejected materials or supplies to the Contractor at the Contractor's risk and expense or dispose of them as abandoned property.

69. **INSPECTIONS:** The County reserves the right to conduct any test/inspection it may deem advisable to assure supplies and Services conform to the specification in the Solicitation, Bid or Contract, as applicable. Inspection and acceptance of materials or supplies will be made after delivery at destinations herein specified unless otherwise stated. Unless otherwise specified in the Contract, if inspection is made after delivery at the destination specified, the County will bear the expense of inspection except for the value of samples used in case of rejection. Final inspection shall be conclusive except in regard to latent defects, fraud or such gross mistakes as to amount to fraud. Final inspection and acceptance or rejection of the materials or supplies will be made as promptly as practicable, but failure to inspect and accept or reject materials or supplies shall not impose liability on the County for such materials or supplies as are not in accordance with the specifications.

70. **COMPLIANCE:** Delivery must be made as ordered and in accordance with the Solicitation, Bid or Contract, as applicable, or as directed by the County when not in conflict with the Bid/Contract. The decision as to reasonable compliance with delivery terms shall be final. Burden of proof of delay in receipt of Goods by the purchaser shall rest with the Contractor. Any request for extension of time of delivery from that specified must be approved by the County, such extension applying only to the particular item or shipment affected. Unless otherwise specified in the Contract, should the Contractor be unreasonably delayed by the County, there shall be added to the time of completion a time equal to the period of such delay caused by the County. However, the Contractor shall not be entitled to claim damages or extra compensation for such delay or suspension. These conditions may vary for construction Contracts.

71. **POINT OF DESTINATION:** All materials shipped to the County must be shipped F.O.B. DESTINATION unless otherwise stated specifically in the Solicitation, Bid or Contract, as applicable. The materials must be delivered to the "Ship To" address indicated on the purchase order or Solicitation, as applicable.

72. **REPLACEMENT:** Materials or components that have been rejected by the County, in accordance with the terms of the Contract, shall be replaced by the Contractor at no cost to the County.

73. **DAMAGES:** Any and all damages to property of the "County" that is the direct result of the Contractor, the employees of the Contractor and/or its subcontractors, agents, licensees, successors, or assigns, shall be the sole responsibility of the Contractor. The

property shall be repaired to its last known condition prior to the damages and/or replaced at no cost to the County. The County shall approve any and all repairs/replacements prior to acceptance of the repairs/replacement.

74. PACKING SLIPS OR DELIVERY TICKETS: All shipments shall be accompanied by Packing Slips or Delivery Tickets and shall contain the following information for each item delivered:

a. Purchase Order Number;

b. Name of Article and Stock Number;

c. Quantity Ordered;

d. Quantity Shipped;

e. Quantity Back Ordered; and

f. The Name of the Contractor.

Contractors are cautioned that failure to comply with these conditions shall be considered sufficient reason for refusal to accept the Goods.

75. ADDITIONAL CHARGES: No delivery charges of any kind shall be added to any invoice; except that (i) if Goods are expressly bought F.O.B. "shipping point" under the Contract and the Contractor prepays transportation, then delivery charges shall be added to invoices; and (ii) if express delivery is authorized and substituted by the County on orders for the method specified in the Contract, then the difference between freight or mail and express charges may be added to invoice.

76. METHOD AND CONTAINERS: Unless otherwise specified, Goods shall be delivered in commercial packages in standard commercial containers, so constructed as to ensure acceptance by common or other carrier for safe transportation to the point of delivery. Containers become the property of the County unless otherwise specified by bidder.

GenServ LLC

Response to IFB # 2019-1

Prepared For:

County of Fluvanna
Procurement and Technical Contact:
Cyndi Toler, Purchasing Officer
332 Main St.
P.O. Box 540
Palmyra, Va. 22963

Preventative Maintenance and On-Call and Emergency Services for Generators

Index

1. Overview of Firm
2. GenServ LLC Statement of Project Requirements
3. Scope of Services: GenServ LLC PM Checklist Form
4. Principal Contact/Project Manager & Resume
5. References / Relevant Experience
6. Pricing Sheets
7. Vendor Data Sheet (Attachment A)
8. Proof of Authority to Transact Business (Attachment B)
9. Certificate of No Collusion (Attachment C)
10. Bidder Statement

GenServ LLC

81 Vance Lane
Stuarts Draft, Va. 24477
Office: (540) 337-1928
Cell: (540) 414-3491
Fax: (540) 337-1928

Overview of Firm:

GenServ LLC was established in 2009. We bring with us 20 years of experience in the emergency generator preventative maintenance and repair industry. We are SWAM and Microbusiness certified, (682926), and EVA registered, (VSOOOOO5406). GenServ LLC recognizes the need for excellence within the County of Fluvanna and will vigorously support its mission by providing fiscally responsible, high quality inclusive services with an immediate, (2 Hour), response time, twenty-four hours a day, seven days a week, 365 days a year. At GenServ LLC our proven service performance ensures reliable customer service with respect to your emergency generator systems. Our many years of experience has instilled in us an innate understanding of the unique demands and functional requirements of the County of Fluvanna environment. We are a highly experienced and flexible company dedicated to the individual needs of our customers. GenServ LLC will meet and exceed the requirements set forth by the County of Fluvanna and its Department of Public Works.

Statement of Project Requirements:

The goal of GenServ LLC is to meet and exceed the requirements set forth by the County of Fluvanna with the highest quality inclusive services, immediate,(2 Hour),response time, twenty-four hours a day, seven days a week, 365 days a year, at the most affordable cost. We will utilize our comprehensive preventative maintenance and routine/repair maintenance plan to ensure proper operation of all twenty-two,(22), emergency generators to the specifications and satisfaction of the County of Fluvanna. Our comprehensive services are to include all of the following twenty-two,(22), emergency generator systems:

1. Palmyra WWTP
2. Palmyra Sewage Pump Station
3. Morris Well (Trailer Mounted)
4. Omohundro Well (Trailer Mounted)
5. Treasure's Building
6. Courts Building
7. Courthouse Well, Storage & Booster Facility
8. Palmyra Fire Station
9. Palmyra Rescue Squad
10. Cell Tower @ Palmrya Fire Station
11. Kents Store Fire Station
12. Fork Union Fire Station
13. FUSD Office (Former Fire Station)
14. Administration Building
15. Public Safety Building
16. E911 Tower- Pleasant Grove (@ Public Safety Building)
17. E911 Tower-Columbia (@ Former Columbia Elementary)
18. E911 Tower-Fork Union (@ Closed Landfill)
19. E911 Tower-Palmyra (@ CVEC Property)
20. E911 Tower-Scottsville (@ VFW Hall)
21. E911 Tower-Bremo (@ Dominion)
22. Command Trailer

Scope Of Services:

GenServ LLC will provide scheduled emergency generator services, four,(4), visits per year, per emergency generator system. Our services will follow the guidelines as outlined by the manufacturer's operation and maintenance manuals. GenServ LLC will install/provide parts and lubricants as recommended by the manufacturer of the individual emergency generator systems. In addition, GenServ LLC shall provide all services/perform all work during regular business hours and in the most fiscally responsible manner. We will create a work schedule for all the Fluvanna County generator systems in accordance with the previously performed preventative maintenance schedule. Our comprehensive services will include the following:

*See GenServ LLC Preventative Maintenance Checklist Form: Attached

Office: (540) 337-1928
Mobile: (540) 414-3491
Email: tuckerf250@gmail.com

GenServ

Preventative Maintenance Inspection

CUSTOMER _____ LOCATION _____ DATE _____
WO# _____ TECHNICIAN _____ HOUR METER _____ KW _____
PACKAGE GENSET MODEL _____ PACKAGE S/N _____
ENGINE MODEL _____ ENGINE S/N _____
GENERATOR MODEL _____ GENERATOR S/N _____

1. ENGINE LUBRICATION OIL SYSTEM			G. Gas Tank and Controls			O. Starting Motor Performance		
A. Oil			H. Operation of Governor & Controls			P. Lights Panel _____ Room _____		
B. Oil Changed Y ( ) N ( )			I. Pressure Gauge			Q. Battery Charger Operation F.R. __ H. R. __		
C. Filter Changed Y ( ) N ( )			J. Fuel Pressure			**6. GENERATOR SETS**		
D. Wt. of Oil _____			K. High Idle _____			A. Generator Exciter System		
E. Oil Sample Taken Y ( ) N ( )			L. Low Idle _____			Generator Bearing		
F. Condition of Breather			**4. AIR INDUCTION & EXHAUST SYSTEM**			Meter Panel (Visual)		
G. Condition of Service Meter			A. Engine Power (Performance)			B. Regulator Settings: Voltage		
H. Oil Pressure Gauge			B. Exhaust Smoke			Voltage Gain		
I. Blowby			C. Condition of Pre-Cleaner			Voltage Droop		
J. Engine Noise			D. Inlet Piping. Seals/Gaskets & Connections			C. Engine/Generator Frame: Mounting Bolts		
K. Tubes. Connections & Seals			E. Element Housing Condition			D. Auto Start-Stop:		
L. Cylinder Heads			F. Element Service Indicator			E. Safety Shut-Off.		
M. Valve Cover Base			G. Air Cleaner Elements – Changed Yes/No			L.O.____O.S.____O.C.____HWT___		
N. Valve Cover			H. Condition/Sound of Turbo			F. Pre Alarms		
2. COOLING SYSTEM			I. Turbo Oil Leaks			G. Switch Gear General Operation		
A. Core Condition (Inside)			J. Exhaust Pipes/Gaskets/Connections			Terminals & Wiring		
Core Condition (Outside)			K. Rain Cap			Fuses		
B. Radiator Cap (Inspect Seal)			L. Exhaust Manifold System			Control Panel, Lights		
C. Coolant Level			**5. ELECTRICAL SYSTEM**			H. Indicate Either Standby or Prime Application		
D. Conditioner PPM _____			A. Battery Water Level			I. Room Temp (70 Deg F) Ambient		
E. Anti-freeze (Freeze Pt _____)			B. No. of Batteries _____			J. Governor: Setting & Droop		
F. House and Clamps			C. Condition of Cells S.G.			**7. OTHER**		
G. Tubes and Connectors			D. Battery 1: _____ _____ _____			A. General Appearance		
H. Fan Belt/Pulley			_____ _____ _____			B. Cleanliness		
I. Fan Belt Adjustment			E. Battery 2: _____ _____ _____			C. Fire Extinguisher		
J. Fan Bearings Blades			_____ _____ _____			**Comments:**		
K. Water Pump (Bearings & Leaks)			F. Battery 3: _____ _____ _____					
L. Operating Temp _____			_____ _____ _____					
M. Engine Block Heater Left___Right___			G. Battery 4: _____ _____ _____					
N. Louvers			_____ _____ _____					
3. FUEL SYSTEM			H. Cables & Posts					
A. Condition of Main Tank and Cap			I. Generator/Alternator Belt					
B. Condition of Day Tank			J. Wiring and Switches					
C. Condition of Primary Filter – Changed Yes/No			K. Operation of Glow Plugs					
D. Condition of Secondary Filter – Changed Yes/No			L. Ammeter Operation/Glass					
E. Lines and Connections			M. Generator/Alternator Output					
F. Priming Pump			N. Regulator Setting					

TECHNICIAN'S COMMENTS: _____

OK
CAUTION

✓ = OK
X = NEEDS ATTENTION

CUSTOMER SIGNATURE _____

Principal Contact:

The following represents the information requested with respect to the individual from GenServ LLC that will be assigned to work with the County of Fluvanna. Included in this information is the documentation requested from GenServ LLC as it relates to training and experience. Please be advised that GenServ LLC has designated David T. Fretwell to act as the primary contact and coordinator for GenServ LLC's proposal and for any subsequent communication required by GenServ LLC as part of this IFB. Please be advised that GenSer LLC will not utilize any sub-contractors with respect to this IFB. Mr. Fretwells' contact information is as follows:

David T. Fretwell
81 Vance Lane
Stuarts Draft, Va. 24477
Office: (540) 337-1928
Fax: (540) 337-1928
Cell: (540) 414-3491

David T. Fretwell Experience History & Training

2009-Present	GenServ LLC Stuarts Draft Va. 24477	Owner
1993-2009	Carter Machinery/Caterpillar Salem, Va. Emergency Power Generation Technician	
1989-1993	On-Site Energy, New York Emergency Power Generation Technician *Supplied Power to World Trade Center after 1993 Bombing	
1984-1989	Cummins Metro-Power, New York Repair/Maintenance of Heavy Duty Equipment * All Phases of Truck Repair	
1983-1984	Municipal Machinery, New York Heavy Equipment Repair	

1982-1983	Expressway Truck Repair, New York Diesel Mechanic, Maintenance and Repair Heavy Equipment and Tractor Trailers
1980-1982	Denver Diesel and Automotive College, Denver Co. A.O.S. Degree: Auto/Diesel Technology and Advanced Diesel Technician

References/Relevant Experience

GenServ LLC has performed comparable projects with various municipalities/utilities listed below. Similar projects performed by GenServ LLC include but are not limited to; Waste Water Treatment Plants, Lift and Pump Stations, Water Treatment Plants, Emergency Back-Up Power for Municipal Buildings, 911 Centers, and Fire and Rescue.

1. Mr. J.G. Mader
Augusta County Service Authority 2012-Present
P.O. Box 859
Verona. Va. 24482
(540) 245-5229

2. Mr. George Miller
Nelson County Service Authority 2010-Present
P.O. Box 249
Lovingston, Va. 22949
(434) 325-8097

3. Mr. J. Malloy
Shenandoah County 2010-Present
600 N. Main St. Suite 109
Woodstock, Va. 22664
(540) 459-6323

4. Mr. Gary Critzer
City of Waynesboro 2014-Present
250 S. Wayne St. Suite 301
Waynesboro, Va. 22980
(540)942-6624

5. Mr. Chad Nester
Virginia Dept. of Transportation, Staunton District 2012-Present
811 Commerce Rd.
Staunton, Va. 24401
(540) 332-9075

List of Generators/ Pricing Schedule

Facility Name	Generator Description						PM Price	Qty	Annual Cost
	Manufacturer	Model #	Serial #	Size (KVA)	Engine	Fuel			
Palmyra WWTP	Cummins	DQDAA578806	D070045806	250	Cummins	Diesel	$225.00	4	$900.00
Palmyra Sewage Pump Station	Cummins	40DGHD6691	C070035603	40	Cummins	Diesel	$175.00	4	$700.00
Morris Well (Trailer Mounted)	QAS	QAS788JDS	4734	65	John Deere	Diesel	$175.00	4	$700.00
Omohundro Well (Trailer Mounted)	QAS	QAS788JDS	4733	65	John Deere	Diesel	$175.00	4	$700.00
Treasurer's Building	Onan	35DGBB	1940555925	35	Cummins	Diesel	$175.00	4	$700.00
Courts Building	Kohler	230REOZD	700848	230	Detroit	Diesel	$225.00	4	$900.00
Courthouse Well, Storage & Booster Facility	Kohler	100R02T	CB6059T417844	130	John Deere	Diesel	$225.00	4	$900.00
Palmyra Fire Station	Generac	7105030100	2090366	135	Ford	Propane	$175.00	4	$700.00
Palmyra Rescue Squad	MagnaPlus	2631 S1 1516	LM-326309-1198	22		Diesel	$225.00	4	$900.00
Cell Tower @ Palmyra Fire Station	Cummins	6GNAC-2678	F038510583	16	Cummins	Propane	$175.00	4	$700.00
Kents Store Fire Station	Cummins	GGHH5386069	H100151725	100	Ford	Propane	$175.00	4	$700.00
Fork Union Fire Station	Kohler	50RZ262	60382	50	Ford	Propane	$175.00	4	$700.00
FUSD Office (former fire station)	Kohler	5DR2262	603872	49	Ford	Propane	$175.00	4	$700.00
Administration Building	Cummins	DGCB5735908	G050808495	90	Cummins	Diesel	$175.00	4	$700.00
Public Safety Building	Kohler	200REOZJB	746019	200	John Deere	Diesel	$225.00	4	$900.00
E911 Tower - Pleasant Grove (@ Public Safety Building)	Generac	SG0050AG035.4V18HPLYC		50	Ford	Propane	$175.00	4	$700.00
E911 Tower - Columbia (@ Former Columbia Elementary)	Generac	SG0050AG035.4V18HPLYC		50	Ford	Propane	$175.00	4	$700.00
E911 Tower - Fork Union (@ Closed Landfill)	Generac	SG0050AG035.4V18HPLYC		50	Ford	Propane	$175.00	4	$700.00
E911 Tower - Palmyra (@CVEC Property)	Generac	SG0050AG035.4V18HPLYC		50	Ford	Propane	$175.00	4	$700.00
E911 Tower - Scottsville (@VFW Hall)	Generac	SG0050AG035.4V18HPLYC		50	Ford	Propane	$175.00	4	$700.00
E911 Tower - Bremo (@Dominion)	Generac	SG0050AG035.4V18HPLYC		50	Ford	Propane	$175.00	4	$700.00
Command Trailer	ONAN	10HDKCC42345A	C050760772	10		Propane	$175.00	4	$700.00
					Total:		$4100.00		$16,400.00

RATES FOR ON-CALL & EMERGENCY REPAIRS

Flat Rate Fee for Travel (per occurrence, if applicable)	$200.00
Mechanic Hourly Rate, Normal Time, 8 A.M. – 5 P.M.	$85.00
Electrician Hourly Rate, Normal Time, 8 A.M. – 5 P.M.	$85.00
Mechanic Overtime Hourly Rate, After 5 P.M. & Holidays	$127.50
Electrician Overtime Hourly Rate, After 5 P.M. & Holidays	$127.50

VENDOR DATA SHEET

Note: The following information is required as part of your response to this solicitation. Failure to complete and provide this sheet may result in finding your bid nonresponsive.

1. Qualification: The vendor must have the capability and capacity in all respects to satisfy fully all of the contractual requirements.

2. Vendor's Primary Contact:
Name: David T. Fretwell Phone: 540-414-3491

3. Years in Business: Indicate the length of time you have been in business providing this type of good or service: 9 Years 1 Months

4. Vendor Information:
FIN or FEI Number: 80-0487977 If Company, Corporation, or Partnership
SSN: _____ (If Vendor is a sole proprietor)

5. Indicate below a listing of at least four (4) current or recent accounts, either commercial or governmental, that your company is servicing, has serviced, or has provided similar goods. Include the length of service and the name, address, and telephone number of the point of contact.

Company: Augusta Co. Service Authority	Contact: J.G. Mader
Phone: 540-245-5229	Email: jgmader@co.augusta.va.us
Dates of Service: 2012-Present	$$ Value: 8500.00

Company: Nelson Co. Service Authority	Contact: George Miller
Phone: 434-325-8097	Email: gmiller@nelsoncountyserviceauthority.com
Dates of Service: 2010-Present	$$ Value: 5925.00

Company: Shenandoah County	Contact: J. Malloy
Phone: 540-459-6323	Email: jmalloy@shenandoahcounty.va.us
Dates of Service: 2010-Present	$$ Value: 3435.00

Company: City Of Waynesboro	Contact: Gary Critzer
Phone: 540-942-6624	Email: CritzerGP@waynesboro.va.us
Dates of Service: 2014-Present	$$ Value: 24,000.00

By my signature below, I, as a duly authorized representative of the entity named below, certify the accuracy of the foregoing information:

GenServ LLC Date: 11-5-18
Legal Name of Entity if Applicable

By: _____ (SEAL) Print Name: David T. Fretwell
Signature of Authorized Representative

Print Title: Owner

Vendor Certification (for a Sole Proprietor):

_____ (SEAL) Print Name: _____ Date: _____
Signature

PLEASE RETURN THIS PAGE WITH PROPOSAL SUBMISSION – [REQUIRED]

PROOF OF AUTHORITY TO TRANSACT BUSINESS IN VIRGINIA

THIS FORM MUST BE SUBMITTED WITH YOUR PROPOSAL/BID. FAILURE TO INCLUDE THIS FORM MAY RESULT IN REJECTION OF YOUR PROPOSAL/BID

Pursuant to Virginia Code §2.2-4311.2, an Offeror/Bidder organized or authorized to transact business in The Commonwealth pursuant to Title 13.1 or Title 50 of the Code of Virginia shall include in its proposal/bid the identification number issued to it by the State Corporation Commission ("SCC"). Any Offeror/Bidder that is not required to be authorized to transact business in the Commonwealth as a foreign business entity under Title 13.1 or Title 50 of the Code of Virginia or as otherwise required by law shall include in its proposal/bid a statement describing why the Offeror/Bidder is not required to be so authorized. Any Offeror/Bidder described herein that fails to provide the required information shall not receive an award unless a waiver of this requirement and the administrative policies and procedures established to implement this section is granted by the County Administrator, as applicable. If this quote for goods or services is accepted by the County of Fluvanna, Virginia, the undersigned agrees that the requirements of the Code of Virginia Section 2.2-4311.2 have been met.

Please complete the following by checking the appropriate line that applies and providing the requested information. ***PLEASE NOTE: The SCC number is NOT your federal ID number or business license number.***

A. X Offeror/Bidder is a Virginia business entity organized and authorized to transact business in Virginia by the SCC and such vendor's Identification Number issued to it by the SCC is S305700-9.

B._____ Offeror/Bidder is an out-of-state (foreign) business entity that is authorized to transact business in Virginia by the SCC and such vendor's Identification Number issued to it by the SCC is _____.

C._____ Offeror/Bidder does not have an Identification Number issued to it by the SCC and such vendor is not required to be authorized to transact business in Virginia by the SCC for the following reason(s):
Please attach additional sheets if you need to explain why such Offeror/Bidder is not required to be authorized to transact business in Virginia.

Legal Name of Company (as listed on W-9): GenServ LLC

Legal Name of Offeror/Bidder: David T. Fretwell
Date: November 8,2018
Authorized Signature: _____
Print or Type Name and Title: David T. Fretwell, Owner

PLEASE RETURN THIS PAGE WITH PROPOSAL SUBMISSION – [REQUIRED]

CERTIFICATE OF NO COLLUSION:

The undersigned, acting on behalf of GenServ LLC, does hereby certify in connection with the procurement and proposal to which this Certificate of No Collusion is attached that:

This proposal is not the result of, or affected by, any act of collusion with another person engaged in the same line of business or commerce; nor is this proposal the result of, or affected by, any act of fraud punishable under Article 1.1 of Chapter 12 of Title 18.1 of the Code of Virginia, 1950, as amended (18.2-498.1 et seq.).

The undersigned declares that the person or persons signing this proposal is/are fully authorized to sign the proposal on behalf of the firm listed and to fully bind the firm listed to all conditions and provisions thereof.

Respectfully submitted this 5 day of November, ~~2015.~~ 2018

GenServ LLC
Legal Name of Entity

By: _____ (SEAL)
Signature of Authorized Representative

Print Name: David T. Fretwell

Print Title: Owner

Date: November 5, 2018

ACKNOWLEDGEMENT

State of Virginia
In the County/City of Augusta, **to-wit:**

The foregoing Certification of No Collusion was subscriber and sworn to before me by David T. Fretwell (Print Name), Owner (Print Title) on behalf of Genserv LLC (Print Name of Entity) on this 5 day of November (month), 2018 (year).

Rebecca D. Armstrong
Notary Public

My commission expires: April 30, 2020

Registration Number: 7693163

REBECCA D ARMSTRONG
NOTARY PUBLIC
REGISTRATION # 7693163
COMMONWEALTH OF VIRGINIA
MY COMMISSION EXPIRES
4-30-2020

PLEASE RETURN THIS PAGE WITH PROPOSAL SUBMISSION – [REQUIRED]

OFFEROR STATEMENT

The undersigned Offeror hereby certifies that the Offeror has carefully examined all instructions, plans, conditions, specifications and other documents or items of this Request for Proposal and hereby submits this Proposal pursuant to such instructions, plans, conditions, specifications and other documents or items.

Complete if Offeror is an Entity:

WITNESS the following duly authorized signature and seal:

Name of Entity: GenServ LLC
By: _____ (SEAL)
Signature
Print Name: David T. Fretwell
Print Title: Owner

STATE OF Virginia
COUNTY/CITY OF Augusta, to-wit:

The foregoing instrument was acknowledged before me this 5 day of November (month), 2018 (year) by David T. Fretwell (Print Name), Owner (Print Title) on behalf of GenServ LLC (Name of Entity).

Rebecca D. Armstrong [SEAL]
Notary Public

My commission expires: April 30, 2020
Notary registration number: 7693163

REBECCA D ARMSTRONG
NOTARY PUBLIC
REGISTRATION # 7693163
COMMONWEALTH OF VIRGINIA
MY COMMISSION EXPIRES
4-30-2020

Complete if Offeror is a Sole Proprietor:
Witness the following signature and seal:

_____ (SEAL)
Signature
Print Name: _____

STATE OF _____
COUNTY/CITY OF _____, to-wit:
The foregoing instrument was acknowledged before me this ___ day of _____ (month), _____ (year) by _____ (Print Name), a sole proprietor.

_____ [SEAL]
Notary Public

My commission expires: _____
Notary registration number: _____

PLEASE RETURN THIS PAGE WITH PROPOSAL SUBMISSION – [REQUIRED]

TAB C

FLUVANNA COUNTY BOARD OF SUPERVISORS
AGENDA ITEM STAFF REPORT

MEETING DATE:	January 9, 2019
AGENDA TITLE:	Zion Crossroad Elevated Water Storage Tank Contract
MOTION(s):	**I move the Board of Supervisors approve the Zion Crossroad Elevated Water Storage Tank Contract with CB&I LLC in the amount of $1,991,000.00, and authorize the County Administrator to execute the Agreement, subject to approval as to form by the County Attorney.**

STRATEGIC INITIATIVE?	Yes	No	**If yes, list initiative(s):**	C9
	x			

AGENDA CATEGORY:	Public Hearing	Action Matter	Presentation	Consent Agenda	Other
		x			

STAFF CONTACT(S):	Cyndi Toler, Purchasing Officer
PRESENTER(S):	Cyndi Toler, Purchasing Officer
RECOMMENDATION:	Approval
TIMING:	Routine

DISCUSSION:

- **May 2018: IFB's issued for Construction**
  - Bid Opening on October 9, 2018 at the Fluvanna Community Center
  - Bids Received
    - 2018-03 Water and Sewer System- 6 Bids
    - 2018-04 Elevated Water Tank- 4 Bids
    - 2018-05 Water Booster Station and Wastewater Pump Station- 6 Bids
- Low bids have all been reviewed and approved by both Dewberry Engineers and the County Attorney's office.

	Estimated Construction Cost	Final Low Bid	Bidder	Bid to Estimate Difference
Elevated Water Storage Tank	$2,239,400			
Elevated Water Storage Tank Subtotal	**$2,239,400**	**$1,991,000**	**CBI**	**($248,400)**

-
- CB&I LLC is a 130 year old company, with extensive experience in designing, fabricating and erecting storage tanks
- has designed and built over 25,000 elevated water storage tanks
- As part of the bidding documents, CB&I submitted a proposed revision to the design of the base cone to a diameter of 29' – 9"; Both the Engineer at Dewberry and Wayne Stevens reviewed this revision and found it to be an acceptable change.

FISCAL IMPACT:	Budgeted in the ZXR Water system project				
POLICY IMPACT:	NA				
LEGISLATIVE HISTORY:	NA				
ENCLOSURES:	Zion Crossroad Elevated Water Storage Tank Contract				
REVIEWS COMPLETED:	Legal	Finance	Purchasing	HR	Other
	x		**x**		

Zion Crossroad Elevated Water Storage Tank Agreement Under IFB 2018-04

This document is based off of EJCDC C-520 Suggested Form of Agreement Between Owner and Contractor for Construction Contract (Stipulated Price), but has been substantially modified

THIS AGREEMENT (the "Agreement") is by and between Fluvanna County, a political subdivision of the Commonwealth of Virginia ("Owner") and CB&I LLC, formerly CB&I Inc., also sometimes referred to as McDermott and CB&I Storage Tank Solutions, a Texas limited liability company authorized to transact business in Virginia (referred to as both "Bidder" and "Contractor"). All capitalized terms used herein shall have the meaning as defined in the General Conditions, attached hereto as Exhibit F, unless the context requires otherwise.

For mutual consideration, the sufficiency of which is acknowledged, the Owner and Contractor hereby agree as follows:

ARTICLE 1 - WORK

1.01 Contractor shall complete all Work as specified or indicated in the Contract Documents. The Work is generally described as follows: Construction of the Zion Crossroads Elevated Water Storage Tank pursuant to that Invitation for Bids 2018-04 Zion Crossroads Elevated Water Storage Tank issued May 9, 2018 and all attachments, exhibits, and addendums thereto (the "IFB").

ARTICLE 2 - THE PROJECT

2.01 The Project for which the Work under the Contract Documents may be the whole or only a part is generally described as follows: Construction of the Zion Crossroads Elevated Water Storage Tank.

ARTICLE 3 - ENGINEER

3.01 The Project has been designed by Dewberry Engineers Inc. (Engineer), which is to assume all duties and responsibilities, and have the rights and authority assigned to Engineer in the Contract Documents in connection with the completion of the Work in accordance with the Contract Documents unless otherwise notified by the Owner from time to time.

ARTICLE 4 - CONTRACT TIMES

4.01 Time of the Essence

A. All time limits for Milestones, if any, Substantial Completion, and completion and readiness for final payment as stated in the Contract Documents are of the essence of the Contract.

4.02 Days to Achieve Substantial Completion and Final Payment

A. The Work will be substantially completed within 360 days after the date when the Contract Times commence to run as provided in Paragraph 2.03 of the General Conditions, and

completed and ready for final payment in accordance with Paragraph 14.07 of the General Conditions within 420 days after the date when the Contract Times commence to run.

4.03 Liquidated Damages

A. Contractor and Owner recognize that time is of the essence as stated in Paragraph 4.01 above and that Owner will suffer financial loss if the Work is not completed within the times specified in Paragraph 4.02 above, plus any extensions thereof allowed in accordance with Article 12 of the General Conditions. The parties also recognize the delays, expense, and difficulties involved in proving in a legal or arbitration proceeding the actual loss suffered by Owner if the Work is not completed on time. Accordingly, instead of requiring any such proof, Owner and Contractor agree that as liquidated damages for delay (but not as a penalty), Contractor shall pay Owner $500.00 for each day that expires after the time specified in Paragraph 4.02 above for Substantial Completion until the Work is substantially complete. After Substantial Completion, if Contractor shall neglect, refuse, or fail to complete the remaining Work within the Contract Time or any proper extension thereof granted by Owner, Contractor shall pay Owner $500.00 for each day that expires after the time specified in Paragraph 4.02 above for completion and readiness for final payment until the Work is completed and ready for final payment.

ARTICLE 5 - CONTRACT PRICE

5.01 Owner shall pay Contractor for completion of the Work in accordance with the Contract Documents an amount in current funds equal to the sum of the amounts determined pursuant to Paragraphs 5.01.A, 5.01.B, and 5.01.C below:

A. For all Work other than Unit Price Work, a lump sum of: ONE MILLION NINE HUNDRED NINETY THOUSAND FOUR HUNDRED TWENTY AND NO/100 DOLLARS ($1,990,420.00). See Part A of Basis of Bid on Bid Form submitted by Contractor.

All specific cash allowances are included in the above price in accordance with Paragraph 11.02 of the General Conditions.

B. For all Unit Price Work, an amount equal to the sum of the established unit price for each separately identified item of Unit Price Work times the actual quantity of that item:

The Bid prices for Unit Price Work set forth as of the Effective Date of the Agreement are based on estimated quantities. As provided in Paragraph 11.03 of the General Conditions, estimated quantities are not guaranteed, and determinations of actual quantities and classifications are to be made by Engineer as provided in Paragraph 9.07 of the General Conditions.

For all Unit Price Work, see Part B and Part C of Basis of Bid on Bid Form (being $220.00 and $360.00, respectively) submitted by Contractor.

C. For all Work, at the prices stated in Contractor's Bid, attached hereto as an exhibit.

ARTICLE 6 - PAYMENT PROCEDURES

6.01 Final Payment, Submittal and Processing of Payments

A. The Contractor shall be paid a total of ONE MILLION NINE HUNDRED NINETY-ONE THOUSAND AND NO/100 DOLLARS ($1,991,000.00) (the "Contract Price") for the Work on the Project in accordance with this Agreement (and specifically with 5.01 above) after the completion of all of the Work on the Project to the sole satisfaction of the Owner; however the Contract Price may change as set forth in 5.01B above since the Unit Price Work Bid price amount is based on estimated quantities which are not guaranteed, and determinations of actual quantities and classifications are to be made by Engineer. Such payment shall be made in accordance with Section 47 "Payment" of the County's General Terms, as defined below in Article 9, and in no event, shall Contractor be paid prior to the Completion Date of the Project (being final completion to the sole satisfaction of the Owner and not substantial completion). Contractor shall submit an invoice on the Application for Payment in accordance with Article 14 of the General Conditions to the Owner upon Final Completion and the Owner shall pay a proper invoice within forty-five (45) days of receipt. Payment in full under for the Work will be made after final completion of the work. Contractor shall only submit Applications for Payment in accordance with Article 14 of the General Conditions. Applications for Payment will be processed by Owner as provided in the General Conditions and the County's General Terms.

6.02 Progress Payments; Retainage:

A. In lieu of payment in full at completion and if specifically requested by Contractor in its Bid, Owner shall make progress payments on account of the Contract Price on the basis of Contractor's Applications for Payment after competition of those milestones identified in an attachment to this Agreement as **Exhibit J** ("Payment Milestones"), but such progress payments shall only be up to those limits in Paragraph 6.02.A.1 below. All such payments will be measured by the schedule of milestones established as provided in Paragraph 2.07.A of the General Conditions. Such payments shall be made in accordance with Section 47 "Payment" of the County's General Terms, defined below in Article 9 below, and in no event, shall Contractor be paid prior to the completion date of each Milestone on the Project. Contractor shall submit an invoice on the Application for Payment in accordance with Article 14 of the General Conditions to the Owner upon completion of each milestone and the Owner shall pay a proper invoice within forty-five days of receipt. Payment in full for all of the Work will be made after final completion of the work. Contractor shall only submit Applications for Payment in accordance with Article 14 of the General Conditions. Applications for Payment will be processed by Owner as provided in the General Conditions and the County's General Terms.

1. **In no event will progress payments made to the Contractor for Milestones exceed either:**

a. **95 percent of Work completed** (with the balance being retainage). If the character and progress of the Work have not been satisfactory to Owner and Engineer, then additional retainage will apply; and

b. **95 percent of cost of materials and equipment not incorporated in the Work** (with the balance being retainage).

c. **The above retainage will only be paid to the Contractor upon final completion to the sole satisfaction of the Owner** after proper invoice to the Owner consistent with Section 6.01 above.

d. Milestones may be identified in a schedule by the Contractor that references dates each Milestone will be completed within x number of days of the date the Contract Times commerce under the Article 2.03 of the General Conditions.

6.03 Final Payment

A. Upon final completion and acceptance of the Work in accordance with Paragraph 14.07 of the General Conditions, Owner shall pay the remainder of the Contract Price, if any, as provided in said Paragraph 14.07.

ARTICLE 7 - INTEREST

7.01 There shall be NO interest owed on any late payment made by the Owner.

ARTICLE 8 - CONTRACTOR'S REPRESENTATIONS

8.01 In order to induce Owner to enter into this Agreement, Contractor makes the following representations:

A. Contractor has examined and carefully studied the Contract Documents and the other related data identified in the Bidding Documents.

B. Contractor has visited the Site and become familiar with and is satisfied as to the general, local, and Site conditions that may affect cost, progress, and performance of the Work.

C. Contractor is familiar with and is satisfied as to all federal, state, and local Laws and Regulations that may affect cost, progress, and performance of the Work.

D. Contractor has carefully studied all, if any: (l) reports of explorations and tests of subsurface conditions at or contiguous to the Site and all drawings of physical conditions relating to existing surface or subsurface structures at the Site (except Underground Facilities), if any, that have been identified in Paragraph SC-4.02 of the Supplementary Conditions as containing reliable "technical data," and (2) reports and drawings of Hazardous Environmental Conditions, if any, at the Site that have been identified in Paragraph SC-4.06 of the Supplementary Conditions as containing reliable "technical data."

E. Contractor has considered the information known to Contractor; information commonly known to contractors doing business in the locality of the Site; information and observations obtained from visits to the Site; the Contract Documents; and the Site-related reports and drawings identified in the Contract Documents, with respect to the effect of such information, observations, and documents on (1) the cost, progress, and performance of the Work; (2) the means, methods, techniques, sequences, and procedures of construction to be employed by Contractor, including any specific means, methods, techniques, sequences, and procedures of construction expressly required by the Contract Documents; and (3) Contractor's safety precautions and programs.

F. Based on the information and observations referred to in Paragraph 8.01.E above, Contractor does not consider that further examinations, investigations, explorations, tests, studies, or data are necessary for the performance of the Work at the Contract Price, within the Contract Times, and in accordance with the other terms and conditions of the Contract Documents.

G. Contractor is aware of the general nature of work to be performed by Owner and others at the Site that relates to the Work as indicated in the Contract Documents.

H. Contractor has given Engineer written notice of all conflicts, errors, ambiguities, or discrepancies that Contractor has discovered in the Contract Documents, and the written resolution thereof by Engineer is acceptable to Contractor.

I. The Contract Documents are generally sufficient to indicate and convey understanding of all terms and conditions for performance and furnishing of the Work.

ARTICLE 9 - CONTRACT DOCUMENTS

9.01 Contents

A. The Contract Documents (also referred to as the “Contract Package”) consist of the following:

1. **This Agreement; and**
2. **The Exhibits attached hereto and made a material part hereof being the following:**

A. **Exhibit A:** Portions of the Invitation for Bid 2018-04 Project Manual, being the following:

A1 - Bidding Requirements being the Owner's Advertisement for Bids entitled Invitation for Bid #2018-04 Zion Crossroads Elevated Water Storage Tank together with the County of Fluvanna General Terms, Conditions and Instructions to Bidders and Contractors (the “County’s General Terms”);

A2 - Instructions to Bidders; and

A3 - Any and all Addenda, amendments, exhibits, or attachments thereto, and specifically including Addendums No. 1 dated July 3, 2018, Addendum No. 2 dated August 24, 2018, and Addendum No. 3 dated September 26, 2018 (collectively the Addendums are sometimes referred to herein as the "IFB Addendums");

B. **Exhibit B:** The Contractor's Bid dated October 9, 2018, as amended by that letter agreement dated December 11, 2018 enlarging the tank base diameter to 29 feet 9 inches, being the offer or proposal of the Bidder/Contractor submitted including the prescribed forms (including without limitation the Contractor's Qualification Statement, Bid Form, and Bid Bond) setting forth the prices for the Work to be performed including any and all exhibits, addenda, amendments, or attachments thereto;

C. **Exhibit C:** Notice to Proceed (form of the same to be issued by the Owner within 30 days of the Effective Date of this Agreement, as defined below);

D. **Exhibit D:** Performance bond (entitled "Standard performance Bond for Construction Contracts");

E. **Exhibit E:** Payment Bond (entitled "Standard Labor and Material Payment Bond");

F. **Exhibit F:** General Conditions;

G. **Exhibit G:** Forms under the agreement, to be completed at appropriate times, from time to time, and used as described in the Contract Documents:

G1 – Contractors Application for Payment;

G2 – Certificate of Substantial Completion;

G3 – Work Change Directive;

G4 – Change Order;

G5 – Field Order; and

G6 – Request for Information;

H. **Exhibit H:** Technical Specifications (**Owner and Contractor acknowledge and agree that the IFB Addendums modified the Technical Specifications.)**

TECHNICAL SPECIFICATIONS
Division 01 - General Requirements
Section 01010 – Summary of Work
Section 01013 – Mobilization

Section 01200 – Price and Payment Procedure
Section 01310 – Project Meetings
Section 01320 – Scheduling of Construction
Section 01330 – Submittal Procedures
Section 01400 – Testing and Special Inspections
Section 01500 – Temporary Facilities and Controls
Section 01730 – Operating and Maintenance Data
Section 01770 – Closeout Procedures

Division 02 – Site Work

Section 02100 – Site Preparation
Section 02110 – Clearing and Grubbing
Section 02120 – Erosion and Sediment Control
Section 02220 – Site Demolition
Section 02230 – Dewatering
Section 02300 – Earthwork
Section 02325 – Trenching and Backfilling
Section 02600 – Piping System Testing
Section 02798 – Utility Location and Identification
Section 02821 – Chain Link Fence and Gates
Section 02920 – Turf and Grasses

Division 03 – Concrete

Section 03240 – Adhesive Anchors
Section 03300 - Cast-In-Place Concrete
Section 03400 – Precast Concrete Structures
Section 03600 – Grout

Division 05 – Metals

Section 05520 - Aluminum Access Hatches
Section 05530 - Pipe Supports and Stands

Division 06 – Wood & Plastics

Section 06100 – Rough Carpentry

Division 09 – Finishes

Section 09900 - Piping and Equipment Coatings and Painting
Section 09920 – Coating for Steel Water Storage Tank

Division 11 – Equipment

Section 11100 – Process Piping
Section 11110 – Flow Measurement
Section 11150 – Valves, Hydrants, and Appurtenances
Section 11200 – Submersible Water Mixer
Section 11810 – Pipe Identification Markers
Section 11820 – Disinfection and Flushing of Water Tanks and Piping Systems

Division 13 – Special Construction

Section 13100 – Pedesphere Elevated Water Storage Tank

Division 16 – Electrical

Section 16010 – General Electrical Provisions
Section 16110 – Raceways
Section 16120 – Wiring
Section 16131 – Pull and Junction Boxes
Section 16132 – Pilot Devices

Section 16133 – Position Switches
Section 16134 – Switch and Outlet Boxes
Section 16470 – General Lighting and Distribution Panelboards
Section 16620 – Emergency Standby Power System
Appendices
Appendix A – Geotechnical Engineering Report
Zion Crossroads Water and Sewer System, Elevated Water Storage Tank, October 2017

I. **Exhibit I:** Drawings consisting of 20 sheets dated May 4, 2018 with each sheet bearing the following general title: Zion Crossroads Elevated Storage Tank.

J. **Exhibit J:** Payment Milestones – See Monthly Cash Flow and Schedule of Values. **All payments are subject to the provisions of Article 6 above. Notwithstanding any other provision of this Agreement and consistent with Article 6, all payments to be made under this Agreement shall be subject to withholding by the Owner of a five percent (5%) retainage only to be paid at Final Completion.**

B. The documents listed in Paragraph 9.01A are attached to this Agreement and made a material part of this Agreement.

C. The Contract Documents may only be amended, modified, or supplemented as provided in Paragraph 3.04 of the General Conditions.

D. The parties agree that in the definition of "Resident Project Representative" in the "General Conditions" (being Exhibit F hereto), "Wayne Stephens Director of Public Works" is replaced with "Steven M. Nichols, Fluvanna County Administrator".

E. In the event of a conflict between this Agreement and any of the exhibits the following shall be the order of preference in resolving any conflicts: (i) this **Agreement**, (ii) **Exhibit B**, being the Bid; (iii) the **IFB Addendums**; (iv) **Exhibit A**, except the IFB Addendums; (v) **Exhibit F**, being the General Conditions; (vi) **Exhibit H**, being the Technical Specifications, as modified be the IFB Addendums; (vii) **Exhibit I**, being the Project Drawings, as modified by the IFB Addendums, if applicable; (viii) **Exhibit C**, being the Notice to proceed; (ix) **Exhibit D**; (x) **Exhibit E**; and (xi) **Exhibit G**, as blank forms. For clarification, (i) being this Agreement above shall control over (ii) through (xi) above; (ii) being Exhibit B shall control over (iii) through (xi), and so forth. Whenever possible the Agreement and all of the exhibits shall be read together.

ARTICLE 10 - MISCELLANEOUS

10.01 Terms

A. Terms used in this Agreement will have the meanings stated in the Invitation for Bid, General Conditions and the Supplementary Conditions.

10.02 Assignment of Contract

A. No assignment by a party hereto of any rights under or interests in the Contract will be binding on another party hereto without the written consent of the party sought to be bound in its sole discretion; and, specifically but without limitation, moneys that may become due and moneys that are due may not be assigned without such consent (except to the extent that the effect of this restriction may be limited by law), and unless specifically stated to the contrary in any written consent to an assignment, no assignment will release or discharge the assignor from any duty or responsibility under the Contract Documents.

10.03 Successors and Assigns

A. Owner and Contractor each binds itself, its partners, successors, assigns, and legal representatives to the other party hereto, its partners, successors, assigns, and legal representatives in respect to all covenants, agreements, and obligations contained in the Contract Documents.

10.04 Severability

A. Any provision or part of the Contract Documents held to be void or unenforceable under any Law or Regulation shall be deemed stricken, and all remaining provisions shall continue to be valid and binding upon Owner and Contractor, who agree that the Contract Documents shall be reformed to replace such stricken provision or part thereof with a valid and enforceable provision that comes as close as possible to expressing the intention of the stricken provision.

10.05 Contractor's Certifications

A. Contractor certifies that it has not engaged in corrupt, fraudulent, collusive, or coercive practices in competing for or in executing the Contract. For the purposes of this Paragraph 10.05:

1. "corrupt practice" means the offering, giving, receiving, or soliciting of anything of value likely to influence the action of a public official in the bidding process or in the Contract execution;

2. “fraudulent practice" means an intentional misrepresentation of facts made (a) to influence the bidding process or the execution of the Contract to the detriment of Owner, (b) to establish Bid or Contract prices at artificial non-competitive levels, or (c) to deprive Owner of the benefits of free and open competition;

3. "collusive practice" means a scheme or arrangement between two or more Bidders, with or without the knowledge of Owner, a purpose of which is to establish Bid prices at artificial, non-competitive levels; and

4. "coercive practice" means harming or threatening to harm, directly or indirectly, persons or their property to influence their participation in the bidding process or affect the execution of the Contract.

10.06 The Effective Date of the Agreement.

This Agreement is signed and sealed on the dates indicated below. **As used in the Contract Documents the "Effective Date" and the "Effective Date of the Agreement" is February 6, 2019; and notwithstanding any other provision of this Agreement, the Owner shall have 30 days from the Effective Date, being on or before March 8, 2019 to issue the Notice to proceed**. Notwithstanding the foregoing should the Owner issue the Notice to Proceed prior to February 6, 2019, then the date that times will commence to run as set forth in such Notice to Proceed or February 6, 2019, whichever is sooner, shall be the Effective Date" and the "Effective Date of the Agreement".

10.07 Property Acquisition Accommodations.

Owner and Contractor acknowledge and agree that significant property acquisitions (permanent easements, temporary easements, and land in fee) by the Owner are required for the Project and that issues may arise in which portions of the property interests needed for the Project or access thereto for the construction cannot be obtained prior to the time that the Contract Times commence to run. In the event that the County is reasonably and diligently pursuing such needed property interest(s), the Contractor agrees to make accommodations and accept change orders (whenever reasonable at no cost to the County) to avoid those portions of the Project, as will be set forth in the Notice to Proceed, during a portion of the Contract Times until such later time that the property can be acquired or accessed by the County for the Project whenever the Project schedule can reasonably be modified to account for the same.

[Signature page to follow.]

IN WITNESS WHEREOF, Owner and Contractor's duly authorized representatives have signed and sealed this Agreement as of the dates set forth below. Counterparts have been delivered to Owner and Contractor. All portions of the Contract Documents have been signed or have been identified by Owner and Contractor or on their behalf.

OWNER: Fluvanna County

By:_____

Steven M. Nichols, County Administrator

DATE: _____

Attest: _____

Title: _____

Address for Notices:

Fluvanna County
Attn: County Administrator
132 Main Street
Palmyra, VA 22963

With a copy to:
Fluvanna County Attorney
414 East Jefferson Street
Charlottesville, VA 22902

Approved as to form:

_____
Fluvanna County Attorney

CONTRACTOR: CB&I LLC

By:_____

Printed Name: _____

Title: _____

DATE: _____

Attest: _____

Title: _____

Address for Notices:

CB&I LLC (License No. 2701023269)
_____
_____
_____

Address for Service of Process:
_____
_____
_____

SEEN AND ACKNOWLEDGED:
ENGINEER:
Dewberry Engineers, Inc.

By: _____

Printed Name: _____

Title: _____

Date:_____

Exhibit A

Exhibit A1

COUNTY OF FLUVANNA, VIRGINIA
Invitation for Bid (IFB) #2018-04
Zion Crossroads Elevated Water Storage Tank
Issue Date: May 9, 2018
Due Date: July 24, 2018

Procurement & Technical Contact:
County of Fluvanna
Cyndi Toler, Purchasing Officer
132 Main Street
P.O. Box 540
Palmyra, VA 22963
Ph: (434) 591-1930 ext. 1124
Email: ctoler@fluvannacounty.org

All sealed bids shall be turned in no later 2:00 p.m. EST, July 24, 2018. All bids that are delivered via mail or are hand delivered must be addressed to the "Procurement Contact" listed above. Any Bids that are turned in late will be rejected and returned unopened. Any Bids sent in via facsimile, telephone, or email shall not be considered.

Bid documents may be picked up at the Fluvanna County Department of Finance located at 132 Main Street, 2nd floor, Palmyra, VA 22963 or by clicking on the following link: https://www.fluvannacounty.org/rfps.

1. GENERAL INFORMATION

By this Invitation for Bids ("IFB"), the Fluvanna County Board of Supervisors (hereinafter the "County" or "Owner") is seeking competitive sealed bids from qualified licensed contractors (herein referred to interchangeably as "Contractor" or "Bidder") to establish a firm fixed price contract with Contractor to furnish, deliver, supply and install all necessary labor, and materials associated with the construction of the Zion Crossroads Elevated Water Storage Tank and other work related thereto (collectively the "Tank") and complete any and all necessary or appropriate associated work at the site ("Site Work") in accordance with the specifications, terms and conditions stated herein. Collectively, the work on the Tank and Site Work are referred to herein as the "Project" or "project". The project consists of providing and installing a 500,000 gallon pedesphere elevated storage tank, and meter vault in Fluvanna County, VA. This Project is one of three simultaneous projects related to the Zion Crossroads Water and Sewer System Project, the other projects are generally known as the "Water and Sewer System" and the "Water Booster Pump Station and Wastewater Pump Station" (collectively the "Other Projects"). These Other Projects are under separate contracts and Contractor will be responsible for coordination with the Other Projects and associated contractors. The project includes, but is not limited to:

A. Construction and installation of a 500,000 gallon pedesphere elevated storage tank.
   1. Tank shall have a flow through design with separate inlet and outlet riser pipes.
   2. A mixer to ensure complete tank mixing.
   3. Cathodic protection of the sacrificial anode design.

B. Two (2) below grade meter vaults with strainer, check valve, flow meter, and motorized butterfly valve.

1. Each flow meter will be configured to either meter flow received from or sent to Louisa County.

C. Provide electrical service to elevated storage tank.

D. Provide site improvements including a gravel site, fencing, and grading away from tank.

2. **PLANS AND SPECIFICATIONS/EXHIBITS:** The following exhibits are attached hereto and incorporated herein as material parts of this IFB (collectively the "Plans and Specifications"):

A. **APPENDIX I –** County of Fluvanna General Terms, Conditions and Instructions to Bidders and Contractors;

B. **INSTRUCTION TO BIDDERS** (based off of Engineers Joint Contract Documents Committee ("EJCDC") C-200 Suggested Instructions to Bidders for Construction Contracts, but is substantially modified);

C. **Contractor's Qualification Statement** (based off EJCDC form);

D. **Bid Form** (based off of EJCDC C-410 Suggested Bid Form for Construction Contracts, but is modified);

E. **Bid Bond** (EJCDC C-430 Bid Bond (Penal Sum Form);

F. **Notice of Award** (EJCDC C-510 Notice of Award);

G. **Agreement** (based off of EJCDC Suggested form of Agreement Between Owner and Contractor for Construction Contract (Stipulated Price), but is substantially modified);

H. **Notice to Proceed** (EJCDC C-550 Notice to Proceed);

I. **Standard Performance Bond for Construction Contracts**;

J. **Standard Payment Bond for Construction Contracts**;

K. **Contractor's Application for Payment** (EJCDC C-620 Contractor's Application for Payment);

L. **Certificate of Substantial Completion** (EJCDC C-625 Certificate of Substantial Completion);

M. **General Conditions** (Based off of EJCDC C-700 Standard General Conditions of the Construction Contract, but substantially modified);

N. **Supplementary Conditions** (Based off of EJCDC C-800 Supplementary Conditions of the Construction Contract, but substantially modified);

O. **Work Change Directive** (EJCDC C-940 Work Change Directive);

P. **Change Order** (based off of EJCDC C-941 Change Order, but substantially modified);

Q. **Field Order** (based off of EJCDC C-942 Field Order, but substantially modified);

R. **Request for Information form;**

S. **Pre-Bid Question Form** (suggested format); and

T. Any and all Project plans, documents, manuals, drawings, criteria, requirements, specifications or other materials attached to this IFB, incorporated by reference into any of the above documents or into this IFB by reference including without limitation all those Technical Specifications identified in the Table of Contents and those Sections entitled "Division 01 – General Requirements", "Division 02 – Site Construction", "Division 03 – Concrete", "Division 05 – Metals", "Division 06 – Wood & Plastics", "Division 09 – Finishes", "Division 11 – Equipment", "Division 13 – Special Construction", "Division 16 – Electrical" and "Appendices" as well as the "Zion Crossroads Elevated Water Storage Tank" drawings.

To the extent any exhibit hereto directly conflicts with APPENDIX I – County of Fluvanna General Terms, Conditions and Instructions to Bidders and Contractors (the "County's General Terms"), the County's General Terms shall control. Whenever possible exhibits shall be read together and all provisions and requirements thereof shall be met even if they cover the same subject matter.

This IFB and the Plans and Specifications are a material part of the Contract Documents as such is defined in the General Requirements.

3. PRE-BID CONFERENCE:

A. A mandatory Pre-Bid Conference will be held at the Fluvanna County Administration Building, Morris Room located at 132 Main St, Palmyra, Virginia 22963 at 10:00 AM, local prevailing time on June 27, 2017. All prospective bidders must attend.

B. At the pre-bid conference Bidders will be allowed to inspect and analyze the current environment and collect further data in determination of their ability to perform the work on the Project. Any Procurement and technical questions shall be directed to Cyndi Toler, Purchasing Officer at ctoler@fluvannacounty.org during the course of this solicitation. The Bidder shall be presumed to have made a reasonable inspection of the Site(s) before the time of Bid submission and shall be held responsible for all information available through such inspections; and submission of a Bid will be a confirmation that the Bidder did make a site inspection and is aware of all conditions affecting performance and price(s) submitted. The County may determine in its sole discretion that a second pre-bid conference is necessary, the date and time of any such second pre-bid conference will be disclosed in an amendment to this IFB.

4. SCOPE OF WORK: Contractor shall provide, furnish deliver, supply and install, all necessary or appropriate labor, services, parts, tools, materials, equipment, items and resources as may be required to complete the work on the Project (the "Scope of Work"), in accordance with the specifications and terms and conditions stated herein, which Scope of Work, shall include at minimum, but is not limited to, all of the following:

A. **Contractor Minimum Requirements:** At minimum the Contractor must meet these minimum performance standards:

i. The Contractor should have, at a minimum, a current Class "A" Contractor's license as issued by the Commonwealth of Virginia Board of Contractors, Department of Professional and Occupational Regulation.

ii. The Contractor shall possess the appropriate contractor's license with the specific specialty services as recognized by the Virginia Board for Contractors, Department of Professional and Occupational Regulation to perform any services required for the work on the Project.

iii. The Contractor's firm should have been in business providing similar services promulgated in this solicitation for a minimum of five (5) consecutive years.

iv. The Contractor's personnel assigned to the resulting contract should wear appropriate uniforms or attire that, at a minimum, bear the contractor's company name, the employees name, and shall be maintained in a professional condition at all times.

v. The Contractor shall be responsible for providing quality services on the Project in accordance with industry standards, plans, directions and instruction as provided hereunder and in any resulting Contract.

vi. All equipment, materials and installation work provided as a part of the Project shall conform to applicable Federal, State and local laws, regulations, rules and procedures including without limitation the Virginia Uniform Statewide Building Codes, OSHA and the specifications of this IFB.

vii. Contractor(s) shall report any safety concerns, near misses, accidents and injuries related to the work area to the County immediately.

viii. Contractor(s) shall warrant replace or repair any defective product, materials, installation or services on the Project for three (3) years from County's final acceptance of any services hereunder, work or services on the Project at no additional cost. County shall be deemed to have accepted services hereunder only after receipt of a proper and detailed invoice from Contractor for all of the work on the Project and payment by the County to Contractor in full on such invoice.

ix. Contractor(s) shall respond to emergency warranty repairs within one (1) day and shall respond to routine warranty repairs within three (3) business days.

x. The Contractor shall transfer and assign to the County any and all warranties or similar guarantees for any materials or products provided by Contractor to the County hereunder.

xi. The winning bidder will deliver a performance and payment bond in an amount equal to the contract price from an insurer licensed in Virginia.

B. **Building Specifications:** At minimum, the Tank and Site Work and all work on the Project must meet the following requirements:

i. Be in all respects consistent with and meet any and all provisions, notes, requirements or specifications any and all attachments to this IFB (the "Plans and Specifications"). Site work is required to the extent necessary to produce a finished Project that meets or exceeds all the requirements and specifications provided in this IFB, including without limitation the Plans and Specifications.

ii. All work, services, labor and materials shall be consistent with requirements of Applicable Law (as defined in 4(G) below).

C. **ADDITIONAL REQUIREMENTS:** The Contractor shall

i. Assign a Supervisor to the project that shall be the main point of contact for the project.

ii. Assure and guaranty that all equipment, materials, and installation work shall conform to the most current adopted Virginia Uniform Statewide Building Codes, OSHA, and this IFB.

iii. Examine the work areas and site conditions under which work stated herein shall be performed. Contractor shall notify County of any condition(s) which may affect the Project.

iv. Locate and clearly mark all underground utilities prior to construction.

v. Perform all site preparation work inclusive of soil excavation and rough grade.

vi. Provide grade stakes or locator flags to flag corners of building.

vii. Obtain building permit.

viii. Provide on-site supervision of construction activities.

ix. Provide final approval/inspection and acceptance of Tank, etc. for the Project.

x. Provide finished grading work.

xi. Verify site preparation work with a County designated Project Manager.

xii. Deliver building materials to site location as designated by the Project Manager.

xiii. Erect building(s).

xiv. Furnish and install all supplementary or miscellaneous items, appurtenances and devices incidental to or necessary for a sound, secure and complete installation.

xv. Provide County with any applicable manufacturer warranties.

xvi. Agree to all of the provisions of the County of Fluvanna's General Terms, Conditions and Instructions to Bidders and Contractors attached to this IFB as Appendix I and further shall agree that any resulting contract awarded pursuant to this IFB shall incorporate by reference as material provisions of such Contract the County of Fluvanna's General Terms, Conditions and Instructions to Bidders and Contractors. Any resulting Contract shall be in form acceptable to the County in its sole discretion.

D. **PROTECTION OF PERSON AND PROPERTY:**

i. All materials shall be protected from damage during delivery, storage and installation.

ii. Work can be done on property from sun up to sun down 7 days a week.

iii. The Contractor is responsible to keep a clean and safe construction area at the end of each work day.

iv. Contractor shall be responsible for initiating, maintaining and supervision of all safety precautions in connection with the work being performed. Any damage to existing Property, site, buildings, land or personal property, resulting from the Work on the Project or the performance of a Contract awarded pursuant to this IFB shall be repaired or replaced at the sole cost and expense of the Contractor to the satisfaction of the County. The Contractor shall repair and/or replace any damage done to any County property by their employees or resulting from Contractor's services as soon as practicable, but in any event, no more than ten (10) calendar days after notification by the County. All such repairs or replacements shall be completed to the County's sole satisfaction. To protect the Contractor, the Contactor shall document any damages in the project area prior to commencing work. This written record shall be provided to the County prior to commencing work.

E. **BUILDING PERMITS & INSPECTIONS:**

i. The Contractor shall locate all underground utilities and their depth and location prior to starting any work on the Project.

ii. The Contractor shall apply for all required building permits before starting the Work on this Project.

iii. Contractor shall notify the county to arrange for inspections at agreed milestones and shall notify for final inspection.

iv. Plans and Specifications are attached hereto.

F. **INSURANCE REQUIREMENTS:**

i. The Contractor shall agree to carry the required liability insurances that are listed under item number 39 of the "GENERAL TERMS, CONDITIONS AND INSTRUCTIONS TO BIDDERS AND CONTRACTORS" attached hereto as Appendix I and also as required by the Contract Documents.

ii. By signing and submitting a proposal under this solicitation, the Contractor certifies that if awarded the contract, it will have the insurance coverage required at the time the work commences. The Contractor further certifies that the contractor will maintain the specified coverage during the entire term of the contract and that all insurance coverage will be provided by insurance companies authorized to sell insurance in Virginia by the Virginia State Corporation Commission.

iii. During the period of the contract the County reserves the right to require the Contractor to furnish certificates of insurance for the coverage from time to time.

iv. This is a construction contract under the Virginia Public Procurement Act and Performance and Payment Bonds shall be required pursuant to Virginia Code Section 2.2-4337.

G. **APPLICABLE LAW:** The Contractor shall comply with applicable federal, State and local laws, ordinances, rules and regulations in performance of the Contract ("Applicable Law"), including without limitation:

i. The Americans with Disabilities Act, as this Project is a new construction Project for a unit of government; and

ii. The Virginia Statewide Building Code.

5. SUBMITTAL INSTRUCTIONS

A. The County will not be responsible for any expenses incurred by a Contractor in preparing and submitting a Bid. All Bids shall provide a straight-forward, concise delineation of the Contractor's capabilities to satisfy the requirements of this IFB. Emphasis should be on completeness and clarity of content. The contents of the Bid submitted by the successful Bidder and this IFB, and any amendments thereto, will become part of any contract awarded as a result of this IFB.

B. The format of each bid must contain the following elements organized into separate chapters and sections, as the Bidder may deem appropriate. The following paragraphs provide guidelines to each Bidder for information to include in the bid document:

C. **Cover Letter** - Provide a cover letter that confirms the Bidder's understanding of this IFB, a general understanding of the Project, an overview of the history and qualifications of the Contractor.

D. **Overview** - The purpose of this section is to provide Fluvanna County with an overview of the history, qualifications and abilities of the Contractor's firm and for the Contractor to demonstrate the specific qualifications of the staff the Contractor will assign to this Project if selected. At a minimum, the proposal should: (i) Designate a Project Manager and indicate office location; and (ii) Include the organization chart, functional discipline, and responsibilities of Project team members.

E. **Resumes/Qualifications** - Provide a concise resume or description of each team member's education, relevant professional experience, length of time employed by the Contractor and/or sub-consultant, and professional licenses. Each Contractor submitting a proposal shall provide an updated statement of qualifications highlighting the expertise and experience of the Contractor and its personnel related to the Project.

F. **Demonstrated History of Successful Projects** - Discuss recent project information of similar type to the Project completed by the Contractor including the project name, location, brief description of the project, description of the scope of services provided, and principal contact person. List all work of a similar nature to the Project completed for any department or agency of the Commonwealth of Virginia and any Virginia public body or locality.

G. **Proposed Sub-Consultants** - The Contractor shall clearly state whether it is proposing to subcontract any of the work herein. The names of all proposed sub-contractors shall be provided. By proposing such firm(s) or individuals, the Contractor assumes full liability for the sub-consultant's performance. The Contractor shall state the amount of previous work experience with the sub-consultant(s).

H. **References:** Provide the current name, address, and telephone number of at least five (5) references the Contractor has served either currently or in the past three (3) years; preferably those where one or more of the Project team members provided the same or similar services as requested herein. Indicate the Scope of Services provided to each reference.

I. **Pricing** – Notwithstanding any other provision contained herein or in any exhibit hereto, please provide flat lump sum pricing. The lump sum price shall include all labor, materials, services, equipment, tools, consumables, parts, supervision, permitting, overhead, administrative, overhead, delivery, shipping, handling, travel and other costs, fees or charges of any kind related to or required for the Work on the Project.

J. **Project Full Specifications** – Must meet all Plans and Specifications contained herein.

K. **Forms:** All forms required to be submitted under this IFB must be included in the Bid, including without limitation,

i. Vendor Data Sheet (Attachment A)
ii. Proof of Authority to Transact Business in Virginia (Attachment B)
iii. Certificate of No Collusion (Attachment C)
iv. Bidder Statement (Attachment D); and
v. Any forms required by the Plans and Specifications

L. The County is not responsible for failure to locate, consider and evaluate qualification factors presented outside this format.

M. Any information thought to be relevant, but not applicable to the enumerated scope of work, should be provided as an appendix to the bid. If publications are supplied by the Officer to respond to a requirement, the response should include reference to the document number and page number. Bids not providing this reference may be considered to have no reference material included in the additional documents.

N. Each Contractor submitting a bid shall provide an updated statement of qualifications. The following is the minimum to be considered a complete bid:

i. Expertise and experience of the Contractor related to the scope of services contained in this IFB. This section shall include recent project information of similar type completed by the Contractor along with the name and telephone number of the point of contact for each project.
ii. Financial responsibility of the Contractor.
iii. The Contractor should include a street address of the office proposed to handle the work.
iv. Identification and statement of qualifications of the construction project team who will be assigned to the Project for actual "hands on" work, as well as the principal assigned the Project for oversight responsibilities.
v. Provide your proposed Project timeline/completion schedule.

O. The County is not responsible for failure to locate, consider and evaluate qualification factors presented outside this format.

6. SUBMITTAL INSTRUCTIONS

A. **Each Bidder must submit one (1) original and four (4) copies along with one (1) electronic copy of its bid documents on CD ROM, DVD, or USB flash drive/memory stick.**

B. An authorized representative of the Bidder shall sign bid documents. All information requested should be submitted. Failure to submit all information requested may result in the bid being rejected by the County.

C. All forms attached to this IFB must be fully completed, executed by the Bidder and returned as a part of Contactor's Bid.

D. **Each bid shall be in writing and received in hard copy by the deadline. Oral bids, bids received by telephone, fax, telegraph, or email shall be rejected.**

7. **CONTRACT AWARD:** The contract will be awarded to the lowest responsible and responsive bidder whose bid, conforming to this IFB, is most advantageous to the County, considering price and any other evaluation criteria set forth in the bid documents and consistent with the Virginia Procurement Act, the County's Code, the County's Procurement Policies and Procedures and other applicable law. Nothing herein requires that the County complete this Work and the County may determine not to award any Contract pursuant to this IFB in its sole discretion for any reason or no reason at all.

8. **TERMS**

A. The County's General Terms, Conditions, and Instructions to Bidders and Contractors are attached hereto and incorporated herein by reference as Appendix I. These provisions bind all Bidders. Further, the conditions and requirements of this IFB, including, but not limited to, County's General Terms, Conditions, and Instructions to Bidders and Contractors, are a material part of any contract awarded between the County and the successful Bidder(s).

B. Awards shall be made to as many Bidders as deemed necessary to fulfill the anticipated requirements of the County. The County may award contracts to multiple Bidders and use their services for some or all of the projects identified herein. The County may choose not to award a contract or Notice to Proceed for any or all projects described herein.

C. The Contract awarded hereunder shall be in a form similar to that Agreement attached herein and referenced in Article 2(G) and acceptable to the County in its sole discretion.

VENDOR DATA SHEET

Note: The following information is required as part of your response to this solicitation. Failure to complete and provide this sheet may result in finding your bid nonresponsive.

1. Qualification: The vendor must have the capability and capacity in all respects to satisfy fully all of the contractual requirements.

2. Vendor's Primary Contact:
Name: _____ Phone: _____

3. Years in Business: Indicate the length of time you have been in business providing this type of good or service: _____ Years _____ Months

4. Vendor Information:
FIN or FEI Number: _____ If Company, Corporation, or Partnership
SSN: _____ (If Vendor is a sole proprietor)

5. Indicate below a listing of at least four (4) current or recent accounts, either commercial or governmental, that your company is servicing, has serviced, or has provided similar goods. Include the length of service and the name, address, and telephone number of the point of contact.

Company:	Contact:
Phone:	Email:
Dates of Service:	$$ Value:

Company:	Contact:
Phone:	Email:
Dates of Service:	$$ Value:

Company:	Contact:
Phone:	Email:
Dates of Service:	$$ Value:

Company:	Contact:
Phone:	Email:
Dates of Service:	$$ Value:

By my signature below, I, as a duly authorized representative of the entity named below, certify the accuracy of the foregoing information:

_____ Date: _____
Legal Name of Entity if Applicable

By: _____ (SEAL) Print Name: _____
Signature of Authorized Representative

Print Title: _____

Vendor Certification (for a Sole Proprietor):

_____ (SEAL) Print Name: _____ Date: _____
Signature

PLEASE RETURN THIS PAGE WITH PROPOSAL SUBMISSION – [REQUIRED]

PROOF OF AUTHORITY TO TRANSACT BUSINESS IN VIRGINIA

THIS FORM MUST BE SUBMITTED WITH YOUR PROPOSAL/BID. FAILURE TO INCLUDE THIS FORM MAY RESULT IN REJECTION OF YOUR PROPOSAL/BID

Pursuant to Virginia Code §2.2-4311.2, an Offeror/Bidder organized or authorized to transact business in The Commonwealth pursuant to Title 13.1 or Title 50 of the Code of Virginia shall include in its proposal/bid the identification number issued to it by the State Corporation Commission ("SCC"). Any Offeror/Bidder that is not required to be authorized to transact business in the Commonwealth as a foreign business entity under Title 13.1 or Title 50 of the Code of Virginia or as otherwise required by law shall include in its proposal/bid a statement describing why the Offeror/Bidder is not required to be so authorized. Any Offeror/Bidder described herein that fails to provide the required information shall not receive an award unless a waiver of this requirement and the administrative policies and procedures established to implement this section is granted by the County Administrator, as applicable. If this quote for goods or services is accepted by the County of Fluvanna, Virginia, the undersigned agrees that the requirements of the Code of Virginia Section 2.2-4311.2 have been met.

Please complete the following by checking the appropriate line that applies and providing the requested information. ***PLEASE NOTE: The SCC number is NOT your federal ID number or business license number.***

A._____ Offeror/Bidder is a Virginia business entity organized and authorized to transact business in Virginia by the SCC and such vendor's Identification Number issued to it by the SCC is _____.

B._____ Offeror/Bidder is an out-of-state (foreign) business entity that is authorized to transact business in Virginia by the SCC and such vendor's Identification Number issued to it by the SCC is _____.

C._____ Offeror/Bidder does not have an Identification Number issued to it by the SCC and such vendor is not required to be authorized to transact business in Virginia by the SCC for the following reason(s): **Please attach additional sheets if you need to explain why such Offeror/Bidder is not required to be authorized to transact business in Virginia.**

Legal Name of Company (as listed on W-9): _____
Legal Name of Offeror/Bidder: _____
Date: _____
Authorized Signature: _____
Print or Type Name and Title: _____

PLEASE RETURN THIS PAGE WITH PROPOSAL SUBMISSION – [REQUIRED]

CERTIFICATE OF NO COLLUSION:

The undersigned, acting on behalf of _____, does hereby certify in connection with the procurement and proposal to which this Certificate of No Collusion is attached that:

This proposal is not the result of, or affected by, any act of collusion with another person engaged in the same line of business or commerce; nor is this proposal the result of, or affected by, any act of fraud punishable under Article 1.1 of Chapter 12 of Title 18.1 of the Code of Virginia, 1950, as amended (18.2-498.1 et seq.).

The undersigned declares that the person or persons signing this proposal is/are fully authorized to sign the proposal on behalf of the firm listed and to fully bind the firm listed to all conditions and provisions thereof.

Respectfully submitted this _____ day of _____, 2015.

_____
Legal Name of Entity

By: _____ (SEAL)
Signature of Authorized Representative

Print Name: _____

Print Title: _____

Date: _____

ACKNOWLEDGEMENT

State of _____
In the County/City of _____, **to-wit:**

The foregoing Certification of No Collusion was subscriber and sworn to before me by_____ (Print Name), _____ (Print Title) on behalf of _____ (Print Name of Entity) on this _____ day of _____ (month), _____ (year).

_____
Notary Public

My commission expires: _____

Registration Number: _____

PLEASE RETURN THIS PAGE WITH PROPOSAL SUBMISSION – [REQUIRED]

OFFEROR STATEMENT

The undersigned Offeror hereby certifies that the Offeror has carefully examined all instructions, plans, conditions, specifications and other documents or items of this Request for Proposal and hereby submits this Proposal pursuant to such instructions, plans, conditions, specifications and other documents or items.

Complete if Offeror is an Entity:

WITNESS the following duly authorized signature and seal:

Name of Entity: _____
By: _____ (SEAL)
Signature
Print Name: _____
Print Title: _____

STATE OF _____
COUNTY/CITY OF _____, to-wit:

The foregoing instrument was acknowledged before me this _____ day of _____ (month), _____ (year) by _____(Print Name), _____(Print Title) on behalf of _____ (Name of Entity).

_____ [SEAL]
Notary Public

My commission expires: _____
Notary registration number: _____

Complete if Offeror is a Sole Proprietor:
Witness the following signature and seal:

_____ (SEAL)
Signature
Print Name: _____

STATE OF _____
COUNTY/CITY OF _____, to-wit:
The foregoing instrument was acknowledged before me this _____ day of _____ (month), _____ (year) by _____ (Print Name), a sole proprietor.

_____ [SEAL]
Notary Public

My commission expires: _____
Notary registration number: _____
PLEASE RETURN THIS PAGE WITH PROPOSAL SUBMISSION – [REQUIRED]

Appendix I

COUNTY OF FLUVANNA

GENERAL TERMS, CONDITIONS AND INSTRUCTIONS TO BIDDERS AND CONTRACTORS

GENERAL TERMS, CONDITIONS AND INSTRUCTIONS TO BIDDERS AND CONTRACTORS

These General Terms, Conditions and Instructions to Bidders and Contractor (hereinafter referred to as the "General Conditions") shall apply to all purchases and be incorporated into and be a part of each Solicitation (as defined below) and every Contract (as defined below) awarded by Fluvanna County, a political subdivision of the Commonwealth of Virginia (hereinafter referred to as the "County") unless otherwise specified by the County in writing. Bidders, Offerors and Contractors or their authorized representatives are expected to inform themselves fully as to these General Conditions before submitting Bids or Proposals to and/or entering into any Contract with the County: failure to do so will be at the Bidder's/Contractor's own risk and except as provided by law, relief cannot be secured on the plea of error.

Subject to all Federal, State and local laws, policies, resolutions, regulations, rules, limitations and legislation, including the County's Procurement Policies and Procedures, Bids or Proposals on all Solicitations issued by County will bind Bidders or Offerors, as applicable, and Contracts will bind Contractors, to all applicable terms, conditions, instructions, rules and requirements herein set forth unless otherwise SPECIFICALLY set forth by the County in writing in the Solicitation or Contract. All provisions of these General Conditions are material to any contract between the County and a Contractor.

INTRODUCTION

1. **VIRGINIA PUBLIC PROCUREMENT ACT AND ETHICS IN PUBLIC CONTRACTING:** The Virginia Public Procurement Act of Virginia Code §§ 2.2-4300 *et seq.* (hereinafter the "VPPA") is incorporated herein by reference. Nothing in these General Conditions is intended to conflict with the VPPA and in case of any conflict, the VPPA controls. Specifically, the provisions of Article 6 of the VPPA (Virginia Code §§ 2.2-4367 through 2.2-4377) relating to ethics in contracting, shall be applicable to all Solicitations and Contracts solicited or entered into by the County. By submitting their Bids or signing any Contract, all Bidders and Contractors certify that they have not violated any of the provisions of Article 6 of the VPPA, including, but not limited to, that their Bids are made without collusion or fraud and that they have not offered or received any kickbacks or inducements.

2. **DEFINITIONS:** The definitions of Virginia Code §§ 2.2-4301, 2.2-4302.1 and 2.2-4302.2 are specifically incorporated herein by reference and as used in these General Conditions, whether capitalized or not, any of such defined terms have the same meaning as such terms have under the VPPA: such defined terms include: "Affiliate", "Best Value", "Business", "Competitive Negotiation", "Competitive Sealed Bidding", "Construction", "Construction Management Contract", "Design-Build Contract", "Employment Services Organization", "Goods", "Informality", "Job Order Contracting", "Multiphase Professional Services Contract", "Nonprofessional Services", "Potential Bidder or Offeror", "Professional Services", "Public Body", "Public Contract", "Responsible Bidder or Offeror", "Responsive Bidder", "Reverse Auctioning" and "Services". Additionally, as used in these General Conditions, the following terms, whether capitalized or not, have the following meanings:

a. Bid/Proposal: The offer of a Bidder or Offeror to provide specific Goods or Services at specified prices and/or other conditions specified in the Solicitation. The term "Bid" is used throughout these General Conditions and where appropriate includes the term "Proposal" or any modifications or amendments to any Bid or Proposal.

b. Bidder/Offeror/Vendor: Any individual(s), company, firm, corporation, partnership or other organization bidding or offering on any Solicitation issued by the County and/or offering to enter into Contracts with the County. The term "Bidder" is used throughout these General Conditions and where appropriate includes the term "Offeror" and/or "Vendor".

c. Contract: Any contract to which the County will be a party.

d. Contractor: Any individual(s), company, firm, corporation, partnership, or other organization to whom an award is made by the County or whom enters into any contract to which the County is a party.

e. County: The County of Fluvanna, a political subdivision of the Commonwealth of Virginia, including where applicable all agencies and departments of the County.

f. County Administrator: The Fluvanna County Administrator.

g. County Attorney: The Fluvanna County Attorney.

h. Purchasing Agent: The County Administrator is the County's Purchasing Agent and is responsible for the purchasing activity of Fluvanna County; and has signatory authority to bind the County to all contracts and purchases made lawfully under the Fluvanna County Small Purchasing Procedures. The Purchasing Agent has signatory authority to bind the County to all other contracts and purchases only after the contracts or purchases have been approved by a vote of the Fluvanna County Board of Supervisors.

i. General Terms, Conditions and Instructions to Bidders and Contractors (also referred to herein as the "General Conditions"): These General Terms, Conditions and Instructions to Bidders and Contractors shall be attached to and made a part of all Solicitations by the County and all Contracts to which the County is party.

j. His: Any references to "his" shall include his, her, their, or its as appropriate.

k. Invitation to Bid (also referred to herein as an "IFB"): A request which is made to prospective Bidders for their quotation on Goods or Services desired by the County. The issuance of an IFB will contain or incorporate by reference the General Conditions and the other specifications and contractual terms and conditions applicable to the procurement.

l. Purchasing Officer: The Purchasing Officer employed by the County and to whom Bidders/Contractors can submit questions relating to any Bid or Contract.

m. Request for Proposal (also referred to herein as a "RFP"): A request for an offer from prospective Offerors which shall indicate the general terms which are sought to be procured from Offerors. The RFP will specify the evaluation factors to be used and will contain or incorporate by reference the General Conditions and other applicable contractual terms and conditions, including any unique capabilities or qualifications that will be required of the Contractor.

n. Small Purchasing Procedures: The County's Small Purchasing Procedures, being Chapter 4 of the County's Procurement Policies and Procedures, a method of purchasing not requiring competitive sealed bids or competitive negotiation for single or term contracts for goods and services other than professional services if the aggregate or the sum of all phases is not expected to exceed $50,000; and also allowing for single or term contracts for professional services without requiring competitive negotiation, provided the aggregate or the sum of all phases is not expected to exceed $50,000.

o. Solicitation: The process of notifying prospective Bidders or Offerors that the County wishes to receive Bids or Proposals on a set of requirements to provide Goods or Services. "Solicitation" includes any notification of the County requirements may consist of public advertising (newspaper, County's website, or other electronic notification), the mailing of notices of Solicitation, any Invitation for Quotes ("IFQ"), Initiations to Bid ("IFB"), or Requests for Proposal ("RFP"), the public posting of notices, issuance of an Open Market Procurement ("OMP"), or telephone calls to prospective Bidders or Offerors.

p. State: The Commonwealth of Virginia.

3. **AUTHORITY:** The Purchasing Agent shall serve as the principal public purchasing official for the County, and shall be responsible for the procurement of goods, services, insurance and construction in accordance with the County's Procurement Policies and Procedures. The Purchasing Agent has responsibility and authority for negotiating, placing and when necessary modifying every Solicitation, Contract and purchase order issued by the County under the County's Small Purchasing Procedures. The Purchasing Agent has signatory authority to bind the County to all contracts and purchases made lawfully under the County's Small Purchasing Procedures. The Purchasing Agent has responsibility and authority for negotiating, placing and when necessary modifying every other Solicitation, Contract and purchase order issued by the County except that the Purchasing Agent has signatory authority to bind the County to all other contracts and purchases ONLY after the contracts or purchases have been adopted and approved by a vote of the Fluvanna County Board of Supervisors (the "Board").

Unless specifically delegated by the Board or the Purchasing Agent, and consistent with the limited authority granted thereto, no other County officer or employee is authorized to order supplies or Services, enter into purchase negotiations or Contracts, or in any way obligate the County for any indebtedness. Any purchase or contract made which is contrary to such authority shall be of no effect and void and the County shall not be bound thereby.

For convenience, the County's Purchasing Officer shall serve as an intermediary between the Purchasing Agent and the Bidder or Contractor and any Bidder or Contractor may direct communications regarding any purchase, Solicitation or Contract to the Purchasing Officer; however as stated *supra* only the Board or County's Purchasing Agent can bind the County and only upon the conditions stated *supra*.

CONDITIONS OF BIDDING

4. **COMPETITION INTENDED:** It is the County's intent to encourage and permit open and competitive bidding in all Solicitations. It shall be the Bidder's responsibility to advise the County in writing if any language, requirement, specification, etc., or any combination thereof, stifles competition or inadvertently restricts or limits the requirements stated in a Solicitation to a single source. The County must receive such notification not later than seven (7) business days prior to the deadline set for acceptance of the Bids. In submitting a Bid, the Bidder guarantees that he or she has not been a party with other Bidders to an agreement to bid a fixed or uniform price. Violation of this implied guarantee shall render the Bid of any Bidder involved void.

5. **DISCRIMINATION PROHIBITED:** Pursuant to Virginia Code § 2.2-4310, the County does not discriminate against Bidders, Offerors or Contractors because of race, religion, color, sex, national origin, age, disability, status as a service disabled veteran, or any other basis prohibited by state law relating to discrimination in employment. Whenever solicitations are made, the County shall include businesses selected from a list made available by the Department of Small Business and Supplier Diversity. Pursuant to Virginia Code § 2.2-4343.1, the County does not discriminate against "faith-based organizations", being a religious organization that is or applies to be a contractor to provide goods or services for programs funded by the block grant provided pursuant to the Personal Responsibility and Work Reconciliation Act of 1996, P.L. 104-193.

6. **CLARIFICATION OF TERMS:** Pursuant to Virginia Code § 2.2-4316, if any Bidder has questions or comments about the specifications or other Solicitation documents, the prospective Bidder should contact the County no later than seven (7) business days prior to the date set for the opening of Bids or receipt of Proposals. Any revisions to the Solicitation will be made only by written addendum issued by the County. Notifications regarding specifications may not be considered if received in less than seven (7) business days of the date set for opening of Bids/receipt of Proposals.

7. **MANDATORY USE OF COUNTY FORM AND TERMS AND CONDITIONS:** Unless otherwise specified in the Solicitation, all Bids must be submitted on the forms provided by the County, including but not limited to, a Cover Sheet or Pricing Schedule, if applicable, properly signed in ink in the proper spaces and submitted in a sealed envelope or package. Unauthorized modification of or additions to any portion of the Solicitation may be cause for rejection of the Bid. However, the County reserves the right to decide, on a case by case basis, in its sole discretion, whether to reject any Bid or Proposal which has been modified.

These General Conditions are mandatory provisions of all Solicitations and all Contracts of the County.

8. **LATE BIDS & MODIFICATION OF BIDS:** Any Bid or modification thereto received at the office designated in the Solicitation after the exact time specified for receipt of the Bid is considered a late Bid or modification thereof. The County is not responsible for delays in the delivery of the mail by the U.S. Postal Service, private carriers or the inter-office mail system. It is the sole responsibility of the Bidder to ensure their Bid reaches County by the designated date and hour. The following rules apply to all Bids submitted to the County:

    a. The official time used in the receipt of Bids/Proposals is that time on the automatic time stamp machine in the Finance Department;
    b. Late Bids or modifications thereof will be returned to the Bidder UNOPENED, if Solicitation number, due date and Bidder's return address is shown on the container;
    c. If a Bid is submitted on time, however a modification thereto is submitted after the due date and time, then the County in its sole discretion may choose to consider the original Bid except that the County may not consider such original Bid if the Bid is withdrawn by the Bidder pursuant to Section 9 below; and
    d. If an emergency or unanticipated event or closing interrupts or suspends the County's normal business operations so that Bids cannot be received by the exact time specified in the Solicitation, then the due date/time specified for receipt of Bids will be deemed to be extended to the same time of day specified in the Solicitation on the first work day on which normal County business operations resume.

9. **WITHDRAWAL OF BIDS:**

    a. Pursuant to Virginia Code § 2.2-4330, a Bidder for a public construction contract, other than a contract for construction or maintenance of public highways, may withdraw his Bid from consideration if the price bid was substantially lower than the other Bids due solely to a mistake in the Bid, provided the Bid was submitted in good faith, and the mistake was a clerical mistake as opposed to a judgment mistake, and was actually due to an unintentional arithmetic error or an unintentional omission of a quantity of work, labor or material made directly in the compilation of a Bid, which unintentional arithmetic error or unintentional omission can be clearly shown by objective evidence drawn from inspection of original work papers, documents and materials used in the preparation of the Bid sought to be withdrawn.

    If a Bid contains both clerical and judgment mistakes, a Bidder may withdraw his Bid from consideration if the price bid would have been substantially lower than the other Bids due solely to the clerical mistake, that was an unintentional arithmetic error or an unintentional omission of a quantity of work, labor or material made directly in the compilation of a Bid that shall be clearly shown by objective evidence drawn from inspection of original work papers, documents and materials used in the preparation of the Bid sought to be withdrawn. The Bidder shall give notice in writing to the County of his or her claim of right to withdraw his or her Bid within two (2) business days after the conclusion of the Bid opening procedure and shall submit original work

papers with such notice.

b. A Bidder for a Contract other than for public construction may request withdrawal of his or her Bid under the following circumstances:

   i. Bids may be withdrawn on written request from the Bidder received at the address shown in the Solicitation prior to the time of opening.
   ii. Requests for withdrawal of Bids after opening of such Bids but prior to award shall be transmitted to the County, in writing, accompanied by full documentation supporting the request. If the request is based on a claim of error, documentation must show the basis of the error. Such documentation may take the form of supplier quotations, Bidder work sheets, etc. If Bid bonds were tendered with the Bid, the County may exercise its right of collection.

c. No Bid may be withdrawn under this Section 9 when the result would be the awarding of the Contract on another Bid of the same Bidder or of another Bidder in which the ownership of the withdrawing Bidder is more than five percent (5%).

d. If a Bid is withdrawn under the authority of this Section 9 the lowest remaining Bid shall be deemed to be the low Bid.

e. No Bidder who, is permitted to withdraw a Bid shall, for compensation, supply any material or labor to or perform any subcontract or other work agreement for the person or firm to whom the Contract is awarded or otherwise benefit, directly or indirectly, from the performance of the project for which the withdrawn Bid was submitted.

f. The County shall notify the Bidder in writing within five (5) business days of its decision regarding the Bidder's request to withdraw its Bid. If the County denies the withdrawal of a Bid under the provisions of this Section 9, it shall State in such notice the reasons for its decision and award the Contract to such Bidder at the Bid price, provided such Bidder is a responsible and responsive Bidder. At the same time that the notice is provided, the County shall return all work papers and copies thereof that have been submitted by the Bidder.

g. Under these procedures, a mistake shall be proved only from the original work papers, documents and materials delivered as required herein. The work papers, documents and materials submitted by the bidder shall, at the bidder's request, be considered trade secrets or proprietary information subject to the conditions of subsection F of Virginia Code § 2.2-4342.

10. ERRORS IN BIDS: When an error is made in extending total prices, the unit Bid price will govern. Erasures in Bids must be initialed by the Bidder. Carelessness in quoting prices, or otherwise in preparation of the Bid, will not relieve the Bidder. Bidders/Offerors are

cautioned to recheck their Bids for possible error. Errors discovered after public opening cannot be corrected and the Bidder will be required to perform if his or her Bid is accepted.

11. **IDENTIFICATION ON BID ENVELOPE:** All Bids, Proposals and requested copies thereof submitted to the County shall be in a separate envelope or package, sealed and identified with the following information clearly marked on the outside of the envelope or package:

    a. Addressed as indicated on page 1 of the solicitation;
    b. Solicitation number;
    c. Title;
    d. Bid due date and time;
    e. Bidder's name and complete mailing address (return address); and
    f. Pursuant to Virginia Code § 2.2-4311.2, the Bidder's identification number issued by the State Corporation Commission, or if the bidder is not required to be authorized to transact business in the Commonwealth as a foreign business entity under Title 13.1 or Title 50 or as otherwise required by law shall include in its bids or proposal a statement describing why the bidder or offeror is not required to be so authorized.

    If a Bid is not addressed with the information as shown above, the Bidder takes the risk that the envelope may be inadvertently opened and the information compromised, which may cause the Bid to be disqualified. Bids may be hand delivered to the designated location in the County's offices. No other correspondence or other Proposals/Bids should be placed in the envelope. Any Bidder or Offeror that fails to provide the information required in (f) above shall not receive an award unless a waiver is specifically granted by the County Administrator.

12. **ACCEPTANCE OF BIDS:** Unless otherwise specified, all formal Bids or Proposals submitted shall be valid for a minimum period of one hundred twenty (120) calendar days following the date established for opening or receipt, respectively, unless extend by mutual agreement of the parties. At the end of the one hundred twenty (120) calendar days the Bid/Proposal may be withdrawn at the written request of the Bidder. Thereafter, unless and until the Proposal is withdrawn, it remains in effect until an award is made or the Solicitation is canceled by the County. The County may cancel any Solicitation at any time by notice of such cancelation to the Bidders.

13. **COMPLETENESS:** To be responsive, a Bid must include all information required by the Solicitation.

14. **CONDITIONAL BIDS:** Conditional Bids are subject to rejection in whole or in part.

15. **RESPONSE TO SOLICITATIONS**: In the event a Bidder cannot submit a Bid on a Solicitation, the Bidder is requested to return the Solicitation cover sheet with an explanation as to why the Bidder is unable to Bid on these requirements, or if there be no cover sheet for the Solicitation a letter to the County explaining the same.

16. **BIDDER INTERESTED IN MORE THAN ONE BID AND COLLUSION:** More than one bid from an individual, firm, partnership, corporation or association under the same or different name will be rejected. Reasonable grounds for believing that a bidder is interested in more than one bid for the work contemplated will cause rejection of all bids in which the bidder is interested. Any or all bids may be rejected if there is any reason for believing that collusion exists among the bidders. Participants in such collusion may not be considered in future bids for the same work. Each bidder, as a condition of submitting a bid, shall certify that he is not a party to any collusive action as herein defined. However, a party who has quoted prices on work, materials, or supplies to a Bidder is not thereby disqualified from quoting prices to other Bidders or firms submitting a Bid directly for the work, materials or supplies.

17. **BID OPENING:** Pursuant to Virginia Code § 2.2-4301, all Bids received in response to an IFB will be opened at the date, time and place specified, and announced publicly, and made available for inspection as provided in Section 21 of these General Conditions. Proposals received in response to an RFP will be made available for inspection as provided in Section 21 of these General Conditions.

18. **TAX EXEMPTION:** The County is exempt from the payment of any federal excise or any Virginia sales tax. The price bid must be net, exclusive of taxes. Tax exemption certificates will be furnished if requested by the Bidder.

19. **DEBARMENT STATUS:** By submitting their Bids, Bidders certify that they are not currently debarred from submitting Bids on Contracts by the County, nor are they an agent of any person or entity that is currently debarred from submitting Bids or Proposals on Contracts by the County or any agency, public entity/locality or authority of the State.

20. **NO CONTACT POLICY:** No Bidder shall initiate or otherwise have contact related to the Solicitation with any County representative or employee, other than the Purchasing Officer or Purchasing Agent, after the date and time established for receipt of Bids. Any contact initiated by a Bidder with any County representative, other than the Purchasing Officer or Purchasing Agent, concerning this Solicitation is prohibited and may cause the disqualification of the Bidder.

21. **VIRGINIA FREEDOM OF INFORMATION ACT**: As provided under Virginia Code § 2.2-4342, all proceedings, records, Contracts and other public records relating to procurement transactions shall be open to the inspection of any citizen, or any interested person, firm or corporation, in accordance with the Virginia Freedom of Information Act of Virginia Code §§ 2.2-3700 *et seq.*, except:

a. Cost estimates relating to a proposed procurement transaction prepared by or for the County shall not be open to public inspection;
b. Any competitive sealed bidding Bidder, upon request, shall be afforded the opportunity to inspect Bid records within a reasonable time after the opening of Bids but prior to award, except in the event that the County decides not to accept any of the Bids and to reopen the Contract. Otherwise, Bid records shall be open to public inspection only after award of the Contract;
c. Any competitive negotiation Offeror, upon request, shall be afforded the opportunity to inspect Proposal records within a reasonable time after the evaluation and negotiations of Proposals are completed but prior to award except in the event that the County decides not to accept any of the Proposals and to reopen the Contract. Otherwise, Proposal records shall be open to the public inspection only after award of the Contract;
d. Any inspection of procurement transaction records under this Section 21 shall be subject to reasonable restrictions to ensure the security and integrity of the records;
e. Trade secrets or proprietary information submitted by a Bidder, Offeror or Contractor in connection with a procurement transaction shall not be subject to public disclosure under the Virginia Freedom of Information Act; however, the Bidder, Offeror or Contractor must invoke the protections of this Section 21 prior to or upon submission of the data or other materials, and must identify the data or other materials to be protected and State the reasons why protection is necessary; and
f. Nothing contained in this Section 21 shall be construed to require the County, when procuring by "competitive negotiation" (RFP), to furnish a Statement of reasons why a particular Proposal was not deemed to be the most advantageous to the County.

22. CONFLICT OF INTEREST: Bidder/Contractor certifies by signing any Bid/Contract to/with the County that no conflict of interest exists between Bidder/Contractor and County that interferes with fair competition and no conflict of interest exists between Bidder/Contractor and any other person or organization that constitutes a conflict of interest with respect to the Bid/Contract with the County.

SPECIFICATIONS

23. OMISSIONS OR DISCREPANCIES: Any items or parts of any equipment listed in a Solicitation which are not fully described or are omitted from such specification, and which are clearly necessary for the completion of such equipment and its appurtenances, shall be considered a part of such equipment although not directly specified or called for in the specifications. Should a Bidder find a discrepancy or ambiguity in, or an omission from, the Solicitation, including the drawings and/or specifications, he or she shall so notify the County within twenty-four (24) hours of noting the discrepancy, ambiguity or omission and in any

event no less than five (5) days prior to the date set for the opening of Bids. If necessary, the County will send a written addendum for clarification to all Bidders no later than three (3) days before the date set for opening of Bids. Any notification regarding specifications received less than five (5) days prior to the date set for the opening of Bids may or may not be considered by the County in its sole discretion. The Bidder shall abide by and comply with the true intent of the specifications and not take advantage of any unintentional error or omission, but shall fully complete every part as the true intent and meaning of the specifications and drawings. Whenever the mention is made of any articles, material or workmanship to be in accordance with laws, ordinances, building codes, underwriter's codes, A.S.T.M. regulations or similar expressions, the requirements of these laws, ordinances, etc., shall be construed as to the minimum requirements of these specifications.

24. **BRAND NAME OR EQUAL ITEMS:** Pursuant to Virginia Code § 2.2-4315, unless otherwise provided in the Solicitation, the name of a certain brand, make or manufacturer does not restrict Bidders to the specific brand, make or manufacturer named; it conveys the general style, type, character, and quality of the article desired, and any article which the County in its sole discretion determines to be the equal of that specified, considering quality, workmanship, economy of operation, and suitability for the purpose intended, shall be accepted. The Bidder is responsible to clearly and specifically indicate the product being offered and to provide sufficient descriptive literature, catalog cuts and technical detail to enable the County to determine if the product offered meets the requirements of the Solicitation. This is required even if offering the exact brand, make or manufacturer specified. Normally in competitive sealed bidding, only the information furnished with the Bid will be considered in the evaluation. Failure to furnish adequate data for evaluation purposes may result in declaring a Bid non-responsive. Unless the Bidder clearly indicates in its Bid that the product offered is "equal" product, such Bid will be considered to offer the brand name product referenced in the Solicitation.

25. **FORMAL SPECIFICATIONS:** When a Solicitation contains a specification which states no substitutes, no deviation therefrom will be permitted and the Bidder will be required to furnish articles in conformity with that specification.

26. **CONDITION OF ITEMS:** Unless otherwise specified in the Solicitation, all items shall be new, in first class condition.

AWARD

27. **RESPONSIBLE BIDDERS:** In determining whether a Bidder is a responsible Bidder as defined herein, at minimum, the following criteria will be considered:

a. The ability, capacity and skill of the Bidder to perform the Contract or provide the service required under the Solicitation;
b. Whether the Bidder can perform the Contract or provide the service promptly, or within the time specified, without delay or interference;
c. The character, integrity, reputation, judgment, experience and efficiency of the Bidder;
d. The quality of performance of previous Contracts or Services;
e. The previous and existing compliance by the Bidder with laws and ordinances relating to the Contract or Services;
f. The sufficiency of the financial resources and ability of the Bidder to perform the Contract or provide the service;
g. The quality, availability and adaptability of the Goods or Services to the particular use required;
h. The ability of the Bidder to provide future maintenance and service for the use of the subject of the Contract;
i. The number and scope of the conditions attached to the Bid;
j. Whether the Bidder is in arrears to the County on debt or Contract or is a defaulter on surety to the County or whether the Bidder's County taxes or assessments are delinquent; and
k. Such other information as may be secured by the County, the Purchasing Agent or the Purchasing Officer having a bearing on the decision to award the Contract. If an apparent low Bidder is not awarded a Contract for reasons of nonresponsibility, the County shall so notify that Bidder and shall have recorded the reasons in the Solicitation or Contract file.

28. AWARD OR REJECTION OF BIDS; WAIVER OF INFORMALITIES: The County shall award the Contract to the lowest responsive and responsible Bidder complying with all provisions of the IFB, provided the Bid price is reasonable and it is in the best interest of the County to accept it. Awards made in response to a RFP will be made to the highest qualified Offeror whose Proposal is determined, in writing, to be the most advantageous to the County taking into consideration the evaluation factors set forth in the RFP. The County reserves the right to award a Contract by individual items, in the aggregate, or in combination thereof, or to reject any or all Bids and to waive any informality in Bids received whenever such rejection or waiver is in the best interest of the County. Award may be made to as many Bidders/Offerors as deemed necessary to fulfill the anticipated requirements of the County. The County also reserves the right to reject the Bid if a Bidder is deemed to be a non-responsible Bidder. Pursuant to Virginia Code § 2.2-4319, an IFB, a RFP, any other solicitation, or any and all bids or proposals, may be canceled or rejected by the County at any time. The reasons for cancellation or rejection shall be made part of the contract file. The County shall not cancel or reject an IFB, a RFP, any other solicitation, bid or proposal solely to avoid awarding a contract to a particular responsive and responsible bidder or offeror.

29. **EXCLUSION OF INSURANCE BIDS PROHIBITED:** Pursuant to Virginia Code § 2.2-4320, notwithstanding any other provision of law or these General Conditions, no insurer licensed to transact the business of insurance in the State or approved to issue surplus lines insurance in the State shall be excluded from presenting an insurance bid proposal to the County in response to a RFP or an IFB; excepting that the County may debar a prospective insurer pursuant to its Debarment Policy, see Chapter 2 of the County's Procurement Policies and Procedures.

30. **ANNOUNCEMENT OF AWARD:** Upon the award or announcement of the decision to award a Contract as a result of this Solicitation, the County will publicly post such notice on the County's bulletin board located at 72 Main Street, 2nd Floor, Palmyra, Virginia 22963. Award results may also be viewed on the County's website.

31. **QUALIFICATIONS OF BIDDERS OR OFFERORS:** The County may make such reasonable investigations as deemed proper and necessary to determine the ability of the Bidder to perform the work/furnish the item(s) and the Bidder shall furnish to the County all such information and data for this purpose as may be requested. The County reserves the right to inspect Bidder's physical facilities prior to award to satisfy questions regarding the Bidder's capabilities. The County further reserves the right to reject any Bid or Proposal if the evidence submitted by or investigations of, such Bidder fails to satisfy the County that such Bidder is properly qualified to carry out the obligations of the Contract and to complete the work/furnish the item(s) contemplated therein.

32. **TIE BIDS AND PREFERENCE FOR VIRGINIA PRODUCTS WITH RECYCLED CONTENT AND FOR VIRGINIA FIRMS**:

    a. Pursuant to Virginia Code § 2.2-4328, in the case of a tie bid on an IFB only, the County may give preference to Goods, Services and construction produced in Fluvanna County or provided by persons, firms or corporations having principal places of business in Fluvanna County. If such choice is not available, preference shall then be given to Goods produced in Virginia, or for goods, services or construction provided by Virginia persons, firms, corporations, pursuant Virginia Code § 2.2-4324. If no County or State choice is available, the tie shall be decided publicly by lot. The decision by the County to make award to one or more such Bidders shall be final.
    b. Whenever the lowest responsive and responsible bidder is a resident of any other state and such state under its laws allows a resident contractor of that state a percentage preference, a like preference shall be allowed to the lowest responsive and responsible bidder who is a resident of Virginia and is the next lowest bidder. If the lowest responsive and responsible bidder is a resident of any other state and such state under its laws allows a resident contractor of that state a price-matching preference, a like preference shall be allowed to responsive and responsible bidders who are residents of Virginia. If the lowest bidder is a resident contractor of a state with an absolute preference, the bid shall not be considered. The Department of General Services shall post and maintain an updated list on its website of all states with an absolute preference for their resident contractors and those states that allow their resident contractors a percentage preference, including the respective percentage amounts. For

purposes of compliance with this Section 32, the County may rely upon the accuracy of the information posted on this website.

c. Notwithstanding the provisions of subsections a and b, in the case of a tie bid in instances where goods are being offered, and existing price preferences have already been taken into account, preference shall be given to the bidder whose goods contain the greatest amount of recycled content.

d. For the purposes of this Section 32, a Virginia person, firm or corporation shall be deemed to be a resident of Virginia if such person, firm or corporation has been organized pursuant to Virginia law or maintains a principal place of business within Virginia.

33. NEGOTIATION WITH LOWEST RESPONSIBLE BIDDER: Pursuant to Virginia Code § 2.2-4318, unless cancelled or rejected, a responsive Bid from the lowest responsible Bidder shall be accepted as submitted, except that if the Bid from the lowest responsible Bidder exceeds available funds, the County may negotiate with the apparent low Bidder to obtain a Contract price within available funds. However, the negotiation may be undertaken only under conditions and procedures described in writing and approved by the County prior to issuance of the IFB and summarized therein.

CONTRACT PROVISIONS

34. APPLICABLE LAW AND COURTS: Any Bid or Contract resulting from a Solicitation and its terms, including, but not limited to, the parties' obligations under it, and the remedies available to each party for breach of it, shall be governed by, construed and interpreted in accordance with the laws of the Commonwealth of Virginia, and exclusive jurisdiction and venue of any dispute or matters involving litigation between the parties hereto shall be in the courts of Fluvanna County, Virginia. Any jurisdiction's choice of law, conflict of laws, rules, or provisions, including those of the Commonwealth of Virginia, that would cause the application of any laws other than those of the Commonwealth of Virginia, shall not apply. The Contractor shall comply with applicable federal, State and local laws, ordinances, rules and regulations in performance of the Contract.

35. PROVISION AND OWNERSHIP OF INFORMATION: The County shall make a good faith effort to identify and make available to the Contractor all non-confidential technical and administrative data in the County's possession which the County may lawfully release including, but not limited to Contract specifications, drawings, correspondence, and other information specified and required by the Contractor and relating to its work under any Contract. The County reserves its rights of ownership to all material given to the Contractor by the County and to all background information documents, and computer software and documentation developed by the Contractor in performing any Contract.

36. DOCUMENTS: All documents, including but not limited to data compilations, drawings, reports and other material, whether in hard copy or electronic format, prepared, developed or

furnished by the Contractor pursuant to any Contract shall be the sole property of the County. At the direction of the County, the Contractor shall have the right to make copies of the documents produced available to other parties. The County shall be entitled to delivery of possession of all documents, upon payment in accordance with the terms of any Contract for the service incurred to produce such documents.

37. **CONFIDENTIALITY:** Contractor shall not publish, copyright or otherwise disclose or permit to be disclosed or published, the results of any work performed pursuant to this contract, or any particulars thereof, including forms or other materials developed for the County in connection with the performance by Contractor of its services hereunder, without prior written approval of the County. Contractor, cognizant of the sensitive nature of much of the data supplied by the County, shall not disclose any information (other than information which is readily available from sources available to the general public) obtained by it in the course of providing services hereunder without the prior written approval of the County, unless disclosure of such information by it is required by law, rule or regulation or the valid order of a court or administrative agency.

38. **INDEPENDENT CONTRACTOR:** The Contractor and any agents, or employees of the Contractor, in the performance of any Contract shall act as an independent contractor and not as officers, employees or agents of the County.

39. **INSURANCE:** The Contractor agrees that, during the period of time it renders services to the County pursuant to any Contract, it shall carry (and provide the County with evidence of coverage) the following minimum amounts of insurance:

Automobile	$500,000	Liability Medical Payment Comprehensive Collision
Public Liability	$1,000,000	
Professional Liability	$1,000,000	
Excess Liability	$2,000,000	Aggregate Over Above Policy Limits (Excluding Professional Liability)
Worker's Compensation	Amount required by Virginia law	

The Contract may specifically require the Contractor to carry higher minimum amounts of insurance.

In addition, the Contractor shall require, and shall include in every subcontract, that any subcontractor providing any goods or services related to such Contract obtain, and continue to maintain for the duration of the work, workers' compensation coverage in the amount required by Virginia law.

40. **KEY PERSONNEL:** For the duration of any Contract, the Contractor shall make no substitutions of key personnel unless the substitution is necessitated by illness, death, or termination of employment, or as expressly approved by the County. The Contractor shall notify the County within five (5) calendar days after the occurrence of any of these events and provide the information required by the paragraph below.

    The Contractor shall provide a detailed explanation of the circumstances necessitating any proposed substitution, complete resumes for the proposed substitute, and any additional information requested by the County. The proposed substitute should have comparable qualifications to those of the person being replaced. The County will notify the Contractor within fifteen (15) calendar days after receipt of all required information of its approval or disapproval of the proposed substitution.

41. **SEVERABILITY:** If any term, covenant or provision of these General Conditions or any Contract shall be held to be invalid, illegal or unenforceable in any respect, these General Conditions and any Contract shall remain in effect and be construed without regard to such provision.

42. **TITLES:** The titles and section headings herein and in any Contract are inserted solely for convenience and are not to be construed as a limitation on the scope of the provisions to which they refer.

43. **ATTORNEYS' FEES:** In the event of a dispute between the County and Contractor under any Contract which cannot be amicably resolved, in addition to all other remedies, the party substantially prevailing in any litigation shall be entitled to recover its reasonable expenses, including, but not limited to, reasonable attorneys' fees.

44. **NO WAIVER:** Neither any payment for, nor acceptance of, the whole or any part of the services by the County, nor any extension of time, shall operate as a waiver of any provision of any Contract, nor of any power herein reserved to the County, or any right to damages herein provided, nor shall any waiver of any breach of any Contract be held to be a waiver of any other or subsequent breach. Failure of the County to require compliance with any term or condition of any Contract shall not be deemed a waiver of such term or condition or a waiver of the subsequent enforcement thereof.

45. **NO FINANCE CHARGES:** No finance charges shall be paid by the County.

46. **ANTITRUST**: By entering into a Contract, the Contractor conveys, sells, assigns, and transfers to the County all rights, title and interest in and to all causes of the action it may now have or hereafter acquire under the antitrust law of the United States or the State, relating to the particular Goods or Services purchased or acquired by the County under said Contract.

Consistent and continued tie bidding could cause rejection of Bids by the County and/or investigation for antitrust violations.

47. PAYMENT: Pursuant to Virginia Code § 2.2-4352, unless more time is provided in the Solicitation or Contract, payment will be made forty-five (45) days after receipt by the County of a proper invoice, or forty-five (45) days after receipt of all Goods or acceptance of work, whichever is later. The County reserves the right to withhold any or all payments or portions thereof for Contractor's failure to perform in accordance with the provision of the Contract or any modifications thereto. Within twenty (20) days of receipt of proper invoice or of goods or services, the County shall notify the Contractor if any defect or impropriety that would prevent payment by the payment date. The following provisions apply to such payments:

a. Invoices for items/Services ordered, delivered/performed and accepted shall be submitted by the Contractor in duplicate directly to the payment address shown on the purchase order, Solicitation or Contract, as applicable. All invoices shall show the Contract number, purchase order number, or Solicitation number, as applicable, and as required under Virginia Code § 2.2-4354, either the individual Contractor's social security number or the Contractor's federal employer identification number, whichever is applicable.

b. Any payment terms requiring payment in less than forty-five (45) days will be regarded as requiring payment forty-five (45) days after receipt of proper invoice or receipt of all Goods or acceptance of work, whichever occurs later. Notwithstanding the foregoing, offers of discounts for payment in less than forty-five (45) days are valid and enforceable.

c. Pursuant to Virginia Code § 2.2-4353, the date any payment shall be deemed the date of postmark in all cases where payment is made by mail.

d. The County's fiscal year is July 1 to June 30. Contractors are advised to submit invoices, especially for Goods and/or Services provided in the month of June, for the entire month (i.e. June 1 - June 30), so that expenses are recognized in the appropriate fiscal year.

e. Any payment made by the Contractor to the County shall only be made in U.S. Dollars. If payment is received in foreign currency the County may, in its sole discretion, reject such payment and require immediate compensation in U.S. Dollars.

48. SUBCONTRACTORS: Pursuant to Virginia Code § 2.2-4354, in the event that any subcontractors are used by Contractor in connection with the work, Contractor shall:

a. Within seven (7) days after receipt of amounts paid to the Contractor for work performed by a subcontractor, either:
    i. Pay the subcontractor for the proportionate share of the total payment received attributable to the work performed by the subcontractor under any Contract; or

ii. Notify the County and subcontractor, in writing, of his intention to withhold all or a part of the subcontractor's payment with the reason for nonpayment.

b. Contractor shall require each subcontractor to provide either (i) for an individual, their social security numbers, or (ii) for proprietorships, partnerships, and corporations to provide their federal employer identification numbers.

c. The Contractor shall pay interest to any subcontractor on all amounts owed by the Contractor that remain unpaid after seven days following receipt by the Contractor of payment from the County for work performed by the subcontractor under any Contract, except for amounts withheld as allowed in subdivision (a)(II) above. Unless otherwise provided under the terms of any Contract, interest shall accrue at the rate of one percent (1%) per month.

d. The Contractor shall include in each of its subcontracts under any Contract a provision requiring each subcontractor to include or otherwise be subject to the above payment and interest requirements (a), (b) and (c) with respect to each lower tier subcontractor.

e. The Contractor's obligation to pay an interest charge to a subcontractor pursuant to the payment clause in this Section 48 shall not be construed to be an obligation of the County. No Contract modification may be made for the purpose of providing reimbursement for such interest charge. No cost reimbursement claim may include any amount for reimbursement for such interest charge.

49. RETAINAGE ON CONSTRUCTION CONTRACTS: Pursuant to Virginia Code 2§ 2.2-4333, if a Contract for construction provides for progress payments in installments based upon an estimated percentage of completion, then the contractor shall be paid at least ninety-five percent (95%) of the earned sum when payment is due, with no more than five percent (5%) being retained to ensure faithful performance of the contract. All amounts withheld may be included in the final payment. Any subcontract related to work on a Contract that provides for similar progress payments shall be subject to the provisions above and the Contractor agrees to include such provisions in every subcontract.

50. SUCCESSORS AND ASSIGNS: The County and the Contractor bind themselves and their respective successors and assigns to any Contract. The foregoing notwithstanding, the Contractor shall not assign, sublet or transfer its interest in any Contract without the prior written consent of the County, which may be granted or withheld in the County's sole discretion. Nothing hereinafter mentioned shall be construed as creating any personal liability on the part of any officer, agent or employee of the County, nor shall it be construed as giving any benefits hereunder to anyone other than the County and the Contractor.

51. DEFAULT: Failure of a Contractor to deliver Goods or Services in accordance with Contract terms and conditions and/or within the time specified, or within reasonable time as interpreted by the County in its sole discretion, or failure to make replacements/corrections of rejected articles/services when so requested, immediately or as directed by the County, or

failure of the Contractor to act in accordance with the Contract in any material respect, as reasonably determined by the County, shall constitute a "default" by the Contractor and shall further authority for the County to purchase in the open market articles/services of comparable grade/quality to replace the services, articles rejected, and/or not delivered. On all such purchases, the Contractor shall reimburse the County, within a reasonable time specified by the County, for any expense incurred in excess of Contract prices including, but not limited to, any purchase and administrative costs. Such purchases shall be deducted from the Contract quantities, if applicable. Should public necessity demand it, the County reserves the right to use or consume articles delivered or services performed which are substandard in quality, subject to an adjustment in price to be determined by the County. In case of any default, the County, after due oral or written notice if required in accordance with the Contract, may terminate the Contract at its option in its sole discretion effective immediately. These remedies shall be in addition to any other remedies which the County may have, including but not limited to, any remedies at law, under the Contract or in equity.

Notwithstanding the foregoing, the Contractor shall not be liable for damages for delay in shipment or failure to deliver when such delay or failure is the result of fire, flood, strike, act of God, act of Government, act of an alien enemy or by any other circumstances which, in the County's opinion, are beyond the control of the Contractor. Under such circumstances, however, the County may, at its sole discretion, terminate or cancel the Contract effective immediately.

52. NON-DISCRIMINATION ASSURANCES: The Contractor shall conform to the provisions of the Federal Civil Rights Act of 1964, as amended, as well as the Virginia Fair Employment Act of 1975, as amended, where applicable, and § 2.2-4311 of the Virginia Procurement Act:

a. During the performance of any Contract, the Contractor agrees as follows: the Contractor will not discriminate against any employee or applicant for employment because of race, religion, color, sex, national origin, age, disability, or other basis prohibited by state law relating to discrimination in employment, except where there is a bona fide occupational qualification reasonably necessary to the normal operation of the Contractor. The Contractor agrees to post in conspicuous places, available to employees and applicants for employment, notices setting forth the provisions of this nondiscrimination clause. The Contractor, in all Solicitations or advertisements for employees placed by or on behalf of the Contractor, will state that such Contractor is an equal opportunity employer. Notices, advertisements and Solicitations placed in accordance with federal law, rule or regulation shall be deemed sufficient for the purpose of meeting the requirements of this Section 52.

b. The Contractor shall include the provisions of paragraph (a) above in every subcontract or purchase over $10,000.00 so that the provisions will be binding upon each subcontractor or Vendor.

53. MODIFICATION:

a. Pursuant to Virginia Code § 2.2-4309, these General Conditions and any Contract entered into by the County and any Contractor shall not be subject to change, modification, or discharge except by written instrument signed by the County and Contractor, but no fixed-price contract may be increased by more than twenty-five percent (25%) of the amount of the contract or $50,000, whichever is greater, without the advance written approval of the County's Board. In no event may the amount of any contract, without adequate consideration, be increased for any purpose, including, but not limited to, relief of an offeror from the consequences of an error in its bid or offer.

b. The County may, but is not obligated to, extend the term of an existing contract for services to allow completion of any work undertaken but not completed during the original term of the contract.

c. Nothing in this Section 53 shall prevent the County from placing greater restrictions on contract modifications.

54. INDEMNIFICATION: Contractor agrees to indemnify, keep and save harmless the County, its officers, agents, officials, employees and volunteers against any and all claims, claims of injuries, death, damage to property, patent claims, suits, liabilities, judgments, losses, costs and expenses, including but not limited to costs of investigation, all reasonable attorneys' fees (whether or not litigation results), and the cost of any appeal, occurring or arising in connection with the Contractor's, its agents', subcontractors', employees', or volunteers' negligence or wrongful acts or omissions in connection with its performance of any Contract. The Contractor shall, at his or her own expense, appear, defend and pay all charges of attorneys and all costs and other expenses arising therefrom or incurred in connection therewith; and if any judgment shall be rendered against the County in any such action, the Contractor shall, at his or her own expenses, satisfy and discharge the same. Contractor expressly understands and agrees that any performance bond or insurance protection required by any Contract, or otherwise provided by the Contractor, shall in no way limit the responsibility to indemnify, keep and save harmless and defend the County as herein provided. Nothing contained in this Solicitation or the Contract shall be deemed to be a waiver of the County's sovereign immunity.

55. DRUG-FREE WORKPLACE: Pursuant to Virginia Code § 2.2-4312, in every Contract over $10,000.00 the following provisions apply: During the performance of any Contract, the Contractor agrees to (i) provide a drug-free workplace for the Contractor's employees; (ii) post in conspicuous places, available to employees and applicants for employment, a Statement notifying employees that the unlawful manufacture, sale, distribution, dispensation, possession, or use of a controlled substance or marijuana is prohibited in the Contractor's workplace and specifying the actions that will be taken against employees for violations of such prohibition; (iii) state in all Solicitations or advertisements for employees placed by or on behalf of the Contractor that the Contractor maintains a drug-free workplace; and (iv) include the provisions of the foregoing clauses in every subcontract or purchase order of over $10,000, so that the provisions will be binding upon each subcontractor or vendor.

For the purposes of this Section, "*drug-free workplace*" means a site for the performance of work done in connection with a specific Contract awarded to a Contractor in accordance with this the VPPA and the County's Procurement Procedures, the employees of whom are prohibited from engaging in the unlawful manufacture, sale, distribution, dispensation, possession or use of any controlled substance or marijuana during the performance of the Contract.

56. TERMINATION: Contracts will remain in force for full periods specified and/or until all articles ordered before date of termination shall have been satisfactorily delivered and accepted and thereafter until all requirements and conditions shall have been met, unless:

a. Terminated prior to expiration date by satisfactory deliveries of entire Contract requirements;

b. Terminated by the County upon thirty (30) days written notice to the Contractor at the County's convenience in the County's sole discretion ("termination for convenience"), unless a termination for convenience is specifically and expressly prohibited by the Contract. Any Contract cancellation notice shall not relieve the Contractor of the obligation to deliver and/or perform on all outstanding orders issued prior to the effective date of the termination;

c. Terminated by the County for cause, default or negligence on the part of the Contractor. However, pursuant to Section 51 of these General Conditions, the County may hold the Contractor responsible for any resulting additional purchase and administrative costs. There is no advance notice requirement in the event of Termination for Cause and termination is effective immediately upon notice to Contractor of the termination for cause;

d. Extended upon written authorization of County and accepted by Contractor, to permit ordering of unordered balances or additional quantities at Contract prices and in accordance with Contract terms.

57. APPROPRIATIONS: Notwithstanding any other provision of any Contract, the payment of the County's obligations under any Contract shall be subject to annual appropriations by the Board of Supervisors of the County in each fiscal year of monies sufficient to satisfy the same.

58. REFERENCES TO VIRGINIA LAW: Any reference in these General Conditions to the Code of Virginia or other relevant Federal, State or local law is incorporated in whole herein by reference as in effect at the time of the Solicitation or Contract as such statutory provisions may be amended or replaced by any statute dealing with the same or similar subject matter.

59. COOPERATIVE PROCUREMENT: Except as prohibited by the current Code of Virginia, all resultant Contracts will be extended to other Public Bodies of the Commonwealth of Virginia, to permit their ordering of Goods, supplies and/or Services at the prices and terms of the resulting Contract ("cooperative procurement"). By submitting any Bid or entering into

any Contract with the County a Bidder/Contractor expressly authorizes cooperative procurement under Virginia Code § 2.2-4304 to the full extent permitted by law. If any other public body decides to use any Contract, the Contractor must deal directly with that public body concerning all matters relating thereto, including but not limited to, the placement or orders, issuance of the purchase order, contractual disputes, invoicing and payment. The County acts only as the "Contracting Agent" for these public bodies. Any resulting contract with other public bodies shall be governed by the laws of that specific entity. It is the Contractor's responsibility to notify the public bodies of the availability of the Contract. Fluvanna County shall not be held liable for any direct or indirect costs, damages or other claim of any kind incurred by another public body or any Contractor as a result of any cooperative procurement.

60. AUDIT: The Contractor hereby agrees to retain all books, records and other documents relative to any Contract for five (5) years after final payment, or until audited by the County, whichever is sooner. The County, its authorized agents, and/or County auditors shall have full access to and right to examine any of said materials during said period.

61. GUARANTIES AND WARRANTIES: All guarantees, representations and warranties required shall be furnished by the Contractor and shall be delivered to the Purchasing Agent before final payment on any Contract is made. In addition to any guarantees, representations and warranties required under the Contract, the Contractor agrees to:

a. Save the County, its agents and employees harmless from liability of any nature or kind for the use of any copyrighted or un-copyrighted composition; secret process, patented or unpatented; invention; article or appliance furnished or used in the performance of a Contract for which the Contractor is not the patentee, assignee, licensee or owner;

b. Protect the County against latent defective material or workmanship and to repair or replace any damages or marring occasioned in transit or delivery;

c. Furnish adequate protection against damage to all work and to repair damages of any kind to the building or equipment, to the Contractor's own work or to the work of other contractors, for which the Contractor's workers are responsible;

d. Pay for all permits, licenses and fees and give all notices and comply with all laws, ordinances, rules and regulations of the County; and

e. Protect the County from loss or damage to County owned property while it is in the custody of the Contractor;

f. At minimum supply all Goods or Services with the manufacturer's standard warranty, if applicable; and

g. For any Contract involving Services of any nature, the Contractor further agrees to:

i. Enter upon the performance of Services with all due diligence and dispatch, assiduously press to its complete performance, and exercise therein the highest degree of skill and competence;
ii. Allow Services to be inspected or reviewed by an employee of the County at any reasonable time and place selected by the County;
iii. Acknowledges that the County shall be under no obligation to compensate Contractor for any Services not rendered in strict conformity with the Contract; and
iv. Stipulates that the presence of a County Inspector shall not lessen the obligation of the Contractor for performance in accordance with the Contract requirements, or be deemed a defense on the part of the Contractor for infraction thereof. The Inspector is not authorized to revoke, alter, enlarge, relax, or release any of the requirements of any Contract Any omission or failure on the part of the Inspector to disapprove or reject any work or material shall not be construed to be an acceptance of any such defective work or material.

62. PRICE REDUCTIONS: If at any time after the date of the Bid/Contract the Contractor makes a general price reduction in the comparable price of any material covered by the Contract to customers generally, an equivalent price reduction based on similar quantities and/or considerations shall apply to any Contract for the duration of the Contract period (or until the price is further reduced). Such price reduction shall be effective at the same time and in the same manner as the reduction in the price to customers generally. For purpose of this provision, a "general price reduction" shall mean any horizontal reduction in the price of an article or service offered (1) to Contractor's customers generally, or (2) in the Contractor's price schedule for the class of customers, i.e., wholesalers, jobbers, retailers, etc., which was used as the basis for bidding on this Solicitation. An occasional sale at a lower price, or sale of distressed merchandise at a lower price, would not be considered a "general price reduction" under this provision. The Contractor shall submit his or her invoice at such reduced prices indicating on the invoice that the reduction is pursuant to the "Price Reduction" provision of the Contract documents. The Contractor in addition will within ten (10) days of any general price reduction notify the County of such reduction by letter. FAILURE TO DO SO IS A DEFAULT UNDER THE CONTRACT AND MAY RESULT IN TERMINATION OF THE CONTRACT IN THE COUNTY'S DISCRETION. The Contractor, if requested, shall furnish, within ten (10) days after the end of the Contract period, a statement certifying either (1) that no general price reduction, as defined above, was made after the date of the Bid or Contract, or (2) if any such general price reductions were made, that as provided above, they were reported to the County within ten (10) days and the County was billed at the reduced prices. Where one or more such general price reductions were made, the statement furnished by the Contractor shall include with respect to each price reduction (1) the date when notice of any such reduction was issued, (2) the effective date of the reduction, and (3) the date when the County was notified of any such reduction.

63. COMPLIANCE WITH IMMIGRATION LAW: Pursuant to Virginia Code § 2.2-4311.1, in every Contract the following provision applies: the Contractor does not, and shall not

during the performance of the Contract, knowingly employ an unauthorized alien as defined in the federal Immigration Reform and Control Act of 1986.

64. VIRGINIA STATE CORPORATION COMMISSION: Pursuant to Virginia Code § 2.2-4311.2, Any Bidder or Contractor organized as a stock or non-stock corporation, limited liability company, business trust, or limited partnership or registered as a registered limited liability partnership shall be authorized to transact business in the Commonwealth as a domestic or foreign business entity if so required by Title 13.1 or Title 50 of the Code of Virginia, or as otherwise required by law, at the time of the Bid, Proposal or any response to Solicitation and during the term of the Contract and any Contract renewal. The Contractor shall not allow its existence to lapse or its certificate of authority or registration to transact business in the Commonwealth, if so required, to be revoked or cancelled at any time during the term or any renewal of the Contract. If the Contractor fails to remain in compliance with the provisions of this Section 64, the Contract may become void at the option of the County.

65. CLAIMS PROCEDURE:

a. The procedure for consideration by the County of contractual claims for any Contract shall be that set forth in Virginia Code § 15.2-1243, *et seq.*

b. In addition, pursuant to Virginia Code § 2.2-4364, contractual claims, whether for money or other relief, shall be submitted in writing to the County Administrator no later than sixty (60) days after final payment; however, written notice of the Contractor's intention to file such claim shall have been given at the time of the occurrence or beginning of the work upon which the claim is based. Nothing herein shall preclude a Contract from requiring submission of an invoice for final payment within a certain time after completion and acceptance of the work or acceptance of the Goods. Pendency of claims shall not delay payment of amount agreed due in the final payment.

c. No written decision denying a claim or addressing issues related to the claim shall be considered a denial of the claim unless the written decision is signed by the Board or the County Administrator. The contractor may not institute legal action prior to receipt of the final written decision on the claim unless the County fails to render a decision within ninety (90) days of submission of the claim. Failure of the County to render a decision within ninety (90) days shall not result in the contractor being awarded the relief claimed or in any other relief or penalty. The sole remedy for the County's failure to render a decision within 90 days shall be the contractor's right to institute immediate legal action.

d. A Contractor may not institute legal action, prior to receipt of the County's decision on the claim, unless the County fails to render such decision within the time specified by law. A failure by the County to render a decision within the time provided by law shall be deemed a final decision denying the claim by the County.

e. The decision of the Board or the County Administrator shall be final and conclusive unless the Contractor appeals within six (6) months of the date of the final written decision by instituting legal action as provided in Virginia Code § 2.2-4364.

f. No administrative appeals procedure pursuant to Virginia Code § 2.2-4365 has been adopted for contractual claims by the County.

g. Nothing herein shall be construed to prevent the County from instituting legal action against any Contractor or Bidder.

66. NOTICES: All written notices required or permitted under any Solicitation, Bid or Contract shall be deemed sufficient if delivered in person to the County Purchasing Agent or Bidder/Contractor, as applicable, or sent by first class mail to the County or Bidder/Contractor at the addresses set forth in the Solicitation, Bid or Contract or at such other address as a party may designate from time to time by notice given in accordance with the terms of this Section 66; except that where a Solicitation, Bid or Contract expressly requires notice to a specific individual or at a specific location, such shall control. Such notices are deemed received when actually delivered to the party or its representative or agent if hand delivered, or one (1) business day after deposited into the United States mail, if mailed.

DELIVERY

67. SHIPPING INSTRUCTIONS-CONSIGNMENT: Unless otherwise specified in the Solicitation or Contract, as applicable, each case, crate, barrel, package, etc., delivered under the Contract must be plainly stenciled or securely tagged, stating the Contractor's name, purchase order number, and delivery address as indicated in the order. Where shipping containers are to be used, each container must be marked with the purchase order number, name of the Contractor, the name of the item, the item number, and the quantity contained therein. Deliveries must be made within the hours of 8:00 a.m. – 3:00 p.m. Deliveries at any other time will not be accepted unless specific arrangements have been previously made with the designated individual at the delivery point. No deliveries will be accepted on Saturdays, Sundays and holidays unless previous arrangements have been made. It shall be the responsibility of the Contractor to insure compliance with these instructions for items that are drop-shipped.

68. RESPONSIBILITY FOR SUPPLIES TENDERED: The Contractor shall be responsible for the materials or supplies covered by the Contract until they are delivered at the designated point. The Contractor shall additionally bear all risk on rejected materials or supplies after notice of rejection is tendered by the County. Rejected materials or supplies must be removed by and at the expense of the Contractor promptly after notification of rejection, unless public health and safety require immediate destruction or other disposal of rejected delivery. If rejected materials are not removed by the Contractor within ten (10) days after date of notification, the County may return the rejected materials or supplies to the Contractor at the Contractor's risk and expense or dispose of them as abandoned property.

69. **INSPECTIONS:** The County reserves the right to conduct any test/inspection it may deem advisable to assure supplies and Services conform to the specification in the Solicitation, Bid or Contract, as applicable. Inspection and acceptance of materials or supplies will be made after delivery at destinations herein specified unless otherwise stated. Unless otherwise specified in the Contract, if inspection is made after delivery at the destination specified, the County will bear the expense of inspection except for the value of samples used in case of rejection. Final inspection shall be conclusive except in regard to latent defects, fraud or such gross mistakes as to amount to fraud. Final inspection and acceptance or rejection of the materials or supplies will be made as promptly as practicable, but failure to inspect and accept or reject materials or supplies shall not impose liability on the County for such materials or supplies as are not in accordance with the specifications.

70. **COMPLIANCE:** Delivery must be made as ordered and in accordance with the Solicitation, Bid or Contract, as applicable, or as directed by the County when not in conflict with the Bid/Contract. The decision as to reasonable compliance with delivery terms shall be final. Burden of proof of delay in receipt of Goods by the purchaser shall rest with the Contractor. Any request for extension of time of delivery from that specified must be approved by the County, such extension applying only to the particular item or shipment affected. Unless otherwise specified in the Contract, should the Contractor be unreasonably delayed by the County, there shall be added to the time of completion a time equal to the period of such delay caused by the County. However, the Contractor shall not be entitled to claim damages or extra compensation for such delay or suspension. These conditions may vary for construction Contracts.

71. **POINT OF DESTINATION:** All materials shipped to the County must be shipped F.O.B. DESTINATION unless otherwise stated specifically in the Solicitation, Bid or Contract, as applicable. The materials must be delivered to the "Ship To" address indicated on the purchase order or Solicitation, as applicable.

72. **REPLACEMENT:** Materials or components that have been rejected by the County, in accordance with the terms of the Contract, shall be replaced by the Contractor at no cost to the County.

73. **DAMAGES:** Any and all damages to property of the "County" that is the direct result of the Contractor, the employees of the Contractor and/or its subcontractors, agents, licensees, successors, or assigns, shall be the sole responsibility of the Contractor. The property shall be repaired to its last known condition prior to the damages and/or replaced at no cost to the County. The County shall approve any and all repairs/replacements prior to acceptance of the repairs/replacement.

74. **PACKING SLIPS OR DELIVERY TICKETS:** All shipments shall be accompanied by Packing Slips or Delivery Tickets and shall contain the following information for each item delivered:

    a. Purchase Order Number;

b. Name of Article and Stock Number;

c. Quantity Ordered;

d. Quantity Shipped;

e. Quantity Back Ordered; and

f. The Name of the Contractor.

Contractors are cautioned that failure to comply with these conditions shall be considered sufficient reason for refusal to accept the Goods.

75. ADDITIONAL CHARGES: No delivery charges of any kind shall be added to any invoice; except that (i) if Goods are expressly bought F.O.B. "shipping point" under the Contract and the Contractor prepays transportation, then delivery charges shall be added to invoices; and (ii) if express delivery is authorized and substituted by the County on orders for the method specified in the Contract, then the difference between freight or mail and express charges may be added to invoice.

76. METHOD AND CONTAINERS: Unless otherwise specified, Goods shall be delivered in commercial packages in standard commercial containers, so constructed as to ensure acceptance by common or other carrier for safe transportation to the point of delivery. Containers become the property of the County unless otherwise specified by bidder.

Exhibit A2

INSTRUCTION TO BIDDERS

This document is based off of EJCDC C-200 Suggested Instructions to Bidders for Construction Contracts, but is substantially modified.

ARTICLE 1 – DEFINED TERMS

1.01 Terms used in these Instructions to Bidders have the meanings indicated in the General Conditions and Supplementary Conditions. Additional terms used in these Instructions to Bidders have the meanings indicated below:

A. *Issuing Office* – The office from which the Bidding Documents are to be issued and where the bidding procedures are to be administered.

B. *Engineer:*

Dewberry Engineers Inc.
4805 Lake Brook Drive, Suite 200
Glen Allen, VA 23060

C. Issuing Office shall be:

County of Fluvanna
Cyndi Toler, Purchasing Officer
132 Main Street
P.O. Box 540
Palmyra, VA 22963
Ph: (434) 591-1930 ext. 1124
Email: ctoler@fluvannacounty.org

ARTICLE 2 – COPIES OF BIDDING DOCUMENTS

2.01 Complete sets of the Bidding Documents are available on the eVA website and the County of Fluvanna's website at: *https://www.fluvannacounty.org/rfps*.

2.02 Complete sets of Bidding Documents shall be used in preparing Bids; neither Owner nor Engineer assumes any responsibility for errors or misinterpretations resulting from the use of incomplete sets of Bidding Documents.

2.03 Owner and Engineer, in making copies of Bidding Documents available on the above terms, do so only for the purpose of obtaining Bids for the Work and do not authorize or confer a license for any other use.

ARTICLE 3 – QUALIFICATIONS OF BIDDERS

3.01 To demonstrate Bidder's qualifications to perform the Work, Bidder shall submit written evidence such as financial data, previous experience, present commitments, and any other data as indicated in Article 7 of the Bid Form.

3.02 Bidder is advised to carefully review those portions of the Bid Form requiring Bidder's

representations and certifications.

ARTICLE 4 – EXAMINATION OF BIDDING DOCUMENTS, OTHER RELATED DATA, AND SITE

4.01 *Subsurface and Physical Conditions*

A. The Supplementary Conditions identify:

1. Geotechnical Report by Schnabel Engineering, dated October 11, 2017, titled "Geotechnical Engineering Report – Elevated Water Storage Tank – Revised Location, Route 250 and Route 15, Fluvanna County, Virginia" is included in the Appendix of this Project Manual.

4.02 *Underground Facilities*

A. Information and data shown or indicated in the Bidding Documents with respect to existing Underground Facilities at or contiguous to the Site is based upon information and data furnished to Owner and Engineer by owners of such Underground Facilities, including Owner, or others.

4.03 *Hazardous Environmental Condition*

A. There are no known reports or drawings to Owner relating to a Hazardous Environmental Condition identified at the Site.

4.04 Provisions concerning responsibilities for the adequacy of data furnished to prospective Bidders with respect to subsurface conditions, other physical conditions, and Underground Facilities, and possible changes in the Bidding Documents due to differing or unanticipated subsurface or physical conditions appear in Paragraphs 4.02, 4.03, and 4.04 of the General Conditions. Provisions concerning responsibilities for the adequacy of data furnished to prospective Bidders with respect to a Hazardous Environmental Condition at the Site, if any, and possible changes in the Contract Documents due to any Hazardous Environmental Condition uncovered or revealed at the Site which was not shown or indicated in the Drawings or Specifications or identified in the Contract Documents to be within the scope of the Work, appear in Paragraph 4.06 of the General Conditions.

4.05 On request, Owner will provide Bidder access to the Site to conduct such examinations, investigations, explorations, tests, and studies as Bidder deems necessary for submission of a Bid. Bidder shall fill all holes and clean up and restore the Site to its former condition upon completion of such explorations, investigations, tests, and studies. Bidder shall comply with all Applicable Laws and Regulations relative to excavation and utility locates.

4.06 A. Reference is made to Article 7 of the Supplementary Conditions for the identification of the general nature of other work that is to be performed at the Site by Owner or others (such as utilities and other prime contractors) that relates to the Work contemplated by these Bidding Documents. On request, Owner will provide to each Bidder for examination access to or copies of contract documents (other than portions thereof related to price) for such other work.

4.07 It is the responsibility of each Bidder before submitting a Bid to:

A. examine and carefully study the Bidding Documents, and the other related data identified in the Bidding Documents;

B. visit the Site and become familiar with and satisfy Bidder as to the general, local, and Site conditions that may affect cost, progress, and performance of the Work;

C. become familiar with and satisfy Bidder as to all federal, state, and local Laws and Regulations that may affect cost, progress, and performance of the Work;

D. carefully study all: (1) reports of explorations and tests of subsurface conditions at or contiguous to the Site and all drawings of physical conditions relating to existing surface or subsurface structures at the Site (except Underground Facilities) that have been identified in Paragraph 4.02 of the Supplementary Conditions as containing reliable "technical data," and (2) reports and drawings of Hazardous Environmental Conditions, if any, at the Site that have been identified in the Paragraph 4.06 of the Supplementary Conditions as containing reliable "technical data";

E. consider the information known to Bidder; information commonly known to contractors doing business in the locality of the Site; information and observations obtained from visits to the Site and the Bidding Documents; with respect to the effect of such information, observations, and documents on (1) the cost, progress, and performance of the Work; (2) the means, methods, techniques, sequences, and procedures of construction to be employed by Bidder, including applying any specific means, methods, techniques, sequences, and procedures of construction expressly required by the Bidding Documents; and (3) Bidder's safety precautions and programs;

F. agree at the time of submitting its Bid that no further examinations, investigations, explorations, tests, studies, or data are necessary for the determination of its Bid for performance of the Work at the price(s) bid and within the times required, and in accordance with the other terms and conditions of the Bidding Documents;

G. become aware of the general nature of the work to be performed by Owner and others at the Site that relates to the Work as indicated in the Bidding Documents;

H. promptly give the County written notice of all conflicts, errors, ambiguities, or discrepancies that Bidder discovers in the Bidding Documents and confirm that the written resolution thereof by the County is acceptable to Bidder; and

I. determine the Bidding Documents are generally sufficient to indicate and convey understanding of all terms and conditions for the performance of the Work.

4.08 The submission of a Bid will constitute an incontrovertible representation by Bidder that Bidder has complied with every requirement of this Article 4, that without exception the Bid is premised upon performing and furnishing the Work required by the Bidding Documents and applying any specific means, methods, techniques, sequences, and procedures of construction that may be shown or indicated or expressly required by the Bidding Documents, that Bidder has given the County written notice of all conflicts, errors, ambiguities, and discrepancies that Bidder has discovered in the Bidding Documents and the written resolutions thereof by the County are acceptable to Bidder, and that the Bidding Documents are generally sufficient to indicate and convey understanding of all terms and conditions for performing and furnishing the Work.

ARTICLE 5 – PRE-BID CONFERENCE

5.01 A pre-Bid conference will be held at the time and location indicated on the advertisement for bid. Representatives of Owner and Engineer will be present to discuss the Project. Bidders are encouraged to attend and participate in the conference. Engineer will transmit to all prospective Bidders of record such Addenda as Engineer considers necessary in response to questions arising at the conference. Oral statements may not be relied upon and will not be binding or legally effective.

ARTICLE 6 – SITE AND OTHER AREAS

6.01 The Site is identified in the Bidding Documents. Easements for permanent structures or permanent changes in existing facilities are to be obtained and paid for by Owner unless otherwise provided in the Bidding Documents. All additional lands and access thereto required for temporary construction facilities, construction equipment, or storage of materials and equipment to be incorporated in the Work are to be obtained and paid for by Contractor.

ARTICLE 7 – INTERPRETATIONS AND ADDENDA

7.01 All questions about the meaning or intent of the Bidding Documents are to be submitted to the County in writing on. Interpretations or clarifications considered necessary by the County in response to such questions will be issued by Addenda mailed or delivered to all parties recorded by the County as having received the Bidding Documents. Questions received less than ten days prior to the date for opening of Bids may not be answered. Only questions answered by Addenda will be binding. Oral and other interpretations or clarifications will be without legal effect.

7.02 Addenda may be issued to clarify, correct, or change the Bidding Documents as deemed advisable by Owner.

ARTICLE 8 – BID SECURITY

8.01 Pursuant to Virginia Code Section 2.2-4336, a Bid must be accompanied by Bid security in an amount of _5_ percent of Bidder's maximum Bid price and in the form of Bid bond insuring the Owner (on the form attached) issued by a surety meeting the requirements of Paragraphs 5.01 and 5.02 of the General Conditions, the County's General Terms and Virginia law.

8.02 The Bid security of the Successful Bidder will be retained until such Bidder has executed the Contract Documents, furnished the required contract security and met the other conditions of the Notice of Award, whereupon the Bid security will be returned. If the Successful Bidder fails to execute and deliver the Contract Documents and furnish the required contract security within 15 days after the Notice of Award, Owner may consider Bidder to be in default, annul the Notice of Award, and the Bid security of that Bidder will be forfeited. Such forfeiture shall be Owner's exclusive remedy if Bidder defaults. The Bid security of other Bidders whom Owner believes to have a reasonable chance of receiving the award may be retained by Owner until the earlier of seven days after the Effective Date of the Agreement or 61 days after the Bid opening, whereupon Bid security furnished by such Bidders will be returned.

8.03 Bid security of other Bidders whom Owner believes do not have a reasonable chance of receiving the award will be returned within seven days after the Bid opening.

ARTICLE 9 – CONTRACT TIMES

9.01 The number of days within which, or the dates by which, the Work is to be substantially completed and ready for final payment are set forth in the Agreement.

ARTICLE 10 – LIQUIDATED DAMAGES

10.01 Provisions for liquidated damages, if any, are set forth in the Agreement.

ARTICLE 11 – SUBSTITUTE AND "OR-EQUAL" ITEMS

11.01 The Contract, if awarded, will be on the basis of materials and equipment specified or described in the Bidding Documents without consideration of possible substitute or "or-equal" items. Whenever it is specified or described in the Bidding Documents that a substitute or "or-equal" item of material or equipment may be furnished or used by Contractor if acceptable to the Owner, application for such acceptance will not be considered by the Owner until after the Effective Date of the Agreement.

ARTICLE 12 – SUBCONTRACTORS, SUPPLIERS AND OTHERS

12.01 If the Supplementary Conditions require the identity of certain Subcontractors, Suppliers, individuals, or entities to be submitted to Owner in advance of a specified date prior to the Effective Date of the Agreement, the apparent Successful Bidder, and any other Bidder so requested, shall within five days after Bid opening, submit to Owner a list of all such Subcontractors, Suppliers, individuals, or entities proposed for those portions of the Work for which such identification is required. Such list shall be accompanied by an experience statement with pertinent information regarding similar projects and other evidence of qualification for each such Subcontractor, Supplier, individual, or entity if requested by Owner. If Owner, after due investigation, has reasonable objection consistent with the Virginia Public Procurement Act to any proposed Subcontractor, Supplier, individual, or entity, Owner may, before the Notice of Award is given, request apparent Successful Bidder to submit a substitute without an increase in the Bid.

12.02 If apparent Successful Bidder declines to make any such substitution, Owner may award the Contract to the next lowest Bidder that proposes to use acceptable Subcontractors, Suppliers, individuals, or entities so long as such is consistent with the Virginia Public Procurement Act. Declining to make requested substitutions will not constitute grounds for forfeiture of the Bid security of any Bidder. Any Subcontractor, Supplier, individual, or entity so listed and against which Owner or Engineer makes no written objection prior to the giving of the Notice of Award will be deemed acceptable to Owner and Engineer subject to revocation of such acceptance after the Effective Date of the Agreement as provided in Paragraph 6.06 of the General Conditions.

ARTICLE 13 – PREPARATION OF BID

13.01 The Bid Form is included with the Bidding Documents. See the County's General Terms for additional requirements.

13.02 All blanks on the Bid Form shall be completed in ink and the Bid Form signed in ink. Erasures or alterations shall be initialed in ink by the person signing the Bid Form. A Bid price shall be indicated for each Bid item listed therein. In the case of optional alternatives the words "No Bid," "No Change," or "Not Applicable" may be entered.

13.03 A Bid by a corporation shall be executed in the corporate name by the president or a vice-president

or other corporate officer accompanied by evidence of authority to sign. The corporate seal shall be affixed and attested by the secretary or an assistant secretary. The corporate address and state of incorporation shall be shown.

13.04 A Bid by a partnership shall be executed in the partnership name and signed by a partner (whose title must appear under the signature), accompanied by evidence of authority to sign. The official address of the partnership shall be shown.

13.05 A Bid by a limited liability company shall be executed in the name of the firm by a member and accompanied by evidence of authority to sign. The state of formation of the firm and the official address of the firm shall be shown.

13.06 A Bid by an individual shall show the Bidder's name and official address.

13.07 A Bid by a joint venture shall be executed by each joint venturer in the manner indicated on the Bid Form. The official address of the joint venture shall be shown.

13.08 All names shall be printed in ink below the signatures.

13.09 The Bid shall contain an acknowledgment of receipt of all Addenda, the numbers of which shall be filled in on the Bid Form.

13.10 Postal and e-mail addresses and telephone number for communications regarding the Bid shall be shown.

13.11 The Bid shall contain evidence of Bidder's authority and qualification to do business in the state of Virginia, or Bidder shall covenant in writing to obtain such authority and qualification prior to award of the Contract and attach such covenant to the Bid. Bidder's state contractor license number, if any, shall also be shown on the Bid Form.

ARTICLE 14 – BASIS OF BID; COMPARISON OF BIDS

14.01 *Lump Sum*

A. Bidders shall submit a Bid on a lump sum basis as set forth in the Bid Form.

14.02 *Unit Price*

A. Bidders shall submit a Bid on a unit price basis for each item of Work listed in the Bid schedule if any as listed in the Bid Form.

B. The total of all estimated prices will be the sum of the products of the estimated quantity of each item and the corresponding unit price. The final quantities and Contract Price will be determined in accordance with Paragraph 11.03 of the General Conditions.

C. Discrepancies between the multiplication of units of Work and unit prices will be resolved in favor of the method that results in a lower price to the Owner. Discrepancies between the indicated sum of any column of figures and the correct sum thereof will be resolved in favor of the method that results in a lower price to the Owner.

14.03 *Allowances – Not Applicable*

14.04 *Completion Time Comparisons – Not Applicable*

ARTICLE 15 – SUBMITTAL OF BID

15.01 With each copy of the Bidding Documents, a Bidder is furnished one copy of the Bid Form and the Bid Bond Form. The copy of the Bid Form is to be completed and submitted with the Bid security and the following documents as per Article 7 of the Bid Form.

15.02 A Bid shall be submitted no later than the date and time prescribed and at the place indicated in the advertisement or invitation to bid and shall be enclosed in a plainly marked package with the Project title (and, if applicable, the designated portion of the Project for which the Bid is submitted), the name and address of Bidder, and shall be accompanied by the Bid security and other required documents. If a Bid is sent by mail or other delivery system, the sealed envelope containing the Bid shall be enclosed in a separate package plainly marked on the outside with the notation "BID ENCLOSED." This shall be in addition to any requirements of the County's General Terms.

ARTICLE 16 – MODIFICATION AND WITHDRAWAL OF BID

16.01 See the County's General Terms.

ARTICLE 17 – OPENING OF BIDS

17.01 See the County's General Terms.

ARTICLE 18 – BIDS TO REMAIN SUBJECT TO ACCEPTANCE

18.01 All Bids will remain subject to acceptance for the period of time stated in the Bid Form, but Owner may, in its sole discretion, release any Bid and return the Bid security prior to the end of this period. Also see the County's General Terms.

ARTICLE 19 – EVALUATION OF BIDS AND AWARD OF CONTRACT

19.01 Owner reserves the right to reject any or all Bids, including without limitation, nonconforming, nonresponsive, unbalanced, or conditional Bids. Owner further reserves the right to reject the Bid of any Bidder whom it finds, after reasonable inquiry and evaluation, to not be responsible. Owner may also reject the Bid of any Bidder if Owner believes that it would not be in the best interest of the Project to make an award to that Bidder so long as consistent with applicable law including without limitation the Virginia Public Procurement Act. Owner also reserves the right to waive all informalities not involving price, time, or changes in the Work and to negotiate contract terms with the Successful Bidder.

19.02 More than one Bid for the same Work from an individual or entity under the same or different names will not be considered. Reasonable grounds for believing that any Bidder has an interest in more than one Bid for the Work may be cause for disqualification of that Bidder and the rejection of all Bids in which that Bidder has an interest.

19.03 In evaluating Bids, Owner will consider whether or not the Bids comply with the prescribed requirements, and such alternates, unit prices and other data, as may be requested in the Bid Form or prior to the Notice of Award.

19.04 In evaluating Bidders, Owner will consider the qualifications of Bidders and may consider the qualifications and experience of Subcontractors, Suppliers, and other individuals or entities proposed for those portions of the Work for which the identity of Subcontractors, Suppliers, and other individuals or entities must be submitted as provided in the Supplementary Conditions.

19.05 Owner may conduct such investigations as Owner deems necessary to establish the responsibility, qualifications, and financial ability of Bidders, proposed Subcontractors, Suppliers, individuals, or entities proposed for those portions of the Work in accordance with the Contract Documents.

19.06 Also see the County's General Terms.

ARTICLE 20 – CONTRACT SECURITY AND INSURANCE

20.01 The County's General Terms and also Article 5 of the General Conditions, as may be modified by the Supplementary Conditions, sets forth Owner's requirements as to performance and payment bonds and insurance. When the Successful Bidder delivers the executed Agreement to Owner, it shall be accompanied by such bonds.

ARTICLE 21 – SIGNING OF AGREEMENT

21.01 When Owner issues a Notice of Award to the Successful Bidder, it shall be accompanied by the required number of unsigned counterparts of the Agreement along with the other Contract Documents which are identified in the Agreement as attached thereto. Within 15 days thereafter, Successful Bidder shall sign and deliver the required number of counterparts of the Agreement and attached documents to Owner. Within ten days thereafter, Owner shall deliver one fully signed counterpart to Successful Bidder with a complete set of the Drawings with appropriate identification.

Exhibit A3

ADDENDUM NO. 1

TO: All Bid Document Holders

FROM: Dan Villhauer, P.E.

DATE: July 3, 2018

RE: ZION CROSSROADS ELEVATED WATER STORAGE TANK
FLUVANNA COUNTY DEPARTMENT OF PUBLIC WORKS
ITB NO. 2018-04

COMMONWEALTH OF VIRGINIA
DANYLO A. VILLHAUER
Lic. No. 046419
7/3/2018
PROFESSIONAL ENGINEER

The following additions, corrections, clarifications and/or changes to the Contract Documents are to be made:

1. ***Change:*** Replace Specification Section Division 00, Invitation for Bid (IFB) #2018-04, First Paragraph in its entirety with the following:
   "All sealed bids shall be turned in no later than 2:00 p.m. EST, August 31, 2018. All bids that are delivered via mail or are hand delivered must be addressed to the "Procurement Contact" listed above. Any Bids that are turned in late will be rejected and returned unopened. Any Bids sent in via facsimile, telephone, or email shall not be considered.
   Bids will be publically opened on August 31, 2018 at 3:00 p.m. EST at Fork Union Community Center, 5725 James Madison Highway, Fork Union VA 23055"

2. ***Change:*** Replace Specification Section Division 00, Agreement, Paragraph 6.02 in its entirety with the following:
   A. In lieu of payment in full at completion and if specifically requested by Contractor in its Bid, Owner shall make progress payments on account of the Contract Price on the basis of Contractor's Applications for Payment after competition of those milestones identified in an attachment to this Agreement and submitted by the Contractor in their Bid ("Schedule of Values"), but such progress payments shall only be up to those limits in Paragraph 6.02.A.1 below. All such payments will be measured by the schedule of values established as provided in Paragraph 2.07.A of the General Conditions. Such payments shall be made in accordance with Section 47 "Payment" of the County's General Terms, defined below in Section IV, and in no event, shall Contractor be paid prior to the completion date of each Schedule of Value on the Project. Contractor shall submit an invoice on the Application for Payment in accordance with Article 14 to the Owner upon completion of each schedule of values item and the Owner shall pay a proper invoice within forty-five days of receipt. Payment in full under for all of the Work will be made after final completion of the work. Contractor shall only submit Applications for Payment in accordance with Article 14 of the General Conditions. Applications for Payment will be processed by Owner as provided in the General Conditions and the County's General Terms.

      1. In no event will progress payments made to the Contractor for Schedule of Value Items exceed either:

a. 95 percent of Work completed (with the balance being retainage). If the character and progress of the Work have not been satisfactory to Owner and Engineer, then additional retainage will apply; and

b. 95 percent of cost of materials and equipment not incorporated in the Work (with the balance being retainage).

c. The above retainage will only be paid to the Contractor upon final completion to the sole satisfaction of the Owner after proper invoice to the Owner consistent with Section 6.01 above.

d. Schedule of Value Items may be identified in a schedule by the Contractor that references dates each Item will be completed within x number of days of the date the Contract Times commerce under the Article 2.03 of the General Conditions.

3. ***Change:*** Replace Specification Section Division 00, Bid Form, Article 2, Section 2.01 in its entirety with the following:
"Bidder accepts all of the terms and conditions of the Instructions to Bidders, including without limitation those dealing with the disposition of Bid security. This Bid will remain subject to acceptance for 90 days after the Bid opening, or for such longer period of time that Bidder may agree to in writing upon request of Owner."

4. ***Change:*** Specification Section Division 00, Invitation for Bid, Appendix I "General Terms, Conditions, and Instruction to Bidders and Contractors" Part 12 replace in its entirety with the following:
"ACCEPTANCE OF BIDS: Unless otherwise specified, all formal Bids or Proposals submitted shall be valid for a minimum period of ninety (90) calendar days following the date established for opening or receipt, respectively, unless extend by mutual agreement of the parties. At the end of the ninety (90) calendar days the Bid/Proposal may be withdrawn at the written request of the Bidder. Thereafter, unless and until the Proposal is withdrawn, it remains in effect until an award is made or the Solicitation is canceled by the County. The County may cancel any Solicitation at any time by notice of such cancelation to the Bidders."

5. Enclosed is the attendance list from the Pre-Bid Conference held on June 27, 2018.

Attachments:

- Pre-Bid Conference – Attendance List

All other parts of the Contract Documents remain unaltered by this Addendum. Bidders must acknowledge receipt of this Addendum on the Bid Form.

END OF ADDENDUM NO. 1

P:\FLUVANNA\50078862\Construction\Addenda\Addendum No 1\2018.07.03 Addendum No 1 Zion Crossroads Elevated Water Storage Tank.doc

Zion Crossroads Project

Company Name	Representative Name	Email Address	Phone No.	Signature
FL Showalter	David Ingle	dave.ingle@flshowalter.com	434-845-2388	
Concrete Foundations	Tommy Kost	concretefoundation.inc@yahoo.com	434-1656 6592	
Crowder Construction Company	Brian Wade	bwade@crowderusa.com	804-314-0639	
Wood Eqpt. Co.	Mike Bamber	Mbamber@woodequip.com	540-597-7235	
Caldwell Tanks	Phil Bassett / Rick Smith	bassphp@comcast.net / rsmith@caldwelltanks.com	502-964-3361	
S.J. Louis Construction	Tom Schneider / Josh Bailey	tom5@sjlouis.com / Estimators@sjlouis.com	320-253-9291	
Garney Construction	Josh Klassen	Estimating MA@Garney.com	540-219-1864	
L.B. Water Services, Inc.	Mike August	Mike.August@LB1120.com	804-337-8440	
Fortile Waterworks	Thomas Glenn	thomas.glenn@fortilic.com	540-797-5575	
Walter C. Via	Steven Whittaker	Stevenewcvia.com	804-785-2288	
McDermott / CB&I	Paul Catanzaro	paul.catanzaro@mcdermott.com	346 305 1681	
Faulconer Const.	Ed Steltser	Estelter@faulconerconstruction.com	434-295-0033	
Sherwood-Logan & Associates	Jon Casarotti	casarotti.j@sherwoodlogan.com	804 560 5410	
T.A. Sheets General Cont	Tammy Church	Kent@tasheetsinc.com	757-627-3000	
English Construction	Chase Mourhoff	jclifton@englishconst.com	434-845-0301	
East Coast Utility Contractors Inc	Donald O'Connor	doconnor@ecutility.hrcoxmail.com	757-564-7098	
Smith Midland	Bob Trumbetta	RTrumbetta@smithmidland.com	703-927-3314	

Zion Crossroads Project

Company Name	Representative Name	Email Address	Phone No.	Signature
Ferguson Waterworks	Tommy Wagner	Tommy.Wagner@ferguson.com	804-381-2282	
SARGENT CORP.	JIM CIPOLLONE	JCIPOLLONE@SARGENT-CORP.COM	804-368-7118	
Enviroscape Inc	Jim Aldous	JHA14@aol.com	804 737-0490	
ANDERSON CONST. INC.	Sam Sullivan	W.A.Anderson@andersonconst.com	434-239-4917	Sam Sullivan
~~Kenneth Smart "Jay"~~ BEE	K A Smart	Estimating@bee-llc.com	804-801-7293	
TIDEWATER UTILITY CONST. LAURENCE WALLACE	LAURENCE WALLACE	LWALLACE@TUCINCVA.com	757 304 1577	
HAJOCA	JOE SMITH	JOE.SMITH@HAJOCA.com	804-901-0955	
Hajoca	Daniel Ice	Daniel.Ice@Hajoca.com	804-629-4102	
AG Dillard INC	Josh Rector	Josh@AGDillard.com	434-989-0044	
AG Dillard INC	Sheldon Shappett	Sheldon@AGDillard.com	434-977-3750	
AG Dillard INC	John Alexander	John@AGDillard.com	434-977-3750	
Fortiline Waterworks	Rich Leeper	Rich.Leeper@Fortiline.com	919-928-2875	
TIDEWATER UTILITY CONST. INC	Robert Ackley	RAckley@TUCINCVA.com	804-994-1489	
FAULCONER CONSTRUCTION COMPANY, INC	STEVE MAHONE	SMAHONE@FAULCONERCONSTRUCTION.com	434-295-0033	
FAULCONER CONST. CO. INC.	BRIAN WOLFREY	bwolfrey@faulconerconstruction.com	434-295-0033	
MEB General Contractors Inc.	DON WADE	DWADE@MEBGC.com	804-551-0598	
MEB General Contractors	Bailey Williams			

Zion Crossroads Project

Company Name	Representative Name	Email Address	Phone No.	Signature
Fielder's Choice Enterprises Inc	David Thornton	estimating@fce-digs.com	434-244-0250	
LANDMARK STRUCTURES	DAVE CHAPMAN	ESTIMATING@TEAMLANDMARK.COM	517 439 8888	
FORTILINE WATERWORKS	STEVE RHYNE	STEVE.RHYNE@FORTILINE.COM	(800)743-1990	
JR Caskey	Gerrit Terhune	jrcestimating@jrcaskey.com	804-287-8001	
PHOENIX FABRICATORS + ERECTORS	FRANK MASSEY	frank.massey@phoenixtank.com	317-271-7002	
Mainline Construction	Josh Wright	mainline1991@gmail.com	276 835 9342	
Mainline Construction	Doug Potter	—	—	
PATTERSON CONSTRUCTION	JIM PATTERSON	JPATTERSON.PCC@GMAIL.COM	540-786-5645	
PATTERSON CONSTRUCTION	CORY OAKFORD	COAKFORD.PCC@GMAIL.COM	540-786-5645	

ADDENDUM NO. 2

TO: All Bid Document Holders

FROM: Dan Villhauer, P.E.

DATE: August 24, 2018

RE: ZION CROSSROADS ELEVATED WATER STORAGE TANK
FLUVANNA COUNTY DEPARTMENT OF PUBLIC WORKS
ITB NO. 2018-04

COMMONWEALTH OF VIRGINIA
DANYLO A. VILLHAUER
Lic. No. 046419
8/24/2018
PROFESSIONAL ENGINEER

The following additions, corrections, clarifications and/or changes to the Contract Documents are to be made:

1. ***Change:*** Replace Specification Section Division 00, Invitation for Bid (IFB) #2018-04, First Paragraph in its entirety with the following:
   "**All sealed bids shall be turned in no later than 2:00 p.m. EST, October 2, 2018.** All bids that are delivered via mail or are hand delivered must be addressed to the "Procurement Contact" listed above. Any Bids that are turned in late will be rejected and returned unopened. Any Bids sent in via facsimile, telephone, or email shall not be considered.
   Bids will be publically opened on October 2, 2018 at 3:00 p.m. EST at Fork Union Community Center, 5725 James Madison Highway, Fork Union VA 23055"

2. ***Clarification:*** Specification Section Division 00, Invitation for Bid (IFB) #2018-04, Appendix I, Item 6: In accordance with this section, all questions or comments about the specifications or other Solicitation documents from the Bidder should be submitted to the County no later than seven (7) business days prior to the date set for the opening of the Bids. The bid due date stated in item number 1 of this Addendum would therefore require all questions to be submitted no later than September 21, 2018.

3. ***Change:*** Replace Specification Section Division 00, Invitation for Bid (IFB) #2018-04, Section 6 "Submittal Instructions", A in its entirety with the following:
   A. Each Bidder must submit one (1) original and four (4) copies.

4. ***Clarification:*** All permit fees associated with permits required by Fluvanna County shall be waived. Contractor shall still be responsible for applying for, obtaining, and abiding by the requirements for each County permit. Contractor shall be responsible for applying for, paying any fees and bonds for, obtaining, and abiding by the requirements for the VDOT Land Use Permit and Performance Bond, as required.

5. ***Clarification:*** The anticipated VDOT Land Use Permit Fee is $110.00. There is no anticipated VDOT Surety Bond.

6. ***Clarification:*** The Owner will not perform any additional soil bores once the land has been cleared. The tank manufacturer is responsible for designing a foundation system that is adequate for the soil conditions that the tank will be built upon. Should the tank manufacturer determine that additional

soil bores are needed for the design of the tank, the Contractor shall be responsible for those additional soil bores.

7. ***Change:*** Replace Specification Section 16620, 2.19, L in its entirety with the following:
"L. The ATS shall be ASCO 300 Series (or equal) in a NEMA-4X enclosure"

8. ***Change:*** Refer to the following for the Low Voltage Distribution Transformer specification:
   a. Three Phase Ventilated Dry Type Distribution Transformer
   b. Enclosure: 304 Stainless Steel, NEMA-3R with weather shield
   c. Temperature Rise 150degC with 220degC Insulation System
   d. Primary Voltage: 480Vac Delta 3-Phase
   e. Secondary Voltage: 208Y/120Vac 3-Phase
   f. Operating Frequency: 60Hz
   g. Taps Percent Steps: 2.5%
   h. kVA: 15
   i. UL Listed

9. ***Clarification:*** Specification Section 13100, Section 4.12, C, 1 – Overflow pipe design shall be the responsibility of the tank manufacturer to meet minimum performance specifications as outlined in this section.

10. ***Clarification:*** Drawings M2.0 and M3.1 – Regarding the location of the expansion joints at vertical pipes – the tank manufacturer shall be responsible for the design and location of the expansion joints and provide an adequate system to allow for natural movement of the tank.

11. ***Clarification:*** Specification Section 13100, Section 4.12, C, 1 – Weir box/siphon design shall be the responsibility of the tank manufacturer to meet minimum performance specifications as outlined in this section.

12. ***Clarification:*** Drawing M2.0 – Regarding the diameter shown for the base cone, the tank manufacturer will be responsible for the design of the tank. Any changes to the diameter of the base, and any subsequent changes required to the site layout, will be the responsibility of the Contractor.

13. ***Clarification:*** Contractor shall assume responsibility of relocating the existing telephone line shown on the site plan. Contractor shall also be responsible for coordinating with the phone company for requirements of line relocation.

14. ***Clarification:*** A tank logo is not required.

15. ***Clarification:*** Any third party inspection required for the project that is not specifically required to be the responsibility of the Contractor in the Contract Documents will be the responsibility of the Owner.

Attachments:

- None

All other parts of the Contract Documents remain unaltered by this Addendum. Bidders must acknowledge receipt of this Addendum on the Bid Form.

END OF ADDENDUM NO. 2

P:\FLUVANNA\50078862\Construction\Addenda\Addendum No 2\2018.08.24 Addendum No 2 Zion Crossroads Elevated Water Storage Tank.doc

ADDENDUM NO. 3

TO: **All Bid Document Holders**

FROM: **Dan Villhauer, P.E.**

DATE: **September 26, 2018**

RE: **ZION CROSSROADS ELEVATED WATER STORAGE TANK**
FLUVANNA COUNTY DEPARTMENT OF PUBLIC WORKS
ITB NO. 2018-04

COMMONWEALTH OF VIRGINIA
DANYLO A. VILLHAUER
Lic. No. 046419
9/26/18
PROFESSIONAL ENGINEER

The following additions, corrections, clarifications and/or changes to the Contract Documents are to be made:

1. ***Change:*** Replace Specification Section Division 00, Invitation for Bid (IFB) #2018-04, First Paragraph in its entirety with the following:
   "**All sealed bids shall be turned in no later than 2:00 p.m. EST, <u>October 9, 2018</u>.** All bids that are delivered via mail or are hand delivered must be addressed to the "Procurement Contact" listed above. Any Bids that are turned in late will be rejected and returned unopened. Any Bids sent in via facsimile, telephone, or email shall not be considered.
   Bids will be publically opened on <u>October 9, 2018</u> at 3:00 p.m. EST at Fork Union Community Center, 5725 James Madison Highway, Fork Union VA 23055"

2. ***Clarification:*** Specification Section Division 00, Invitation for Bid (IFB) #2018-04, Appendix I, Item 18 "Tax Exemption" means the County is exempt from tax for its direct purchases under V.A.C. 10-210-690 A.

3. ***Change:*** Delete Specification Section Division 00, Invitation for Bid (IFB) #2018-04, Part 4, A, viii in its entirety and replace with the following:
   "Contractor(s) shall warrant replace or repair any defective product, materials, installation or services on the Project for one (1) year from County's final acceptance of any services hereunder, work or services on the Project at no additional cost. County shall be deemed to have accepted services hereunder only after receipt of a proper and detailed invoice from Contractor for all of the work on the Project and payment by the County to Contractor in full on such invoice."

4. ***Change:*** No additional questions will be answered following the issuance of this addendum.

5. ***Clarification:*** A restrained coupling is required on the overflow piping as shown on Sheet M2.0 of the drawings.

6. ***Clarification:*** Specification Section 13100, 4.12, B, 2 – tank inlet piping shall be constructed in accordance with this section.

7. ***Clarification:*** Specification Section 13100, 3.2, B, 1 – tank welds shall be constructed in accordance with this section.

8. ***Change:*** Delete Specification Section Summary of Work 01010, 1.11 in its entirety and replace with the following:

1.11 WORK OUTSIDE REGULAR HOURS

A. If the CONTRACTOR desires to perform work outside the regular hours, he shall request permission 48 hours in advance of the proposed work to allow arrangements to be made for proper inspection. The OWNER reserves the right to refuse, at his discretion, any work request outside the regular hours made by the CONTRACTOR. The OWNER may refuse the CONTRACTOR permission to work if the 48-hour notice is not given. Reasonable efforts shall be made by the CONTRACTOR to avoid undue noise during the night, if it is necessary to work at such times.

B. Unless specifically scheduled to work outside normal hours by the OWNER in the interest of public safety or convenience, then the CONTRACTOR will be liable for the expense of overtime work required by OWNER's and/or ENGINEER's employees. This expense includes but is not limited to OWNER and ENGINEER called to the job site outside normal working hours to resolve problems directly related to the project. Normal or regular working hours are defined as 7:00 a.m. to 5:00 p.m. Monday through Sunday.

C. IF CONTRACTOR anticipates working outside normal work hours, he shall notify the ENGINEER and OWNER as soon as possible, but in no circumstances less than 48 hours in advance.

Attachments:

- None

All other parts of the Contract Documents remain unaltered by this Addendum. Bidders must acknowledge receipt of this Addendum on the Bid Form.

END OF ADDENDUM NO. 3

P:\FLUVANNA\50078862\Construction\Addenda\Addendum No 3\2018.09 26 Addendum No 3 Zion Crossroads Elevated Water Storage Tank.doc

Exhibit B

MCDERMOTT

CB&I STORAGE TANK SOLUTIONS
11560 Great Oaks Way, Suite 500
Alpharetta, GA 30022
www.mcdermott.com

October 9, 2018

Fluvanna County, Virginia
132 Man Street
Palmyra, VA 22963

Attention: Ms. Cyndi Toler
Purchasing Officer

Re: IFB #2018-04
Zion Crossroads Elevated Storage Tank

Dear Ms. Toler,

In response to your Invitation to Bid and your Instructions to Bidders, this is a cover letter confirming our understanding of the IFB and a brief history and qualification of McDermott/CBI Storage Tank Solutions as a contractor.

McDermott International and CB&I Inc. merged companies in May 2018. Both companies have long and distinguished histories providing engineering and construction solutions to the energy and water industries. This work would be executed by McDermott's merit open shop subsidiary, CB&I LLC. As such, CB&I LLC (CB&I) will be the contracting entity for any resultant agreement.

CB&I possesses the strengths and capabilities to execute this project for you safely and efficiently. Some of these strengths, which we would like to highlight, are:

- CB&I is a 130 year old company, with extensive experience in designing, fabricating and erecting field erected storage tanks and is the leading tank-builder in the world. This depth of experience ensures that all phases of the scope will be executed correctly and efficiently resulting in a quality product delivered on time.

- CB&I utilizes field incentive programs that promote safety, quality and productivity. These programs have established our culture and will be a key to successful execution of this project.

- CB&I has an EMR of 0.36, one of the best safety records in our industry. You can count on this behavior-based safety program to ensure safe performance of this work.

- CB&I has designed and built over 25,000 elevated water storage tanks with many in Virginia and, it should be noted, CB&I invented and built the first Waterspheroid style elevated tank in 1954.

- Since that first Waterspheroid, we have designed and built the tallest, the largest capacity and more than all our competitors combined. Nobody can do it better!

MCDERMOTT

We appreciate the opportunity to present our offer and look forward to building a very aesthetically pleasing Waterspheroid tank in Fluvanna County, Virginia.

Sincerely,
On behalf of CB&I LLC

Paul P. Catanzaro

Paul Catanzaro
Business Development Manager
CB&I Storage Tank Solutions
Office: 770 521 6544
Email: paul.catanzaro@ mcdermott.com

PENAL SUM FORM

BID BOND

Any singular reference to Bidder, Surety, Owner or other party shall be considered plural where applicable.

BIDDER *(Name and Address)*:
CB&I LLC
11560 Great Oaks Way, Suite 500, Alpharetta, GA 30022

SURETY *(Name and Address of Principal Place of Business)*:
WESTERN SURETY COMPANY
151 N FRANKLIN STREET, CHICAGO, IL 60606

OWNER
COUNTY OF FLUVANNA, VA
123 Main Street
Palmra, VA 22963

BID
Bid Due Date: October 2, 2018
Description: Zion Crossroads Elevated Water Storage Tank, Palmyra, VA

BOND
Bond Number: N/A
Date *(Not earlier than Bid due date)*: October 2, 2018
Penal sum *FIVE PERCENT OF THE TOTAL AMOUNT BID* (Words) $ 5% of Total Amount Bid (Figures)

Surety and Bidder, intending to be legally bound hereby, subject to the terms set forth below, do each cause this Bid Bond to be duly executed by an authorized officer, agent, or representative.

BIDDER	**SURETY**
CB&I LLC (Seal)	WESTERN SURETY COMPANY (Seal)
Bidder's Name and Corporate Seal	Surety's Name and Corporate Seal
By: Paul P Catanzaro	By: Michelle D Krebs
Signature	Signature (Attach Power of Attorney)
Paul P. Catanzaro,	Michelle D. Krebs,
Print Name	Print Name
Business Development Manager	Attorney-In-Fact
Title	Title
~~Attest:~~ Carole L. Malone	Attest: Jay M Sirem
Signature	Signature
Witness	witness to surety
Title	Title

Note: Above addresses are to be used for giving any required notice. Provide execution by any additional parties, such as joint venturers, if necessary.

PENAL SUM FORM

1. Bidder and Surety, jointly and severally, bind themselves, their heirs, executors, administrators, successors, and assigns to pay to Owner upon default of Bidder the penal sum set forth on the face of this Bond. Payment of the penal sum is the extent of Bidder's and Surety's liability. Recovery of such penal sum under the terms of this Bond shall be Owner's sole and exclusive remedy upon default of Bidder.

2. Default of Bidder shall occur upon the failure of Bidder to deliver within the time required by the Bidding Documents (or any extension thereof agreed to in writing by Owner) the executed Agreement required by the Bidding Documents and any performance and payment bonds required by the Bidding Documents.

3. This obligation shall be null and void if:

3.1 Owner accepts Bidder's Bid and Bidder delivers within the time required by the Bidding Documents (or any extension thereof agreed to in writing by Owner) the executed Agreement required by the Bidding Documents and any performance and payment bonds required by the Bidding Documents, or

3.2 All Bids are rejected by Owner, or

3.3 Owner fails to issue a Notice of Award to Bidder within the time specified in the Bidding Documents (or any extension thereof agreed to in writing by Bidder and, if applicable, consented to by Surety when required by Paragraph 5 hereof).

4. Payment under this Bond will be due and payable upon default of Bidder and within 30 calendar days after receipt by Bidder and Surety of written notice of default from Owner, which notice will be given with reasonable promptness, identifying this Bond and the Project and including a statement of the amount due.

5. Surety waives notice of any and all defenses based on or arising out of any time extension to issue Notice of Award agreed to in writing by Owner and Bidder, provided that the total time for issuing Notice of Award including extensions shall not in the aggregate exceed 120 days from Bid due date without Surety's written consent.

6. No suit or action shall be commenced under this Bond prior to 30 calendar days after the notice of default required in Paragraph 4 above is received by Bidder and Surety and in no case later than one year after Bid due date.

7. Any suit or action under this Bond shall be commenced only in a court of competent jurisdiction located in the state in which the Project is located.

8. Notices required hereunder shall be in writing and sent to Bidder and Surety at their respective addresses shown on the face of this Bond. Such notices may be sent by personal delivery, commercial courier, or by United States Registered or Certified Mail, return receipt requested, postage pre-paid, and shall be deemed to be effective upon receipt by the party concerned.

9. Surety shall cause to be attached to this Bond a current and effective Power of Attorney evidencing the authority of the officer, agent, or representative who executed this Bond on behalf of Surety to execute, seal, and deliver such Bond and bind the Surety thereby.

10. This Bond is intended to conform to all applicable statutory requirements. Any applicable requirement of any applicable statute that has been omitted from this Bond shall be deemed to be included herein as if set forth at length. If any provision of this Bond conflicts with any applicable statute, then the provision of said statute shall govern and the remainder of this Bond that is not in conflict therewith shall continue in full force and effect.

11. The term "Bid" as used herein includes a Bid, offer, or proposal as applicable.

Western Surety Company

POWER OF ATTORNEY APPOINTING INDIVIDUAL ATTORNEY-IN-FACT

Know All Men By These Presents, That WESTERN SURETY COMPANY, a South Dakota corporation, is a duly organized and existing corporation having its principal office in the City of Sioux Falls, and State of South Dakota, and that it does by virtue of the signature and seal herein affixed hereby make, constitute and appoint

Thomas E Purtell, Michelle D Krebs, Elaine Harmon, Individually

of Cincinnati, OH, its true and lawful Attorney(s)-in-Fact with full power and authority hereby conferred to sign, seal and execute for and on its behalf bonds, undertakings and other obligatory instruments of similar nature

- In Unlimited Amounts -

and to bind it thereby as fully and to the same extent as if such instruments were signed by a duly authorized officer of the corporation and all the acts of said Attorney, pursuant to the authority hereby given, are hereby ratified and confirmed.

This Power of Attorney is made and executed pursuant to and by authority of the By-Law printed on the reverse hereof, duly adopted, as indicated, by the shareholders of the corporation.

In Witness Whereof, WESTERN SURETY COMPANY has caused these presents to be signed by its Vice President and its corporate seal to be hereto affixed on this 1st day of February, 2017.

WESTERN SURETY COMPANY

Paul T. Bruflat, Vice President

State of South Dakota
County of Minnehaha } ss

On this 1st day of February, 2017, before me personally came Paul T. Bruflat, to me known, who, being by me duly sworn, did depose and say: that he resides in the City of Sioux Falls, State of South Dakota; that he is the Vice President of WESTERN SURETY COMPANY described in and which executed the above instrument; that he knows the seal of said corporation; that the seal affixed to the said instrument is such corporate seal; that it was so affixed pursuant to authority given by the Board of Directors of said corporation and that he signed his name thereto pursuant to like authority, and acknowledges same to be the act and deed of said corporation.

My commission expires
June 23, 2021

J. MOHR NOTARY PUBLIC SOUTH DAKOTA

J. Mohr, Notary Public

CERTIFICATE

I, L. Nelson, Assistant Secretary of WESTERN SURETY COMPANY do hereby certify that the Power of Attorney hereinabove set forth is still in force, and further certify that the By-Law of the corporation printed on the reverse hereof is still in force. In testimony whereof I have hereunto subscribed my name and affixed the seal of the said corporation this 2 day of October, 2018.

WESTERN SURETY COMPANY

L. Nelson, Assistant Secretary

Form F4280-7-2012

CERTIFICATION OF RESOLUTION AND AUTHORITY

I, Robert E. Stumpf, do hereby certify that I am the duly-elected and acting Assistant Secretary of CB&I LLC (formerly CB&I Inc.), a Texas corporation, and that as such officer I am duly authorized to make this certificate in behalf of that corporation.

I further certify that by consent in lieu of a meeting dated March 6, 2001, as authorized by Texas law, the Board of Directors of said corporation adopted the following resolution in accordance with the By-laws of said corporation:

> **RESOLVED,** that the President, any Vice-President, the Treasurer, or any regional sales manager, contracting manager, regional construction manager, manufacturing manager, project manager or business development manager heretofore or hereafter appointed by the Company or any other sales representative as may from time to time be designated by any one of the President, any Vice-President or the Treasurer, is authorized to make bids, prepare quotations and submit and receive proposals for contracts; to negotiate and sign contracts and other agreements, bid bonds, performance bonds, and other related documents; and to otherwise bind and obligate the Company in the conduct of its normal business.

I further certify that the foregoing resolution is in full force and effect and that Paul P. Catanzaro is a duly designated and authorized Business Development Manager of CB&I LLC.

This certificate shall remain in full force and effect for ninety days from the date it bears, unless sooner revoked, but no such revocation shall be effective as to anyone dealing with any individual named in this certificate in reliance hereon unless written notice of such revocation has been received by the person so relying on this certificate.

IN WITNESS WHEREOF, I have hereonto set my hand and the seal of CB&I LLC, this 2nd day of October, 2018.

Robert E. Stumpf, Assistant Secretary

BID FORM

This document is based off of EJCDC C-410 Suggested Bid Form for Construction Contracts, but is modified.

ARTICLE 1 – BID RECIPIENT

1.01 This Bid is submitted to:

Fluvanna County
P.O. Box 540
Fluvanna, VA 22963

1.02 The undersigned Bidder proposes and agrees, if this Bid is accepted, to enter into an Agreement with Owner in the form included in the Bidding Documents to perform all Work as specified or indicated in the Bidding Documents for the prices and within the times indicated in this Bid and in accordance with the other terms and conditions of the Bidding Documents.

ARTICLE 2 – BIDDER'S ACKNOWLEDGEMENTS

2.01 Bidder accepts all of the terms and conditions of the Instructions to Bidders, including without limitation those dealing with the disposition of Bid security. This Bid will remain subject to acceptance for 120 days after the Bid opening, or for such longer period of time that Bidder may agree to in writing upon request of Owner.

ARTICLE 3 – BIDDER'S REPRESENTATIONS

3.01 In submitting this Bid, Bidder represents that:

A. Bidder has examined and carefully studied the Bidding Documents, other related data identified in the Bidding Documents, and the following Addenda, receipt of which is hereby acknowledged:

Addendum No.	Addendum Date
No. 1	July 3, 2018
No. 2	August 24, 2018
No. 3	September 26, 2018

B. Bidder has visited the Site and become familiar with and is satisfied as to the general, local, and Site conditions that may affect cost, progress, and performance of the Work.

C. Bidder is familiar with and is satisfied as to all Laws and Regulations that may affect cost, progress, and performance of the Work.

D. Bidder has carefully studied all: (1) reports of explorations and tests of subsurface conditions, if any, at or contiguous to the Site and all drawings of physical conditions relating to existing surface or subsurface structures at the Site (except Underground Facilities) that have been identified in SC-4.02 as containing reliable "technical data," and (2) reports and drawings of Hazardous Environmental Conditions, if any, at the Site that have been identified in SC-4.06 as containing reliable "technical data."

E. Bidder has considered the information known to Bidder; information commonly known to contractors doing business in the locality of the Site; information and observations obtained from visits to the Site; the Bidding Documents; and the Site-related reports and drawings identified in the Bidding Documents, with respect to the effect of such information, observations, and documents on (1) the cost, progress, and performance of the Work; (2) the means, methods, techniques, sequences, and procedures of construction to be employed by Bidder, including applying the specific means, methods, techniques, sequences, and procedures of construction expressly required by the Bidding Documents; and (3) Bidder's safety precautions and programs.

F. Based on the information and observations referred to in Paragraph 3.01.E above, Bidder does not consider that further examinations, investigations, explorations, tests, studies, or data are necessary for the determination of this Bid for performance of the Work at the price(s) bid and within the times required, and in accordance with the other terms and conditions of the Bidding Documents.

G. Bidder is aware of the general nature of work to be performed by Owner and others at the Site that relates to the Work as indicated in the Bidding Documents.

H. Bidder has given Engineer written notice of all conflicts, errors, ambiguities, or discrepancies that Bidder has discovered in the Bidding Documents, and the written resolution thereof by Engineer is acceptable to Bidder.

I. The Bidding Documents are generally sufficient to indicate and convey understanding of all terms and conditions for the performance of the Work for which this Bid is submitted.

ARTICLE 4 – BIDDER'S CERTIFICATION

4.01 Bidder certifies that:

A. This Bid is genuine and not made in the interest of or on behalf of any undisclosed individual or entity and is not submitted in conformity with any collusive agreement or rules of any group, association, organization, or corporation;

B. Bidder has not directly or indirectly induced or solicited any other Bidder to submit a false or sham Bid;

C. Bidder has not solicited or induced any individual or entity to refrain from bidding; and

D. Bidder has not engaged in corrupt, fraudulent, collusive, or coercive practices in competing for the Contract. For the purposes of this Paragraph 4.01.D:

1. "corrupt practice" means the offering, giving, receiving, or soliciting of any thing of value likely to influence the action of a public official in the bidding process;

2. "fraudulent practice" means an intentional misrepresentation of facts made (a) to influence the bidding process to the detriment of Owner, (b) to establish bid prices at artificial non-competitive levels, or (c) to deprive Owner of the benefits of free and open competition;

3. "collusive practice" means a scheme or arrangement between two or more Bidders, with or without the knowledge of Owner, a purpose of which is to establish bid prices at artificial, non-competitive levels; and

4. "coercive practice" means harming or threatening to harm, directly or indirectly, persons or their property to influence their participation in the bidding process or affect the execution of the Contract.

ARTICLE 5 – BASIS OF BID

5.01 Bidder will complete the Work in accordance with the Contract Documents for the following price(s):

PART A: Lump sum price of construction, complete and in place, and for furnishing and installing all products and equipment including, but not limited to, all site work, piping, concrete, electrical, controls and other associated work, in accordance with the drawings and specifications. The bid price will be based on furnishing equipment and materials in compliance with the specifications. Should the Contractor fail to provide a manufacturer of equipment which complies with the specifications, the Owner reserves the right to select approved specified equipment of his choice without an increase in the contract price. Price in this part is for all work not included in subsequent Parts B, and C.

PART A BASE BID:

ONE MILLION NINE HUNDRED NINETY THOUSAND (ZERO CENTS) (in words)

Dollars ($ 1,990,420.00 & FOUR HUNDRED TWENTY DOLLARS).

PART B - EXCAVATION AND DISPOSAL OF UNSATISFACTORY SOILS

Excavation of unsatisfactory soil material, where authorized or directed, proper disposal off-site of excess material, complete per specifications. (Price per cubic yard) (Final amount shall be adjusted upward or downward based on the actual quantity authorized.):

As provided in Paragraph 11.03 of the General Conditions, estimated quantities are not guaranteed, and determinations of actual quantities and classifications are to be made by Engineer as provided in Paragraph 9.07 of the General Conditions. Unit prices have been computed as provided in Paragraph 11.03 of the General Conditions.

Estimated quantity of 10 cy @ $ 22.00 per cy = $ 220.00

PART B BASE BID:

TWO HUNDRED TWENTY DOLLARS (ZERO CENTS) (in words)

Dollars ($ 220.00).

PART C - STRUCTURAL FILL

Placement of, where authorized or directed, structural fill complete per specifications. (Price per cubic yard) (Final amount shall be adjusted upward or downward based on the actual quantity authorized.):

As provided in Paragraph 11.03 of the General Conditions, estimated quantities are not guaranteed, and determinations of actual quantities and classifications are to be made by Engineer as provided in Paragraph 9.07 of the General Conditions. Unit prices have been computed as provided in Paragraph 11.03 of the General Conditions.

Estimated quantity of 10 cy @ $ 36 per cy = $360

PART C BASE BID:

THREE HUNDRED & SIXTY DOLLARS (ZERO CENTS) (in words)

Dollars ($ $360.00).

TOTAL BASE BID (Parts A, B, and C Combined)

ONE MILLION NINE HUNDRED NINTY ONE THOUSAND DOLLARS (ZERO CENTS) (in words)

Dollars ($ 1,921,000.00).

ARTICLE 6 – TIME OF COMPLETION

6.01 Bidder agrees that the Work will be substantially complete and will be completed and ready for final payment in accordance with Paragraph 14.07 of the General Conditions on or before the dates or within the number of calendar days indicated in the Agreement.

6.02 Bidder accepts the provisions of the Agreement as to liquidated damages.

ARTICLE 7 – ATTACHMENTS TO THIS BID

7.01 The following documents are submitted with and made a condition of this Bid:

A. Required Bid security in the form of Bid Bond; ✓

B. List of Proposed Subcontractors; ✓

C. List of Proposed Suppliers; NA

D. List of Project References; ✓

E. Evidence of authority to do business in the state of the Project; or a written covenant to obtain such license within the time for acceptance of Bids; ✓

F. Contractor's License No.: 2701023269 ✓

LIST OF PROPOSED CB&I LLC SUBCONTRACTORS

PROJECT WORK	SUBCONTRACTOR	CONTACT	PHONE
Civil & Foundation & Mechanical Piping	Patterson Construction of Fredericksburg VA	Jim Patterson President	540-548-0633
Tank Painting	CBI (in-house)	NA	NA
Electrical	ICSE	Jason Timsley	804 550 5770
Freight	Bennett Trucking	National Acct	

CERTIFICATION OF RESOLUTION AND AUTHORITY

I, Robert E. Stumpf, do hereby certify that I am the duly-elected and acting Assistant Secretary of CB&I LLC (formerly CB&I Inc.), a Texas corporation, and that as such officer I am duly authorized to make this certificate in behalf of that corporation.

I further certify that by consent in lieu of a meeting dated March 6, 2001, as authorized by Texas law, the Board of Directors of said corporation adopted the following resolution in accordance with the By-laws of said corporation:

> **RESOLVED,** that the President, any Vice-President, the Treasurer, or any regional sales manager, contracting manager, regional construction manager, manufacturing manager, project manager or business development manager heretofore or hereafter appointed by the Company or any other sales representative as may from time to time be designated by any one of the President, any Vice-President or the Treasurer, is authorized to make bids, prepare quotations and submit and receive proposals for contracts; to negotiate and sign contracts and other agreements, bid bonds, performance bonds, and other related documents; and to otherwise bind and obligate the Company in the conduct of its normal business.

I further certify that the foregoing resolution is in full force and effect and that Paul P. Catanzaro is a duly designated and authorized Business Development Manager of CB&I LLC.

This certificate shall remain in full force and effect for ninety days from the date it bears, unless sooner revoked, but no such revocation shall be effective as to anyone dealing with any individual named in this certificate in reliance hereon unless written notice of such revocation has been received by the person so relying on this certificate.

IN WITNESS WHEREOF, I have hereonto set my hand and the seal of CB&I LLC, this 2nd day of October, 2018.

Robert E. Stumpf, Assistant Secretary

Attest Robert E. Stumpf, Assistant Secretary

Date of Qualification to do business in Virginia *[State where Project is located]* is 01 / 01 / 1979

A Joint Venture NOT APPLICABLE

Name of Joint Venture: _____

First Joint Venturer Name: _____ (SEAL)

By: _____
(Signature of first joint venture partner -- attach evidence of authority to sign)

Name (typed or printed): _____

Title: _____

Second Joint Venturer Name: _____(SEAL)

By: _____
(Signature of second joint venture partner -- attach evidence of authority to sign)

Name (typed or printed): _____

Title: _____

(Each joint venturer must sign. The manner of signing for each individual, partnership, and corporation that is a party to the joint venture should be in the manner indicated above.)

Bidder's Business Address 11560 Great Oaks Way, Suite 500 Alpharetta, GA 30022

Phone No. 770 521 6544 Fax No. 770 777 9545

E-mail paul.catanzaro@mcdermott.com

SUBMITTED on October 2, 20 18.

State Contractor License No. 2701023269. *[If applicable]*

G. Required Bidder Qualification Statement, Section 00330, with supporting data.

ARTICLE 8 – DEFINED TERMS

8.01 The terms used in this Bid with initial capital letters have the meanings stated in the Instructions to Bidders, the General Conditions, and the Supplementary Conditions.

ARTICLE 9 – BID SUBMITTAL

9.01 This Bid is submitted by:

NOT APPLICABLE

If Bidder is:

An Individual

Name (typed or printed): _____

By: _____
(Individual's signature)

Doing business as: _____

A Partnership

NOT APPLICABLE

Partnership Name: _____

By: _____
(Signature of general partner -- attach evidence of authority to sign)

Name (typed or printed): _____

A Corporation

Corporation Name: CB&I LLC
(SEAL)

State of Incorporation: Texas
Type (General Business, Professional, Service, Limited Liability): Limited Liability Company

By: Paul P Catanzaro
(Signature -- attach evidence of authority to sign)

Name (typed or printed): Paul P. Catanzaro

Title: Business Development Manager
(CORPORATE SEAL)

(See attached Certification of Resolution & Authority - Robert E. Stumpf, Assistant Secretary)

PROOF OF AUTHORITY TO TRANSACT BUSINESS IN VIRGINIA

THIS FORM MUST BE SUBMITTED WITH YOUR PROPOSAL/BID. FAILURE TO INCLUDE THIS FORM MAY RESULT IN REJECTION OF YOUR PROPOSAL/BID

Pursuant to Virginia Code §2.2-4311.2, an Offeror/Bidder organized or authorized to transact business in The Commonwealth pursuant to Title 13.1 or Title 50 of the Code of Virginia shall include in its proposal/bid the identification number issued to it by the State Corporation Commission ("SCC"). Any Offeror/Bidder that is not required to be authorized to transact business in the Commonwealth as a foreign business entity under Title 13.1 or Title 50 of the Code of Virginia or as otherwise required by law shall include in its proposal/bid a statement describing why the Offeror/Bidder is not required to be so authorized. Any Offeror/Bidder described herein that fails to provide the required information shall not receive an award unless a waiver of this requirement and the administrative policies and procedures established to implement this section is granted by the County Administrator, as applicable. If this quote for goods or services is accepted by the County of Fluvanna, Virginia, the undersigned agrees that the requirements of the Code of Virginia Section 2.2-4311.2 have been met.

Please complete the following by checking the appropriate line that applies and providing the requested information. ***PLEASE NOTE: The SCC number is NOT your federal ID number or business license number.***

A._____ Offeror/Bidder is a Virginia business entity organized and authorized to transact business in Virginia by the SCC and such vendor's Identification Number issued to it by the SCC is _____.

B._X_ Offeror/Bidder is an out-of-state (foreign) business entity that is authorized to transact business in Virginia by the SCC and such vendor's Identification Number issued to it by the SCC is T0661316.

C._____ Offeror/Bidder does not have an Identification Number issued to it by the SCC and such vendor is not required to be authorized to transact business in Virginia by the SCC for the following reason(s): **Please attach additional sheets if you need to explain why such Offeror/Bidder is not required to be authorized to transact business in Virginia.**

Legal Name of Company (as listed on W-9): CB&I LLC
Legal Name of Offeror/Bidder: CB&I LLC
Date: October 2, 2018
Authorized Signature: Paul P. Catanzaro
Print or Type Name and Title: Paul P. Catanzaro, Business Development Manager

PLEASE RETURN THIS PAGE WITH PROPOSAL SUBMISSION – [REQUIRED]

COMMONWEALTH of VIRGINIA

Department of Professional and Occupational Regulation
9960 Mayland Drive, Suite 400, Richmond, VA 23233
Telephone: (804) 367-8500

EXPIRES ON
02-29-2020

NUMBER
2701023269

BOARD FOR CONTRACTORS
CLASS A CONTRACTOR
CLASSIFICATIONS H/H VCC

DPOR

CB&I LLC
2103 RESEARCH FOREST DRIVE
THE WOODLANDS, TX 77380

Jay W. DeBoer, Director

Status can be verified at http://www.dpor.virginia.gov

DPOR-LIC (02/2017)

(DETACH HERE)

(SEE REVERSE SIDE FOR PRIVILEGES AND INSTRUCTIONS)

DPOR COMMONWEALTH of VIRGINIA
Department of Professional and Occupational Regulation

CLASS A BOARD FOR CONTRACTORS
CONTRACTOR

CLASSIFICATIONS H/H VCC
NUMBER: 2701023269 EXPIRES: 02-29-2020

CB&I LLC
2103 RESEARCH FOREST DRIVE
THE WOODLANDS, TX 77380

(FOLD)

DPOR-PC (02/2017)

Status can be verified at http://www.dpor.virginia.gov

SCC eFile > Entity Search > Entity Details

SCC eFile
FAST. SIMPLE. SECURE.

SC
Business I

SCC eFile
- SCC eFile Home Page
- Check Name Distinguishability
- Business Entity Search
- Certificate Verification
- FAQs
- Contact Us
- Give Us Feedback

Business Entities
UCC or Tax Liens
Court Services
Additional Services

CB&I LLC

General

SCC ID: T0661316
Entity Type: Foreign Limited Liability Company
Jurisdiction of Formation: TX
Date of Formation/Registration: 7/7/2016
Status: Active

Principal Office

2103 RESEARCH FOREST DRIVE
THE WOODLANDS TX77380

Registered Agent/Registered Office

CT CORPORATION SYSTEM
4701 COX RD STE 285
GLEN ALLEN VA 23060
HENRICO COUNTY 143

Sele
F
F
R
F
P
C
S
V
M

New S

://www.scc.virginia.gov/

Brooke Marshall
Legal & Compliance Counsel
NCSA - LCR, CO
Office – + 1- 832-513-2891
Mobile – + 1- 346-224-1671
jennifer.marshall@mcdermott.com

4424 West Sam Houston Parkway, North
Houston, Texas 77041
United States
www.mcdermott.com

MCDERMOTT

From: Catanzaro, Paul P
Sent: Wednesday, September 19, 2018 6:14 PM
To: Marshall, Jennifer <Jennifer.Marshall@cbi.com>

CERTIFICATE OF NO COLLUSION:

The undersigned, acting on behalf of CB&I LLC, does hereby certify in connection with the procurement and proposal to which this Certificate of No Collusion is attached that:

This proposal is not the result of, or affected by, any act of collusion with another person engaged in the same line of business or commerce; nor is this proposal the result of, or affected by, any act of fraud punishable under Article 1.1 of Chapter 12 of Title 18.1 of the Code of Virginia, 1950, as amended (18.2-498.1 et seq.).

The undersigned declares that the person or persons signing this proposal is/are fully authorized to sign the proposal on behalf of the firm listed and to fully bind the firm listed to all conditions and provisions thereof.

Respectfully submitted this 2nd day of October 2018, 2015.

CB&I LLC
Legal Name of Entity

By: Paul P Catanzaro (SEAL) (See attached Certification of Resolution & Authority)
Signature of Authorized Representative

Robert E. Stumpf, Assistant Secretary

Print Name: Paul P. Catanzaro

Print Title: Business Development Manager

Date: October 2, 2018

ACKNOWLEDGEMENT

State of Georgia
In the County/City of Fulton, **to-wit:**

The foregoing Certification of No Collusion was subscriber and sworn to before me by Paul P. Catanzaro (Print Name), Business Development Mgr (Print Title) on behalf of CB&I LLC (Print Name of Entity) on this 2nd day of October (month), 2018 (year).

Carole L. Malone — Carole L. Malone
Notary Public

My commission expires: June 22, 2022

Registration Number: W-00213788

PLEASE RETURN THIS PAGE WITH PROPOSAL SUBMISSION – [REQUIRED]

OFFEROR STATEMENT

The undersigned Offeror hereby certifies that the Offeror has carefully examined all instructions, plans, conditions, specifications and other documents or items of this Request for Proposal and hereby submits this Proposal pursuant to such instructions, plans, conditions, specifications and other documents or items.

Complete if Offeror is an Entity:

WITNESS the following duly authorized signature and seal:

Name of Entity: CB&I LLC
By: Paul P Catanzaro (SEAL) (See attached Certification of Resolution & Authority)
Signature
Shane P. Willoughby,Assistant Secretary
Print Name: Paul P. Catanzaro
Print Title: Business Development Manager

STATE OF Georgia
COUNTY/CITY OF Fulton, to-wit:

The foregoing instrument was acknowledged before me this 2nd day of October (month), 2018 (year) by Paul P. Catanzaro (Print Name), Business Development Manager (Print Title) on behalf of CB&I LLC (Name of Entity).

Carole L. Malone Carole L. Malone [SEAL]
Notary Public

My commission expires: June 22, 2022
Notary registration number: W-00213788

Complete if Offeror is a Sole Proprietor: NOT APPLICABLE
Witness the following signature and seal:

_____ (SEAL)
Signature
Print Name: _____

STATE OF _____
COUNTY/CITY OF _____, to-wit:
The foregoing instrument was acknowledged before me this _____ day of _____ (month), _____ (year) by _____ (Print Name), a sole proprietor.
_____ [SEAL]
Notary Public

My commission expires: _____
Notary registration number: _____
PLEASE RETURN THIS PAGE WITH PROPOSAL SUBMISSION – [REQUIRED]

CB&I TANK AND TANK FOUNDATION
PREBID SKETCHES

Design Data

Code : AWWA D100 - 11
Seismic : Ss=0.27g, S1=0.06g, SC=D
Wind : 90 mph
Snow : 30 psf (pg)
Corrosion Allowance: 0

Preliminary design, final design may vary but will comply with specifications.

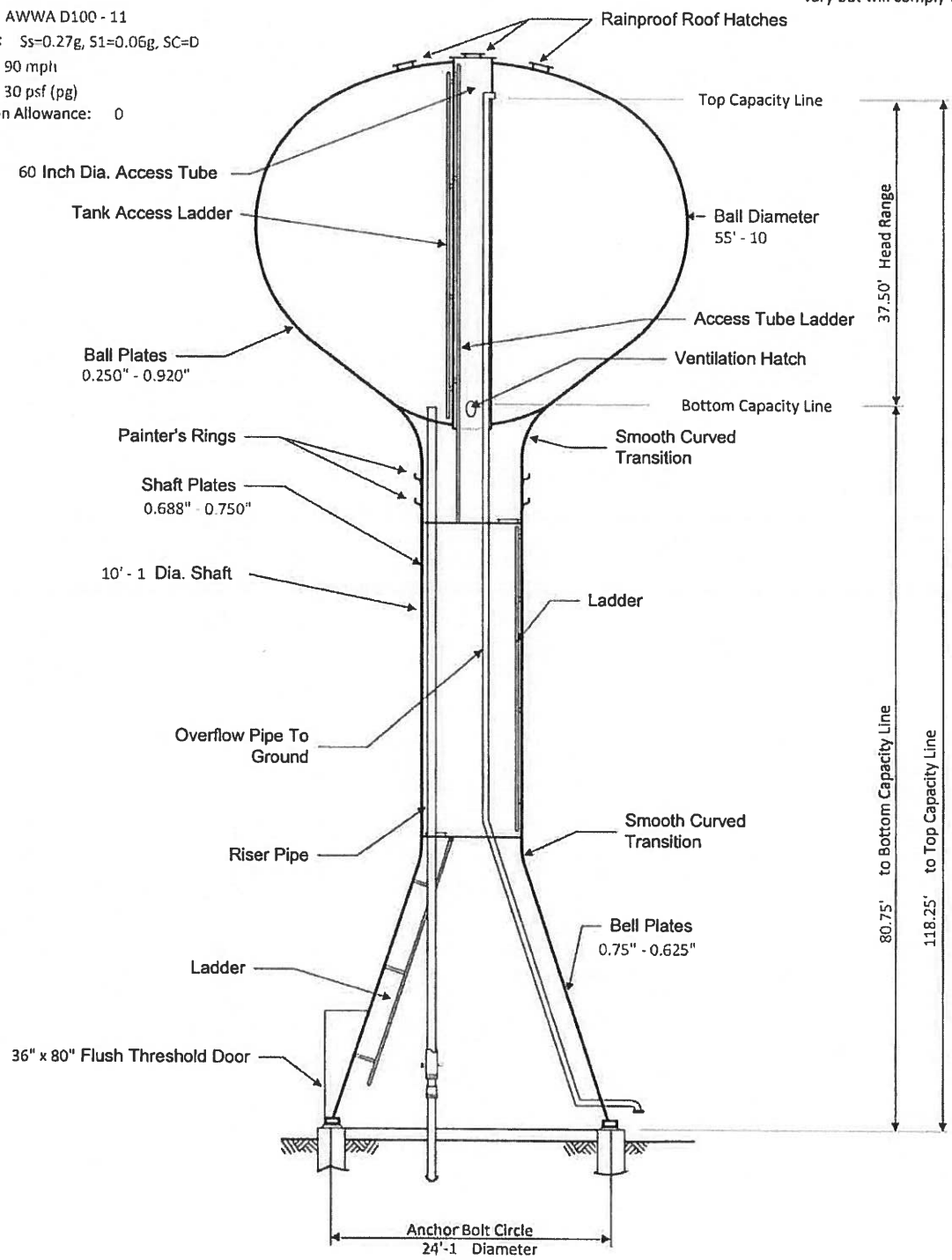

NOT TO SCALE

CB&I

PROPOSED WATERSPHEROID ®

500,000 Gallons Capacity

For County of Fluvanna

Location Palmyra, VA

Estimate No. 37212351 | Made by NMA | Date 5 Jul 2018 | Rev A | Sheet 1

DO NOT USE FOR CONSTRUCTION

NOT DRAWN TO SCALE

Preliminary design, final design may vary but will comply with specifications.

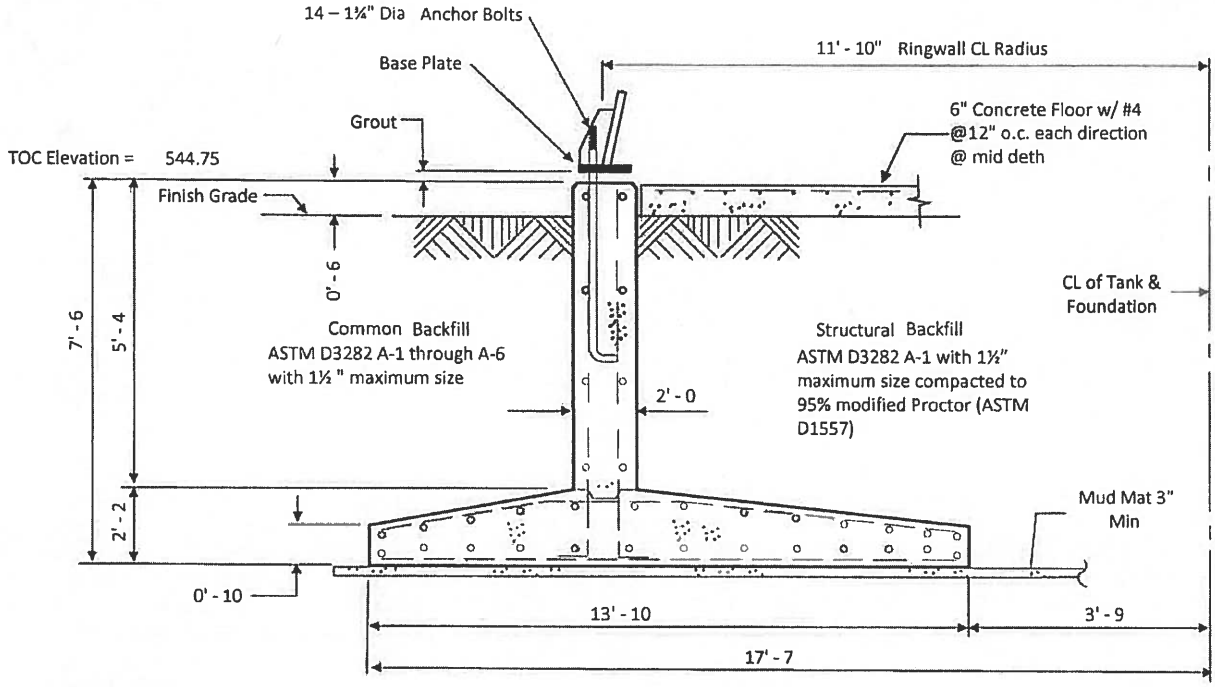

DESIGN BASIS

Spec: ACI 318

Concrete Strength: f'c = 4500 psi

Reinforcing Steel: ASTM A615 Gr. 60

Design Soil Bearing: 5000 psf net.

Bearing capacity must be verified by the Geotechnical Engineer. If soil conditions differ from those reported, modification of the tank and foundation design may be required.

APPROXIMATE QUANTITIES

	Concrete cu yd	Reinforcing Steel lbs
Pedestal	87	12,000
Thrust Block	2	500
Floor	8	1000

Reinforcing Steel includes 5 % for laps and splices.

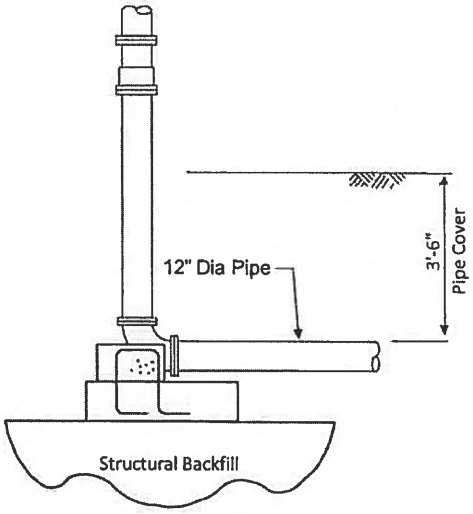

Thrust Block Detail

CBI&

PROPOSED FOUNDATION

500,000 Gallons Capacity

For Zion Crossroads Elevated Water Storage Tank

Location Fluvanna County, VA

Estimate No. 37212351.20w | Made by KND | Date 9 Jul, 2018 | Rev 0 | Sheet 2

CONTRACTOR'S QUALIFICATION STATEMENT

All questions must be answered in full. Additional sheets for clarification of answers or additional information may be attached. This statement must be notarized.

1. Name, address, phone number, IRS number of company.

   CB&I LLC
   11560 Great Oaks Way, Suite 500
   Alpharetta, GA 30022

   Tax ID 36-3046868

   Phone: 770 521 6544

2. Owner, principal officer, date and place organized.

   CB&I LLC - Cesar Canals, Global Vice President - CB&I Storage Tank Solutions

   Company subsidiary CB&I LLC organized to do business in March 2006 in Texas

3. General character of work performed.

   McDermott/CB&I is a worldwide EPC company that designs, fabricates and constructs steel plate structures and are licensed to do business in all 50 states and worldwide.

4. Any work awarded failed to be completed or contracts defaulted on - where and why.

   NO

5. List of three most important recent contracts over $500,000. State the owner, work, approximate cost, place, date started and date completed.

   SEE ATTACHED CBI EXPERIENCE LIST

   1. _____ $
      _____ From _____ To

   2. _____ $
      _____ From _____ To

   3. _____ $
      _____ From _____ To

6. List the contracts upon which you are currently working. Include owner, location, approximate cost, and estimated date of completion.

SEE ATTACHED LIST

7. List your major equipment available for use on this project.

SEE ATTACHED EQUIPMENT LIST

8. List of three material suppliers and amount of credit available.

1. Champion Industrial Supplies $ Unlimited
2. Ranger Steel $ Unlimited
3. SSAB Americas $ Unlimited

9. Bank references and credit available.

1. Bank of America / Contact: Stephen Simpson $ Unlimited
2. $

10. Insurance coverage and amount.

Liability-Property: Minimuum $5,000,000 per occurrence $5,000,000 aggregate
Liability-Personal Injury: Minimum $1,000,000
Vehicle and Equipment: Minimum $1,000,000
Other: N/A
Identify

11. Bonding reference - List surety and highest coverage.

Western Surety Company - Unlimited Amount

12. Subcontractors utilized - List name, address specialty and years experience.

1.

SEE ATTACHED LIST

2.

3.

13. Provide a general description of the experience of the company and its key personnel. CB& has 130 years' experience constructing tanks and built the first elevaated tank in 1894. CB&I invented the Waterspheroid tank design.

Bill Czaska - Chief Engineer Estimator with 38 years of experience. Jim Bohinski - Operations Manager with 40 years of experience.

14. Number of current full-time employees 40,000
Number employed at highest level in past twelve months 45,000

15. Are you on any list of debarred contractors maintained by the U.S. Department of Labor, U.S. Department of Housing and Urban Development, or Agencies of the Commonwealth of Virginia?

Yes _____ No X

The undersigned hereby authorizes and requests any person, firm or corporation to furnish any information requested by Fluvanna County in verification of the recitals comprising this statement of contractor's qualifications:

Contractor: CB&I LLC

By: Paul P Catanzaro
Paul P. Catanzaro

Title: Business Development Manager

Date: October 2. 2018

SEAL (See attached Certification of Resolution & Authority - Robert E. Stumpf, Assistant Secretary)

STATE OF: Georgia

COUNTY OF: Fulton

Paul P. Catanzaro being duly sworn deposes and says that he/she is Business Development Mgr of CB&I LLC and that the answers to the foregoing questions and all statements therein contained are true and correct.

SUBSCRIBED AND SWORN TO BEFORE ME THIS 2nd DAY OF October, 20 18.

NOTARY PUBLIC Carole L. Malone Carole L. Malone, Notary Public

MY COMMISSION EXPIRES June 22, 2022

CONTRACTOR'S QUALIFICATION STATEMENT

CREDIT INFORMATION

A National Construction Services Organization

(Revised 09-21-17)

CB&I LLC

Two CB&I Plaza
2103 Research Forest Drive
The Woodlands, TX 77380-2624
Phone: 832-513-1000 Fax: 832-513-1693
Email: CBI.com

Charter #:	48882-0
Year and State of Corporation:	1979, Texas
Type of Business:	Engineering, Procurement, Fabrication & Construction
Parent Company:	CB&I Holdco, LLC
Federal Tax Identification #:	36-3046868
NAICS #:	237990
Dun & Bradstreet #:	06-401-2560
Dun & Bradstreet Ultimate Parent #:	96-819-1072

Executive Officer:
David W. Barefield, Vice President – Operations
CB&I Plaza, 2103 Research Forest Drive
The Woodlands, TX 77380-2624
Phone: 832-513-1142

Bank Information:
Bank of America
901 Main Street, 10th Floor
TX1-492-10-01
Dallas, Texas 75202-3714
Email: Stephen.r.simpson@baml.com

Account Number: 3756272668
Attn: Stephen Simpson
Phone: 888-715-1000 Ext 25865
Fax: 214-290-9687

Business References:

Champion Industrial Supplies
PO Box 9130
Houston, TX 77261

Contact: Donna Allen, Credit Manager
Phone: 713-921-7183 Fax: 713-921-5450
Email: ciscodba@sbcglobal.net

Ranger Steel
1225 North Loop West #650
Houston, TX 77008

Contact: Nikki Lester, Credit Manager
Phone: 713-633-1306 Fax: 713-980-7351
Email: Credit@Rangersteel.com

SSAB Americas
801 Warrenville Road, Suite 800
Lisle, IL 60532

Contact: Philip Caldwell
Phone: 630-810-4736 Fax: 630-810-4608
Email: credit.lisle@ssab.com

Bonding Agency:
Aon Risk Services Southwest, Inc.
Marathon Oil Tower
5555 San Felipe Street, Suite 1500
Houston, TX 77056
Attn: Melissa Fortier, Regional Director of Operations
Phone: 832-476-6765 Fax: 800-953-4542
Email: Melissa.fortier@aon.com

CHICAGO BRIDGE & IRON COMPANY N.V.
CONSOLIDATED STATEMENTS OF OPERATIONS

	Years Ended December 31,		
	2016	2015	2014
	(In thousands, except per share data)		
Revenue	$ 10,679,558	$ 12,929,504	$ 12,974,930
Cost of revenue	9,653,502	11,417,188	11,508,521
Gross profit	1,026,056	1,512,316	1,466,409
Selling and administrative expense	349,874	387,027	405,208
Intangibles amortization	42,439	57,625	66,506
Equity earnings	(26,826)	(15,689)	(25,225)
Goodwill impairment (Note 6)	655,000	453,100	—
Loss on net assets sold and intangible assets impairment (Note 4)	148,148	1,052,751	—
Other operating expense (income), net	2,339	2,619	(2,373)
Integration related costs	—	—	39,685
(Loss) income from operations	(144,918)	(425,117)	982,608
Interest expense	(105,349)	(94,360)	(83,590)
Interest income	13,004	8,285	8,524
(Loss) income before taxes	(237,263)	(511,192)	907,542
Income tax (expense) benefit	(2,560)	81,231	(271,417)
Net (loss) income	(239,823)	(429,961)	636,125
Less: Net income attributable to noncontrolling interests	(73,346)	(74,454)	(92,518)
Net (loss) income attributable to CB&I	$ (313,169)	$ (504,415)	$ 543,607
Net (loss) income attributable to CB&I per share:			
Basic	$ (3.05)	$ (4.72)	$ 5.03
Diluted	$ (3.05)	$ (4.72)	$ 4.98
Cash dividends on shares:			
Amount	$ 28,733	$ 29,847	$ 30,246
Per share	$ 0.28	$ 0.28	$ 0.28

The accompanying Notes are an integral part of these Consolidated Financial Statements.

Operations – Americas Pipe & Plate Fabrication & Construction

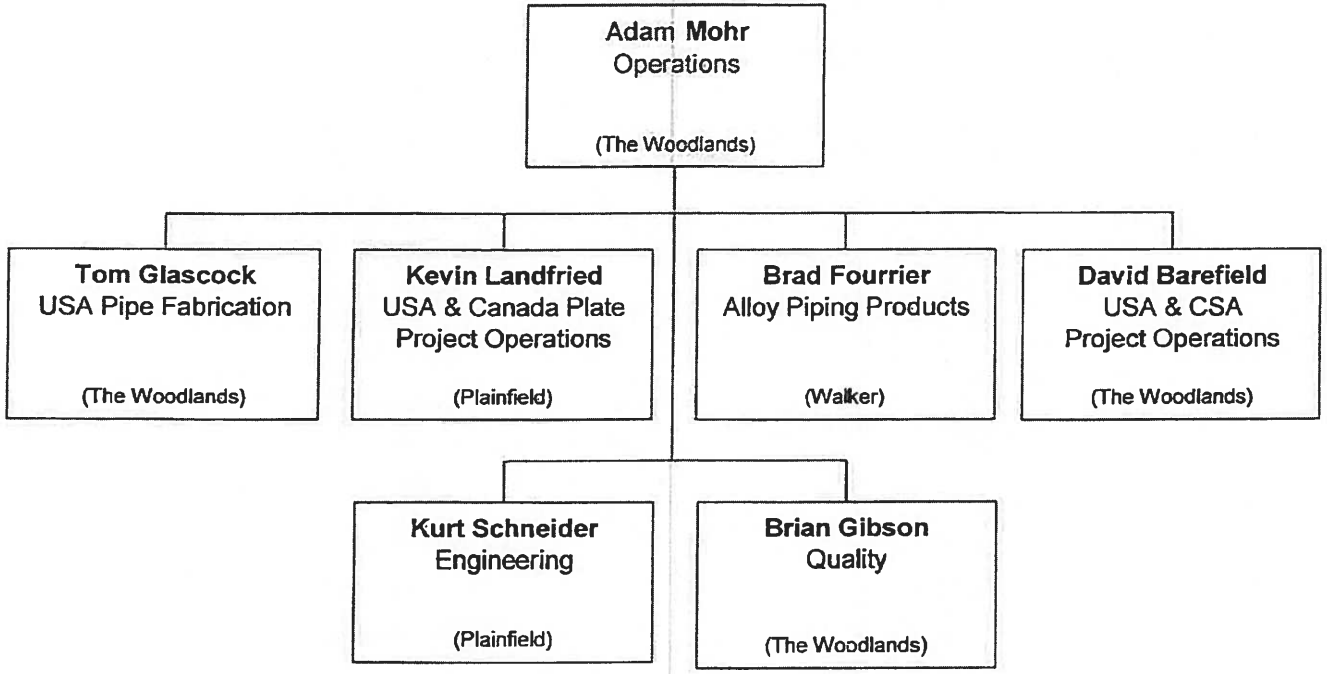

FOR INTERNAL USE ONLY

Estimated Project Schedule
212351 - Palmyra, VA
500M WSD/ 55.833'x37.5'HR/ 10'-0 Shaft (118.25' TCL)

Bid Acceptance & NTP	90 Days
Substantial Completion	360 Days
Final Completion	420 Days

Liquidated Damages	Cost	Days	Cost/Day
Substantial LDs	$0	0 Days	$500 /Day
Final LDs	$0	0 Days	$500 /Day
Total LDs	$0	0 Days	

Description	Start Date	Finish Date	Duration
Substantial Completion	01/07/19	01/03/20	361 Days
Final Completion	01/07/19	03/06/20	424 Days
Issue Contract Papers	01/07/19	01/11/19	1 Weeks
Engineering & Release Bills	01/07/19	01/16/19	2 Weeks
Purchasing & Approval	01/14/19	01/25/19	2 Weeks
Material Order	01/28/19	05/31/19	18 Weeks
Foundation Drawings	01/14/19	02/01/19	3 Weeks
ER & Tank Drawings	02/04/19	02/22/19	3 Weeks
Fabrication of Tank	06/03/19	08/09/19	9 Weeks
Ship to Job Site	07/01/19	08/16/19	4 Weeks
Foundation Approval	02/04/19	03/01/19	4 Weeks
Civil Sub Submittals	03/04/19	03/22/19	3 Weeks
Site Preparation	03/18/19	03/29/19	2 Weeks
Foundation & Yard Piping	03/18/19	04/26/19	6 Weeks
Tank Construction	07/08/19	43714	9 Weeks
Winter Weather	12/07/15	03/25/16	16 Weeks
Field Paint	09/09/19	10/18/19	6 Weeks
Electrical & Instrumentation	10/21/19	11/08/19	3 Weeks
Hydrotest & Disinfection	11/11/19	11/22/19	2 Weeks
Closure Crew	11/11/19	11/22/19	2 Weeks
Site Work & Fencing	11/25/19	12/06/19	2 Weeks
Landscaping & Seeding	11/25/19	12/06/19	2 Weeks
Punch List	12/09/19	12/20/19	2 Weeks

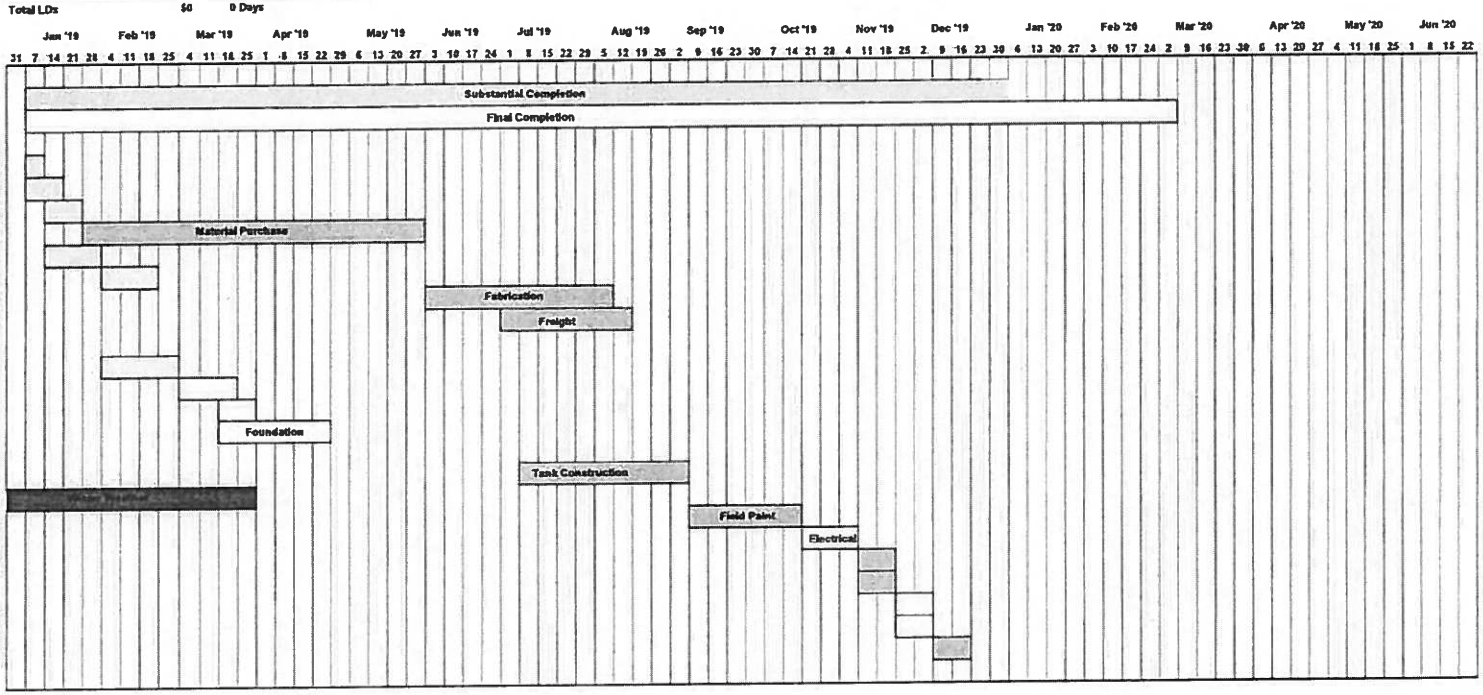

TYPICAL CB&I RESUMES

Dan Johnson -	CB&I Project Manager
Michael Cheney -	CB&I Project Manager
Steve Stalloch -	CB&I Tank Erection Superintendent
Darrell McAllister -	CB&I Tank Erection Superintendent

Daniel J. Johnson
Project Manager

Qualification Highlights and Key Achievements	• Project Manager – CB&I Constructors, Inc. • 35 years experience in steel plate engineering, fabrication and construction industry (PDM & CBI) • Other than training program, all positions held have been in the management of a variety of contracts (water/industrial storage, bridge fabrication, pressure vessels, specialty projects). Majority of career has been spent managing numerous projects simultaneously (average 15 – 20 contracts). • Most projects managed (water/industrial storage/specialty vessels) range from $1 million - $10 million.
Education and Training	BS Civil Engineering – Clarkson University (1977) CB&I Supervisor Incident Prevention Program (SIPP 1 and 2)
Professional Memberships /Registration	Registered Professional Engineer – State of Pennsylvania
Relevant Experience	**CB&I (2001 - Present)**
2001 - Present	**Project Manager, Pittsburgh** Project safety, profit and schedule responsibility for numerous steel plate structure contracts throughout the eastern United States. Representative assignments have included: • Elevated Water Tank (2 MMG Hydropillar) for the City of Dublin, OH • Elevated Water Tanks (2 MMG and 400MG CET's) for the Wannacomet Water Company at Nantucket, MA • Egg Digester and associated vessels for the City of London, OH • Elevated Water Tank (2 MMG CET) for Van Buren Twp., MI • Elevated Water Tank (2 MMG CET) for the City of Oregon, OH • Elevated Water Tank (2 MMG Hydropillar) for the City of Columbus, OH • Ground Storage Water Tank (5 MMG) for the Latham Water District in Colonie, NY • API 650 asphalt storage tank for Downeast Emulsions at Bangor, ME
	Pitt-Des Moines, Inc. (1977 – 2001)
1988 - 2001	**Project Manager, Pittsburgh** Project profit and schedule responsibility for numerous water and industrial storage tank and specialty contracts throughout the eastern United States.

Assignments have included:

- Fire Safety Test Enclosure for US Army at Aberdeen Proving Grounds, Maryland
- TED Park Fueling Terminal for Mobil Oil at Syracuse, NY
- Chilled Water Expansion Project for Brookhaven National Laboratory at Brookhaven, NY
- Wastewater Storage Facility for IBM at Essex Junction, VT
- Wastewater Treatment Expansion Project for Pfizer Corporation at Groton, CT
- Ethylene Terminal Expansion for WPT Corp. at Westlake, LA
- Jet Fuel Storage Expansion for the Metropolitan Air Commission at Minneapolis, MN airport
- Sphere Expansion Facility for Dow-Corning at Midland, MI

1986 - 1988

F.O.B. Project Manager, Pittsburgh
Project profit and schedule responsibility for several bridge fabrication projects throughout the northeastern United States.

Assignments have included:

- Cleveland I-490 Bridge for the State of Ohio (11,000 Tons)
- Third Street Bridge for NYSDOT at Jamestown, NY
- Route 17 Bridges for NYSDOT at Allegany, NY
- I-790 Bridges for NYSDOT at Utica, NY

1981 - 1986

Project Manager, Pittsburgh
Project profit and schedule responsibility for several nuclear, test facility and one of a kind projects.

Assignments have included:

- 7 Million Volt Pulsar Antenna Structure for the U.S. Navy
- High Temperature Test Facility for Factory Mutual Research at W. Gloucester, RI
- Treatment Plant Digester Liners for the City of New York at Brooklyn, NY
- Paper Mill Expansion Program for Container Corporation at Fernandina Beach, FL
- Unit 1 Containment Vessel for Public Service Electric & Gas Corporation at Hope Creek Nuclear Station, NJ

1980

Site Project Manager

Profit and schedule responsibility for the construction and testing of the Thermal Storage System at the Solar One Pilot Power Plant for Southern California Electric at Daggett, CA

Daniel J. Johnson
Project Manager

1978-1979	**Senior Field Engineer** Responsible for the on-site resolution of technical problems related to the construction of the containment vessels at the Seabrook Station Nuclear Plant in Seabrook, NH.
1977	**Plant Engineer** Responsible for the design and construction of several major capital improvements at PDM's steel fabrication plant at Pittsburgh, PA.

Michael Cheney
Project Manager

Qualification Highlights and Key Achievements	• 34 Years of Operations-Sales-Engineering experience all with CB&I. • Currently serving as Project Manager for CB&I Inc • Has held positions as operations manager, project engineer, design engineer, and contract development manager.
Education and Training	Degree: Master of Science Major: Civil -Structural Engineering Institution: University of Illinois Completion Date: 1981 Degree: Bachelor of Science in Civil Engineering Major: Civil Engineering Institution: University of Illinois Completion Date: 1980
Licenses /Registration	General Contractors License – State of Florida Mechanical Contractors License – State of Florida Pollutant Storage Contractors License – State of Florida Underground Utilities Contractors License – State of Florida General Contractors License – State of Tennessee General Contractors License – State of Mississippi Utility Manager License - State of Georgia
Languages	English
Relevant Experience	**CB&I (1981 - Present)**
2013-Present	**Project Manager** Locations: Alpharetta, GA (2011-Present) & Birmingham, AL (01-03) offices Unit: CB&I, Inc. Major Responsibilities: Project management of elevated tank projects ranging from $900k to $7 mil. Annual revenues from completed projects, $22 - $26 mil.
2001-2003	**Operations Manager** Location: Birmingham, AL Unit: CB&I Water. Major Responsibilities: Manage Operations for Southern Region of CB&I Water. Primarily elevated water storage tank projects. Approximately $60 mil in annual revenues for the region.

Michael Cheney
Project Manager

1994-2001	**Contracting Development Manager** Location: Norcross, GA Unit: CB&I Constructors, Inc. Major Responsibilities: Product Sales, development of proposals, pricing and estimates for standard products (flat bottom tanks, repairs and pressure vessels) and special projects. Complete and accurate transmittal of contract information.
1991-1994	**Project Manager** Location: Houston, TX Unit: CB&I Na-con, Inc. Major Responsibilities: Execution of contracts involving spheres, flat bottom tanks and tank repairs in the Houston district. Member of the original Shell Oil – CB&I Partnering Team.
1985-1991	**Project Engineer** Location: Houston, TX Unit: CB&I Na-con, Inc. Major Responsibilities: On-site engineering coordination and subcontract administration on various projects such as the Evaporator-Concentrator projects for HPD, Inc. (Natchez, MS and Bogalusa, LA) and the Fuel System installations at Dyess AFB and Grand Forks AFB
1984-1985	**Project Engineer** Location: Das Island, U. A. E. Unit: Chicago Bridge & Iron Major Responsibilities: On-site engineering coordination for the prestressed concrete containment structures on the Das Island Project
1981-1984	**Trainee and Design Engineer** Location: Oak Brook Unit: Chicago Bridge & Iron Major Responsibilities: Design of foundations for standard products and the prestressed concrete containment structures for the Das Island Project.

Stalloch, Stephen

Supervisor Experience Profile

6/9/2010
Chicago Bridge & Iron
CBI Human Resources

Name **Stalloch, Stephen**

Job title ***Foreman (Superintendent)***

Qualification Highlights and Key Achievements	Mr. Stalloch's responsibilities as a Superintendent include the direction of site personnel and equipment in the execution of steel plate construction and repair. Superintendents are responsible for the entire scope of site construction activities including managing subcontractors, customers and customer representatives. Superintendents are responsible for cost control, schedule, safety, and QA.
Education and Training	**Course Name** • 8.5 Split Roller Race Boom & K • Aerial Work Platforms - Boom • CPR • Crane Medical Questionnaire • Derrick Safety Training • Electrical - Competent Person • Electrical General Awareness Training • Employee Safety Orientation • Employee Safety Orientation Follow-up • Fall Protection Program • Field Construction Orientation • First Aid • Mantis 6010 (30 Ton) • Mobile Crane General Training • OSHA 10 Hour Construction S & H • Rigging Safety Training • Scaffold Training Competent Person • Supervisor Accident Prevention Program 1 • Supervisor Accident Prevention Program 1A • Type 1 Mobile Crane • Type 2 Mobile Crane • Type 7a Derricks
Languages	English
Relevant Experience	**CB&I (02/07/2001 - Present)** • Mr. Stalloch began his career in Steel Plate Construction with PDM in 1995. In early 2001 CBI acquired PDM. Mr. Stalloch joined CBI as an Assistant Foreman. In 2003 he was promoted to Foreman, since then he has been responsible for the field erection of many types of structures including, but not limited to the following. Flat Bottom Tanks Water spheroids Hydro Pillars Low & High Pressure Storage Spheres Storage Tank Repairs Composite Elevated Tanks

Projects	
Dates **Start Date:** **10/19/2009** **Finish Date:** **12/31/2009**	**Foreman: Lyons, NY** • Mr. Stalloch was responsible for the direction of personnel, equipment, cost control, schedule, safety, and QA along with site construction activities including managing subcontractors, customers, and customer representatives. • Duties include, but not limited to the loading and unloading of tools and materials, coordinating safety activities including JSA, tool box talks, audits, and insuring a safe work environment by administering good house- keeping and organization while on the job. Assignments have included: • Erection of 123' X 48' FBCR for the city of Lyons, NY.
Dates **Start Date:** **05/25/2009** **Finish Date:** **10/15/2009**	**Foreman: Nantucket, MA** • Mr. Stalloch was responsible for the direction of personnel, equipment, cost control, schedule, safety, and QA along with site construction activities including managing subcontractors, customers, and customer representatives. • Duties include but not limited to the loading and unloading of tools and materials, coordinating safety activities including JSA, tool box talks, audits, and insuring a safe work environment by administering good house-keeping and organization while on the job. Assignments have included: • Erection of 2MMG CET for the city of Nantucket, MA

McAlister, Darrel

Supervisor Experience Profile

6/9/2010
Chicago Bridge & Iron
CBI Human Resources

Name **McAlister, Darrel**

Job title ***Foreman (Superintendent)***

Qualification Highlights and Key Achievements	Mr. McAlister's responsibilities as a Superintendent include the direction of site personnel and equipment in the execution of steel plate construction and repair. Superintendents are responsible for the entire scope of site construction activities including managing subcontractors, customers and customer representatives. Superintendents are responsible for cost control, schedule, safety, and QA.
Education and Training	**Course Name** • 4 Hour Crew Safety Training • 8.5 Split Roller Race Boom & K • Confined Space Auth Entrants • CPR, AED, & First Aid • Derrick Safety Training • Electrical Competent Person • Electrical General Awareness Training • Employee Safety Orientation • Employee Safety Orientation Follow-Up • Fall Protection Program • Field Construction Orientation • First Aid • Hazardous Communication • Mantis 3612 (18 Ton) • Mobile Crane Safety General Training • OSHA 10 Hour Construction S & H • Rigging Safety Training • Scaffold Training Competent Person • Supervisor Accident Prevention Program 1 • Supervisor Accident Prevention Program 1A • Type 1 Mobile Crane • Type 2 Mobile Crane • Type 7a Derricks
Languages	English
Relevant Experience	**CB&I (02/07/2001 - Present)** • Mr. McAlister began his career in Steel Plate Construction with PDM in 1984. In early 2001 CBI acquired PDM. Mr. McAlister joined CBI as a Foreman, since then he has been responsible for the field erection of many types of structures including, but not limited to the following. Low & High Pressure Storage Spheres — Storage Tank Repairs Waterspheroids — Composite Elevated Tanks Hydropillars — Flat Bottom Tanks

Projects	
Dates **Start Date:** **05/18/2010** **Finish Date:** **07/16/2010**	**Foreman: Ruston, LA** • Mr. McAlister is responsible for the direction of personnel, equipment, cost control, schedule, safety, and QA along with site construction activities including managing subcontractors, customers and customer representatives. • Duties include, but not limited to the loading and unloading of tools and materials, coordinating safety activities including JSA, tool box talks, audits and insuring a safe work environment by administering good house- keeping and organization while on the job. Assignments have included: • Erection of 2MMG CET for the city of Ruston, LA.
Dates **Start Date:** **03/29/2010** **Finish Date:** **05/17/2010**	**Foreman: Liberty, SC** • Mr. McAlister was responsible for the direction of personnel, equipment, cost control, schedule, safety, and QA along with site construction activities including managing subcontractors, customers and customer representatives. • Duties include, but not limited to the loading and unloading of tools and materials, coordinating safety activities including JSA, tool box talks, audits and insuring a safe work environment by administering good house-keeping and organization while on the job. Assignments have included: • Erection of 1MMG CET for the city of Liberty, SC.

VENDOR DATA SHEET

Note: The following information is required as part of your response to this solicitation. Failure to complete and provide this sheet may result in finding your bid nonresponsive.

1. Qualification: The vendor must have the capability and capacity in all respects to satisfy fully all of the contractual requirements.

2. Vendor's Primary Contact:
Name: Paul Catanzaro Phone: 770 521 6544

3. Years in Business: Indicate the length of time you have been in business providing this type of good or service: 130 Years _____ Months

4. Vendor Information:
FIN or FEI Number: 36 3046868 If Company, Corporation, or Partnership
SSN: N/A (If Vendor is a sole proprietor)

5. Indicate below a listing of at least four (4) current or recent accounts, either commercial or governmental, that your company is servicing, has serviced, or has provided similar goods. Include the length of service and the name, address, and telephone number of the point of contact.

SEE ATTACHED EXPERIENCE LIST

Company:	Contact:
Phone:	Email:
Dates of Service:	$$ Value:

Company:	Contact:
Phone:	Email:
Dates of Service:	$$ Value:

Company:	Contact:
Phone:	Email:
Dates of Service:	$$ Value:

Company:	Contact:
Phone:	Email:
Dates of Service:	$$ Value:

By my signature below, I, as a duly authorized representative of the entity named below, certify the accuracy of the foregoing information:

CB&I LLC Date: Ocober 2, 2018
Legal Name of Entity if Applicable (See attached Certification of Resolution & Authority - Robert E. Stumpf - Assistant Secretary)

By: Paul P Catanzaro (SEAL) Print Name: Paul P. Catanzaro
Signature of Authorized Representative

Print Title: Business Development Manager

Vendor Certification (for a Sole Proprietor):

NOT APPLICABLE (SEAL) Print Name: _____ Date: _____
Signature

PLEASE RETURN THIS PAGE WITH PROPOSAL SUBMISSION – [REQUIRED]

PARTIAL LISTING OF CB&I ELEVATED TANKS BUILT IN VIRGINIA

LOCATION	ENGINEER	OWNER	YEAR
Chesterfield, VA 2000M CET / 117.51' TCL	Whitman Requardt Reed Merriwether (804) 272-8700 rmeriwether@wrallp.com	Chesterfield County Donna Clark (804) 748-1617 clarked@chesterfield.gov	2012
Independent Hill, VA 2000M HP / 119.5' TCL	Prince William County Service Authority	Prince William County Service Authority Ron Tatariw (703) 335-8925 Rtatariw@pwcsa.org	2011
Williamsburg, VA 750M WSD / 133.9' TCL	Timmons Group Wes Hummius (804) 200-6385 Wes.Hunnius@timmons.com	City of Williamsburg Daniel Clayton (757) 220-6140 Dclayton@Williamsburgva.gov	2011
Marshall, VA 300M WSD / 159' TCL	Collins Engineering Scott Collins (434) 293-3719 scott@collins-engineering.com	Fauquier County	2010
Richmond, VA 2000M CET / 128.5' TCL	Whitman Requardt & Associates, LLP Dennis Dunham 804-272-8700	City of Richmond	2009
Spotsylvania, VA 1000M WSD / 158.5' TCL	Wiley & Wilson, Inc. Maynard Jones (434) 947-1901	Spotsylvania County Government Wayne Brooks, Construction Mgr (540) 507-7305	2009
King George, VA 500M WSD / 138' TCL	Draper Aden Associates Jeff Kapinos (804) 264-2228	King George County Service Authority Kelly Dixon (540) 775-1657	2009
Smithfield, VA 500M WSD / 151' TCL	Buchart Horn, Inc. Dan Cargnel (410) 247-3501 dcargnel@bh-ba.com	Town of Smithfield Wayne Griffin (757) 365-4200 wgriffin@smithfieldva.gov	2009
Petersburg, VA 500M WSD / 163' TCL	Bury + Partners, Inc. Ken Baybutt (757) 229-1776 kbaybutt@burypartners.com	Commonwealth of Virginia Mrs. Michaele Shriver (804) 862-6212 mshriver@rbc.edu	2008
New Kent, VA 300M WSD / 160' TCL	R. Stuart Royer & Associates Kris Edleman (804) 740-0181 KEdelman@rstuartroyer.com	County of New Kent Mr. Alan Harrison (804) 966-9678 laharrison@co.newkent.state.va.us	2008

LOCATION	ENGINEER	OWNER	YEAR
Prince George, VA 500M WSD / 156' TCL	Draper Aden Associates Jeff Kapinos (804) 264-2228	County of Prince George (804) 733-2625	2007
Loudoun County, VA 2500M HP / 129.5' TCL	Loudoun County Sanitation Authority Bob Krallinger (703) 293-9717	Loudoun County Sanitation Authority Elizabeth Sitter (703) 771-1095	2006
Montclair, VA 2000M HP / 83.5' TCL	Hazen & Sawyer (703) 218-2034	Prince William County Service Authority Joe Darby (703) 335-7900	2006
Grafton Village, VA 1000M HP / 147' TCL	Draper Aden Associates Jeff Kapinos (804) 264-2228 jkapinos@daa.com	County of Stafford Keith Dayton (540) 658-8695	2006
New Kent, VA 750M HP / 152' TCL	R. Stuart Royer & Associates Mr. Kris Edelman (804) 740-0181 kedelman@rstuartroyer.com	County of New Kent Mr. Gary Christie (804) 966-9861	2006
Ruckersville, VA 1000M WSD / 137' TCL	WW Associates, Inc. James McGill, Herbert White, Jason Clark (434) 582-6175 hwhite@wwassociates.net	Greene County Mr. Julius L. Morris, County Administrator	2006
Meadowville, VA 2000M CET / 156.5' TCL	Michael Baker Jr., Inc. Bob Gore (804) 282-1821 rgore@mbakercorp.com	County of Chesterfield Alan Harrison (804) 768-7582 harrisonl@co.chesterfield.va.us	2005
Loudoun County, VA 2500M HP / 129.5' TCL	Whitman Requardt & Associates, LLP Bob Krallinger (703) 293-9717	Loudoun County Sanitation Authority Elizabeth Sitter (703) 771-1095	2005
Haymarket, VA 2000M HP / 108' TCL	Prince William County Service Authority Joe Darby (703) 335-7900	Prince William County Service Authority Joe Darby (703) 335-7900	2005
Occoquan, VA 1000M HP / 119' TCL	Hazen & Sawyer Ron Tatariw (703) 218-2034	Prince William County Service Authority Charlie Mortorana (703) 335-7900	2005

LOCATION	ENGINEER	OWNER	YEAR
Chesapeake, VA 500M WSD / 147.5' TCL	Kellogg Brown & Root (KBR) Bryan Klempa (757) 421-6574	VA Department of Corrections	2005
Dahlgren, VA 500M WSD / 155.5' TCL	Draper Aden Associates Jeff Kapinos (804) 264-2228 JKAPINOS@DAA.COM	King George County Service Authority Scott Sweeney Superintendent of Operations (540) 775-2746	2003
Flat Rock, VA 500M WSD / 137.5' TCL	Draper Aden Associates Tom Cox (804) 264-2228 TCOX@DAA.COM	County of Powhatan Daniel G. Jones, Director (804) 598-5605	2003
King George County, VA 500M WSD / 111.5' TCL	Draper Aden Associates Jeffrey Kapinos 8042642228	King George County Service Authority 5407752746	2003
Midlothian, VA 2000M CET / 126' TCL	Austin Brockenbrough & Associates, LLP Jeff Haas (804) 748-8746	Chesterfield County Robert Wilson (804) 751-4340	2003
Franklin, VA 750M CET / 140' TCL	Gannett Fleming Art Welland/Mike Luning (757) 873-0768	Isle of Wight County Wayne Rountree (757) 357-3191	2003
Quantico, VA 1250M HP / 147' TCL	Earth Tech Inc. Sean Fisher (703) 706-0521	US Navy Khair Issa	2003
Braemar, VA 2000M WSD / 152' TCL	Hazen & Sawyer Ron Tatariw 7032182034	Prince William County Service Authority Purchasing Manager	2002
Burkeville, VA 600M WSD / 151' TCL	Wiley & Wilson, Inc. Tom Crush 8049471901	Commonwealth of Virginia Margaret Jones	2002
Isle of Wight, VA 600M WSD / 140' TCL	Timmons Bill Flowers (804) 379-6155 franklin.vaughan@timmons.com	Clancy & Theys Construction Co. Truitt Gilbreath (757) 873-6869 wjg@ctvirginia.com / tmanlove@ctvirginia.com	2002

LOCATION	ENGINEER	OWNER	YEAR
Mt. Jackson, VA 500M WSD / 140.5' TCL	Patton Harris Rust & Associates Karl Schaeffer 8005527472	Town of Mt. Jackson Charles K. Moore, Town Manager	2002
Prince George County, VA 500M WSD / 162.25' TCL	Draper Aden Associates Jeff Kapinos, Project Engineer (804) 264-2228	Prince George County Gilbert Lee, County Procurement Officer (804) 733-2625	2002
Warsaw, VA 500M HP / 132' TCL	Resource International, LTD Charles Riedlinger (804) 550-9200	Richmond County	2001
Amelia, VA 500M WSD / 155' TCL	Draper Aden Associates Jeff Kapinos (804) 264-2228	Amelia County Phillip Vannoorbeeck, Admin. 8045613039	2001
Prince George County, VA 500M WSD / 145' TCL	Draper Aden Associates Jeffrey P. Kapinos, P.E. (804) 264-2228	Prince George County Board of Supervisors John G. Kines, Jr., County Administrator (804) 733-2600	2001
Rumford, VA 300M WSD / 147.5' TCL	Resource International, LTD Charles D. Riedlinger (804) 550-9200	King William County David Whitlow, Co. Administrator (804) 769-4927	2001
Salem, VA 2500M CET / 128.5' TCL	Finkbeiner, Pettis & Strout Stewart Lassiter (336) 292-2271	City of Salem Randy Smith (540) 375-3063	2000
Manassas, VA 2000M HP / 176.667' TCL	Hazen & Sawyer Ron Tatariw (703) 218-2034	Prince William County Service Authority John Boryschuk (703) 335-7900	2000
Fredericksburg, VA 1500M HP / 155' TCL		City of Fredricksburg	2000
Isle of Wight, VA 1000M HP / 151.5' TCL	R. Stuart Royer & Associates Taylor Turner III (804) 281-0901	Isle of Wight County Wayne Rountree (757) 357-3191	2000
Louisa, VA 500M WSD / 137.5' TCL	Dewberry & Davis LLC Steve E. Hively, PE (804) 643-8061	Louisa County Board of Supervisors Bar Delk, General Manager	2000

LOCATION	ENGINEER	OWNER	YEAR
Dinwiddie County, VA 2000M HP / 174.5' TCL	R. Stuart Royer & Associates (804) 281-0901	Dinwiddie County Water Authority	1999
Leesburg, VA 2500M HP / 64.917' TCL	Burns & McDonnell Mike O'Connell (816) 822-3218	Loudoun County Sanitation Authority Brian Snyder (703) 771-1095	1999
Dumfries, VA 2000M HP / 102' TCL	Hazen & Sawyer Ron Tatariw (703) 218-2034	Prince William County Service Authority (703) 335-7900	1998
Chesapeake, VA 1000M WSD / 161.5' TCL	Wiley & Wilson, Inc. Willy Clingenpeel (757) 523-8988	City of Chesapeake Amar Dwarkanath (757) 382-6671	1998
Front Royal, VA 1000M HP / 157.5' TCL	Hazen & Sawyer Ron Tatariw (703) 218-2034	Town of Front Royal	1997
Petersburg, VA 1000M HP / 97' TCL	Gannett Fleming (804) 873-0768		1997
Stafford, VA 750M HP / 108.5' TCL	Parsons Engineering Science, Inc. (540) 591-7575		1997
Fredericksburg, VA 1000M HP / 132.75' TCL	O'Brien & Gere Engineers, Inc. (301) 731-5622	City of Fredricksburg	1996
New Kent County, VA 1000M HP / 115' TCL			1996
Sussex, VA 1000M HP / 245' TCL	William C. Overman Assocs., PC (804) 499-4887		1996
Bridgewater, VA 500M HP / 140' TCL	Blackwell Engineering, PLC (703) 432-9555	Town of Bridgewater	1996
Bealeton, VA 500M HP / 117.5' TCL	Dewberry & Davis LLC (703) 849-0540		1995
Portsmouth, VA 2500M HP / 136' TCL	Wiley & Wilson, Inc. (804) 947-1264	City of Portsmouth	1994
Haymarket, VA 2000M HP / 131' TCL	BCM Potomac, Inc. (703) 260-0060		1994

LOCATION	ENGINEER	OWNER	YEAR
Emporia, VA 500M PS / 105' TCL			1993
Spotsylvania, VA 150M PS / 155' TCL			1993
Leesburg, VA 2500M HP / 66.5' TCL		Loudoun County Sanitation Authority	1992
Chesterfield, VA 2000M HP / 123.5' TCL			1992
Staunton, VA 500M HP / 115' TCL			1992
Gainesville, VA 2000M HP / 97' TCL			1991
Stafford, VA 2000M HP / 142' TCL	O'Brien & Gere Engineers, Inc. .(301) 731-5622	Stafford County	1991
Fort Story, VA 600M HP / 62' TCL			1991
Virginia Beach, VA 1000M HP / 131.5' TCL	Wiley & Wilson, Inc. (804) 947-1264		1990
Gloucester, VA 1000M HP / 147' TCL			1989
Manassas, VA 1000M PS / 147.75' TCL			1989
Prince George, VA 500M PS / 156.75' TCL			1989
Henrico County, VA 2000M HP / 141' TCL			1988
Danville, VA 500M HP / 160' TCL			1988
Chesterfield, VA 2000M HP / 134' TCL			1986
Chesterfield, VA 2000M HP / 134.5' TCL			1986

LOCATION	ENGINEER	OWNER	YEAR
Dale City, VA 1000M HP / 106' TCL			1986
Pulaski County, VA 500M HP / 157' TCL			1985
Chesterfield, VA 2000M HP / 156' TCL			1982
Virginia Beach, VA 1000M FCT / 86' BCL		City of Virginia Beach	1979
Richmond, VA 2000M HP / 71.5' BCL		City of Richmond	1973

PARTIAL LISTING OF SIMILAR 500,000 GALLON WATERSPHEROID TANKS BUILT ACROSS THE USA

It should be noted that CB&I invented the Waterspheroid style of tank and we have built the largest capacity, the tallest and more than all of our competitors combined.

LOCATION	ENGINEER	OWNER	YEAR
Hawthorn Woods, IL 500M WSD / 133' TCL	Robinson Engineering Greg Kamplain (815) 412-2016 Gkamplain@reltf.com	Aqua Illinois, Inc. James Brooks (815) 614-2060 JBrooks@aquaamerica.com	2018
Midlothian, IL 500M WSD / 136' TCL	Robinson Engineering, Ltd. Greg Kamplain (815) 806-0300 GKamplain@reltd.com	Village of Midlothian Joe Sparrey (708) 389-9658 jsparrey@villageofmidlothian.org	2017
Fox Lake, IL 500M WSD / 116.77' TCL	Trotter and Associates Mark Sikora (630) 587-0470 m.sikora@trotter-inc.com	City of Fox Lake Rocky Horvath (847) 587-3506 horvathr@foxlake.org	2015
La Grange, IL 500M WSD / 133.5' TCL	URS Drew Randell (312) 577-6467 drew.randall@urs.com	La Grange Highlands Sanitary District Jeff Shepler (708) 246-5657 sheppy5@comcast.net	2016
Richmond, RI 500M WSD / 131' TCL	C & E Engineering Partners, Inc. Jon Gerhard (401) 762-1711 jgerhard@ceengineer.com	Town of Richmond Joe Reddish (401) 539-9000 ext 1 townadministrator@richmondri.com	2015
Rochester, MN 500M WSD / 110.875' TCL	WHKS James Loehr	City of Rochester Mona Hoeft - Buyer (507) 280-1666 mhoeft@rpu.org	2016
Shelby, NC 500M WSD / 141' TCL	Willis Engineers Jim Stowe (704) 338-4668 jim@willisengineers.com	City of Shelby Rick Howell City Manager (704) 484-6840	2016
Fort Leonard Wood, MO 500M WSD / 114' TCL	US Army Corp of Engineers Ben Davis (816) 389-3273 Ben.Davis@usace.army.mil	US Army Corp of Engineers Ben Davis (816) 389-3273 Ben.Davis@usace.army.mil	2014
Howell, MI 500M WSD / 135.5' TCL	Tetra Tech, Inc Joseph Siwek (517) 394-8642 joe.siwek@tetratech.com	Marion, Howell, Oceola, Genoa Sewer & Water Auth. Steve Anderson (810) 923-5637 stevea@genoa.org	2013

LOCATION	ENGINEER	OWNER	YEAR
Humboldt, IA 500M WSD / 119.717' TCL	Schlotfeldt Engineering Inc. Derrick Johnson (515) 832-2471 derekj@schlotfeldt.com	City of Humboldt Walter Jensen (515) 332-3435	2013
Statesboro, GA 500M WSD / 135.2' TCL	Hussey Gay Bell & DeYoung, Inc. Inman Beasley/Don Billett (912) 354-4626	City of Statesboro Darren Prather (Purchasing) (912) 764-5468 cityhall@statsboroga.net	2013
Colgate, MD 500M WSD / 94.9' TCL	Whitman Requardt Luke Bathurst (410) 235-3450 ext 1525 lbathurst@wrallp.com	Baltimore County Ron Spartana (410) 887-3531 rspartana@baltimorecountymd.gov	2012
Delavan, WI 500M WSD / 148.5' TCL	Baxter & Woodman, Inc. Harry Harmon (815) 459-1260 hharman@baxterwoodman.com	City of Delavan Susan Kitzman	2012
Griffin, GA 500M WSD / 166' TCL	Paragon Consulting Group Charles Penny 770-412-7700	Spalding County Water & Sewer Authority	2012
Hephzibah, GA 500M WSD / 120' TCL	Southern Partners, Inc. Phillip Green (706) 855-6000 pgreen@southernpartners.net>	City of Hephzibah Roger James (706) 592-4423 cityofhephzibah@bellsouth.net	2012
Mt. Vernon, IL 500M WSD / 117' TCL	HMG Engineers, Inc. Jesse Maynard (618) 594-3711	City of Mt. Vernon Scot Prindiville (618) 242-6830 publicworkssupt@mvn.net	2012
The Villages, FL 500M WSD / 181.33' TCL	Arnett Environmental, LLC Trey Arnett 352-753-4747 tarnett@arnettenvironmental.com	Central Sumter Utility Company, LLC Stephen Drake (352) 753-6250 stephen.drake@thevillages.com	2012
Cambridge City, IN 500M WSD / 134' TCL	Wessler Engineering Sarah Altizer (317) 788-5853 saraha@wesslerengineering.com	Town of Cambridge City Connie Smith, Clerk/Treasurer (765) 478-3522	2011
Fayette, MO 500M WSD / 138' TCL	MECO Engineering Company Ken Woods (573) 221-4048	City of Fayette	2011

LOCATION	ENGINEER	OWNER	YEAR
Fayetteville, AR 500M WSD / 148.5' TCL	McClelland Consulting Engineers, Inc. Robert White (479) 443-2377	City of Fayetteville Shannon Jones (479) 444-3452	2011
Fulton, MD 500M WSD / 167' TCL	KCI Technologies, Inc John Kovacs (410) 315-7911 jkovacs@kci.com	Howard County Micheal Decker (410) 313-6375 mdecker@howardcountymd.gov	2011
Lakewood, IL 500M WSD / 133.583' TCL	Baxter & Woodman, Inc. Harry Harmon (815) 459-1260 hharmon@baxterwoodman.com	Village of Lakewood Paul Rusco (815) 459-3025 pruscko@village.lakewood.il.us	2011
Mustang Ridge, TX 500M WSD / 132.5' TCL	Travis Associates Chase Baromeo / Joe Etzler (512) 295-3465	Creedmoor-MAHA Water Supply Charles Law (512) 243-2113	2011
Ottawa, IL 500M WSD / 190' TCL	City of Ottawa Arnie Bandstra (815) 433-0161 engineer@cityof ottawa.org	City of Ottawa Arnie Bandstra (815) 433-0161 engineer@cityof ottawa.org	2011
Waupun, WI 500M WSD / 144.5' TCL	Foth Infrastructure & Environment Dale Broeckert (608) 242-5931 dbroeckert@foth.com	State of Wisconsin Erik Sande (608) 266-2886 erik.sande@doa.state.wi.us	2011
Cameron, MO 500M WSD / 113' TCL	HDR/Archer Engineers Chris Jones (816) 554-3019 cjones@archerengineers.com	City of Cameron Barbara O'Connor - City Clerk (816) 632-2177	2010
Garden City, GA 500M WSD / 123.07' TCL	Hussey Gay Bell & DeYoung, Inc. Ray Carter,/Bill Lovett 912-354-4626 rcarter@hgbd.com	Savannah Brian McKiernan (630) 586-8113 bmckiernan@centerpoint-prop.com	2010
Gladwin, MI 500M WSD / 135.5' TCL	ROWE Professional Services Doug Scott (810) 341-7500 dscott@rowepsc.com	City of Gladwin Robert McConkie - Admin. (989) 426-9231	2010
Harrison Co. (W13), MS 500M WSD / 140' TCL	Brown and Mitchell Dax Alexander (228) 864-7612 dax@brownandmitchell.com	Harrison County Utility Authority Kamran Pahlavan (228) 868-8752 kped@bellsouth.ne	2010

LOCATION	ENGINEER	OWNER	YEAR
Harrison Co. (W15), MS 500M WSD / 206' TCL	Knesal Engineering Services, Inc Bobby Knesal/BillKnesal (228) 867-9100 bobbyk@knesalengineering.com	Harrison County Utility Authority Kamran Pahlavan (228) 868-8752 kped@bellsouth.net	2010
Jefferson, OH 500M WSD / 126' TCL	Aqua Ohio, Inc. Mike Fritz (330) 832-5764 Ext 202 jmfritz@aquaamerica.com	Aqua Ohio, Inc. Mike Fritz (330) 832-5764 Ext 202 jmfritz@aquaamerica.com	2010
Lower Township, NJ 500M WSD / 152.5' TCL	CMX Pat Westhoven (732) 577-9000	Township of Lower MUA Matt Ecker (609) 886-7146 ex 12 meltmua@comcast.net	2010
North Myrtle Beach, SC 500M WSD / 139.5' TCL	HDR Engineering Eric Williams (910) 575-8800 eric.williams@hdrinc.com	City of North Myrtle Beach Kevin Blayton/ Utility Manager (803) 280-5577	2010
Pinehurst, NC 500M WSD / 169' TCL	McGill Associates, P. A. Bill Grant (910) 295-3159 bill.grant@mcgillengineers.com	Moore County Public Utilities Ben Vaughn Head of Water Utilities (910) 947-6315	2010
Smyrna, TN 500M WSD / 145' TCL	Highers, Koonce & Associates Bryant Griffin (615) 333-7200 bryant.griffin@gmcnetwork.com	Town of Smyrna Jack Reinhard (615) 459-9742 x2111 jack.reinhard@townofsmyrna.org	2010
Wamego, KS 500M WSD / 118.2' TCL	BG Consultants, Inc Thaniel Monaco (785) 537-7448 thaniel.monaco@bgcons.com	City of Wamego Meryl Page, City Manger (785) 456-9119	2010
Wellfleet, MA 500M WSD / 125' TCL	Environmental Partners Paul Millett (617) 657-0200 pcm@envpartners.com	Town of Wellfleet (508) 349-0315	2010
Weston, MO 500M WSD / 103.5' TCL	Larkin Group Greg Kendall (816) 361-0440 gkendall@larkin-grp.com	City of Weston Kim Kirby, City Clerk (816) 640-2752 westoncityhall@embarqmail.com	2010

LOCATION	ENGINEER	OWNER	YEAR
Antioch, IL 500M WSD / 183.5' TCL	Manhard Consulting, Ltd. Karl Krebs (847) 634-5550	Industrial Developments International (404) 479-4000	2009
Coal City, IL 500M WSD / 118.5' TCL	Chamlin & Associates, Inc. Aaron Full/Mike Lutz (815) 223-3344	Village of Coal City Darrell Olson, Supt Pub Works (815) 634-8608	2009
Cotuit, MA 500M WSD / 150' TCL	Stearns & Wheler LLC Russ Kleekamp (508) 362-5680	Cotuit Water Department	2009
Hammond, LA 500M WSD / 166' TCL	Spangler Engineering Chuck Spangler (985) 542-8665 chuckspangler@usa.net	Tangipahoa Water District Larry Byers (985) 345-6457	2009
Harrison Co. (W13), MS 500M WSD / 159' TCL	Brown and Mitchell Dax Alexander (228) 864-7612 dax@brownandmitchell.com	Harrison County Utility Authority Kamran Pahlavan (228) 868-8752 kped@bellsouth.ne	2009
Harrison Co. (W13), MS 500M WSD / 143' TCL	Brown and Mitchell Dax Alexander (228) 864-7612 dax@brownandmitchell.com	Harrison County Utility Authority Kamran Pahlavan (228) 868-8752 kped@bellsouth.ne	2009
King George, VA 500M WSD / 138' TCL	Draper Aden Associates Jeff Kapinos (804) 264-2228	King George County Service Authority Kelly Dixon (540) 775-1657	2009
Lancaster, WI 500M WSD / 176' TCL	Strand Associates, Inc. Steve Kluesner (608) 251-4843 steve.kluesner@strand.com	City of Lancaster Jerry Carroll - DPW (608) 723-7543 jerryc@lancasterwisconsin.com	2009
Marion, IL 500M WSD / 150' TCL	Clarida & Ziegler Engineering Joe Boyke (618) 993-6411 jcboyke@claridaeng.com	City of Marion (618) 997-6281	2009
Marshfield, WI 500M WSD / 156.167' TCL	Bonestroo Tim Grinstead / Mark Rolfs (651) 604-4881	Marshfield Utilities Dave Wasserburger, Wtr Super (715) 387-1195	2009

LOCATION	ENGINEER	OWNER	YEAR
Marysville, KS 500M WSD / 101.5' TCL	Olsson Associates Ben Day (402) 458-5693 bday@aoconsulting.com	City of Marysville James Mueller, Public Works Dir. (785) 562-5331 www.cityofmarysvilleks.com	2009
Millsboro, DE 500M WSD / 103' TCL	Morris & Rirchie Associates, Inc. Don Lassahn (410) 515-9000 dlassahn@mragta.com	Town of Millsboro Steven Ness (301) 431-2400	2009
Morton, IL 500M WSD / 113' TCL	McMahon Associates, Inc Jeff Kellner (920) 751-4200 jkellner@mcmgrp.com	Village of Morton Robert Wraight, P.E. (309) 266-5361 bwraight@morton-il.gov	2009
Nacogdoches, TX 500M WSD / 177' TCL	KSA Engineers, Inc. Alan Draper (936) 637-6061	City of Nacogdoches Jim Jeffers	2009
Smithfield, VA 500M WSD / 151' TCL	Buchart Horn, Inc. Dan Cargnel (410) 247-3501 dcargnel@bh-ba.com	Town of Smithfield Wayne Griffin (757) 365-4200 wgriffin@smithfieldva.gov	2009
Batesville, IN 500M WSD / 130.14' TCL	Tank Industry Consultants, Inc Patrick Brown (317) 271-3100 brown@tankindustry.com	Batesville Water and Gas Utility Mr. Elmer M. Vonderheide, Utility Manager (812) 934-3811	2008
Blue Springs, MS 500M WSD / 157.25' TCL	Precision Engineering Corporation Hubert Foley (662) 534-6205 hubert_pecorpna@bellsouth.net	PUL Alliance John Byers (662) 489-2435	2008
Channahon, IL 500M WSD / 120.5' TCL	Strand Associates, Inc Tim Scholz (815) 744-4200	Village of Channahon Eileen Clark, Village Clerk (815) 467-6644	2008
LaGrange, IN 500M WSD / 139.75' TCL	M. D. Wessler & Associates Sarah S. Altizer, P.E. (317) 788-5853 sarahaltizer@mdwessler.com	County of LaGrange Gary Zehr (260) 463-7802	2008
Manor, TX 500M WSD / 113' TCL	Jay Engineering David Simons (512) 259-3882	City of Manor	2008

LOCATION	ENGINEER	OWNER	YEAR
Manor, TX 500M WSD / 163' TCL	Jay Engineering David Simons (512) 259-3882	City of Manor	2008
Park Forest, IL 500M WSD / 129.5' TCL	Baxter & Woodman, Inc. Ray Koenig (708) 478-2090 Rkoenig@baxterwoodman.com	Village of Park Forest Ken Eyer / Rod Ysaguirre (708) 503-7702 Keyer@villageof parkforest.com	2008
Petersburg, VA 500M WSD / 163' TCL	Bury + Partners, Inc. Ken Baybutt (757) 229-1776 kbaybutt@burypartners.com	Commonwealth of Virginia Mrs. Michaele Shriver (804) 862-6212 mshriver@rbc.edu	2008
Roscoe, IL 500M WSD / 144' TCL	McClure Engineering Associates George Russell (309) 833-4594 G.Russell@McClureEngineering.com	North Park Public Water District John Donahue (815) 633-5461	2008
Alamogordo, NM 500M WSD / 138' TCL	Livingston Associates, P.C. Eddie Livingston (505) 439-8588	City of Alamogordo Dean Hunt, P.E. (505) 439-4220	2007
Anderson, SC 500M WSD / 132' TCL	Design South Professionals, Inc. Josh Fowler (864) 226-3611	Electric City Utilities/City of Anderson John R. Moore Jr, City Mgr	2007
Anderson, SC 500M WSD / 124' TCL	Design South Professionals, Inc. Tim Haynes (864) 226-3611	Electric City Utilities, City of Anderson John R. Moore Jr, City Mgr	2007
Brunswick, GA 500M WSD / 139' TCL	Carter, Goble, Lee, LLC Jerry Jones (912) 264-0357 jbruner@glynncounty-ga.gov	Glynn County Board of Comm Kay Young, Purchasing Agent (912) 554-7136 kay@glynncounty-ga.gov	2007
Elmore, AL 500M WSD / 121' TCL	ADL Inc. Mike Cooper (334) 272-0057	Elmore Water Authority Billy Eddings - Mgr.	2006
Galesburg, MI 500M WSD / 120' TCL	Prein & Newhof Cathy Prein/Mike Schwartz (269) 372-1158	City of Galesburg George R. Weston, Mayor (269) 665-7000	2007

LOCATION	ENGINEER	OWNER	YEAR
Harbert, MI 500M WSD / 131.5' TCL	Merritt Engineering Inc Larry Merritt (269) 428-4424 mei@qtm.net	Chikaming Township Jeanne Dudeck, Township Clerk (269) 469-1676	2007
Keizer, OR 500M WSD / 93.39' TCL	Peterson Engineering Consultants (503) 390-7402	City of Keizer Rob Kissler	2007
Muskegon, MI 500M WSD / 130' TCL	Prein & Newhof Cathy Prein (616) 364-8491	Muskegon County Lynn Zatalokin (231) 724-6281	2007
Prince George, VA 500M WSD / 156' TCL	Draper Aden Associates Jeff Kapinos (804) 264-2228	County of Prince George (804) 733-2625	2007
Seaford, DE 500M WSD / 112.03' TCL	Tank Industry Consultants, Inc Pat Brown (317) 271-3100	Lowe's Home Centers, Inc. Layne Adams, Director (336) 658-4000	2007
Altoona, WI 500M WSD / 157.62' TCL	Short Elliott Hendrickson (SEH) Randy Sanford (715) 720-6241 rsanford@sehinc.com	City of Altoona Lanny Gleason (715) 839-6092 lannyg@ci.altoona.wi.us	2006
Belvidere, IL 500M WSD / 213.5' TCL	Strand Associates, Inc. Jerry Groth/Brian Hackman (608) 251-4843 Jerry.Groth@Strand.com	City of Belvidere Jimmy Grimes	2006
Calumet Park, IL 500M WSD / 124.5' TCL	Robinson Engineering Ltd. Jennifer Prinz (708) 331-6700	Village of Calumet Park Village Clerk's Office	2006
Clinton, IL 500M WSD / 146.7' TCL	MACTEC Engineering Greg Myroth (309) 693-6281	City of Clinton	2006
Fort Walton Beach, FL 500M WSD / 161.5' TCL	Fabre Engineering Inc. Phil Phillips (850) 433-6438 phil.phillips@fabreinc.com	City of Fort Walton Beach Jeff Hyde, Purchasing Dept 850-833-9526	2006
Fulton, MO 500M WSD / 128.5' TCL	Shafer, Kline & Warren Inc Brian Fifer 660-385-6441	City of Fulton 573-592-3111	2006

LOCATION	ENGINEER	OWNER	YEAR
Fulton, MO 500M WSD / 142.5' TCL	Shafer, Kline & Warren Inc Brian Fifer 660-385-6441	City of Fulton 573-592-3111	2006
Holly, MI 500M WSD / 158.5' TCL	Rowe Inc. Jason Plum/Doug Scott 810-341-7500	Village of Holly	2006
Horizon City, TX 500M WSD / 171' TCL	Gray & Jansing & Associates, Inc. Don Bayes 915-852-9093	Horizon Regional Municipal Utility District Mr. Kenneth W. Osmond, President 915-852-3917	2006
Hornsby Bend, TX 500M WSD / 140.5' TCL	Murfee Engineering Company David Malish (512) 327-9204 malish@murfee.com	ECO Resources, Inc	2006
Little River, SC 500M WSD / 158.5' TCL	Little River Water & Sewerage Co Inc Wade D. Lewis, PE 843-249-4025 ext 309	Little River Water & Sewerage Co Wade D. Lewis, PE 843-249-4025 ext 309	2006
Minooka, IL 500M WSD / 87' TCL	Robert E. Hamilton Engineers Tim Juskiewicz (815) 730-3444 trjuskiewicz@rehamilton.org	Village of Minooka Rob Tonarelli (815) 467-8868 rob@minooka.com	2005
New Braunfels, TX 500M WSD / 155.5' TCL	Gallegos Engineering, Inc. Richard Gallegos 210-641-0812	Voss Farms Jamie Arechiga, Mgr.	2006
New Buffalo Twp, MI 500M WSD / 135.5' TCL	Wightman & Associates, Inc. Matt Davis (616) 927-0100 mdavis@wightman-assoc.com	Lakes Gaming, Inc. Nigel Nightingale (952) 449-8592	2006
Pittsboro, NC 500M WSD / 185' TCL	Hobbs Upchurch & Associates Tim Carpenter, Project Mgr. (910) 692-5616	Chatham County Water System Robin James, Purchasing Department (919) 542-8210	2006
Polo, IL 500M WSD / 139' TCL	Willett, Hofmann & Associates, Inc. Matt Hansen 8152843381	City of Polo Mike Gauthier, W & S Oper 8159463514	2005

LOCATION	ENGINEER	OWNER	YEAR
Spring Grove, IL 500M WSD / 140' TCL	Smith Engineering Consultants, Inc. Kevin Flood (815) 385-1778	Village of Spring Grove Trustee Ron Kopke 815-675-2121 werkopke@mc.net	2006
Austin, TX 500M WSD / 207.5' TCL	Jaime Velez 5124577715	City of Austin Purchasing Officer 5124992500	2004
Bartlesville, OK 500M WSD / 111' TCL	Garver Engineers Jay Updike (918) 682-7811	Bartlesville Municipal Authority Ed Gordon, PWD	2004
Brighton, MI 500M WSD / 173.5' TCL	Tetra Tech MPS Darryl Markstrom (810) 225-8430	Livingston Community Water Authority Mark St. Charles, Chairperson	2004
Chesapeake, VA 500M WSD / 147.5' TCL	Kellogg Brown & Root (KBR) Bryan Klempa (757) 421-6574	VA Department of Corrections	2005
Crown Point, IN 500M WSD / 148' TCL	DVG Jeffrey R. Ban 2197692070 jrban@urisp.com	City of Crown Point James D. Metros, Mayor	2004
Dell Rapids, SD 500M WSD / 120.667' TCL	DeWild Grant Reckert & Associates Gordon Krause 7124722531	City of Dell Rapids Vicky Haskell, Finance Off.	2004
Emerald Isle, NC 500M WSD / 142.333' TCL	Criser Troutman Tanner Consulting Engineers David Criser (910) 397-2929 dcriser@cttengineering.com	Bogue Banks Water Corporation Dan Fortin	2005
Farmville, NC 500M WSD / 137' TCL	McDavid Associates, Inc Rich Moore (252) 753-2139	Town of Farmville Richard N. Hicks, Town Mgr (252) 753-5774	2004
Hazlehurst, MS 500M WSD / 131.5' TCL	Williford Gearhart & Knight, Inc John Perry (601) 894-2000	City of Hazlehurst Sue B. Brown, City Clerk	2004
Hightstown, NJ 500M WSD / 130' TCL	Van Cleef Engineering Associates Carmela Roberts, P.E. (609) 259-3263	Borough of Hightstown Candace Gallagher, Clerk	2005

LOCATION	ENGINEER	OWNER	YEAR
Joliet, IL 500M WSD / 173.25' TCL	Raymond Professional Group, Inc. Robert Mattern 3129353323	Illinois Capital Development Board Bill Mabie 2177820505 bmabie@cdb.state.il.us	2004
Lithopolis, OH 500M WSD / 105' TCL	R. D. Zande & Associates Inc Richard Greenwood (614) 486-4383	Village of Lithopolis	2005
Lowell, MA 500M WSD / 114' TCL	Woodard & Curran, Inc. Rob Little 978-557-8150	City of Lowell John F. Cox, City Manager	2005
Lusby, MD 500M WSD / 137' TCL	WATEK Engineering Jill Yamaner 3015952525 bmovahead@watekengineering.com	Calvert County, Md. Donato M. Williams 4105351600 williadm@co.cal.md.us	2004
Moline, IL 500M WSD / 121' TCL	McClure Engineering Associates Ali Gharamti 3097929350	City of Moline Sir or Madame	2004
Monee, IL 500M WSD / 90.5' BCL	Strand Associates, Inc	Village of Monee	2004
New Braunfels, TX 500M WSD / 150' TCL	Kimley-Horn & Associates Scott J. Foster (512) 418-1771 scott.foster@kimley-horn.com	Continental Homes of Texas, L.P. Timothy Pruski (210) 496-2668	2004
North Branch, MN 500M WSD / 130' TCL	WSB & Associates Inc Nancy Zeigler 7635414800	North Branch Water & Light Commission Hank Brooker, Chairman	2004
Pelham, GA 500M WSD / 160' TCL	Stevenson & Palmer Engineering, Inc. David Palmer 2298830332	City of Pelham	2004
Principio, MD 500M WSD / 102' TCL	Morris & Rirchie Associates, Inc. Don Lassahn (410) 515-9000	Stewart Associates Land Management Michael O. Vaughan (717) 771-3535	2004
Ripon, WI 500M WSD / 159.833' TCL	Strand Associates, Inc. Steve Arnold 6082514843 steve.arnold@strand.com	Alliant Energy / WPL Ed Ganser 6089874266 edganser@alliantenergy.com	2004

LOCATION	ENGINEER	OWNER	YEAR
Sevierville, TN 500M WSD / 159.5' TCL	Jordan Jones & Goulding Engineers David J. Kiefer 8659661000	Sevierville Water Systems Steve Flynn, Gen Mgr	2004
Shawano, WI 500M WSD / 119.5' TCL	Bonestroo Rosene Anderlik & Assoc Tom Nennig 2626439023	Shawano Municipal Utilities Herb Lehman - Oper. Supv. 7155263131	2004
Summerville, SC 500M WSD / 130' TCL	Jordan Jones & Goulding Engineers Walter Lagarenne JR PE (843) 747-5889 www.jig.com	Summerville Commissioners of Public Works	2004
Tahlequah, OK 500M WSD / 146.5' TCL	Holloway Updike & Bellen, Inc. Jay Updike 9186827811	Tahlequah Public Works Authority Stanley Day, Gen Manager 9184562564	2004
Taylors Creek, OH 500M WSD / 130' TCL	Burgess & Niple Ken Timko 5135790042	City of Cincinnati 5133523209	2004
Wheeling, WV 500M WSD / 163' TCL	Vaughn, Coast & Vaughn Morgan Coast (740) 695-7256	Ohio County Development Authority Greg Stewart, Secretary (304) 234-3628	2004
Ann Arbor, MI 500M WSD / 193.297' TCL	Black & Veatch Wayne Madsen (313) 962-9117 brozjj@bv.com	City of Ann Arbor Brian Steglitz, PE (734) 994-2840 bsteglitz@ci.ann-arbor.mi.us	2003
Appleton, WI 500M WSD / 131' TCL	McMahon Associates, Inc Gary Rosenbeck (920) 751-4200	City of Appleton Duane Leaf, Director of Utilities	2003
Belmont, MI 500M WSD / 130' TCL	Prein & Newhof Richard Reimbold (616) 364-8491	Plainfield Charter Township Jeff Bergstrom	2003
Beloit, WI 500M WSD / 131' TCL	Strand Associates, Inc Steve Arnold 6082514843	Alliant Energy - WP&L Gail Martinson, GO-5 Sourcing	2003
Booneville, MS 500M WSD / 145' TCL	Moore Engineering Company Troy Moore 6627282101	City of Booneville Booneville City Hall	2003

LOCATION	ENGINEER	OWNER	YEAR
CHESTERFIELD, SC 500M WSD / 141' TCL	B.P. Barber & Associates, Inc. Francis J. Iwanicki 8437674602	Town of Chesterfield & Town of Cherae	2003
Dahlgren, VA 500M WSD / 155.5' TCL	Draper Aden Associates Jeff Kapinos (804) 264-2228 JKAPINOS@DAA.COM	King George County Service Authority Scott Sweeney Superintendent of Operations (540) 775-2746	2003
Desoto County, MS 500M WSD / 122.5' TCL	EAI/WEI, LLC Tracy M. Huffman (662) 429-2100	DeSoto County David Armstrong	2003
East Dundee, IL 500M WSD / 133' TCL	Gerald J. Heinz & Assoc Jerry Heinz (847) 426-4535	Village of East Dundee Jane Theis, Vlg Clerk	2003
Eureka, IL 500M WSD / 160.5' TCL	A. J. Dowiatt, Inc. Tony Dowiatt (309) 467-6014	City of Eureka City of Eureka City Hall	2003
Flat Rock, VA 500M WSD / 137.5' TCL	Draper Aden Associates Tom Cox (804) 264-2228 TCOX@DAA.COM	County of Powhatan Daniel G. Jones, Director (804) 598-5605	2003
Grass Lake, MI 500M WSD / 147' TCL	OMM Engineering, Inc. Anne M. Heyt, PE. (616) 957-4350	Jackson County Drain Commission Geoffrey Snyder, Commissioner	2003
Hopkins Park, IL 500M WSD / 150' TCL	William A. Randolph, Inc. Thomas Strzelczyk 8478560123	William A. Randolph, Inc. Thomas Strzelczyk 8478560123	2003
Kewanee, IL 500M WSD / 82.5' BCL	McClure Engineering Associates	City of Kewanee	2004
King George County, VA 500M WSD / 111.5' TCL	Draper Aden Associates Jeffrey Kapinos 8042642228	King George County Service Authority 5407752746	2003
Lake City, SC 500M WSD / 133.15' TCL	B.P. Barber & Associates, Inc. Dan Huggins (843) 767-4602	City of Lake City Wilford Barr, Mayor (843) 394-5421	2003

LOCATION	ENGINEER	OWNER	YEAR
Lake Ozark (North Tank), M 500M WSD / 94.1' TCL	Miller / Lindsay Inc Rockne Miller (573) 348-9799	City of Lake Ozark Rachel Kelley, Office of City Clerk	2003
Lake Ozark (South Tank), IL 500M WSD / 124' TCL	Miller/Lindsay Inc Rockne Miller (573) 348-9799	City of Lake Ozark Rachel Kelley, Office of City Clerk	2003
Lincoln, AL 500M WSD / 165' TCL	Goodwyn, Mills & Cawood, Inc. Meridith Holder/Wes Self (205) 879-4462	City of Lincoln Mayor Carroll Watson	2003
Mason, MI 500M WSD / 189.25' TCL	Wolverine Engineers & Surveyors, Inc.	City of Mason	2004
Medford, WI 500M WSD / 122' TCL	Earth Tech Inc. Mr. Jeff Galbraith (715) 342-3006	City of Medford, WI Mr. John Fales	2003
N. Thibodaux, LA 500M WSD / 127' TCL	Picciola & Associates, Inc. Joseph C. Picciola, II (985) 632-5786 picciola@cajunnet.com	Lafourche Parish Water Dist No. 1 The Board of Waterworks Commissioners	2003
Nashville, NC 500M WSD / 159.5' TCL	The Wooten Company John Poetzch (919) 828-0531	County of Nash	2003
North Baltimore, OH 500M WSD	Jones & Henry Engineers, LTD	Village of North Baltimore	2004
Pataskala, OH 500M WSD / 152.5' TCL	Environmental Design Group Stu Wilms 6144339015	City of Pataskala City Administrator	2003
Pinehurst, NC 500M WSD / 176' TCL	County of Moore Public Utilities Jim Tarnow, PE, Proj Mgr (910) 947-6315	County of Moore Public Utilities Dennis L. Brobst, Director (910) 947-6315 drobst@co.moore.nc.us	2003
Plainfield Charter, MI 500M WSD / 135' TCL	Prein & Newhof	Plainfield Charter Township	2004
Rochelle, IL 500M WSD / 111.083' BCL	Baxter & Woodman, Inc.	City of Rochelle	2004

LOCATION	ENGINEER	OWNER	YEAR
Rockford, MI 500M WSD / 125' TCL	OMM Engineering, Inc.	City of Rockford	2004
The Villages of Lady Lake, F 500M WSD / 178' TCL	Grant & Dzuro Trey Arnett, PE (352) 753-6260	The Villages of Lady Lake John Parker	2003
Versailles, OH 500M WSD / 154.5' TCL	Malcolm Pirnie, Inc. Gary Kendall, P.E. 6144302637	Village of Versailles Richard Christian 9375263294	2003
Wauconda, IL 500M WSD / 150' TCL	Crawford, Murphy & Tilly, Inc. Theresa O'Grady 6308201022 togrady@cmtengr.com	Town & Country Homes Tim Kellogg 6309532222 TKELLOGG@TOWNANDCOUNTRYHOMES.COM	2003
West Frankfort, IL 500M WSD / 124.5' TCL	Brown & Roberts, Inc. Matt Tosh (618) 252-8111 brownandroberts@yahoo.com	City of West Frankfort Jack Woolard, Mayor (618) 932-3262	2003
Williamsport, IN 500M WSD / 144' TCL	Hannum Wagle & Cline Engr Eric Smith (812) 234-2551	Town of Williamsport Scott Mathis, President	2003
Williamston, NC 500M WSD / 136.9' TCL	Rivers and Associates, Inc. Marvin Garner (252) 752-4135	County of Martin Tommy W. Bowen, Chairman	2003
Yellow Springs, OH 500M WSD / 139.5' TCL	Greene County DPW Sanitary Eng Jeffery Hissong, Director 9375627450	Greene County Board of Commissioners Steve Stapleton, Cty. Admin 9374272883	2003
Yorkville, GA 500M WSD / 120' TCL	Engineering Strategies, Inc. Ron Harris (770) 429-0001	Paulding County Mr. Joseph Palmer	2003
Baxter, TN 500M WSD / 142.5' TCL	James C. Hailey & Company James Hailey (615) 883-4933	Town of Baxter Jeff Wilhite, Mayor	2002
Beach Park, IL 500M WSD / 132.5' TCL	Trotter and Associates Mark Sikora (630) 587-0470 m.sikora@taiengr.com	DRH Cambridge Homes, Inc. Erik Sandstedt, PE- Director (847) 984-4439	2002

LOCATION	ENGINEER	OWNER	YEAR
Chillicothe, OH 500M WSD / 178' TCL	Raymond Professional Group, Inc. Marvin VanMeter (614) 486-6844 raymondgroup.com	Ohio Department of Administrative Services Kem O'Connor (614) 752-0453	2002
Galesburg, MI 500M WSD / 162.5' TCL	Prein & Newhof Tom Wheat (616) 345-1158 twheat@preinnewhof.com	Charleston Township Mr. Francis Bell, Supervisor	2002
Hafr Al Baten 500M WSD / 112.959' TCL	Al Mabani Mr. Hadi Tohme 02-657-3155	Al Mabani Mr. Hadi Tohme 02-657-3155 engineering@almabani.com.sa	2002
Hartland, MI 500M WSD / 169.5' TCL	Tetra Tech MPS Kevin S. Fern (810) 220-2112	Hartland Township Mr. Greg Bogdanski (810) 632-7498	2002
Hoisington, KS 500M WSD / 124.5' TCL	Bucher Willis & Ratliff Rob Mahan (785) 827-3603	City of Hoisington City Clerk's Office	2002
Milan, MI 500M WSD / 148.3' TCL	Tetra Tech MPS Stephen D'Alecy (734) 665-6000	City of Milan Michael Czymbor, Admin. (734) 439-1501	2002
Mt. Jackson, VA 500M WSD / 140.5' TCL	Patton Harris Rust & Associates Karl Schaeffer 8005527472	Town of Mt. Jackson Charles K. Moore, Town Manager	2002
Mt. Pleasant, MI 500M WSD / 149' TCL	Gourdie-Fraser Craig Goodrich / Pat Machin (231) 946-5874 gourdiefraser.com	Union Charter Township Jim Collin, Township Supervisor (989) 772-4600	2002
New London, WI 500M WSD / 182.5' TCL	Earth Tech Inc. Jeff Galbraith (715) 342-3006	New London Utilities Stephen Thompson, General Manager (920) 982-8516	2002
Oconomowoc, WI 500M WSD / 121' TCL	Ruekert & Mielke, Inc. Kyle Flamank (262) 542-5733	City of Oconomowoc J. Thomas Foti, Mayor	2002
Ozark, MO 500M WSD / 163.2' TCL	E. T. Archer Corporation Richard Baker 4178654083	City of Ozark	2002

LOCATION	ENGINEER	OWNER	YEAR
Perry, OK 500M WSD / 119' TCL	Envirotech Engineering and Consulting, Inc. Ron Erdman (580) 234-8780	City of Perry/Perry Municipal Authority	2002
Perry, OK 500M WSD / 120' TCL	Envirotech Engineering and Consulting, Inc. Ron Erdman (580) 234-8780	City of Perry/Perry Municipal Authority	2002
Philadelphia, MS 500M WSD / 152' TCL	Engineering Service Tim Parker (601) 939-8737	Mississippi Band of Choctaw Indians Phillip Martin, Tribal Chief	2002
Prince George County, VA 500M WSD / 162.25' TCL	Draper Aden Associates Jeff Kapinos, Project Engineer (804) 264-2228	Prince George County Gilbert Lee, County Procurement Officer (804) 733-2625	2002
Rancho Cordova, CA 500M WSD / 115.75' TCL	Tank Industry Consultants, Inc Mr. Steve Meier 6362713100	Southern California Water Company Mr. Mikhail Nisenboym mnisenboym@scwater.com	2002
Shakopee, MN 500M WSD / 112' TCL	Schoell & Madson, Inc. John Karwacki (952) 546-7601	Public Utilities Commission Louis Van Hout, Utilities Mgr. 9524451988	2002
South Elgin, IL 500M WSD / 145' TCL	Baxter & Woodman, Inc. Jim Repp (815) 459-1260 jrepp@baxwood.com	Village of South Elgin Dan Mann (847) 695-2741 pkruse@southelgin.com	2002
Amelia, VA 500M WSD / 155' TCL	Draper Aden Associates Jeff Kapinos (804) 264-2228	Amelia County Phillip Vannoorbeeck, Admin. 8045613039	2001
Bonne Terre, MO 500M WSD / 165' TCL	Sverdrup Facilities, Inc. Robert Messel (314) 552-8714	Missouri Department of Corrections	2001
Brownsville, TN 500M WSD / 168.12' TCL	Askew Hargraves Harcourt & Assoc Ed Hargraves (901) 372-0404	City of Brownsville Webb Banks	2001
Brownwood, TX 500M WSD / 162.5' TCL	Jacob & Martin, Ltd. Ken Martin / Derek Turner (915) 695-1070	Brookesmith Special Utility Dist Lewis Lehman, President (915) 646-5731	2001

LOCATION	ENGINEER	OWNER	YEAR
Delavan, WI 500M WSD / 159.5' TCL	Baxter & Woodman, Inc. James A. Repp (815) 459-1260	City of Delavan Ronald Henriott, Mayor	2001
Elmore, AL 500M WSD / 152' TCL	ADL Inc. Brian D. Brown, P.E. (334) 272-0057	Elmore Water Authority Elmore Water Authority	2001
Grand Forks, ND 500M WSD / 132' TCL	Advanced Engineering & Environmental Services (AE2S) Kevin Martin 7017468087	City of Grand Forks City Auditor (701) 746-2624	2001
Higginsville, MO 500M WSD / 140' TCL	The Larkin Group, Inc. Ron House 8163610440	City of Higginsville, MO City Clerk at City Hall	2001
Hospers, IA 500M WSD / 142.25' TCL	DeWild Grant Reckert & Associates Gary Patton (712) 472-2531	Rural Water System No. 1 Jean M. Still, Water District Manager (712) 752-8318	2001
Huron, OH 500M WSD / 119.25' TCL	Poggemeyer Design Group, Inc. Jim Bing (419) 352-7537	City of Huron Michael Tann, City Manager (419) 433-5000	2001
Jerseyville, IL 500M WSD / 122' TCL	Heneghan and Associates Leo Schleeper / Dean Heneghan (618) 498-6418	City of Jerseyville Yvonne Hartmann, City Clerk (618) 498-3312	2001
Lincoln, AL 500M WSD / 165' TCL	Goodwyn, Mills & Cawood, Inc. Tod Green (205) 879-4462	City of Lincoln Hon. Carroll L. Watson, Mayor	2001
Madison, WI 500M WSD / 153' TCL	Earth Tech Inc. Pat Planton (715) 341-8110	City of Madison Water Utility Dennis Crawley (608) 261-9243	2001
Minooka, IL 500M WSD / 130.5' TCL	Robert E. Hamilton Consult Engr. Joseph A. Regis (815) 730-3444	Village of Minooka Rob Tonarelli - Supt. of Public Works	2001
Mooresville, NC 500M WSD / 144.5' TCL	Willis Engineers Mr. DeBrugl 7043779844	Hickory Sand Company Mr. Propst 8283281846	2001

LOCATION	ENGINEER	OWNER	YEAR
Normal, IL 500M WSD / 129' TCL	Farnsworth & Wylie, Inc. Joe Mikulecky (309) 663-8435	Town of Normal Wendellyn Briggs, Town Clerk	2001
Osceola, WI 500M WSD / 136.5' TCL	Howard R. Green Company Randy D. Surbaugh, P.E. (651) 644-4389	Village of Osceola Harlin O. Owens, Village Aministrator	2001
Otsego, MI 500M WSD / 138.5' TCL	Prein & Newhof Richard Reimbold 6163648491	Allegan County Board of Public Works Mr. Kirke White, Chairman 6166730377	2001
Peshawbestown, MI 500M WSD / 112.5' TCL	Indian Health Service Mark Bader, PE, Design Engr (906) 632-3151	The Grand Traverse Band of Ottawa & Chippewa Indians Joseph R. Huhn, W.W.T.P. Director (231) 271-7376	2001
Prince George County, VA 500M WSD / 145' TCL	Draper Aden Associates Jeffrey P. Kapinos, P.E. (804) 264-2228	Prince George County Board of Supervisors John G. Kines, Jr., County Administrator (804) 733-2600	2001
Rose Hill, KS 500M WSD / 134.15' TCL	Professional Engineering Consultants Ken Martin / Derek Turner (316) 262-2691	City of Rose Hill Lewis Lehman, President 3167762712	2001
Rosemount, MN 500M WSD / 130' TCL	Bonestroo Rosene Anderlik & Assoc Mark Rolfs (651) 636-4600	City of Rosemount Linda Jentink, City Clerk	2001
Sumner, IL 500M WSD / 105' TCL	Connor & Connor, Inc. Mr. Shannon Woodard (618) 544-8623	County of Lawrence, IL Mr. Ivan Ulrich, Chairman (618) 943-2346	2001
Tuscumbia, AL 500M WSD / 149.5' TCL	Engineering Service Associates Inc Mr. Steve Sloan (205) 970-0772	Colbert County Commission Mr. Thomas Pennington, Chairman (256) 386-8504	2001
Volo, IL 500M WSD / 159.5' TCL	Manhard Consulting, Ltd. Peter E. Manhard, P.E. (847) 634-5550	Village of Volo Burnell Russell, President (815) 344-4771	2001
Waunakee, WI 500M WSD / 116.25' TCL	Strand Associates, Inc. Gerald Groth (608) 251-4843	Village of Waunakee Waunakee Utilities Office	2001

LOCATION	ENGINEER	OWNER	YEAR
Waverly, OH 500M WSD / 99.5' TCL	Jones & Henry Engineers, LTD Paul Romano (513) 528-5599	City of Waverly Robert Gausman, City Engineer	2001
Weldon, NC 500M WSD / 91.5' TCL	Green Engineering Leo Green / Ed Green Jr. (252) 237-5365	Town of Weldon George W. Draper, Jr - Mayor 2520364836	2001
Bad Axe, MI 500M WSD / 146' TCL	Osminski & Associates Mr. Osminski (517) 269-7465	City of Bad Axe Mr. Nugent (517) 269-6479	2000
Crisfield, MD 500M WSD / 125.5' TCL	Davis Bowen & Friedel, Inc Bob Palmer (410) 543-9091	City of Crisfield Frederick B. Gerald, III - City Manager	2000
Crockett, TX 500M WSD / 110.44' TCL	Klotz Associates, Inc. Larry Smalley / Priscilla Ochoa (281) 589-7257	City of Crockett Ann McNabb - City Manager (409) 544-5156	2000
Forest Lake, MN 500M WSD / 163.5' TCL	Bonestroo Rosene Anderlik & Assoc Mark Rolff (651) 636-4600	Township of Forest Lake Dorothy Baland, Town Clerk (612) 464-4348	2000
Glendale Heights, IL 500M WSD / 153' TCL	Edwin Hancock Engineering Co. Mr. Paul Flood (708) 865-0300	Village of Glendale Heights Ms. Holly B. Knoll (630) 260-6000	2000
Grand Forks, ND 500M WSD / 126' TCL	Advanced Engineering & Environmental Services (AE2S) Anita Mehle (701) 746-8087	City of Grand Forks Mark Anderson (701) 746-2624	2000
Harlan, IA 500M WSD / 136.5' TCL	Stanley Consultants, Inc Bryce A. Johnson, P.E. (515) 246-8585	Harlan Municipal Utilities Gerald D. Quick (712) 755-5182	2000
Ionia (Lincoln Ave), MI 500M WSD / 140' TCL	Fishbeck, Thompson, Carr & Huber Anthony S. Mourand, PE (616) 676-2666	City of Ionia Thomas Wieczorek, City Manager	2000
Ionia (Tuttle Road), MI 500M WSD / 131' TCL	Fishbeck, Thompson, Carr & Huber Anthony S. Mourand, PE (616) 676-2666	City of Ionia Thomas Wieczorek, City Manager	2000

LOCATION	ENGINEER	OWNER	YEAR
Larose, LA 500M WSD / 137.5' TCL	Picciola & Associates, Inc. Joseph Picciola (504) 632-5786	LaFourche Parish Water District No. 1 Sidney Triche, President (504) 532-6925	2000
Le Center, MN 500M WSD / 134.5' TCL	Bolton & Menk, Inc. H. Delbert Jackman, P.E. (507) 625-4171	City of Le Center Myles McGrath, City Clerk (507) 357-4450	2000
Leesburg, GA 500M WSD / 93' TCL	Stevenson & Palmer Engineering, Inc. John Hilliard (912) 883-0332	City of Leesburg Pat Walsh (912) 759-6464	2000
Louisa, VA 500M WSD / 137.5' TCL	Dewberry & Davis LLC Steve E. Hively, PE (804) 643-8061	Louisa County Board of Supervisors Bar Delk, General Manager	2000
Minden, NE 500M WSD / 114.5' TCL	Olsson Associates Michael D. Milius (308) 995-8706	City of Minden Richard Young - Clerk/Treasurer (308) 832-1820	2000
Monson, MA 500M WSD / 121' TCL	Robert W. Sullivan, Inc. Todd Spooner (617) 523-8227	Commonwealth of Massachusetts David Pouliot 4132833411	2000
Muscatine, IA 500M WSD / 160' TCL	City of Muscatine Gerald Peterson, PE (319) 262-3312	City of Muscatine Gerald Peterson, PE (319) 262-3340	2000
North Liberty, IN 500M WSD / 122.5' TCL	Terrance E. Baugher, PE Terrance E. Baugher (219) 294-5610	Town of North Liberty Paul F. Williams, Jr. / Clerk-Treas.	2000
Port Neches, TX 500M WSD / 126.5' TCL	Bob Shaw Consulting Engineers Bob Shaw (409) 962-0263	City of Port Neches Frances K. Monk, Mayor	2000
Rehoboth Beach, DE 500M WSD / 111.5' TCL	Davis Bowen & Friedel, Inc Bob Palmer (302) 424-1441	City of Rehoboth Beach	2000
San Antonio, TX 500M WSD / 122' TCL	Taylor & Mullins, Inc, Engineers-Consultants Jim Boenig (210) 308-9696	Bexar Metropolitan Water District Tom Moreno, General Manager (210) 357-5708	2000

LOCATION	ENGINEER	OWNER	YEAR
Seymour, CT 500M WSD / 83' TCL	Roald Haestad, Inc. John Walsh 2033375943	BHC Company John Farrell, Purchasing Manager	2000
Suamico, WI 500M WSD / 190' TCL	Foth & Van Dyke Eric Finnilla (920) 496-6850	Town of Suamico Susan Last	2000
Sullivan, IL 500M WSD / 127.75' TCL	Sodemann and Associates, Inc. Gary Ferrante (217) 352-7688	City of Sullivan Floyd Buckalew, City Clerk	2000
Ashland, WI 500M WSD / 130' TCL	Short Elliott Hendrickson (SEH) Steve Campbell (612) 490-2000	City of Ashland Mr. Jim Struck	1999
Blair Township, MI 500M WSD / 145' TCL	Earth Tech Inc. Wayne Langeland (616) 9429600	Grand Traverse County Don Weathers	1999
Fairbury, IL 500M WSD / 125' TCL	Farnsworth & Wylie, Inc. Joseph M. Mikuleckky, P.E. (309) 663-8435	City of Fairbury Brenda DeFries, City Clerk	1999
Frisco, IL 500M WSD / 131.7' TCL	Lawrence A. Lipe & Associates Lawrence Lipe (618) 439-9447	Rend Lake Conservancy Dist Kevin Davis, Gen. Manager (618) 439-4321	1999
Georgetown, IL 500M WSD / 127.5' TCL	Farnsworth & Wylie, Inc. Joseph Mikulecky (309) 663-8435	City of Georgetown Sharon Simmons, City Clerk (217) 662-2525	1999
Kaukauna, WI 500M WSD / 146' TCL	McMahon Associates, Inc. Jeff Kellner, PE (920) 751-4200	City of Kaukauna Jim Jellish, Water Dept. Manager 9207665721	1999
Lake Mills, WI 500M WSD / 133' TCL	Strand Associates, Inc. Steve Arnold (608) 251-4843	City of Lake Mills James Heilman, City Clerk (920) 648-2344	1999
Lyon Township, MI 500M WSD / 100.25' TCL	Orchard, Hiltz & McCliment, Inc. Heather L. Shymanski (734) 522-6711	Charter Township of Lyon Water System Pamela Johnson, Clerk	1999
Nashville, IL 500M WSD / 148.5' TCL	Curry & Associates Capt. Michael D. Curry, P.E. (618) 327-8841	City of Nashville Gary Zimmerman, Clerk (618) 327-3058	1999

LOCATION	ENGINEER	OWNER	YEAR
Oakbrook Terrace, IL 500M WSD / 150' TCL	Consoer Townsend Envirodyne Michael H. Winegard 3129380300	City of Oakbrook Terrace The City of Oakbrook Terrace, Illinois 6309418300	1999
San Antonio, TX 500M WSD / 166' TCL	Pape Dawson Engineers, Inc. David M. Evans (210) 375-9000	San Antonio Water System (SAWS)	1999
Belding, MI 500M WSD / 154' TCL	Fleis & VandenBrink Engineering, Inc. Donald DeVries (616) 541-6000	City of Belding Vance Ishler, City Mgr. (616) 794-1900	1998
Casey, IL 500M WSD / 148.25' TCL	Hannum, Wagle & Cline, Engineering Bradley Bennett / Michael Cline (217) 253-4114	City of Casey City Clerk (217) 932-4885	1998
Cushing, OK 500M WSD / 130.5' TCL	Professional Engineering Consultants Kevin Rood (316) 262-2691	City of Cushing City Hall	1998
Fargo, ND 500M WSD / 122.5' TCL	City of Fargo Vern Tomanek / Robert Welton (701) 241-1545	City of Fargo Office of the City Auditor	1998
Manchester, MD 500M WSD / 93.67' TCL	Tatman & Lee Associates, Inc. Kevin Pampuch 302 791 0700	Town of Manchester Elmer Lippy, Mayor 410 239 3200	1998
Neenah, WI 500M WSD / 125.333' TCL	McMahon Associates, Inc. Jeffrey A. Kellner, P.E. (414) 751-4200	City of Neenah Water Utility Larry Wettering, Water Utility Director (414) 751-4620	1998
Oxford, MI 500M WSD / 148' TCL	Rowe Engineering, Inc. James E. Redding, P.E. (810) 659-3103	Charter Township of Oxford	1998
Prairie Grove, IL 500M WSD / 168' TCL	Smith Engineering Consultants, Inc. Mr. Tim Hartnett, VP Design (815) 385-1778	Terra Cotta Realty Co. Ms. Kathleen Martinez 8154592400	1998
Salem, IL 500M WSD / 138' TCL	Curry & Associates Dennis Dunnill (618) 327-8841	City of Salem Roger Kinney, City Mgr. (618) 548-2222	1998

LOCATION	ENGINEER	OWNER	YEAR
Shelbyville, IN 500M WSD / 134' TCL	Indiana American Water Co. Stacy S. Hoffman, P.E. (317) 885-2400	Indiana American Water Co. Stacy S. Hoffman, P.E. (317) 885-2400	1998
Wauconda, IL 500M WSD / 100.5' TCL	Devery Engineering, Inc. Robert Devery 8475486774	Village of Wauconda Jeff Kuester, Supt of Public Works 8475269610	1998
Westerly, RI 500M WSD / 94.833' TCL	Siegmund & Associates Richard Chiodini 4017852600	Town of Westerly Neftali Soto	1998
Battle Creek, MI 500M WSD / 111' TCL	Jones & Henry Engineers, LTD Andrea Kroma (419) 473-9611	Pennfield Township Carole Bammer, Township Clerk (616) 968-8549	1997

December 11, 2018

Dewberry
4805 Lake Brook Drive
Suite 200
Glen Allen, VA 23060

Attention: Mr. Danylo Villhauer
Associate

Re: IFB #2018-04
Zion Crossroads Elevated Storage Tank

Dear Mr. Villhauer,

In response to your request, this letter confirms the tank design for this project includes a diameter base cone of 29'-9" to anchor bolt circles. The CB&I tank design sketch is attached.

We appreciate the award of this project and look forward to working with you and building a very aesthetically pleasing Waterspheroid tank for Fluvanna County, Virginia.

Sincerely,
On behalf of CB&I LLC

Paul P. Catanzaro

Paul Catanzaro
Business Development Manager
CB&I Storage Tank Solutions
Office: 770 521 6544
Email: paul.catanzaro@ mcdermott.com

Preliminary design, final design may vary but will comply with specifications.

Design Data

Code : AWWA D100 - 11
Seismic : Ss=0.27g, S1=0.066g, SC=D
Wind : 120 mph (ASCE 7-10)
Snow : 30 psf (pg)
Corrosion Allowance: 0

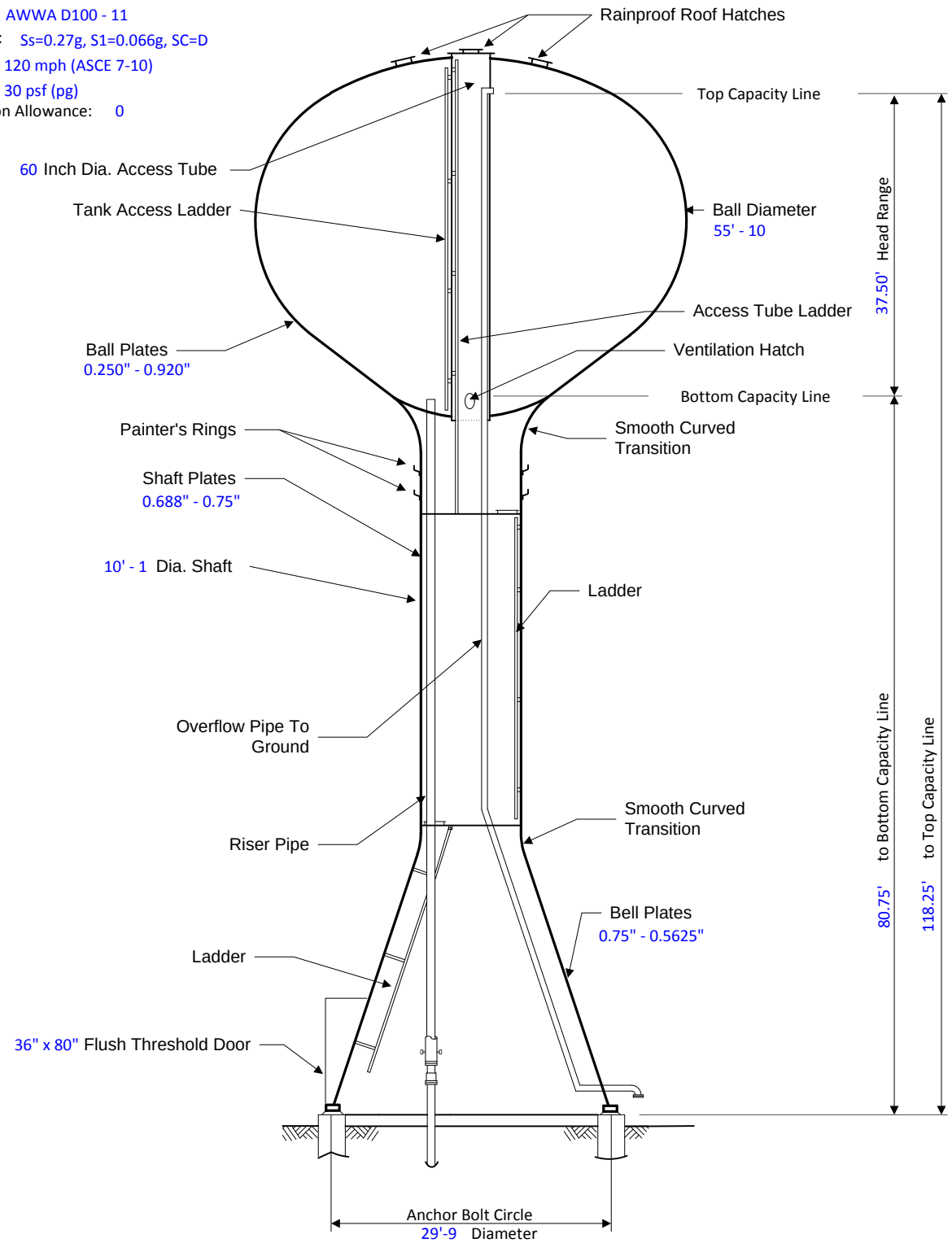

NOT TO SCALE

PROPOSED WATERSPHEROID ®

500,000 Gallons Capacity

For County of Fluvanna

Location Palmyra, VA

Estimate No. 37212351.40t | Made by AKE | Date 25 Oct 2018 | Rev C | Sheet 1

Exhibit C

Notice to Proceed

Date: _____

Project: Zion Crossroads Elevated Water Storage Tank	
Owner: Fluvanna County	Owner's Contract No.:
Contract:	Engineer's Project No.: 50078862
Contractor:	
Contractor's Address: *[send Certified Mail, Return Receipt Requested]*	

You are notified that the Contract Times under the above Contract will commence to run on _____. On or before that date, you are to start performing your obligations under the Contract Documents. In accordance with Article 4 of the Agreement, the number of days to achieve Substantial Completion is 360, and the number of days to achieve readiness for final payment is 420.

Before you may start any Work at the Site, Paragraph 2.01.B of the General Conditions provides that you and Owner must each deliver to the other (with copies to Engineer and other identified additional insureds and loss payees) certificates of insurance which each is required to purchase and maintain in accordance with the Contract Documents.

Owner: Fluvanna County

Given by: Steven M. Nichols

Authorized Signature

Title: County Administrator

Date

Copy to Engineer

Exhibit D

STANDARD PERFORMANCE BOND FOR CONSTRUCTION CONTRACTS

KNOW ALL MEN BY THESE PRESENT:

That , _____the Contractor ("Principal") whose principal place of business is located at _____ and _____ ("Surety") are held and firmly bound unto the County of Fluvanna, Virginia, the Owner ("Obligee") in the amount of Dollars ($ _____), for the payment whereof Principal and Surety bind themselves, their heirs, executors, administrators, successors and assigns, jointly and severally, firmly by these presents.

WHEREAS, Principal has by written agreement dated the ___ day of _____, 20__ entered into a contract with Obligee for which contract (the "Contract") is by reference expressly made a part hereof;

NOW THEREFORE, THE CONDITION OF THIS OBLIGATION is such that, if the Principal shall promptly and faithfully perform said Contract in strict conformity with the plans, specifications and conditions of the Contract, then this obligation shall be null and void; otherwise it shall remain in full force and effect.

Provided, that any alterations which may be made in the terms of the Contract, or in the Work to be done under it, or the giving by the Obligee of any extension of the time for the performance of the Contract, or any other alterations, extensions or forbearance on the part of either or both of the Obligee or the Principal to the other shall not in any way release the Principal and the Surety, or either of them, their heirs, executors, administrators, successors or assigns from their liability hereunder, notice to the Surety of any such alterations, extension, or forbearance being hereby waived.

No action shall be brought on this bond unless brought within one year after: (a) completion of the Contract and all Work thereunder, including expiration of all warranties and guarantees, or (b) discovery of the defect or breach of warranty or guarantee if the action be for such. The Surety represents to the Principal and to the Obligee that it is legally authorized to do business in the Commonwealth of Virginia. Exclusive venue and jurisdiction for any dispute arising hereunder shall be in the courts of the County of Fluvanna, Virginia.

Signed and sealed this ___ day of _____, 20__ .

Principal

By:_____

Title:_____

Date:_____

Surety (must be signed by a Virginia Resident Agent of Surety)

By:_____

Title:_____

Date:_____

Address: _____

_____

Bond No.: _____

Approved as to form:

_____

Fluvanna County Attorney

Exhibit E

STANDARD LABOR AND MATERIAL PAYMENT BOND

KNOW ALL MEN BY THESE PRESENT:

That , _____the Contractor ("Principal") whose principal place of business is located at _____ and _____ ("Surety") are held and firmly bound unto the County of Fluvanna, Virginia, the Owner ("Obligee") in the amount of Dollars ($ _____), for the payment whereof Principal and Surety bind themselves, their heirs, executors, administrators, successors and assigns, jointly and severally, firmly by these presents.

WHEREAS, Principal has by written agreement dated the ___ day of _____, 20__ entered into a contract with Obligee for which contract (the "Contract") is by reference expressly made a part hereof;

NOW THEREFORE, THE CONDITION OF THIS OBLIGATION is such that, if the Principal shall promptly make payment to all claimants as hereinafter defined, for labor performed and material furnished in the prosecution of the Work provided for in the Contract, then this obligation shall be void; otherwise it shall remain in full force and effect, subject, however, to the following conditions.

The Principal and Surety, jointly and severally, hereby agree with Obligee as follows:

1. A claimant is defined as one having a direct contract with the Principal or with a subcontractor of the Principal for labor, material, or both for use in the performance of the Contract. A "subcontractor" of the Principal, for the purposes of this bond only, includes not only those subcontractors having a direct contractual relationship with the Principal, but also any other contractor who undertakes to participate in the Work which the Principal is to perform under the aforesaid Contract, whether there are one or more intervening subcontractors contractually positioned between it and the Principal (for example, a subcontractor). "Labor" and "material" shall include, but not be limited to, public utility services and reasonable rentals of equipment, but only for periods when the equipment rented is actually used at the work site.

2. Subject to the provisions of paragraph 3, any claimant who has performed labor or furnished material in accordance with the Contract documents in the prosecution of the Work provided in the Contract, who has not been paid in full therefor before the expiration of ninety (90) days after the day on which such claimant performed the last of such labor or furnished the last of such materials for which he claims payment, may bring an action on this bond to recover any amount due him for such labor or material, and may prosecute such action to final judgment and have execution on the judgment. The Obligee need not be a party to such action and shall not be liable for the payment of any costs, fees or expenses of any such suit.

3. Any claimant who has a direct contractual relationship with any subcontractor of the Principal from whom the Principal has not required a subcontractor payment bond, but who has no contractual relationship, express or implied, with the Principal, may bring an action on this bond only if he has given written notice to the Principal within one hundred eighty (180) days from the day on which the claimant performed the last of the labor or furnished the last of the materials

STANDARD LABOR AND MATERIAL PAYMENT BOND

for which he claims payment, stating with substantial accuracy the amount claimed and the name of the person for whom the Work was performed or to whom the material was furnished. Notice to the Principal shall be served by registered or certified mail, postage prepaid, in an envelope addressed to the Principal at any place where his office is regularly maintained for the transaction of business. Claims for sums withheld as retainages with respect to labor performed or materials furnished shall not be subject to the time limitations stated in this paragraph 3.

4. No suit or action shall be commenced hereunder by any claimant;

a. Unless brought within one year after the day on which the person bringing such action last performed labor or last furnished or supplied materials, it being understood, however, that if any limitation embodied in this bond is prohibited by any law controlling the construction hereof, the limitation embodied within this bond shall be deemed to be amended so as to be equal to the minimum period of limitation permitted by such law.

b. Other than in a Virginia court of competent jurisdiction and parties agree that exclusive venue and jurisdiction for any dispute arising hereunder shall be in the courts of the County of Fluvanna, Virginia.

5. The amount of this bond shall be reduced by and to the extent of any payment or payments made in good faith hereunder.

Signed and sealed this ___ day of _____, 20__ .

Principal

By:_____

Title:_____

Date:_____

Surety (must be signed by a Virginia Resident Agent of Surety)

By:_____

Title:_____

Date:_____

Address: _____

_____

Bond No.: _____

Approved as to form:

_____

Fluvanna County Attorney

Exhibit F

SECTION C-700
GENERAL CONDITIONS

This is based off of EJCDC C-700 Standard General Conditions of the Construction Contract, but has been substantially modified.

ARTICLE 1 – DEFINITIONS AND TERMINOLOGY

1.01 *Defined Terms*

A. All terms defined in the Invitation for Bids shall have the meaning set forth therein and wherever used in the Bidding Requirements or Contract Documents and printed with initial capital letters, the terms listed below will have the meanings indicated which are applicable to both the singular and plural thereof. In addition to terms specifically defined, terms with initial capital letters in the Contract Documents include references to identified articles and paragraphs, and the titles of other documents or forms.

1. *Addenda*—Written or graphic instruments issued prior to the opening of Bids which clarify, correct, or change the Bidding Requirements or the proposed Contract Documents.

2. *Agreement*—The written instrument which is evidence of the agreement between Owner and Contractor covering the Work.

3. *Application for Payment*—The form acceptable to Owner which is to be used by Contractor during the course of the Work in requesting progress or final payments and which is to be accompanied by such supporting documentation as is required by the Contract Documents.

4. *Asbestos*—Any material that contains more than one percent asbestos and is friable or is releasing asbestos fibers into the air above current action levels established by the United States Occupational Safety and Health Administration.

5. *Bid*—The offer or proposal of a Bidder submitted on the prescribed form setting forth the prices for the Work to be performed including any and all exhibits, addenda or attachments thereto.

6. *Bidder*—The individual or entity who submits a Bid directly to Owner.

7. *Bidding Documents*—The Bidding Requirements and the proposed Contract Documents (including all Addenda).

8. *Bidding Requirements*—The advertisement or invitation to bid, Instructions to Bidders, Bid security of acceptable form, if any, and the Bid Form with any supplements; and any and all Addenda, exhibits, or attachments thereto.

9. *Change Order*—A document recommended by Engineer which is signed by Contractor and Owner and authorizes an addition, deletion, or revision in the Work or an adjustment in the Contract Price or the Contract Times, issued on or after the Effective Date of the Agreement.

10. *Claim*—A demand or assertion by Owner or Contractor seeking an adjustment of Contract Price or Contract Times, or both, or other relief with respect to the terms of the Contract. A demand for money or services by a third party is not a Claim.

11. *Contract*—The entire and integrated written agreement between the Owner and Contractor concerning the Work including any and all Bidding Requirements and all Contract Documents. The Contract supersedes prior negotiations, representations, or agreements, whether written or oral.

12. *Contract Documents*—Those items so designated in the Agreement.. Approved Shop Drawings, other Contractor submittals, and the reports and drawings of subsurface and physical conditions are not Contract Documents unless done so by a written amendment to the Agreement signed by Owner and Contractor.

13. *Contract Price*—The moneys payable by Owner to Contractor for completion of the Work in accordance with the Contract Documents as stated in the Agreement (subject to the provisions of Paragraph 11.03 in the case of Unit Price Work).

14. *Contract Times*—The number of days or the dates stated in the Agreement to: (i) achieve Milestones, if any; (ii) achieve Substantial Completion; and (iii) complete the Work so that it is ready for final payment as evidenced by Engineer's written recommendation of final payment.

15. *Contractor*—The individual or entity with whom Owner has entered into the Agreement.

16. *Cost of the Work*—See Paragraph 11.01 for definition.

17. *Drawings*—That part of the Contract Documents prepared or approved by Engineer which graphically shows the scope, extent, and character of the Work to be performed by Contractor. Shop Drawings and other Contractor submittals are not Drawings as so defined.

18. *Effective Date of the Agreement*—The date indicated in the Agreement on which it becomes effective, but if no such date is indicated, it means the date on which the Agreement is signed and delivered by the last of the two parties to sign and deliver.

19. *Engineer*—The individual or entity named as such in the Agreement.

20. *Field Order*—A written order issued by Engineer which requires minor changes in the Work but which does not involve a change in the Contract Price or the Contract Times.

21. *General Requirements—these General Conditions, the Supplementary Conditions, the County's General Terms and* Sections of Division 1 of the Specifications.

22. *Hazardous Environmental Condition*—The presence at the Site of Asbestos, PCBs, Petroleum, Hazardous Waste, or Radioactive Material in such quantities or circumstances that may present a substantial danger to persons or property exposed thereto.

23. *Hazardous Waste*—The term Hazardous Waste shall have the meaning provided in Section 1004 of the Solid Waste Disposal Act (42 USC Section 6903) as amended from time to time.

24. *Laws and Regulations; Laws or Regulations*—Any and all applicable laws, rules, regulations, ordinances, codes, and orders of any and all governmental bodies, agencies, authorities, and courts having jurisdiction.

25. *Liens*—Charges, security interests, or encumbrances upon Project funds, real property, or personal property.

26. *Milestone*—A principal event specified in the Contract Documents relating to an intermediate completion date or time prior to Substantial Completion of all the Work. Milestones that trigger a partial payment of the Contract Price must be identified by the Contractor in the Bid and defined with specificity.

27. *Notice of Award*—The written notice by Owner to the Successful Bidder stating that upon timely compliance by the Successful Bidder with the conditions precedent listed therein, Owner will sign and deliver the Agreement.

28. *Notice to Proceed*—A written notice given by Owner to Contractor fixing the date on which the Contract Times will commence to run and on which Contractor shall start to perform the Work under the Contract Documents.

29. *Owner*—The individual or entity with whom Contractor has entered into the Agreement and for whom the Work is to be performed.

30. *PCBs*—Polychlorinated biphenyls.

31. *Petroleum*—Petroleum, including crude oil or any fraction thereof which is liquid at standard conditions of temperature and pressure (60 degrees Fahrenheit and 14.7 pounds per square inch absolute), such as oil, petroleum, fuel oil, oil sludge, oil refuse, gasoline, kerosene, and oil mixed with other non-Hazardous Waste and crude oils.

32. *Progress Schedule*—A schedule, prepared and maintained by Contractor, describing the sequence and duration of the activities comprising the Contractor's plan to accomplish the Work within the Contract Times and identifying all Milestones, if any.

33. *Project*—The total construction of which the Work to be performed under the Contract Documents may be the whole, or a part.

34. *Project Manual*—The bound documentary information prepared for bidding and constructing the Work. A listing of the contents of the Project Manual, which may be bound in one or more volumes, is contained in the table(s) of contents.

35. *Radioactive Material*—Source, special nuclear, or byproduct material as defined by the Atomic Energy Act of 1954 (42 USC Section 2011 et seq.) as amended from time to time.

36. *Resident Project Representative*—The authorized representative of the Owner, being Wayne Stephens, Director of Public works and an authorized representative Engineer who may be assigned to the Site or any part thereof.

37. *Samples*—Physical examples of materials, equipment, or workmanship that are representative of some portion of the Work and which establish the standards by which such portion of the Work will be judged.

38. *Schedule of Submittals*—A schedule, prepared and maintained by Contractor, of required submittals and the time requirements to support scheduled performance of related construction activities.

39. *Schedule of Values*—A schedule, prepared and maintained by Contractor, allocating portions of the Contract Price to various portions of the Work identified as Milestones and used as the basis for reviewing Contractor's Applications for Payment, progress payments shall only be made if specifically requested in the Bid and if consistent with the Agreement.

40. *Shop Drawings*—All drawings, diagrams, illustrations, schedules, and other data or information which are specifically prepared or assembled by or for Contractor and submitted by Contractor to illustrate some portion of the Work.

41. *Site*—Lands or areas indicated in the Contract Documents as being furnished by Owner upon which the Work is to be performed, including rights-of-way and easements for access thereto, and such other lands furnished by Owner which are designated for the use of Contractor.

42. *Specifications*—Any and all parts of the Contract Documents (and any and all attachments, exhibits or addenda thereto) consisting of plans, specifications, written requirements for materials, equipment, systems, standards and workmanship as applied to the Work, and certain administrative requirements and procedural matters applicable thereto.

43. *Subcontractor*—An individual or entity having a direct contract with Contractor or with any other Subcontractor for the performance of a part of the Work at the Site.

44. *Substantial Completion*—The time at which the Work (or a specified part thereof) has progressed to the point where, in the opinion of Engineer and Owner, the Work (or a specified part thereof) is sufficiently complete, in accordance with the Contract Documents, so that the Work (or a specified part thereof) can be utilized for the purposes for which it is intended. The terms "substantially complete" and "substantially completed" as applied to all or part of the Work refer to Substantial Completion thereof.

45. *Successful Bidder*—The Bidder submitting a responsive Bid to whom Owner makes an award.

46. *Supplementary Conditions*—That part of the Contract Documents which amends or supplements these General Conditions.

47. *Supplier*—A manufacturer, fabricator, supplier, distributor, materialman, or vendor having a direct contract with Contractor or with any Subcontractor to furnish materials or equipment to be incorporated in the Work by Contractor or Subcontractor.

48. *Underground Facilities*—All underground pipelines, conduits, ducts, cables, wires, manholes, vaults, tanks, tunnels, or other such facilities or attachments, and any encasements containing such facilities, including those that convey electricity, gases, steam, liquid petroleum products, telephone or other communications, cable television, water, wastewater, storm water, other liquids or chemicals, or traffic or other control systems.

49. *Unit Price Work*—Work to be paid for on the basis of unit prices.

50. *Work*—The entire construction or the various separately identifiable parts thereof required to be provided under the Contract Documents. Work includes and is the result of performing or providing all labor, services, and documentation necessary to produce such construction, and furnishing, installing, and incorporating all materials and equipment into such construction, all as required by the Contract Documents.

51. *Work Change Directive*—A written statement to Contractor issued on or after the Effective Date of the Agreement and signed by Owner and recommended by Engineer ordering an addition, deletion, or revision in the Work, or responding to differing or unforeseen subsurface or physical conditions under which the Work is to be performed or to emergencies. A Work Change Directive will not change the Contract Price or the Contract Times but is evidence that the parties expect that the change ordered or documented by a Work Change Directive will be incorporated in a subsequently issued Change Order following negotiations by the parties as to its effect, if any, on the Contract Price or Contract Times.

52. *Final Completion*- The time at which all of the Work on the Project is fully and finally complete to the sole satisfaction of the Owner.

1.02 *Terminology*

A. The words and terms discussed in Paragraph 1.02.B through F are not defined but, when used in the Bidding Requirements or Contract Documents, have the indicated meaning.

B. *Intent of Certain Terms or Adjectives:*

1. The Contract Documents include the terms "as allowed," "as approved," "as ordered," "as directed" or terms of like effect or import to authorize an exercise of professional judgment by Engineer. In addition, the adjectives "reasonable," "suitable," "acceptable," "proper," "satisfactory," or adjectives of like effect or import are used to describe an action or determination of Engineer as to the Work. It is intended that such exercise of professional judgment, action, or determination will be solely to evaluate, in general, the Work for compliance with the information in the Contract Documents and with the design concept of the Project as a functioning whole as shown or indicated in the Contract Documents (unless there is a specific statement indicating otherwise). The use of any such term or adjective is not intended to and shall not be effective to assign to Engineer any duty or authority to supervise or direct the performance of the Work, or any duty or authority to

undertake responsibility contrary to the provisions of Paragraph 9.09 or any other provision of the Contract Documents.

C. *Day:*

1. The word "day" means a calendar day of 24 hours measured from midnight to the next midnight.

D. *Defective:*

1. The word "defective," when modifying the word "Work," refers to Work that is unsatisfactory, faulty, or deficient in that it:

   a. does not conform to the Contract Documents; or

   b. does not meet the requirements of any applicable inspection, reference standard, test, or approval referred to in the Contract Documents; or

   c. has been damaged prior to Engineer's recommendation of final payment (unless responsibility for the protection thereof has been assumed by Owner at Substantial Completion in accordance with Paragraph 14.04 or 14.05).

E. *Furnish, Install, Perform, Provide:*

1. The word "furnish," when used in connection with services, materials, or equipment, shall mean to supply and deliver said services, materials, or equipment to the Site (or some other specified location) ready for use or installation and in usable or operable condition.

2. The word "install," when used in connection with services, materials, or equipment, shall mean to put into use or place in final position said services, materials, or equipment complete and ready for intended use.

3. The words "perform" or "provide," when used in connection with services, materials, or equipment, shall mean to furnish and install said services, materials, or equipment complete and ready for intended use.

4. When "furnish," "install," "perform," or "provide" is not used in connection with services, materials, or equipment in a context clearly requiring an obligation of Contractor, "provide" is implied.

F. Unless stated otherwise in the Contract Documents, words or phrases that have a well-known technical or construction industry or trade meaning are used in the Contract Documents in accordance with such recognized meaning.

ARTICLE 2 – PRELIMINARY MATTERS

2.01 *Delivery of Bonds and Evidence of Insurance*

A. When Contractor delivers the executed counterparts of the Agreement to Owner, Contractor shall also deliver to Owner such bonds as Contractor may be required to furnish.

B. *Evidence of Insurance:* Before any Work at the Site is started, Contractor and Owner shall each deliver to the other, with copies to each additional insured identified in the Supplementary Conditions, certificates of insurance (and other evidence of insurance which either of them or any additional insured may reasonably request) which Contractor and Owner respectively are required to purchase and maintain in accordance with Article 5.

1. Evidence of Insurance shall be provided on industry standard forms (such as Accord Certificate of Insurance 25-S), and shall be signed by an authorized agent of the CONTRACTOR's insurer.

2.02 *Copies of Documents*

A. Owner shall furnish to Contractor up to ten printed or hard copies of the Drawings and Project Manual. Additional copies will be furnished upon request at the cost of reproduction.

2.03 *Commencement of Contract Times; Notice to Proceed*

A. The Contract Times will commence to run on the thirtieth day after the Effective Date of the Agreement or, if a Notice to Proceed is given, on the day indicated in the Notice to Proceed. A Notice to Proceed may be given at any time within 30 days after the Effective Date of the Agreement. In no event will the Contract Times commence to run later than the thirtieth day after the Effective Date of the Agreement.

2.04 *Starting the Work*

A. Contractor shall start to perform the Work on the date when the Contract Times commence to run. No Work shall be done at the Site prior to the date on which the Contract Times commence to run except with the specific written authorization of the Owner.

2.05 *Before Starting Construction*

A. *Preliminary Schedules:* Within 10 days after the Effective Date of the Agreement (unless otherwise specified in the General Requirements), Contractor shall submit to Engineer for timely review:

1. a preliminary Progress Schedule indicating the times (numbers of days or dates) for starting and completing the various stages of the Work, including any Milestones specified in the Contract Documents;

2. a preliminary Schedule of Submittals; and

3. a preliminary Schedule of Values for all of the Work which includes quantities and prices of items which when added together equal the Contract Price and subdivides the Work into component parts in sufficient detail to serve as the basis for progress payments during performance of the Work. Such prices will include an appropriate amount of overhead and profit applicable to each item of Work.

2.06 *Preconstruction Conference; Designation of Authorized Representatives*

A. Before any Work at the Site is started, a conference attended by Owner, Contractor, Engineer, and others as appropriate will be held to establish a working understanding among the parties as to the Work and to discuss the schedules referred to in Paragraph 2.05.A, procedures for handling Shop Drawings and other submittals, processing Applications for Payment, and maintaining required records.

B. At this conference Owner and Contractor each shall designate, in writing, a specific individual to act as its authorized representative with respect to the services and responsibilities under the Contract. Such individuals shall have the authority to transmit instructions, receive information, render decisions relative to the Contract, and otherwise act on behalf of each respective party.

2.07 *Initial Acceptance of Schedules*

A. As soon as practicable, but at minimum 10 days before submission of the first Application for Payment if progress payments are requested in the Bid, a conference attended by Contractor, Owner, Engineer, and others as appropriate will be held to review for acceptability to Engineer as provided below the schedules submitted in accordance with Paragraph 2.05.A. Contractor shall have an additional 10 days to make corrections and adjustments and to complete and resubmit the schedules. No progress payment, if applicable, shall be made to Contractor until acceptable schedules are submitted to Engineer.

1. The Progress Schedule will be acceptable to Owner if it provides an orderly progression of the Work to completion within the Contract Times. Such acceptance will not impose on Owner responsibility for the Progress Schedule, for sequencing, scheduling, or progress of the Work, nor interfere with or relieve Contractor from Contractor's full responsibility therefor.

2. Contractor's Schedule of Submittals will be acceptable to Owner and Engineer if it provides a workable arrangement for reviewing and processing the required submittals.

3. Contractor's Schedule of Values will be acceptable to Owner and Engineer as to form and substance if it provides a reasonable allocation of the Contract Price to component parts of the Work, was specifically requested in the Bid and conforms to all requirements of the Contract Documents and the Agreement.

ARTICLE 3 – CONTRACT DOCUMENTS: INTENT, AMENDING, REUSE

3.01 *Intent*

A. The Contract Documents are complementary; what is required by one is as binding as if required by all.

B. It is the intent of the Contract Documents to describe a functionally complete project (or part thereof) to be constructed in accordance with the Contract Documents. Any labor, documentation, services, materials, or equipment that reasonably may be inferred from the Contract Documents or from prevailing custom or trade usage as being required to produce the

indicated result will be provided whether or not specifically called for, at no additional cost to Owner.

C. Clarifications and interpretations of the Contract Documents shall be issued by Owner as provided in Article 9.

3.02 *Reference Standards*

A. Standards, Specifications, Codes, Laws, and Regulations

1. Reference to standards, specifications, manuals, or codes of any technical society, organization, or association, or to Laws or Regulations, whether such reference be specific or by implication, shall mean the standard, specification, manual, code, or Laws or Regulations in effect at the time of opening of Bids (or on the Effective Date of the Agreement if there were no Bids), except as may be otherwise specifically stated in the Contract Documents.

2. No provision of any such standard, specification, manual, or code, or any instruction of a Supplier, shall be effective to change the duties or responsibilities of Owner, Contractor, or Engineer, or any of their subcontractors, consultants, agents, or employees, from those set forth in the Contract Documents. No such provision or instruction shall be effective to assign to Owner, Engineer, or any of their officers, directors, members, partners, employees, agents, consultants, or subcontractors, any duty or authority to supervise or direct the performance of the Work or any duty or authority to undertake responsibility inconsistent with the provisions of the Contract Documents.

3.03 *Reporting and Resolving Discrepancies*

A. *Reporting Discrepancies:*

1. *Contractor's Review of Contract Documents Before Starting Work*: Before undertaking each part of the Work, Contractor shall carefully study and compare the Contract Documents and check and verify pertinent figures therein and all applicable field measurements. Contractor shall promptly report in writing to Owner and Engineer any conflict, error, ambiguity, or discrepancy which Contractor discovers, or has actual knowledge of, and shall obtain a written interpretation or clarification from Owner before proceeding with any Work affected thereby.

2. *Contractor's Review of Contract Documents During Performance of Work*: If, during the performance of the Work, Contractor discovers any conflict, error, ambiguity, or discrepancy within the Contract Documents, or between the Contract Documents and (a) any applicable Law or Regulation, (b) any standard, specification, manual, or code, or (c) any instruction of any Supplier, then Contractor shall promptly report it to Owner and Engineer in writing. Contractor shall not proceed with the Work affected thereby (except in an emergency as required by Paragraph 6.16.A) until an amendment or supplement to the Contract Documents has been issued by one of the methods indicated in Paragraph 3.04.

3. Contractor shall not be liable to Owner or Engineer for failure to report any conflict, error, ambiguity, or discrepancy in the Contract Documents unless Contractor had actual knowledge thereof or reasonably should have known.

B. *Resolving Discrepancies:*

1. Except as may be otherwise specifically stated in the Contract Documents, the provisions of the Contract Documents shall take precedence in resolving any conflict, error, ambiguity, or discrepancy between the provisions of the Contract Documents and:

   a. the provisions of any standard, specification, manual, or code, or the instruction of any Supplier (whether or not specifically incorporated by reference in the Contract Documents); or

   b. the provisions of any Laws or Regulations applicable to the performance of the Work (unless such an interpretation of the provisions of the Contract Documents would result in violation of such Law or Regulation).

2. Where any Contract Documents deal with the same or similar subject matter, but do not directly conflict, then the requirements of both shall be met and such shall not be considered an ambiguity.

3.04 *Amending and Supplementing Contract Documents*

A. The Contract Documents may be amended to provide for additions, deletions, and revisions in the Work or to modify the terms and conditions thereof by either a Change Order or a Work Change Directive signed by both the Owner and Contractor.

B. The requirements of the Contract Documents may be supplemented, and minor variations and deviations in the Work may be authorized, by one or more of the following ways:

1. A Field Order signed by Owner;

2. Owner's written approval of a Shop Drawing or Sample (subject to the provisions of Paragraph 6.17.D.3); or

3. Owner's written interpretation or clarification.

4. At the ENGINEER's or OWNER's discretion and prior to the execution of the Agreement, a confirmed set of drawings and specifications may be prepared and issued, incorporating all changes issued between the date of Notice of Invitation to Bid and the date of the Agreement. If specifically listed in the Agreement, the confirmed drawings and specifications will become the Drawings and Specifications, completely replacing those previously issued. However, if the confirmed drawings and specifications are not specifically listed in the Agreement, they will be considered to have been provided as a courtesy only, for the convenience of the parties involved, and will have no legal or contractual effect.

3.05 *Reuse of Documents*

A. Contractor and any Subcontractor or Supplier shall not:

1. have or acquire any title to or ownership rights in any of the Drawings, Specifications, or other documents (or copies of any thereof) prepared by or bearing the seal of Engineer or its consultants, including electronic media editions; or

2. reuse any such Drawings, Specifications, other documents, or copies thereof on extensions of the Project or any other project without written consent of Owner and Engineer and specific written verification or adaptation by Engineer.

B. The prohibitions of this Paragraph 3.05 will survive final payment, or termination of the Contract. Nothing herein shall preclude Contractor from retaining copies of the Contract Documents for record purposes.

3.06 *Electronic Data*

A. Unless otherwise stated in the Supplementary Conditions, the data furnished by Owner or Engineer to Contractor, or by Contractor to Owner or Engineer, that may be relied upon are limited to the printed copies (also known as hard copies). Files in electronic media format of text, data, graphics, or other types are furnished only for the convenience of the receiving party. Any conclusion or information obtained or derived from such electronic files will be at the user's sole risk. If there is a discrepancy between the electronic files and the hard copies, the hard copies govern.

B. Because data stored in electronic media format can deteriorate or be modified inadvertently or otherwise without authorization of the data's creator, the party receiving electronic files agrees that it will perform acceptance tests or procedures within 60 days, after which the receiving party shall be deemed to have accepted the data thus transferred. Any errors detected within the 60-day acceptance period will be corrected by the transferring party.

C. When transferring documents in electronic media format, the transferring party makes no representations as to long term compatibility, usability, or readability of documents resulting from the use of software application packages, operating systems, or computer hardware differing from those used by the data's creator.

ARTICLE 4 – AVAILABILITY OF LANDS; SUBSURFACE AND PHYSICAL CONDITIONS; HAZARDOUS ENVIRONMENTAL CONDITIONS; REFERENCE POINTS

4.01 *Availability of Lands*

A. Owner shall furnish the Site. Owner shall notify Contractor of any encumbrances or restrictions not of general application but specifically related to use of the Site with which Contractor must comply in performing the Work. Owner will obtain in a timely manner and pay for easements for permanent structures or permanent changes in existing facilities. If Contractor and Owner are unable to agree on entitlement to or on the amount or extent, if any, of any adjustment in the Contract Price or Contract Times, or both, as a result of any delay in Owner's furnishing the Site or a part thereof, Contractor may make a Claim therefor as provided in Paragraph 10.05.

B. Upon reasonable written request, Owner shall furnish Contractor with a current statement of record legal title and legal description of the lands upon which the Work is to be performed and

Owner's interest therein as necessary for giving notice of or filing a mechanic's or construction lien against such lands in accordance with applicable Laws and Regulations, if such applies.

C. Contractor shall provide for all additional lands and access thereto that may be required for temporary construction facilities or storage of materials and equipment.

4.02 *Subsurface and Physical Conditions*

A. *Reports and Drawings:* The Supplementary Conditions identify:

1. those reports known to Owner of explorations and tests of subsurface conditions at or contiguous to the Site; and

2. those drawings known to Owner of physical conditions relating to existing surface or subsurface structures at the Site (except Underground Facilities).

B. *Limited Reliance by Contractor on Technical Data Authorized:* Contractor may rely upon the accuracy of the "technical data" contained in such reports and drawings, but such reports and drawings are not Contract Documents. Such "technical data" is identified in the Supplementary Conditions. Except for such reliance on such "technical data," Contractor may not rely upon or make any claim against Owner or Engineer, or any of their officers, directors, members, partners, employees, agents, consultants, or subcontractors with respect to:

1. the completeness of such reports and drawings for Contractor's purposes, including, but not limited to, any aspects of the means, methods, techniques, sequences, and procedures of construction to be employed by Contractor, and safety precautions and programs incident thereto; or

2. other data, interpretations, opinions, and information contained in such reports or shown or indicated in such drawings; or

3. any Contractor interpretation of or conclusion drawn from any "technical data" or any such other data, interpretations, opinions, or information.

C. If there are no reports of explorations and tests identified in the Supplementary Conditions, then any such items provided are provided only as a courtesy to CONTRACTOR, and such items are not represented to have been used in part or in whole in the ENGINEER's preparation of the Contract Documents, and CONTRACTOR shall have no grounds for claims related to the information provided therein, including the general accuracy of such information.

4.03 *Differing Subsurface or Physical Conditions*

A. *Notice:* If Contractor believes that any subsurface or physical condition that is uncovered or revealed either:

1. is of such a nature as to establish that any "technical data" on which Contractor is entitled to rely as provided in Paragraph 4.02 is materially inaccurate; or

2. is of such a nature as to require a change in the Contract Documents; or

3. differs materially from that shown or indicated in the Contract Documents; or

4. is of an unusual nature, and differs materially from conditions ordinarily encountered and generally recognized as inherent in work of the character provided for in the Contract Documents;

then Contractor shall, promptly after becoming aware thereof and before further disturbing the subsurface or physical conditions or performing any Work in connection therewith (except in an emergency as required by Paragraph 6.16.A), notify Owner and Engineer in writing about such condition. Contractor shall not further disturb such condition or perform any Work in connection therewith (except as aforesaid) until receipt of written order to do so.

B. *Engineer's Review*: After receipt of written notice as required by Paragraph 4.03.A, Engineer will promptly review the pertinent condition, determine the necessity of Owner's obtaining additional exploration or tests with respect thereto, and advise Owner in writing (with a copy to Contractor) of Engineer's findings and conclusions.

C. *Possible Price and Times Adjustments:*

1. The Contract Price or the Contract Times, or both, may be adjusted to the extent that the existence of such differing subsurface or physical condition causes an increase or decrease in Contractor's cost of, or time required for, performance of the Work; subject, however, to the following:

   a. such condition must meet any one or more of the categories described in Paragraph 4.03.A;

   b. with respect to Work that is paid for on a unit price basis, any adjustment in Contract Price will be subject to the provisions of Paragraphs 9.07 and 11.03; and

   c. acceptance ion writing by the Owner in Owner's sole discretion.

2. Contractor shall not be entitled to any adjustment in the Contract Price or Contract Times if:

   a. Contractor knew of the existence of such conditions at the time Contractor made a final commitment to Owner with respect to Contract Price and Contract Times by the submission of a Bid or becoming bound under a negotiated contract; or

   b. the existence of such condition could reasonably have been discovered or revealed as a result of any examination, investigation, exploration, test, or study of the Site and contiguous areas required by the Bidding Requirements or Contract Documents to be conducted by or for Contractor prior to Contractor's making such final commitment; or

   c. Contractor failed to give the written notice as required by Paragraph 4.03.A.

3. If Owner and Contractor are unable to agree on entitlement to or on the amount or extent, if any, of any adjustment in the Contract Price or Contract Times, or both, a Claim may be made therefor as provided in Paragraph 10.05. However, neither Owner or Engineer, or

any of their officers, directors, members, partners, employees, agents, consultants, or subcontractors shall be liable to Contractor for any claims, costs, losses, or damages (including but not limited to all fees and charges of engineers, architects, attorneys, and other professionals and all court or arbitration or other dispute resolution costs) sustained by Contractor on or in connection with any other project or anticipated project.

4.04 *Underground Facilities*

A. *Shown or Indicated:* The information and data shown or indicated in the Contract Documents with respect to existing Underground Facilities at or contiguous to the Site is based on information and data furnished to Owner or Engineer by the owners of such Underground Facilities, including Owner, or by others. Unless it is otherwise expressly provided in the Supplementary Conditions:

1. Owner and Engineer shall not be responsible for the accuracy or completeness of any such information or data provided by others; and

2. the cost of all of the following will be included in the Contract Price, and Contractor shall have full responsibility for:

   a. reviewing and checking all such information and data;

   b. locating all Underground Facilities shown or indicated in the Contract Documents;

   c. coordination of the Work with the owners of such Underground Facilities, including Owner, during construction; and

   d. the safety and protection of all such Underground Facilities and repairing any damage thereto resulting from the Work.

B. *Not Shown or Indicated:*

1. If an Underground Facility is uncovered or revealed at or contiguous to the Site which was not shown or indicated, or not shown or indicated with reasonable accuracy in the Contract Documents, Contractor shall, promptly after becoming aware thereof and before further disturbing conditions affected thereby or performing any Work in connection therewith (except in an emergency as required by Paragraph 6.16.A), identify the owner of such Underground Facility and give written notice to that owner and to Owner and Engineer. Engineer will promptly review the Underground Facility and determine the extent, if any, to which a change is required in the Contract Documents to reflect and document the consequences of the existence or location of the Underground Facility. During such time, Contractor shall be responsible for the safety and protection of such Underground Facility.

2. If Owner concludes that a change in the Contract Documents is required, a Work Change Directive or a Change Order will be issued to reflect and document such consequences. An adjustment may be made in the Contract Price or Contract Times, or both, to the extent that they are attributable to the existence or location of any Underground Facility that was not shown or indicated or not shown or indicated with reasonable accuracy in the Contract Documents and that Contractor did not know of and could not reasonably have been expected to be aware of or to have anticipated; and if the Owner approves of such

adjustment in its sole discretion. If Owner and Contractor are unable to agree on entitlement to or on the amount or extent, if any, of any such adjustment in Contract Price or Contract Times, Owner or Contractor may make a Claim therefor as provided in Paragraph 10.05.

4.05 *Reference Points*

A. Owner shall provide engineering surveys to establish reference points for construction which in Engineer's judgment are necessary to enable Contractor to proceed with the Work. Contractor shall be responsible for laying out the Work, shall protect and preserve the established reference points and property monuments, and shall make no changes or relocations without the prior written approval of Owner. Contractor shall report to Engineer and Owner whenever any reference point or property monument is lost or destroyed or requires relocation because of necessary changes in grades or locations, and shall be responsible for the accurate replacement or relocation of such reference points or property monuments by professionally qualified personnel.

4.06 *Hazardous Environmental Condition at Site*

A. *Reports and Drawings:* The Supplementary Conditions identify those reports and drawings known to Owner relating to Hazardous Environmental Conditions that have been identified at the Site.

B. *Limited Reliance by Contractor on Technical Data Authorized:* Contractor may rely upon the accuracy of the "technical data" contained in such reports and drawings, but such reports and drawings are not Contract Documents. Such "technical data" is identified in the Supplementary Conditions. Except for such reliance on such "technical data," Contractor may not rely upon or make any claim against Owner or Engineer, or any of their officers, directors, members, partners, employees, agents, consultants, or subcontractors with respect to:

1. the completeness of such reports and drawings for Contractor's purposes, including, but not limited to, any aspects of the means, methods, techniques, sequences and procedures of construction to be employed by Contractor and safety precautions and programs incident thereto; or

2. other data, interpretations, opinions and information contained in such reports or shown or indicated in such drawings; or

3. any Contractor interpretation of or conclusion drawn from any "technical data" or any such other data, interpretations, opinions or information.

C. Contractor shall not be responsible for any Hazardous Environmental Condition uncovered or revealed at the Site which was not shown or indicated in Drawings or Specifications or identified in the Contract Documents to be within the scope of the Work. Contractor shall be responsible for a Hazardous Environmental Condition created with any materials brought to the Site by Contractor, Subcontractors, Suppliers, or anyone else for whom Contractor is responsible.

D. If Contractor encounters a Hazardous Environmental Condition or if Contractor or anyone for whom Contractor is responsible creates a Hazardous Environmental Condition, Contractor

shall immediately: (i) secure or otherwise isolate such condition; (ii) stop all Work in connection with such condition and in any area affected thereby (except in an emergency as required by Paragraph 6.16.A); and (iii) notify Owner and Engineer (and promptly thereafter confirm such notice in writing). Owner shall promptly consult with Engineer concerning the necessity for Owner to retain a qualified expert to evaluate such condition or take corrective action, if any. Promptly after consulting with Engineer, Owner shall take such actions as are necessary to permit Owner to timely obtain required permits and provide Contractor the written notice required by Paragraph 4.06.E.

E. Contractor shall not be required to resume Work in connection with such condition or in any affected area until after Owner has obtained any required permits related thereto and delivered written notice to Contractor: (i) specifying that such condition and any affected area is or has been rendered safe for the resumption of Work; or (ii) specifying any special conditions under which such Work may be resumed safely. If Owner and Contractor cannot agree as to entitlement to or on the amount or extent, if any, of any adjustment in Contract Price or Contract Times, or both, as a result of such Work stoppage or such special conditions under which Work is agreed to be resumed by Contractor, either party may make a Claim therefor as provided in Paragraph 10.05.

F. If after receipt of such written notice Contractor does not agree to resume such Work based on a reasonable belief it is unsafe, or does not agree to resume such Work under such special conditions, then Owner may order the portion of the Work that is in the area affected by such condition to be deleted from the Work. If Owner and Contractor cannot agree as to entitlement to or on the amount or extent, if any, of an adjustment in Contract Price or Contract Times as a result of deleting such portion of the Work, then either party may make a Claim therefor as provided in Paragraph 10.05. Owner may have such deleted portion of the Work performed by Owner's own forces or others in accordance with Article 7.

G. Intentionally omitted.

H. To the fullest extent permitted by Laws and Regulations, Contractor shall indemnify and hold harmless Owner and Engineer, and the officers, directors, members, partners, employees, agents, consultants, and subcontractors of each and any of them from and against all claims, costs, losses, and damages (including but not limited to all fees and charges of engineers, architects, attorneys, and other professionals and all court or arbitration or other dispute resolution costs) arising out of or relating to a Hazardous Environmental Condition created by Contractor or by anyone for whom Contractor is responsible. Nothing in this Paragraph 4.06.H shall obligate Contractor to indemnify any individual or entity from and against the consequences of that individual's or entity's own negligence.

I. The provisions of Paragraphs 4.02, 4.03, and 4.04 do not apply to a Hazardous Environmental Condition uncovered or revealed at the Site.

ARTICLE 5 – BONDS AND INSURANCE

5.01 *Performance, Payment, and Other Bonds*

A. Contractor shall furnish performance and payment bonds, each in an amount at least equal to the Contract Price as security for the faithful performance and payment of all of Contractor's obligations under the Contract Documents. These bonds shall remain in effect until one year

after the date when final payment becomes due or until completion of the correction period specified in Paragraph 13.07, whichever is later, except as provided otherwise by Laws or Regulations or by the Contract Documents. Contractor shall also furnish such other bonds as are required by the Contract Documents.

B. All bonds shall be in the form prescribed by the Contract Documents except as provided otherwise by Laws or Regulations, and shall be executed by such sureties as are named in the list of "Companies Holding Certificates of Authority as Acceptable Sureties on Federal Bonds and as Acceptable Reinsuring Companies" as published in Circular 570 (amended) by the Financial Management Service, Surety Bond Branch, U.S. Department of the Treasury. All bonds signed by an agent or attorney-in-fact must be accompanied by a certified copy of that individual's authority to bind the surety. The evidence of authority shall show that it is effective on the date the agent or attorney-in-fact signed each bond.

C. If the surety on any bond furnished by Contractor is declared bankrupt or becomes insolvent or its right to do business is terminated in any state where any part of the Project is located or it ceases to meet the requirements of Paragraph 5.01.B, Contractor shall promptly notify Owner and Engineer and shall, within 20 days after the event giving rise to such notification, provide another bond and surety, both of which shall comply with the requirements of Paragraphs 5.01.B and 5.02.

5.02 *Licensed Sureties and Insurers*

A. All bonds and insurance required by the Contract Documents to be purchased and maintained by Owner or Contractor shall be obtained from surety or insurance companies that are duly licensed or authorized in the jurisdiction in which the Project is located to issue bonds or insurance policies for the limits and coverages so required. Such surety and insurance companies shall also meet such additional requirements and qualifications as may be provided in the Supplementary Conditions.

5.03 *Certificates of Insurance*

A. Contractor shall deliver to Owner, with copies to each additional insured and loss payee identified in the Supplementary Conditions, certificates of insurance (and other evidence of insurance requested by Owner or any other additional insured) which Contractor is required to purchase and maintain.

B. Intentionally omitted.

C. Failure of Owner to demand such certificates or other evidence of Contractor's full compliance with these insurance requirements or failure of Owner to identify a deficiency in compliance from the evidence provided shall not be construed as a waiver of Contractor's obligation to maintain such insurance.

D. Owner does not represent that insurance coverage and limits established in this Contract necessarily will be adequate to protect Contractor.

E. The insurance and insurance limits required herein shall not be deemed as a limitation on Contractor's liability under the indemnities granted to Owner in the Contract Documents.

5.04 *Contractor's Insurance*

A. Contractor shall purchase and maintain such insurance as is required under the County's General Terms and also as is appropriate for the Work being performed and as will provide protection from claims set forth below which may arise out of or result from Contractor's performance of the Work and Contractor's other obligations under the Contract Documents, whether it is to be performed by Contractor, any Subcontractor or Supplier, or by anyone directly or indirectly employed by any of them to perform any of the Work, or by anyone for whose acts any of them may be liable:

1. claims under workers' compensation, disability benefits, and other similar employee benefit acts;

2. claims for damages because of bodily injury, occupational sickness or disease, or death of Contractor's employees;

3. claims for damages because of bodily injury, sickness or disease, or death of any person other than Contractor's employees;

4. claims for damages insured by reasonably available personal injury liability coverage which are sustained:

   a. by any person as a result of an offense directly or indirectly related to the employment of such person by Contractor, or

   b. by any other person for any other reason;

5. claims for damages, other than to the Work itself, because of injury to or destruction of tangible property wherever located, including loss of use resulting therefrom; and

6. claims for damages because of bodily injury or death of any person or property damage arising out of the ownership, maintenance or use of any motor vehicle.

B. The policies of insurance required by this Paragraph 5.04 shall:

1. with respect to insurance required by Paragraphs 5.04.A.3 through 5.04.A.6 inclusive, be written on an occurrence basis, include as additional insureds (subject to any customary exclusion regarding professional liability) Owner and Engineer, and any other individuals or entities identified in the Supplementary Conditions, all of whom shall be listed as additional insureds, and include coverage for the respective officers, directors, members, partners, employees, agents, consultants, and subcontractors of each and any of all such additional insureds, and the insurance afforded to these additional insureds shall provide primary coverage for all claims covered thereby;

2. include at least the specific coverages and be written for not less than the limits of liability provided in the County's General Terms, Supplementary Conditions or required by Laws or Regulations, whichever is greatest;

3. include contractual liability insurance covering Contractor's indemnity obligations under Paragraphs 6.11 and 6.20;

4. contain a provision or endorsement that the coverage afforded will not be canceled, materially changed or renewal refused until at least 30 days prior written notice has been given to Owner and Contractor and to each other additional insured identified in the Supplementary Conditions to whom a certificate of insurance has been issued (and the certificates of insurance furnished by the Contractor pursuant to Paragraph 5.03 will so provide);

5. remain in effect at least until final payment and at all times thereafter when Contractor may be correcting, removing, or replacing defective Work in accordance with Paragraph 13.07; and

6. include completed operations coverage:

   a. Such insurance shall remain in effect for two years after final payment.

   b. Contractor shall furnish Owner and each other additional insured identified in the Supplementary Conditions, to whom a certificate of insurance has been issued, evidence satisfactory to Owner and any such additional insured of continuation of such insurance at final payment and one year thereafter.

C. The limits of liability for the insurance required by Paragraph 5.04 of the General Conditions shall provide the following coverages for not less that the following amounts or greater where required by Laws and Regulations:

1. 5.04.A.1 and 5.04.A.2. Workers' Compensation, etc. under Paragraphs 5.04.A.1 and 5.04.A.2 of the General Conditions:

   a. State: Statutory

   b. Applicable Federal (e.g. Longshoreman's): Statutory

   c. Employer's Liability: $1,000,000

2. 5.04.A.3, 5.04.A.4 & 5.04.A.5 CONTRACTOR's Liability Insurance under Paragraphs 5.04.A.3 through 5.04.A.5 of the General Conditions which shall also include completed operations and product liability coverages and eliminate the exclusion with respect to property under the care, custody and control of CONTRACTOR:

   a. General Aggregate (Except Products-Completed Operations): $1,000,000

   b. Products-Completed Operations Aggregate: $1,000,000

   c. Personal and Advertising Injury (Per Person/Organization): $1,000,000

   d. Each Occurrence (Bodily Injury and Property Damage): $1,000,000

   e. Property Damage liability insurance will provide Explosion, Collapse and Underground Coverages where applicable.

f. Excess Liability -

1) General Aggregate: $1,000,000

2) Each Occurrence: $1,000,000

3. 5.04.A.6 Automobile Liability:

a. Bodily Injury: $500,000 Each Person; $1,000,000 Each Accident

b. Property Damage: $1,000,000 Each Accident

4. 5.04.B.4 The Contractual Liability coverage required by Paragraph 5.04 shall provide coverage for not less than the following amounts:

a. General Aggregate: $2,000,000

b. Each Occurrence (Bodily Injury and Property Damage): $2,000,000

5.05 *Owner's Liability Insurance*

A. In addition to the insurance required to be provided by Contractor under Paragraph 5.04, Owner, at Owner's option, may purchase and maintain at Owner's expense Owner's own liability insurance as will protect Owner against claims which may arise from operations under the Contract Documents.

5.06 *Property Insurance*

A. Unless otherwise provided in the Supplementary Conditions, Contractor shall purchase and maintain property insurance upon the Work at the Site in the amount of the full replacement cost thereof (subject to such deductible amounts as may be provided in the Supplementary Conditions or required by Laws and Regulations). This insurance shall:

1. include the interests of Owner, Contractor, Subcontractors, and Engineer, and any other individuals or entities identified in the Supplementary Conditions, and the officers, directors, members, partners, employees, agents, consultants, and subcontractors of each and any of them, each of whom is deemed to have an insurable interest and shall be listed as a loss payee;

2. be written on a Builder's Risk "all-risk" policy form that shall at least include insurance for physical loss or damage to the Work, temporary buildings, falsework, and materials and equipment in transit, and shall insure against at least the following perils or causes of loss: fire, lightning, extended coverage, theft, vandalism and malicious mischief, earthquake, collapse, debris removal, demolition occasioned by enforcement of Laws and Regulations, water damage (other than that caused by flood), and such other perils or causes of loss as may be specifically required by the Supplementary Conditions.

3. include expenses incurred in the repair or replacement of any insured property (including but not limited to fees and charges of engineers and architects);

4. cover materials and equipment stored at the Site or at another location that was agreed to in writing by Owner prior to being incorporated in the Work, provided that such materials and equipment have been included in an Application for Payment recommended by Engineer;

5. allow for partial utilization of the Work by Owner;

6. include testing and startup; and

7. be maintained in effect until final payment is made unless otherwise agreed to in writing by Owner, Contractor, and Engineer with 30 days written notice to each other loss payee to whom a certificate of insurance has been issued.

B. Contractor shall purchase and maintain such equipment breakdown insurance or additional property insurance as may be required by the Supplementary Conditions or Laws and Regulations which will include the interests of Owner, Contractor, Subcontractors, and Engineer, and any other individuals or entities identified in the Supplementary Conditions, and the officers, directors, members, partners, employees, agents, consultants and subcontractors of each and any of them, each of whom is deemed to have an insurable interest and shall be listed as a loss payee.

C. All the policies of insurance (and the certificates or other evidence thereof) required to be purchased and maintained in accordance with this Paragraph 5.06 will contain a provision or endorsement that the coverage afforded will not be canceled or materially changed or renewal refused until at least 30 days prior written notice has been given to Owner and Contractor and to each other loss payee to whom a certificate of insurance has been issued and will contain waiver provisions in accordance with Paragraph 5.07.

D. Owner shall not be responsible for purchasing and maintaining any property insurance specified in this Paragraph 5.06 to protect the interests of Contractor, Subcontractors, or others in the Work to the extent of any deductible amounts that are identified in the Supplementary Conditions. The risk of loss within such identified deductible amount will be borne by Contractor, Subcontractors, or others suffering any such loss, and if any of them wishes property insurance coverage within the limits of such amounts, each may purchase and maintain it at the purchaser's own expense.

5.07 *Waiver of Rights*

A. Owner and Contractor intend that all policies purchased in accordance with Paragraph 5.06 will protect Owner, Contractor, Subcontractors, and Engineer, and all other individuals or entities identified in the Supplementary Conditions as loss payees (and the officers, directors, members, partners, employees, agents, consultants, and subcontractors of each and any of them) in such policies and will provide primary coverage for all losses and damages caused by the perils or causes of loss covered thereby. All such policies shall contain provisions to the effect that in the event of payment of any loss or damage the insurers will have no rights of recovery against any of the insureds or loss payees thereunder. Only to the extent permitted under such policies, Owner and Contractor waive all rights against each other and their respective officers, directors, members, partners, employees, agents, consultants and subcontractors of each and any of them for all losses and damages caused by, arising out of or resulting from any of the perils or causes of loss covered by such policies and any other

property insurance applicable to the Work; and, in addition, waive all such rights against Subcontractors and Engineer, and all other individuals or entities identified in the Supplementary Conditions as loss payees (and the officers, directors, members, partners, employees, agents, consultants, and subcontractors of each and any of them) under such policies for losses and damages so caused. None of the above waivers shall extend to the rights that any party making such waiver may have to the proceeds of insurance held by Owner as trustee or otherwise payable under any policy so issued. Notwithstanding the foregoing, any waiver shall not apply if it violates the provisions of any policy or would eliminate or limit recovery for any loss.

B. Intentionally omitted.

C. Intentionally omitted.

5.08 *Receipt and Application of Insurance Proceeds*

A. Any insured loss under the policies of insurance required by Paragraph 5.06 will be adjusted with Owner and made payable to Owner as fiduciary for the loss payees, as their interests may appear, subject to the requirements of any applicable mortgage clause and of Paragraph 5.08.B. Owner shall deposit in a separate account any money so received and shall distribute it in accordance with such agreement as the parties in interest may reach. If no other special agreement is reached, the damaged Work shall be repaired or replaced, the moneys so received applied on account thereof, and the Work and the cost thereof covered by an appropriate Change Order.

B. Owner as fiduciary shall have power to adjust and settle any loss with the insurers unless one of the parties in interest shall object in writing within 15 days after the occurrence of loss to Owner's exercise of this power. If such objection be made, Owner as fiduciary shall make settlement with the insurers in accordance with such agreement as the parties in interest may reach. If no such agreement among the parties in interest is reached, Owner as fiduciary shall adjust and settle the loss with the insurers and, if required in writing by any party in interest, Owner as fiduciary shall give bond for the proper performance of such duties.

5.09 *Acceptance of Bonds and Insurance; Option to Replace*

A. If OWNER has any objection to the coverage afforded by or other provisions of the Bonds or insurance required to be purchased and maintained by the CONTRACTOR in accordance with Article 5 on the basis of non-conformance with the Contract Documents, OWNER shall so notify CONTRACTOR in writing within 10 days after receipt of the certificates (or other evidence requested) required by paragraph 2.01.B. CONTRACTOR shall provide to OWNER such additional information in respect of insurance provided as OWNER may reasonably request. If CONTRACTOR does not purchase or maintain all of the Bonds and Insurance required by the Contract Documents, CONTRACTOR shall notify OWNER in writing of such failure to purchase prior to the start of the Work, or of such failure to maintain prior to any change in the required coverage. Without prejudice to any other right or remedy, OWNER may elect to obtain equivalent Bonds or insurance to protect OWNER's interests at the expense of CONTRACTOR, and a Change Order shall be issued to adjust the Contract Price accordingly.

5.10 *Partial Utilization, Acknowledgment of Property Insurer*

A. If Owner finds it necessary to occupy or use a portion or portions of the Work prior to Substantial Completion of all the Work as provided in Paragraph 14.05, no such use or occupancy shall commence before the insurers providing the property insurance pursuant to Paragraph 5.06 have acknowledged notice thereof and in writing effected any changes in coverage necessitated thereby. The insurers providing the property insurance shall consent by endorsement on the policy or policies, but the property insurance shall not be canceled or permitted to lapse on account of any such partial use or occupancy.

ARTICLE 6 – CONTRACTOR'S RESPONSIBILITIES

6.01 *Supervision and Superintendence*

A. Contractor shall supervise, inspect, and direct the Work competently and efficiently, devoting such attention thereto and applying such skills and expertise as may be necessary to perform the Work in accordance with the Contract Documents. Contractor shall be solely responsible for the means, methods, techniques, sequences, and procedures of construction. Contractor shall not be responsible for the negligence of Owner or Engineer in the design or specification of a specific means, method, technique, sequence, or procedure of construction which is shown or indicated in and expressly required by the Contract Documents.

B. At all times during the progress of the Work, Contractor shall assign a competent resident superintendent who shall not be replaced without written notice to Owner and Engineer except under extraordinary circumstances.

1. At the OWNER's or ENGINEER's request, CONTRACTOR shall provide a summary of the superintendent's relevant experience with current references and their contact information.

6.02 *Labor; Working Hours*

A. Contractor shall provide competent, suitably qualified personnel to survey and lay out the Work and perform construction as required by the Contract Documents. Contractor shall at all times maintain good discipline and order at the Site.

B. Except as otherwise required for the safety or protection of persons or the Work or property at the Site or adjacent thereto, and except as otherwise stated in the Contract Documents, all Work at the Site shall be performed during regular working hours. Contractor will not permit the performance of Work on a Saturday, Sunday, or any legal holiday without Owner's written consent (which will not be unreasonably withheld) given after prior written notice to Engineer and Owner.

6.03 *Services, Materials, and Equipment*

A. Unless otherwise specified in the Contract Documents, Contractor shall provide and assume full responsibility for all services, materials, equipment, labor, transportation, construction equipment and machinery, tools, appliances, fuel, power, light, heat, telephone, water, sanitary facilities, temporary facilities, and all other facilities and incidentals necessary for the performance, testing, start-up, and completion of the Work.

B. All materials and equipment incorporated into the Work shall be as specified or, if not specified, shall be of good quality and new, except as otherwise provided in the Contract Documents. All special warranties and guarantees required by the Specifications shall expressly run to the benefit of Owner. If required by Owner or Engineer, Contractor shall furnish satisfactory evidence (including reports of required tests) as to the source, kind, and quality of materials and equipment.

C. All materials and equipment shall be stored, applied, installed, connected, erected, protected, used, cleaned, and conditioned in accordance with instructions of the applicable Supplier, except as otherwise may be provided in the Contract Documents.

6.04 *Progress Schedule*

A. Contractor shall adhere to the Progress Schedule established in accordance with Paragraph 2.07 as it may be adjusted from time to time as provided below.

1. Contractor shall submit to Owner for acceptance, and Engineer for acceptance (to the extent indicated in Paragraph 2.07), proposed adjustments in the Progress Schedule that will not result in changing the Contract Times. Such adjustments will comply with any provisions of the General Requirements applicable thereto.

2. Proposed adjustments in the Progress Schedule that will change the Contract Times shall be submitted in accordance with the requirements of Article 12. Adjustments in Contract Times may only be made by a Change Order signed by the Owner.

6.05 *Substitutes and "Or-Equals"*

A. Whenever an item of material or equipment is specified or described in the Contract Documents by using the name of a proprietary item or the name of a particular Supplier, the specification or description is intended to establish the type, function, appearance, and quality required. Unless the specification or description contains or is followed by words reading that no like, equivalent, or "or-equal" item or no substitution is permitted, other items of material or equipment or material or equipment of other Suppliers may be submitted to Engineer and Owner for review under the circumstances described below.

1. *"Or-Equal" Items:* If in Owner's sole discretion an item of material or equipment proposed by Contractor is functionally equal to that named and sufficiently similar so that no change in related Work will be required, it may be considered by Owner as an "or-equal" item, in which case review and approval of the proposed item may, in Owner's sole discretion, be accomplished without compliance with some or all of the requirements for approval of proposed substitute items. For the purposes of this Paragraph 6.05.A.1, a proposed item of material or equipment will be considered functionally equal to an item so named if:

a. in the exercise of reasonable judgment Owner, which the assistance of Engineer when requested, determines that:

1) it is at least equal in materials of construction, quality, durability, appearance, strength, and design characteristics;

2) it will reliably perform at least equally well the function and achieve the results imposed by the design concept of the completed Project as a functioning whole; and

3) it has a proven record of performance and availability of responsive service.

b. Contractor certifies that, if approved and incorporated into the Work:

1) there will be no increase in cost to the Owner or increase in Contract Times; and

2) it will conform substantially to the detailed requirements of the item named in the Contract Documents.

2. *Substitute Items:*

a. If in Owner's sole discretion an item of material or equipment proposed by Contractor does not qualify as an "or-equal" item under Paragraph 6.05.A.1, it will be considered a proposed substitute item.

b. Contractor shall submit sufficient information as provided below to allow Owner to determine if the item of material or equipment proposed is essentially equivalent to that named and an acceptable substitute therefor. Requests for review of proposed substitute items of material or equipment will not be accepted by Owner from anyone other than Contractor.

c. Owner may request Engineers review and the requirements for review by Engineer will be as set forth in Paragraph 6.05.A.2.d, as supplemented by the General Requirements, and as Engineer may decide is appropriate under the circumstances.

d. Contractor shall make written application to Owner and Engineer for review of a proposed substitute item of material or equipment that Contractor seeks to furnish or use. The application:

1) shall certify that the proposed substitute item will:

a) perform adequately the functions and achieve the results called for by the general design,

b) be similar in substance to that specified, and

c) be suited to the same use as that specified;

2) will state:

a) the extent, if any, to which the use of the proposed substitute item will prejudice Contractor's achievement of Substantial Completion on time,

b) whether use of the proposed substitute item in the Work will require a change in any of the Contract Documents (or in the provisions of any other direct contract with Owner for other work on the Project) to adapt the design to the proposed substitute item, and

c) whether incorporation or use of the proposed substitute item in connection with the Work is subject to payment of any license fee or royalty;

3) will identify:

a) all variations of the proposed substitute item from that specified, and

b) available engineering, sales, maintenance, repair, and replacement services; and

4) shall contain an itemized estimate of all costs or credits that will result directly or indirectly from use of such substitute item, including costs of redesign and claims of other contractors affected by any resulting change.

B. *Substitute Construction Methods or Procedures:* If a specific means, method, technique, sequence, or procedure of construction is expressly required by the Contract Documents, Contractor may furnish or utilize a substitute means, method, technique, sequence, or procedure of construction approved by Owner in Owner's sole discretion. Contractor shall submit sufficient information to allow Owner, in Owner's sole discretion, to determine that the substitute proposed is equivalent to that expressly called for by the Contract Documents. Owner may request Engineer's review and the requirements for review by Engineer will be similar to those provided in Paragraph 6.05.A.2.

C. *Engineer's Evaluation:* Owner and Engineer will be allowed a reasonable time within which to evaluate each proposal or submittal made pursuant to Paragraphs 6.05.A and 6.05.B. Owner or Engineer may require Contractor to furnish additional data about the proposed substitute item. Owner will be the sole judge of acceptability. No "or equal" or substitute will be ordered, installed or utilized until Owner's review is complete, which will be evidenced by a Change Order in the case of a substitute and an approved Shop Drawing for an "or equal." Owner will advise Contractor in writing of any negative determination.

D. *Special Guarantee:* Owner may require Contractor to furnish at Contractor's expense a special performance guarantee or other surety with respect to any substitute.

E. *Engineer's Cost Reimbursement*: Engineer will record Engineer's costs in evaluating a substitute proposed or submitted by Contractor pursuant to Paragraphs 6.05.A.2 and 6.05.B. Whether or not Engineer approves a substitute so proposed or submitted by Contractor, Contractor shall reimburse Owner for the reasonable charges of Engineer for evaluating each such proposed substitute. Contractor shall also reimburse Owner for the reasonable charges of Engineer for making changes in the Contract Documents (or in the provisions of any other direct contract with Owner) resulting from the acceptance of each proposed substitute.

F. *Contractor's Expense*: Contractor shall provide all data in support of any proposed substitute or "or-equal" at Contractor's expense.

6.06 *Concerning Subcontractors, Suppliers, and Others*

A. Contractor shall not employ any Subcontractor, Supplier, or other individual or entity (including those acceptable to Owner as indicated in Paragraph 6.06.B), whether initially or as a replacement, against whom Owner may have reasonable objection. Contractor shall not be

required to employ any Subcontractor, Supplier, or other individual or entity to furnish or perform any of the Work against whom Contractor has reasonable objection.

B. If the Supplementary Conditions require the identity of certain Subcontractors, Suppliers, or other individuals or entities to be submitted to Owner in advance for acceptance by Owner by a specified date prior to the Effective Date of the Agreement, and if Contractor has submitted a list thereof in accordance with the Supplementary Conditions, Owner's acceptance (either in writing or by failing to make written objection thereto by the date indicated for acceptance or objection in the Bidding Documents or the Contract Documents) of any such Subcontractor, Supplier, or other individual or entity so identified may be revoked on the basis of reasonable objection after due investigation. Contractor shall submit an acceptable replacement for the rejected Subcontractor, Supplier, or other individual or entity, and the Contract Price will be adjusted by the difference in the cost occasioned by such replacement, and an appropriate Change Order will be issued. No acceptance by Owner of any such Subcontractor, Supplier, or other individual or entity, whether initially or as a replacement, shall constitute a waiver of any right of Owner or Engineer to reject defective Work. A list of Subcontractors, Suppliers, or other individuals or entities shall be required as indicated in the Bid Form or the Agreement.

C. Contractor shall be fully responsible to Owner and Engineer for all acts and omissions of the Subcontractors, Suppliers, and other individuals or entities performing or furnishing any of the Work just as Contractor is responsible for Contractor's own acts and omissions. Nothing in the Contract Documents:

1. shall create for the benefit of any such Subcontractor, Supplier, or other individual or entity any contractual relationship between Owner or Engineer and any such Subcontractor, Supplier or other individual or entity; nor

2. shall create any obligation on the part of Owner or Engineer to pay or to see to the payment of any moneys due any such Subcontractor, Supplier, or other individual or entity except as may otherwise be required by Laws and Regulations.

D. Contractor shall be solely responsible for scheduling and coordinating the Work of Subcontractors, Suppliers, and other individuals or entities performing or furnishing any of the Work under a direct or indirect contract with Contractor.

E. Contractor shall require all Subcontractors, Suppliers, and such other individuals or entities performing or furnishing any of the Work to communicate with Engineer through Contractor.

F. The divisions and sections of the Specifications and the identifications of any Drawings shall not control Contractor in dividing the Work among Subcontractors or Suppliers or delineating the Work to be performed by any specific trade.

G. All Work performed for Contractor by a Subcontractor or Supplier will be pursuant to an appropriate agreement between Contractor and the Subcontractor or Supplier which specifically binds the Subcontractor or Supplier to the applicable terms and conditions of the Contract Documents for the benefit of Owner and Engineer. Whenever any such agreement is with a Subcontractor or Supplier who is listed as a loss payee on the property insurance provided in Paragraph 5.06, the agreement between the Contractor and the Subcontractor or

Supplier will contain provisions whereby the Subcontractor or Supplier waives all rights against Owner, Contractor, Engineer, and all other individuals or entities identified in the Supplementary Conditions to be listed as insureds or loss payees (and the officers, directors, members, partners, employees, agents, consultants, and subcontractors of each and any of them) for all losses and damages caused by, arising out of, relating to, or resulting from any of the perils or causes of loss covered by such policies and any other property insurance applicable to the Work. If the insurers on any such policies require separate waiver forms to be signed by any Subcontractor or Supplier, Contractor will obtain the same.

6.07 *Patent Fees and Royalties*

A. Contractor shall pay all license fees and royalties and assume all costs incident to the use in the performance of the Work or the incorporation in the Work of any invention, design, process, product, or device which is the subject of patent rights or copyrights held by others. If a particular invention, design, process, product, or device is specified in the Contract Documents for use in the performance of the Work and if, to the actual knowledge of Owner or Engineer, its use is subject to patent rights or copyrights calling for the payment of any license fee or royalty to others, the existence of such rights shall be disclosed by Owner in the Contract Documents.

B. Intentionally omitted.

C. To the fullest extent permitted by Laws and Regulations, Contractor shall indemnify and hold harmless Owner and Engineer, and the officers, directors, members, partners, employees, agents, consultants and subcontractors of each and any of them from and against all claims, costs, losses, and damages (including but not limited to all fees and charges of engineers, architects, attorneys, and other professionals and all court or arbitration or other dispute resolution costs) arising out of or relating to any infringement of patent rights or copyrights incident to the use in the performance of the Work or resulting from the incorporation in the Work of any invention, design, process, product, or device not specified in the Contract Documents.

6.08 *Permits*

A. Unless otherwise provided in the Supplementary Conditions, Contractor shall obtain and pay for all construction permits, licenses, bonds, and other costs associated with construction permitting agency requirements. Owner shall assist Contractor, when necessary, in obtaining such permits and licenses. Contractor shall pay all governmental charges and inspection fees necessary for the prosecution of the Work which are applicable at the time of opening of Bids, or, if there are no Bids, on the Effective Date of the Agreement.

1. Unless otherwise indicated in the Contract Documents, CONTRACTOR shall pay all charges of utility owners for the establishment of new accounts and physical service connections, and for initiation of utility services. OWNER shall assume such accounts upon Substantial Completion, but CONTRACTOR shall be responsible for fees and usage charges up to and including the date of Substantial Completion, whether or not they are billed by the utility prior to the date of Substantial Completion.

6.09 *Laws and Regulations*

A. Contractor shall give all notices required by and shall comply with all Laws and Regulations applicable to the performance of the Work. Except where otherwise expressly required by applicable Laws and Regulations, neither Owner nor Engineer shall be responsible for monitoring Contractor's compliance with any Laws or Regulations.

B. If Contractor performs any Work in violation of, or knowing or having reason to know that it is contrary to, any Laws or Regulations, Contractor shall bear all claims, costs, losses, and damages (including but not limited to all fees and charges of engineers, architects, attorneys, and other professionals and all court or arbitration or other dispute resolution costs) arising out of or relating to such Work. However, it shall not be Contractor's responsibility to make certain that the Specifications and Drawings are in accordance with Laws and Regulations, but this shall not relieve Contractor of Contractor's obligations under Paragraph 3.03.

C. Changes in Laws or Regulations not known at the time of opening of Bids (or, on the Effective Date of the Agreement if there were no Bids) having an effect on the cost or time of performance of the Work shall be the subject of an adjustment in Contract Price or Contract Times, but only if acceptable to Owner in Owner's sole discretion. If Owner and Contractor are unable to agree on entitlement to or on the amount or extent, if any, of any such adjustment, a Claim may be made therefor as provided in Paragraph 10.05.

6.10 *Taxes*

A. Contractor shall pay all sales, consumer, use, and other similar taxes required to be paid by Contractor in accordance with the Laws and Regulations of the place of the Project which are applicable during the performance of the Work. Owner is a tax-exempt political subdivision of the Commonwealth of Virginia.

B. Said taxes shall not be in addition to the contract price between the OWNER and the CONTRACTOR, as the taxes shall be an obligation of the CONTRACTOR and not of the OWNER, and the OWNER shall be held harmless for same by the CONTRACTOR.

C. Pollution control facilities qualify for exemption from sales and use tax in accordance with Section 58.1-609.3 of the Code of Virginia. If this Project qualifies as pollution control facilities, the Work will be certified to the Virginia Department of Taxation as an approved pollution control facility by the Department of Environmental Quality. CONTRACTOR shall request from the Virginia Department of Taxation the applicable sales and use tax exemption certificate.

6.11 *Use of Site and Other Areas*

A. *Limitation on Use of Site and Other Areas:*

1. Contractor shall confine construction equipment, the storage of materials and equipment, and the operations of workers to the Site and other areas permitted by Laws and Regulations, and shall not unreasonably encumber the Site and other areas with construction equipment or other materials or equipment. Contractor shall assume full responsibility for any damage to any such land or area, or to the owner or occupant thereof, or of any adjacent land or areas resulting from the performance of the Work.

2. Should any claim be made by any such owner or occupant because of the performance of the Work, Contractor shall promptly settle with such other party by negotiation or otherwise resolve the claim by arbitration or other dispute resolution proceeding or at law.

3. To the fullest extent permitted by Laws and Regulations, Contractor shall indemnify and hold harmless Owner and Engineer, and the officers, directors, members, partners, employees, agents, consultants and subcontractors of each and any of them from and against all claims, costs, losses, and damages (including but not limited to all fees and charges of engineers, architects, attorneys, and other professionals and all court or arbitration or other dispute resolution costs) arising out of or relating to any claim or action, legal or equitable, brought by any such owner or occupant against Owner, Engineer, or any other party indemnified hereunder to the extent caused by or based upon Contractor's performance of the Work.

B. *Removal of Debris During Performance of the Work:* During the progress of the Work Contractor shall keep the Site and other areas free from accumulations of waste materials, rubbish, and other debris. Removal and disposal of such waste materials, rubbish, and other debris shall conform to applicable Laws and Regulations.

C. *Cleaning:* Prior to Substantial Completion of the Work Contractor shall clean the Site and the Work and make it ready for utilization by Owner. At the completion of the Work Contractor shall remove from the Site all tools, appliances, construction equipment and machinery, and surplus materials and shall restore to original condition all property not designated for alteration by the Contract Documents.

D. *Loading Structures:* Contractor shall not load nor permit any part of any structure to be loaded in any manner that will endanger the structure, nor shall Contractor subject any part of the Work or adjacent property to stresses or pressures that will endanger it.

6.12 *Record Documents*

A. Contractor shall maintain in a safe place at the Site one record copy of all Drawings, Specifications, Addenda, Change Orders, Work Change Directives, Field Orders, and written interpretations and clarifications in good order and annotated to show changes made during construction. These record documents together with all approved Samples and a counterpart of all approved Shop Drawings will be available to Engineer for reference. Upon completion of the Work, these record documents, Samples, and Shop Drawings will be delivered to Engineer and Owner.

6.13 *Safety and Protection*

A. Contractor shall be solely responsible for initiating, maintaining and supervising all safety precautions and programs in connection with the Work. Such responsibility does not relieve Subcontractors of their responsibility for the safety of persons or property in the performance of their work, nor for compliance with applicable safety Laws and Regulations. Contractor shall take all necessary precautions for the safety of, and shall provide the necessary protection to prevent damage, injury or loss to:

1. all persons on the Site or who may be affected by the Work;

2. all the Work and materials and equipment to be incorporated therein, whether in storage on or off the Site; and

3. other property at the Site or adjacent thereto, including trees, shrubs, lawns, walks, pavements, roadways, structures, utilities, and Underground Facilities not designated for removal, relocation, or replacement in the course of construction.

B. Contractor shall comply with all applicable Laws and Regulations relating to the safety of persons or property, or to the protection of persons or property from damage, injury, or loss; and shall erect and maintain all necessary safeguards for such safety and protection. Contractor shall notify owners of adjacent property and of Underground Facilities and other utility owners when prosecution of the Work may affect them, and shall cooperate with them in the protection, removal, relocation, and replacement of their property.

C. Contractor shall comply with the applicable requirements of Owner's safety programs, if any. The Supplementary Conditions identify any Owner's safety programs that are applicable to the Work.

D. Contractor shall inform Owner and Engineer of the specific requirements of Contractor's safety program with which Owner's and Engineer's employees and representatives must comply while at the Site.

E. All damage, injury, or loss to any property referred to in Paragraph 6.13.A.2 or 6.13.A.3 caused, directly or indirectly, in whole or in part, by Contractor, any Subcontractor, Supplier, or any other individual or entity directly or indirectly employed by any of them to perform any of the Work, or anyone for whose acts any of them may be liable, shall be remedied by Contractor (except damage or loss directly and solely attributable to the fault of Drawings or Specifications or to the willful misconduct of Owner or Engineer or anyone employed by any of them, or anyone for whose acts any of them may be liable, and not attributable, directly or indirectly, in whole or in part, to the fault or negligence of Contractor or any Subcontractor, Supplier, or other individual or entity directly or indirectly employed by any of them).

F. Contractor's duties and responsibilities for safety and for protection of the Work shall continue until such time as all the Work is completed and Engineer has issued a notice to Owner and Contractor in accordance with Paragraph 14.07.B that the Work is acceptable (except as otherwise expressly provided in connection with Substantial Completion).

6.14 *Safety Representative*

A. Contractor shall designate a qualified and experienced safety representative at the Site whose duties and responsibilities shall be the prevention of accidents and the maintaining and supervising of safety precautions and programs.

6.15 *Hazard Communication Programs*

A. Contractor shall be responsible for coordinating any exchange of material safety data sheets or other hazard communication information required to be made available to or exchanged between or among employers at the Site in accordance with Laws or Regulations.

6.16 *Emergencies*

A. In emergencies affecting the safety or protection of persons or the Work or property at the Site or adjacent thereto, Contractor is obligated to act to prevent threatened damage, injury, or loss. Contractor shall give Engineer and Owner prompt written notice if Contractor believes that any significant changes in the Work or variations from the Contract Documents have been caused thereby or are required as a result thereof. If Owner determines that a change in the Contract Documents is required because of the action taken by Contractor in response to such an emergency, a Work Change Directive or Change Order will be issued.

6.17 *Shop Drawings and Samples*

A. Contractor shall submit Shop Drawings and Samples to Engineer for review and approval in accordance with the accepted Schedule of Submittals (as required by Paragraph 2.07). Each submittal will be identified as Engineer may require.

1. *Shop Drawings:*

a. Submit number of copies specified in the General Requirements.

b. Data shown on the Shop Drawings will be complete with respect to quantities, dimensions, specified performance and design criteria, materials, and similar data to show Engineer the services, materials, and equipment Contractor proposes to provide and to enable Engineer and Owner to review the information for the limited purposes required by Paragraph 6.17.D.

2. *Samples:*

a. Submit number of Samples specified in the Specifications.

b. Clearly identify each Sample as to material, Supplier, pertinent data such as catalog numbers, the use for which intended and other data as Engineer or Owner may require to enable Engineer to review the submittal for the limited purposes required by Paragraph 6.17.D.

B. Where a Shop Drawing or Sample is required by the Contract Documents or the Schedule of Submittals, any related Work performed prior to Engineer's and Owner's review and approval of the pertinent submittal will be at the sole expense and responsibility of Contractor.

C. *Submittal Procedures:*

1. Before submitting each Shop Drawing or Sample, Contractor shall have:

a. reviewed and coordinated each Shop Drawing or Sample with other Shop Drawings and Samples and with the requirements of the Work and the Contract Documents;

b. determined and verified all field measurements, quantities, dimensions, specified performance and design criteria, installation requirements, materials, catalog numbers, and similar information with respect thereto;

c. determined and verified the suitability of all materials offered with respect to the indicated application, fabrication, shipping, handling, storage, assembly, and installation pertaining to the performance of the Work; and

d. determined and verified all information relative to Contractor's responsibilities for means, methods, techniques, sequences, and procedures of construction, and safety precautions and programs incident thereto.

2. Each submittal shall bear a stamp or specific written certification that Contractor has satisfied Contractor's obligations under the Contract Documents with respect to Contractor's review and approval of that submittal.

3. With each submittal, Contractor shall give Owner specific written notice of any variations that the Shop Drawing or Sample may have from the requirements of the Contract Documents. This notice shall be both a written communication separate from the Shop Drawings or Sample submittal; and, in addition, by a specific notation made on each Shop Drawing or Sample submitted to Owner for review and approval of each such variation.

D. *Engineer's Review:*

1. Engineer will provide timely review of Shop Drawings and Samples in accordance with the Schedule of Submittals acceptable to Owner. Engineer's review and approval will not bind the Owner and only Owner may determine if the items covered by the submittals will, after installation or incorporation in the Work, conform to the information given in the Contract Documents and be compatible with the design concept of the completed Project as a functioning whole as indicated by the Contract Documents.

2. Engineer's review will not extend to means, methods, techniques, sequences, or procedures of construction (except where a particular means, method, technique, sequence, or procedure of construction is specifically and expressly called for by the Contract Documents) or to safety precautions or programs incident thereto. The review and approval of a separate item as such will not indicate approval of the assembly in which the item functions. Owner may use Engineer's review in coming to any determination of acceptance.

3. Owner's and Engineer's reviews and approvals shall not relieve Contractor from responsibility for any variation from the requirements of the Contract Documents unless Contractor has complied with the requirements of Paragraph 6.17.C.3 and Owner has given written approval of each such variation by specific written notation thereof incorporated in or accompanying the Shop Drawing or Sample. Neither Owner's nor Engineer's review and approval shall relieve Contractor from responsibility for complying with the requirements of Paragraph 6.17.C.1.

E. *Resubmittal Procedures:*

1. Contractor shall make corrections required by Engineer and shall return the required number of corrected copies of Shop Drawings and submit, as required, new Samples for review and approval. Contractor shall direct specific attention in writing to revisions other than the corrections called for by Engineer on previous submittals.

2. Once preliminarily approved by Engineer, all Shop Drawings and Samples must be approved by Owner in writing.

6.18 *Continuing the Work*

A. Contractor shall carry on the Work and adhere to the Progress Schedule during all disputes or disagreements with Owner. No Work shall be delayed or postponed pending resolution of any disputes or disagreements, except as permitted by Paragraph 15.04 or as Owner and Contractor may otherwise agree in writing.

6.19 *Contractor's General Warranty and Guarantee*

A. Contractor warrants and guarantees to Owner that all Work will be completed in a good and workmanlike manner in accordance with the Contract Documents and consistent with industry standards so as to pass without exception in the trade and further all such Work and will be free from defects. Engineer and its officers, directors, members, partners, employees, agents, consultants, and subcontractors shall be entitled to rely on representation of Contractor's warranty and guarantee.

B. Contractor's warranty and guarantee hereunder excludes defects or damage caused by:

1. abuse, modification, or improper maintenance or operation by persons other than Contractor, Subcontractors, Suppliers, or any other individual or entity for whom Contractor is responsible; or

2. normal wear and tear under normal usage.

C. Contractor's obligation to perform and complete the Work in accordance with the Contract Documents shall be absolute. None of the following will constitute an acceptance of Work that is not in accordance with the Contract Documents or a release of Contractor's obligation to perform the Work in accordance with the Contract Documents:

1. observations by Engineer;

2. recommendation by Engineer or payment by Owner of any progress or final payment;

3. the issuance of a certificate of Substantial Completion by Owner or any payment related thereto by Owner;

4. use or occupancy of the Work or any part thereof by Owner;

5. any review and approval of a Shop Drawing or Sample submittal or the issuance of a notice of acceptability by Owner and Engineer;

6. any inspection, test, or approval by others; or

7. any correction of defective Work by Owner.

D. The warranty period on all labor and materials being a part of the Work shall be 36 calendar months from the date of final completion. No warranty period time limit shall apply to Work which was defective at the time of Final Completion, as in the case of latent non-conformities.

6.20 *Indemnification*

A. To the fullest extent permitted by Laws and Regulations, Contractor shall indemnify and hold harmless Owner and Engineer, and the officers, directors, members, partners, employees, agents, consultants and subcontractors of each and any of them from and against all claims, costs, losses, and damages (including but not limited to all fees and charges of engineers, architects, attorneys, and other professionals and all court or arbitration or other dispute resolution costs) arising out of or relating to the performance of the Work, provided that any such claim, cost, loss, or damage is attributable to bodily injury, sickness, disease, or death, or to injury to or destruction of tangible property (other than the Work itself), including the loss of use resulting therefrom but only to the extent caused by any negligent act or omission of Contractor, any Subcontractor, any Supplier, or any individual or entity directly or indirectly employed by any of them to perform any of the Work or anyone for whose acts any of them may be liable .

B. In any and all claims against Owner or Engineer or any of their officers, directors, members, partners, employees, agents, consultants, or subcontractors by any employee (or the survivor or personal representative of such employee) of Contractor, any Subcontractor, any Supplier, or any individual or entity directly or indirectly employed by any of them to perform any of the Work, or anyone for whose acts any of them may be liable, the indemnification obligation under Paragraph 6.20.A shall not be limited in any way by any limitation on the amount or type of damages, compensation, or benefits payable by or for Contractor or any such Subcontractor, Supplier, or other individual or entity under workers' compensation acts, disability benefit acts, or other employee benefit acts.

C. The indemnification obligations of Contractor under Paragraph 6.20.A shall not extend to the liability of Engineer and Engineer's officers, directors, members, partners, employees, agents, consultants and subcontractors arising out of:

1. the preparation or approval of, or the failure to prepare or approve maps, Drawings, opinions, reports, surveys, Change Orders, designs, or Specifications; or

2. giving directions or instructions, or failing to give them, if that is the primary cause of the injury or damage.

6.21 *Delegation of Professional Design Services*

A. Contractor will not be required to provide professional design services unless such services are specifically required by the Contract Documents for a portion of the Work or unless such services are required to carry out Contractor's responsibilities for construction means, methods, techniques, sequences and procedures. Contractor shall not be required to provide professional services in violation of applicable law.

B. If professional design services or certifications by a design professional related to systems, materials or equipment are specifically required of Contractor by the Contract Documents, Owner and Engineer will specify all performance and design criteria that such services must

satisfy. Contractor shall cause such services or certifications to be provided by a properly licensed professional, whose signature and seal shall appear on all drawings, calculations, specifications, certifications, Shop Drawings and other submittals prepared by such professional. Shop Drawings and other submittals related to the Work designed or certified by such professional, if prepared by others, shall bear such professional's written approval when submitted to Engineer.

C. Owner and Engineer shall be entitled to rely upon the adequacy, accuracy and completeness of the services, certifications or approvals performed by such design professionals, provided Owner and Engineer have specified to Contractor all performance and design criteria that such services must satisfy.

D. Pursuant to this Paragraph 6.21, Engineer's review and approval of design calculations and design drawings will be only for the limited purpose of checking for conformance with performance and design criteria given and the design concept expressed in the Contract Documents. Engineer's review and approval of Shop Drawings and other submittals (except design calculations and design drawings) will be only for the purpose stated in Paragraph 6.17.D.1.

E. Contractor shall not be responsible for the adequacy of the performance or design criteria required by the Contract Documents.

ARTICLE 7 – OTHER WORK AT THE SITE

7.01 *Related Work at Site*

A. Owner may perform other work related to the Project at the Site with Owner's employees, or through other direct contracts therefore, or have other work performed by utility owners. If such other work is not noted in the Contract Documents, then:

1. If OWNER considers such other work to be of such a nature as to be likely to cause interference with the CONTRACTOR's performance of the Work, CONTRACTOR shall be notified prior to starting other work. If CONTRACTOR considers any other work proposed to be performed, or work being performed by the OWNER, to be of such a nature as to be likely to cause interference with the CONTRACTOR's performance of the Work, CONTRACTOR shall provide written notice of such. OWNER shall respond to such notice within 7 working days of receipt.

2. If Owner and Contractor are unable to agree on entitlement to or on the amount or extent, if any, of any adjustment in the Contract Price or Contract Times that should be allowed as a result of such other work, a Claim may be made therefore as provided in Paragraph 10.05.

B. Contractor shall afford each other contractor who is a party to such a direct contract, each utility owner, and Owner, if Owner is performing other work with Owner's employees, proper and safe access to the Site, provide a reasonable opportunity for the introduction and storage of materials and equipment and the execution of such other work, and properly coordinate the Work with theirs. Contractor shall do all cutting, fitting, and patching of the Work that may be required to properly connect or otherwise make its several parts come together and properly integrate with such other work. Contractor shall not endanger any work of others by cutting,

excavating, or otherwise altering such work; provided, however, that Contractor may cut or alter others' work with the written consent of Engineer and the others whose work will be affected. The duties and responsibilities of Contractor under this Paragraph are for the benefit of such utility owners and other contractors to the extent that there are comparable provisions for the benefit of Contractor in said direct contracts between Owner and such utility owners and other contractors.

C. If the proper execution or results of any part of Contractor's Work depends upon work performed by others under this Article 7, Contractor shall inspect such other work and promptly report to Engineer in writing any delays, defects, or deficiencies in such other work that render it unavailable or unsuitable for the proper execution and results of Contractor's Work. Contractor's failure to so report will constitute an acceptance of such other work as fit and proper for integration with Contractor's Work except for latent defects and deficiencies in such other work.

7.02 *Coordination*

A. If Owner intends to contract with others for the performance of other work on the Project at the Site, the following will be set forth in Supplementary Conditions:

1. the individual or entity who will have authority and responsibility for coordination of the activities among the various contractors will be identified;

2. the specific matters to be covered by such authority and responsibility will be itemized; and

3. the extent of such authority and responsibilities will be provided.

B. Unless otherwise provided in the Supplementary Conditions, Owner shall have sole authority and responsibility for such coordination.

7.03 *Legal Relationships*

A. Paragraphs 7.01.A and 7.02 are not applicable for utilities not under the control of Owner.

B. Each other direct contract of Owner under Paragraph 7.01.A shall provide that the other contractor is liable to Owner and Contractor for the reasonable direct delay and disruption costs incurred by Contractor as a result of the other contractor's wrongful actions or inactions.

C. Contractor shall be liable to Owner and any other contractor under direct contract to Owner for the reasonable direct delay and disruption costs incurred by such other contractor as a result of Contractor's wrongful action or inactions.

ARTICLE 8 – OWNER'S RESPONSIBILITIES

8.01 *Communications to Contractor*

A. Except as otherwise provided in these General Conditions, Owner may issue communications to Contractor directly or through Engineer.

8.02 *Replacement of Engineer*

A. In case of termination of the employment of Engineer, Owner shall appoint an engineer to whom Contractor makes no reasonable objection, whose status under the Contract Documents shall be that of the former Engineer.

8.03 *Furnish Data*

A. Owner shall promptly furnish the data required of Owner under the Contract Documents.

8.04 *Pay When Due*

A. Owner shall make payments to Contractor when they are due as provided in Paragraphs 14.02.C and 14.07.C.

8.05 *Lands and Easements; Reports and Tests*

A. Owner's duties with respect to providing lands and easements and providing engineering surveys to establish reference points are set forth in Paragraphs 4.01 and 4.05. Paragraph 4.02 refers to Owner's identifying and making available to Contractor copies of reports of explorations and tests of subsurface conditions and drawings of physical conditions relating to existing surface or subsurface structures at the Site.

8.06 *Insurance*

A. Owner's responsibilities, if any, with respect to purchasing and maintaining liability and property insurance are set forth in Article 5.

8.07 *Change Orders*

A. Owner is obligated to execute Change Orders as indicated in Paragraph 10.03.

8.08 *Inspections, Tests, and Approvals*

A. Owner's responsibility with respect to certain inspections, tests, and approvals is set forth in Paragraph 13.03.B.

8.09 *Limitations on Owner's Responsibilities*

A. The Owner shall not supervise, direct, or have control or authority over, nor be responsible for, Contractor's means, methods, techniques, sequences, or procedures of construction, or the safety precautions and programs incident thereto, or for any failure of Contractor to comply with Laws and Regulations applicable to the performance of the Work. Owner will not be responsible for Contractor's failure to perform the Work in accordance with the Contract Documents.

8.10 *Undisclosed Hazardous Environmental Condition*

A. Owner's responsibility in respect to an undisclosed Hazardous Environmental Condition is set forth in Paragraph 4.06.

8.11 *Evidence of Financial Arrangements*

A. Upon request of Contractor, Owner shall furnish Contractor reasonable evidence that financial arrangements have been made to satisfy Owner's obligations under the Contract Documents.

8.12 *Compliance with Safety Program*

A. While at the Site, Owner's employees and representatives shall comply with the specific applicable requirements of Contractor's safety programs of which Owner has been informed pursuant to Paragraph 6.13.D.

ARTICLE 9 – ENGINEER'S STATUS DURING CONSTRUCTION

9.01 *Owner's Representative*

A. The Director of Public Works or the County Administrator shall be Owner's representatives during the construction period. The duties and responsibilities and the limitations of authority of Engineer as Owner's representative during construction are set forth in the Contract Documents.

9.02 *Visits to Site*

A. Engineer and Owner's Representatives will make visits to the Site at intervals appropriate to the various stages of construction as Engineer deems necessary in order to observe as an experienced and qualified design professional the progress that has been made and the quality of the various aspects of Contractor's executed Work. Based on information obtained during such visits and observations, Engineer, for the benefit of Owner, will determine, in general, if the Work is proceeding in accordance with the Contract Documents. Engineer will not be required to make exhaustive or continuous inspections on the Site to check the quality or quantity of the Work. Engineer's efforts will be directed toward providing for Owner a greater degree of confidence that the completed Work will conform generally to the Contract Documents. On the basis of such visits and observations, Engineer will keep Owner informed of the progress of the Work and will endeavor to guard Owner against defective Work.

B. Engineer's visits and observations are subject to all the limitations on Engineer's authority and responsibility set forth in Paragraph 9.09. Particularly, but without limitation, during or as a result of Engineer's visits or observations of Contractor's Work, Engineer will not supervise, direct, control, or have authority over or be responsible for Contractor's means, methods, techniques, sequences, or procedures of construction, or the safety precautions and programs incident thereto, or for any failure of Contractor to comply with Laws and Regulations applicable to the performance of the Work.

9.03 *Project Representative*

A. OWNER will furnish full-time inspection services for extensive observation of the Work. The responsibilities and authority and limitations of the OWNER's inspector shall be as set forth in the Contract Documents for the OWNER.

9.04 *Authorized Variations in Work*

A. Only Owner may authorize a variation in the Work, even minor variations in the Work from the requirements of the Contract Documents which do not involve an adjustment in the Contract Price or the Contract Times and are compatible with the design concept of the completed Project as a functioning whole as indicated by the Contract Documents. These may be accomplished by a Field Order and will be binding on Owner only if signed by the Owner and in such cases Contractor shall perform the Work involved promptly. If Owner or Contractor believes that a Field Order justifies an adjustment in the Contract Price or Contract Times, or both, and the parties are unable to agree on entitlement to or on the amount or extent, if any, of any such adjustment, a Claim may be made therefor as provided in Paragraph 10.05.

9.05 *Rejecting Defective Work*

A. Only Owner will have authority to reject Work which Owner believes to be defective, or that Owner believes will not produce a completed Project that conforms to the Contract Documents or that will prejudice the integrity of the design concept of the completed Project as a functioning whole as indicated by the Contract Documents. Owner or Engineer will also have authority to require special inspection or testing of the Work as provided in Paragraph 13.04, whether or not the Work is fabricated, installed, or completed.

9.06 *Shop Drawings, Change Orders and Payments*

A. In connection with Engineer's authority, and limitations thereof, as to Shop Drawings and Samples, see Paragraph 6.17.

B. In connection with Engineer's authority, and limitations thereof, as to design calculations and design drawings submitted in response to a delegation of professional design services, if any, see Paragraph 6.21.

C. In connection with Engineer's authority as to Change Orders, see Articles 10, 11, and 12.

D. In connection with Engineer's authority as to Applications for Payment, see Article 14.

9.07 *Determinations for Unit Price Work*

A. Owner, with Engineer's guidance which shall not be binding on Owner, will determine the actual quantities and classifications of Unit Price Work performed by Contractor. Engineer will review with Owner the Engineer's preliminary determinations on such matters and render a written decision thereon (by recommendation of an Application for Payment or otherwise) only if requested to do so by the Owner. Owner's written decision thereon will be final and binding, subject to the provisions of Paragraph 10.05.

9.08 *Decisions on Requirements of Contract Documents and Acceptability of Work*

A. Only Owner may interpret requirements of the Contract Documents and judge of the acceptability of the Work thereunder. All matters in question and other matters between Owner and Contractor arising prior to the date final payment is due relating to the acceptability of the Work, and the interpretation of the requirements of the Contract Documents pertaining to the

performance of the Work, will be referred to the Owner and Engineer in writing within 30 days of the event giving rise to the question.

B. Engineer will, with reasonable promptness, render a written decision on the issue referred if so requested to do so by the Owner, but only the Owner's written decision shall control. If Owner or Contractor believes that any such decision entitles them to an adjustment in the Contract Price or Contract Times or both, a Claim may be made under Paragraph 10.05.

C. Owner's written decision on the issue referred will be final and binding on Owner and Contractor, subject to the provisions of Paragraph 10.05.

9.09 *Limitations on Engineer's Authority and Responsibilities*

A. Neither Engineer's authority or responsibility under this Article 9 or under any other provision of the Contract Documents nor any decision made by Engineer in good faith either to exercise or not exercise such authority or responsibility or the undertaking, exercise, or performance of any authority or responsibility by Engineer shall create, impose, or give rise to any duty in contract, tort, or otherwise owed by Engineer to Contractor, any Subcontractor, any Supplier, any other individual or entity, or to any surety for or employee or agent of any of them.

B. Engineer will not supervise, direct, control, or have authority over or be responsible for Contractor's means, methods, techniques, sequences, or procedures of construction, or the safety precautions and programs incident thereto, or for any failure of Contractor to comply with Laws and Regulations applicable to the performance of the Work. Engineer will not be responsible for Contractor's failure to perform the Work in accordance with the Contract Documents.

C. Engineer will not be responsible for the acts or omissions of Contractor or of any Subcontractor, any Supplier, or of any other individual or entity performing any of the Work.

D. Engineer's review of the final Application for Payment and accompanying documentation and all maintenance and operating instructions, schedules, guarantees, bonds, certificates of inspection, tests and approvals, and other documentation required to be delivered by Paragraph 14.07.A will only be to determine generally that their content complies with the requirements of, and in the case of certificates of inspections, tests, and approvals that the results certified indicate compliance with, the Contract Documents; and such review will not be binding on the Owner.

E. The limitations upon authority and responsibility set forth in this Paragraph 9.09 shall also apply to the Resident Project Representative, if any, and assistants, if any.

9.10 *Compliance with Safety Program*

A. While at the Site, Engineer's employees and representatives shall comply with the specific applicable requirements of Contractor's safety programs of which Engineer has been informed pursuant to Paragraph 6.13.D.

ARTICLE 10 – CHANGES IN THE WORK; CLAIMS

10.01 *Authorized Changes in the Work*

A. Without invalidating the Contract and without notice to any surety, Owner may, at any time or from time to time, order additions, deletions, or revisions in the Work by a signed written Change Order, or a Work Change Directive. Upon receipt of any such document, Contractor shall promptly proceed with the Work involved which will be performed under the applicable conditions of the Contract Documents (except as otherwise specifically provided).

B. If Owner and Contractor are unable to agree on entitlement to, or on the amount or extent, if any, of an adjustment in the Contract Price or Contract Times, or both, that should be allowed as a result of a Work Change Directive, a Claim may be made therefor as provided in Paragraph 10.05.

10.02 *Unauthorized Changes in the Work*

A. Contractor shall not be entitled to an increase in the Contract Price or an extension of the Contract Times with respect to any work performed that is not required by the Contract Documents as amended, modified, or supplemented as provided in Paragraph 3.04.

10.03 *Execution of Change Orders*

A. Owner and Contractor may enter into written Change Orders from time to time covering:

1. changes in the Work which are: (i) ordered by Owner pursuant to Paragraph 10.01.A, (ii) required because of acceptance of defective Work under Paragraph 13.08.A or Owner's correction of defective Work under Paragraph 13.09, or (iii) agreed to by the parties;

2. changes in the Contract Price or Contract Times which are agreed to by the parties, including any undisputed sum or amount of time for Work actually performed in accordance with a Work Change Directive; and

3. changes in the Contract Price or Contract Times; provided that, in lieu of executing any such Change Order, a claim may be pursued under 10.05.

10.04 *Notification to Surety*

A. If the provisions of any bond require notice to be given to a surety of any change affecting the general scope of the Work or the provisions of the Contract Documents (including, but not limited to, Contract Price or Contract Times), the giving of any such notice will be Contractor's responsibility. The amount of each applicable bond will be adjusted to reflect the effect of any such change.

10.05 *Claims*

A. *Claim's Act*: If a Claim cannot be resolved under 10.05(B) and (C) below, then the following provisions applies to such Claims. Contractor shall notify Owner in writing of any Claims hereunder consistent with Section 65 of the County's General Terms, except those waived pursuant to Paragraph 14.09. The County shall respond to all Claims, except those waived

pursuant to Paragraph 14.09, if and as required by Section 65 of the County's General Terms. If Owner has a Claim against Contractor hereunder, then the Owner may pursue any rights or remedies it may have under the Contract Documents or by Laws and Regulations in respect of such Claims or law, equity or otherwise.

B. *Notice:* Written notice stating the general nature of each Claim shall be delivered by the claimant to the other party to the Contract. Notice of the amount or extent of the Claim, with supporting data shall be delivered to the other party to the Contract within 60 days after the start of such event. A Claim for an adjustment in Contract Price shall be prepared in accordance with the provisions of Paragraph 12.01.B. A Claim for an adjustment in Contract Times shall be prepared in accordance with the provisions of Paragraph 12.02.B. Each Claim shall be accompanied by claimant's written statement that the adjustment claimed is the entire adjustment to which the claimant believes it is entitled as a result of said event. The opposing party shall submit any response to the claimant within 30 days after receipt of the claimant's last submittal.

C. *The other side will* review each Claim and, within 30 days after receipt of the last submittal of the claimant or the last submittal of the opposing party, if any, take one of the following actions in writing:

1. deny the Claim in whole or in part;

2. approve the Claim; or

3. notify the other party that more information is need to determine approval or denial of the Claim.

D. No Claim by Contractor for an adjustment in Contract Price or Contract Times will be valid if not submitted in accordance with this Paragraph 10.05.

ARTICLE 11 – COST OF THE WORK; ALLOWANCES; UNIT PRICE WORK

11.01 *Cost of the Work*

A. *Costs Included:* The term Cost of the Work means the sum of any and all costs reasonably or necessarily incurred and paid by Contractor in the proper performance of the Work and the parties agree that the full Cost of Work is included in the Contract Price set forth in the Agreement. Notwithstanding any provision of these General Requirements, the total payments made by Owner to Contractor cannot exceed the Contract Price unless the parties execute of a valid written modification, amendment or change order specifically modifying the Contract Price which is signed by the Owner. The costs set forth in Paragraph 11.01.B shall not be charged to the Owner under any circumstances and cannot be factored into the Cost of the Work. The value of any Work covered by a Change Order or when a Claim for an adjustment in Contract Price cannot exceed the Cost of the Work; and the costs to be paid to Contractor will be only those additional or incremental costs required because of the change in the Work or because of the event giving rise to the Claim and further shall only be those costs agreed to by the Owner in writing. In addition, any such costs shall be in amounts no higher than those prevailing in the locality of the Project, shall not include any of the costs itemized in Paragraph 11.01.B, and may include only the following items:

1. Payroll costs for employees in the direct employ of Contractor in the performance of the Work under schedules of job classifications agreed upon by Owner and Contractor. Such employees shall include, without limitation, superintendents, foremen, and other personnel employed full time on the Work. Payroll costs for employees not employed full time on the Work shall be apportioned on the basis of their time spent on the Work. Payroll costs shall include, but not be limited to, salaries and wages plus the cost of fringe benefits, which shall include social security contributions, unemployment, excise, and payroll taxes, workers' compensation, health and retirement benefits, bonuses, sick leave, vacation and holiday pay applicable thereto. The expenses of performing Work outside of regular working hours, on Saturday, Sunday, or legal holidays, shall be included in the above to the extent authorized by Owner.

2. Cost of all materials and equipment furnished and incorporated in the Work, including costs of transportation and storage thereof, and Suppliers' field services required in connection therewith. All cash discounts shall accrue to Contractor unless Owner deposits funds with Contractor with which to make payments, in which case the cash discounts shall accrue to Owner. All trade discounts, rebates and refunds and returns from sale of surplus materials and equipment shall accrue to Owner, and Contractor shall make provisions so that they may be obtained.

3. Payments made by Contractor to Subcontractors for Work performed by Subcontractors. If required by Owner, Contractor shall obtain competitive bids from subcontractors acceptable to Owner and Contractor and shall deliver such bids to Owner, who will then determine, with the advice of Engineer, which bids, if any, will be acceptable. If any subcontract provides that the Subcontractor is to be paid on the basis of Cost of the Work plus a fee, the Subcontractor's Cost of the Work and fee shall be determined in the same manner as Contractor's Cost of the Work and fee as provided in this Paragraph 11.01.

4. Costs of special consultants (including but not limited to engineers, architects, testing laboratories, surveyors, attorneys, and accountants) employed for services specifically related to the Work.

5. Supplemental costs including the following:

    a. The proportion of necessary transportation, travel, and subsistence expenses of Contractor's employees incurred in discharge of duties connected with the Work.

    b. Cost, including transportation and maintenance, of all materials, supplies, equipment, machinery, appliances, office, and temporary facilities at the Site, and hand tools not owned by the workers, which are consumed in the performance of the Work, and cost, less market value, of such items used but not consumed which remain the property of Contractor.

    c. Rentals of all construction equipment and machinery, and the parts thereof whether rented from Contractor or others in accordance with rental agreements approved by Owner with the advice of Engineer, and the costs of transportation, loading, unloading, assembly, dismantling, and removal thereof. All such costs shall be in accordance with the terms of said rental agreements. The rental of any such equipment, machinery, or parts shall cease when the use thereof is no longer necessary for the Work.

d. Sales, consumer, use, and other similar taxes related to the Work, and for which Contractor is liable, as imposed by Laws and Regulations.

e. Deposits lost for causes other than negligence of Contractor, any Subcontractor, or anyone directly or indirectly employed by any of them or for whose acts any of them may be liable, and royalty payments and fees for permits and licenses.

f. Losses and damages (and related expenses) caused by damage to the Work, not compensated by insurance or otherwise, sustained by Contractor in connection with the performance of the Work (except losses and damages within the deductible amounts of property insurance established in accordance with Paragraph 5.06.D), provided such losses and damages have resulted from causes other than the negligence of Contractor, any Subcontractor, or anyone directly or indirectly employed by any of them or for whose acts any of them may be liable. Such losses shall include settlements made with the written consent and approval of Owner. No such losses, damages, and expenses shall be included in the Cost of the Work for the purpose of determining Contractor's fee.

g. The cost of utilities, fuel, and sanitary facilities at the Site.

h. Minor expenses such as telegrams, long distance telephone calls, telephone service at the Site, express and courier services, and similar petty cash items in connection with the Work.

i. The costs of premiums for all bonds and insurance Contractor is required by the Contract Documents to purchase and maintain.

B. *Costs Excluded:* The term Cost of the Work shall not include any of the following items:

1. Payroll costs and other compensation of Contractor's officers, executives, principals (of partnerships and sole proprietorships), general managers, safety managers, engineers, architects, estimators, attorneys, auditors, accountants, purchasing and contracting agents, expediters, timekeepers, clerks, and other personnel employed by Contractor, whether at the Site or in Contractor's principal or branch office for general administration of the Work and not specifically included in the agreed upon schedule of job classifications referred to in Paragraph 11.01.A.1 or specifically covered by Paragraph 11.01.A.4, all of which are to be considered administrative costs covered by the Contractor's fee.

2. Expenses of Contractor's principal and branch offices other than Contractor's office at the Site.

3. Any part of Contractor's capital expenses, including interest on Contractor's capital employed for the Work and charges against Contractor for delinquent payments.

4. Costs due to the negligence of Contractor, any Subcontractor, or anyone directly or indirectly employed by any of them or for whose acts any of them may be liable, including but not limited to, the correction of defective Work, disposal of materials or equipment wrongly supplied, and making good any damage to property.

5. Other overhead or general expense costs of any kind and the costs of any item not specifically and expressly included in Paragraphs 11.01.A.

C. *Contractor's Fee:* Notwithstanding any of the foregoing, the Contractor shall in no event be paid any amounts in excess of the Contract Price, excepting only if the parties execute of a valid written modification, amendment or change order specifically modifying the Contract Price which is signed by the Owner. Contract Price is as set forth in the Agreement. When the value of any Work covered by a Change Order or when a Claim for an adjustment in Contract Price is determined on the basis of Cost of the Work, Contractor's fee shall be determined as set forth in Paragraph 12.01.C and subject to approval in advance by the Owner in Owner's sole discretion.

D. *Documentation:* Whenever the Cost of the Work for any purpose is to be determined pursuant to Paragraphs 11.01.A and 11.01.B, Contractor will establish and maintain records thereof in accordance with generally accepted accounting practices and submit in a form acceptable to Engineer an itemized cost breakdown together with supporting data.

11.02 *Allowances*

A. It is understood that Contractor has included in the Contract Price all allowances (if applicable) so named in the Contract Documents and shall cause the Work so covered to be performed for such sums and by such persons or entities as may be acceptable to Owner and Engineer as set forth in the Agreement.

B. *Cash Allowances:*

1. Contractor agrees that:

a. the cash allowances include the cost to Contractor (less any applicable trade discounts) of materials and equipment required by the allowances to be delivered at the Site, and all applicable taxes; and

b. Contractor's costs for unloading and handling on the Site, labor, installation, overhead, profit, and other expenses contemplated for the cash allowances have been included in the Contract Price and not in the allowances, and no demand for additional payment on account of any of the foregoing will be valid.

C. *Contingency Allowance:*

1. Contractor agrees that a contingency allowance, if any, is for the sole use of Owner to cover unanticipated costs.

D. Prior to final payment, an appropriate Change Order will be issued to reflect actual amounts due Contractor on account of Work covered by allowances if the Work covered by allowances would result in a savings to the Owner and a lower Contract Price, and then the Contract Price shall be correspondingly adjusted down. Engineer will consult with the Owner on a recommended adjustment down, if applicable, for allowances. Notwithstanding any other provision of these General Requirements, Allowances shall never result in an increase in the Contract Price.

11.03 *Unit Price Work*

A. Where the Contract Documents provide that all or part of the Work is to be Unit Price Work, initially the Contract Price will be deemed to include for all Unit Price Work an amount equal to the sum of the unit price for each separately identified item of Unit Price Work times the estimated quantity of each item as indicated in the Agreement.

B. The estimated quantities of items of Unit Price Work are not guaranteed and are solely for the purpose of comparison of Bids and determining an initial Contract Price. Determinations of the actual quantities and classifications of Unit Price Work performed by Contractor will be made by Owner subject to the provisions of Paragraph 9.07.

C. Each unit price will be deemed to include an amount considered by Contractor to be adequate to cover Contractor's overhead and profit for each separately identified item.

D. Owner or Contractor may make a Claim for an adjustment in the Contract Price in accordance with Paragraph 10.05 if:

1. the quantity of any item of Unit Price Work performed by Contractor differs materially and significantly from the estimated quantity of such item indicated in the Agreement; and

2. there is no corresponding adjustment with respect to any other item of Work; and

3. Contractor believes that Contractor is entitled to an increase in Contract Price as a result of having incurred additional expense do to the sole fault or negligence of Owner or Owner believes that Owner is entitled to a decrease in Contract Price and the parties are unable to agree as to the amount of any such increase or decrease.

ARTICLE 12 – CHANGE OF CONTRACT PRICE; CHANGE OF CONTRACT TIMES

12.01 *Change of Contract Price*

A. The Contract Price may only be changed by a written Change Order signed by the Owner. Any Claim for an adjustment in the Contract Price shall be based on written notice submitted by the party making the Claim to the Engineer and the other party to the Contract in accordance with the provisions of Paragraph 10.05.

B. The value of any Work covered by a Change Order or of any Claim for an adjustment in the Contract Price will be determined as follows:

1. where the Work involved is covered by unit prices contained in the Contract Documents, by application of such unit prices to the quantities of the items involved (subject to the provisions of Paragraph 11.03); or

2. where the Work involved is not covered by unit prices contained in the Contract Documents, by a mutually agreed lump sum (which may include an allowance for overhead and profit not necessarily in accordance with Paragraph 12.01.C.2).

C. *Contractor's Fee:* The Contractor's fee for overhead and profit shall be determined as follows:

1. a mutually acceptable fixed fee; or

2. at cost with no mark-up of any kind.

12.02 *Change of Contract Times*

A. The Contract Times may only be changed by a written Change Order signed by the Owner. Any Claim for an adjustment in the Contract Times shall be based on written notice submitted by the party making the Claim to the Engineer and the other party to the Contract in accordance with the provisions of Paragraph 10.05.

B. Any adjustment of the Contract Times covered by a Change Order or any Claim for an adjustment in the Contract Times will be determined in accordance with the provisions of this Article 12.

12.03 *Delays*

A. Where Contractor is prevented from completing any part of the Work within the Contract Times due to delay beyond the reasonable control of Contractor, the Contract Times will be extended in an amount equal to the time lost due to such delay if a Claim is made therefor within no more than ten (10) days of such delay as provided in Paragraph 12.02.A. Delays beyond the control of Contractor are limited to the willful misconduct or gross negligence of Owner, acts or neglect of utility owners or other contractors performing other work as contemplated by Article 7, fires, floods, epidemics, abnormal weather conditions, or acts of God.

B. If Owner, Engineer, or other contractors or utility owners performing other work for Owner as contemplated by Article 7, or anyone for whom Owner is responsible, delays, disrupts, or interferes with the performance or progress of the Work, then Contractor may be entitled to an equitable adjustment in the Contract Price or the Contract Times, or both, and may submit a Claim to Owner for the same. Owner shall only have to consider a request from Contractor for an adjustment of the Contract Times if it is essential to Contractor's ability to complete the Work within the Contract Times.

C. If Contractor is delayed in the performance or progress of the Work by fire, flood, epidemic, abnormal weather conditions, acts of God, acts or failures to act of utility owners not under the control of Owner, or other causes not the fault of and beyond the reasonable control of Owner and Contractor, then Contractor may be entitled to an equitable adjustment in Contract Times, if such adjustment is essential to Contractor's ability to complete the Work within the Contract Times. Such an adjustment shall be Contractor's sole and exclusive remedy for the delays described in this Paragraph 12.03.C.

D. Owner, Engineer, and their officers, directors, members, partners, employees, agents, consultants, or subcontractors shall not be liable to Contractor for any claims, costs, losses, or damages (including but not limited to all fees and charges of engineers, architects, attorneys, and other professionals and all court or arbitration or other dispute resolution costs) sustained by Contractor on or in connection with any other project or anticipated project.

E. Contractor shall not be entitled to an adjustment in Contract Price or Contract Times for delays within the control of Contractor. Delays attributable to and within the control of a Subcontractor or Supplier shall be deemed to be delays within the control of Contractor.

F. When establishing the contract time, an allowance will be made for four (4) calendar days of work lost per month due to inclement weather conditions. The CONTRACTOR, at the time of each periodic pay request, shall submit to the ENGINEER and OWNER for approval a list of all working days lost due to either inclement weather or site conditions caused by inclement weather for the period. Accompanying his list should be a summary of the specific conditions which caused the loss. This request will be reviewed by the ENGINEER in light of observations made by the ENGINEER and resident inspector. Approval of the periodic payment estimate by the ENGINEER, OWNER, and Agency will also include approval of the weather delay request. After substantial completion, and not until then, a change order must be executed if a time extension for weather related delays is requested by the CONTRACTOR. The time extension must be based solely on the time requested within the periodic payment estimates. Subtracted from this time will be the four (4) days per month allowance assumed in the contract. There cannot be a decrease in contract length if the allowance for inclement weather exceeds the actual number of days lost due to inclement weather. To convert working days into calendar days, multiply the working days by seven (7) and divide by the number of working days in a typical work week.

ARTICLE 13 – TESTS AND INSPECTIONS; CORRECTION, REMOVAL OR ACCEPTANCE OF DEFECTIVE WORK

13.01 *Notice of Defects*

A. Prompt notice of all defective Work of which Owner or Engineer has actual knowledge will be given to Contractor. Defective Work may be rejected, corrected, or accepted as provided in this Article 13.

B. Owner's failure to notify Contractor of any Defective Work is not a waiver of any claims of actions Owner may have against Contractor relating thereto.

13.02 *Access to Work*

A. Owner, Engineer, their consultants and other representatives and personnel of Owner, independent testing laboratories, and governmental agencies with jurisdictional interests will have access to the Site and the Work at reasonable times for their observation, inspection, and testing. Contractor shall provide them proper and safe conditions for such access and advise them of Contractor's safety procedures and programs so that they may comply therewith as applicable.

13.03 *Tests and Inspections*

A. Contractor shall give Engineer timely notice of readiness of the Work for all required inspections, tests, or approvals and shall cooperate with inspection and testing personnel to facilitate required inspections or tests.

B. Owner shall employ and pay for the services of an independent testing laboratory to perform all inspections, tests, or approvals required by the Contract Documents except:

1. for inspections, tests, or approvals covered by Paragraphs 13.03.C and 13.03.D below;

2. that costs incurred in connection with tests or inspections conducted pursuant to Paragraph 13.04.B shall be paid as provided in Paragraph 13.04.C; and

3. as otherwise specifically provided in the Contract Documents.

C. If Laws or Regulations of any public body having jurisdiction require any Work (or part thereof) specifically to be inspected, tested, or approved by an employee or other representative of such public body, Contractor shall assume full responsibility for arranging and obtaining such inspections, tests, or approvals, pay all costs in connection therewith, and furnish Engineer the required certificates of inspection or approval.

D. Contractor shall be responsible for arranging and obtaining and shall pay all costs in connection with any inspections, tests, or approvals required for Owner's and Engineer's acceptance of materials or equipment to be incorporated in the Work; or acceptance of materials, mix designs, or equipment submitted for approval prior to Contractor's purchase thereof for incorporation in the Work. Such inspections, tests, or approvals shall be performed by organizations acceptable to Owner and Engineer.

E. If any Work (or the work of others) that is to be inspected, tested, or approved is covered by Contractor without written concurrence of Engineer and Owner, Contractor shall, if requested by Engineer or Owner, uncover such Work for observation.

F. Uncovering Work as provided in Paragraph 13.03.E shall be at Contractor's expense unless Contractor has given Engineer and Owner timely notice of Contractor's intention to cover the same and neither Owner nor Engineer has not acted with reasonable promptness in response to such notice. If Owner or Engineer responds within fourteen (14) days of receipt of Contractor's notice, such response is per se prompt.

13.04 *Uncovering Work*

A. If any Work is covered contrary to the written request of Engineer or Owner, it must, if requested by Engineer or Owner, be uncovered for Engineer's or Owner's observation and replaced at Contractor's expense.

1. Whether or not the uncovered Work is found to be defective, CONTRACTOR shall pay all claims, costs, losses, and damages as indicated in Paragraph 13.04.B.1.

B. If Owner considers it necessary or advisable that covered Work be observed by Owner or inspected or tested by others, Contractor, at Owner's request, shall uncover, expose, or otherwise make available for observation, inspection, or testing as Owner may require, that portion of the Work in question, furnishing all necessary labor, material, and equipment.

1. If it is found that the uncovered Work is defective, Contractor shall pay all claims, costs, losses, and damages (including but not limited to all fees and charges of engineers, architects, attorneys, and other professionals and all court or arbitration or other dispute resolution costs) arising out of or relating to such uncovering, exposure, observation, inspection, and testing, and of satisfactory replacement or reconstruction (including but not limited to all costs of repair or replacement of work of others); and Owner shall be entitled

to an appropriate decrease in the Contract Price. If the parties are unable to agree as to the amount thereof, Owner may make a Claim therefor as provided in Paragraph 10.05.

2. If the uncovered Work is not found to be defective, Contractor may request an increase in the Contract Price or an extension of the Contract Times, or both, directly attributable to such uncovering, exposure, observation, inspection, testing, replacement, and reconstruction. If the parties are unable to agree as to the amount or extent thereof, Contractor may make a Claim therefor as provided in Paragraph 10.05.

13.05 *Owner May Stop the Work*

A. If the Work is defective, or Contractor fails to supply sufficient skilled workers or suitable materials or equipment, or fails to perform the Work in such a way that the completed Work will conform to the Contract Documents, Owner may order Contractor to stop the Work, or any portion thereof, until the cause for such order has been eliminated; however, this right of Owner to stop the Work shall not give rise to any duty on the part of Owner to exercise this right for the benefit of Contractor, any Subcontractor, any Supplier, any other individual or entity, or any surety for, or employee or agent of any of them.

13.06 *Correction or Removal of Defective Work*

A. Promptly after receipt of written notice, Contractor shall correct all defective Work, whether or not fabricated, installed, or completed, or, if the Work has been rejected by Owner, remove it from the Project and replace it with Work that is not defective. Contractor shall pay all claims, costs, losses, and damages (including but not limited to all fees and charges of engineers, architects, attorneys, and other professionals and all court or arbitration or other dispute resolution costs) arising out of or relating to such correction or removal (including but not limited to all costs of repair or replacement of work of others).

B. When correcting defective Work under the terms of this Paragraph 13.06 or Paragraph 13.07, Contractor shall take no action that would void or otherwise impair Owner's special warranty and guarantee, if any, on said Work.

13.07 *Correction Period*

A. If within three years after the date of Final Completion (or such longer period of time as may be prescribed by the terms of any applicable special guarantee required by the Contract Documents) or by any specific provision of the Contract Documents, any Work is found to be defective, or if the repair of any damages to the land or areas made available for Contractor's use by Owner or permitted by Laws and Regulations as contemplated in Paragraph 6.11.A is found to be defective, Contractor shall promptly, without cost to Owner and in accordance with Owner's written instructions:

1. repair such defective land or areas; or

2. correct such defective Work; or

3. if the defective Work has been rejected by Owner, remove it from the Project and replace it with Work that is not defective, and

4. satisfactorily correct or repair or remove and replace any damage to other Work, to the work of others or other land or areas resulting therefrom.

B. If Contractor does not promptly comply with the terms of Owner's written instructions, or in an emergency where delay would cause serious risk of loss or damage, Owner may have the defective Work corrected or repaired or may have the rejected Work removed and replaced. All claims, costs, losses, and damages (including but not limited to all fees and charges of engineers, architects, attorneys, and other professionals and all court or arbitration or other dispute resolution costs) arising out of or relating to such correction or repair or such removal and replacement (including but not limited to all costs of repair or replacement of work of others) will be paid by Contractor.

C. In special circumstances where a particular item of equipment is placed in continuous service before Final Completion of all the Work, the correction period for that item may will still start to run from Final Completion.

D. Where defective Work (and damage to other Work resulting therefrom) has been corrected or removed and replaced under this Paragraph 13.07, the correction period hereunder with respect to such Work will be extended for an additional period of three years after such correction or removal and replacement has been satisfactorily completed.

E. Contractor's obligations under this Paragraph 13.07 are in addition to any other obligation or warranty. The provisions of this Paragraph 13.07 shall not be construed as a substitute for, or a waiver of, the provisions of any applicable statute of limitation or repose.

13.08 *Intentionally omitted.*

13.09 *Owner May Correct Defective Work*

A. If Contractor fails within a reasonable time after written notice from Owner to correct defective Work, or to remove and replace rejected Work as required by Owner in accordance with Paragraph 13.06.A, or if Contractor fails to perform the Work in accordance with the Contract Documents, or if Contractor fails to comply with any other provision of the Contract Documents, Owner may, after seven days written notice to Contractor, correct, or remedy any such deficiency.

B. In exercising the rights and remedies under this Paragraph 13.09, Owner shall proceed expeditiously. In connection with such corrective or remedial action, Owner may exclude Contractor from all or part of the Site, take possession of all or part of the Work and suspend Contractor's services related thereto, take possession of Contractor's tools, appliances, construction equipment and machinery at the Site, and incorporate in the Work all materials and equipment stored at the Site or for which Owner has paid Contractor but which are stored elsewhere. Contractor shall allow Owner, Owner's representatives, agents and employees, Owner's other contractors, and Engineer and Engineer's consultants access to the Site to enable Owner to exercise the rights and remedies under this Paragraph.

C. All claims, costs, losses, and damages (including but not limited to all fees and charges of engineers, architects, attorneys, and other professionals and all court or arbitration or other dispute resolution costs) incurred or sustained by Owner in exercising the rights and remedies under this Paragraph 13.09 will be charged against Contractor, and a Change Order will be

issued incorporating the necessary revisions in the Contract Documents with respect to the Work; and Owner shall be entitled to an appropriate decrease in the Contract Price. If the parties are unable to agree as to the amount of the adjustment, Owner may make a Claim therefor as provided in Paragraph 10.05. Such claims, costs, losses and damages will include but not be limited to all costs of repair, or replacement of work of others destroyed or damaged by correction, removal, or replacement of Contractor's defective Work.

D. Contractor shall not be allowed an extension of the Contract Times because of any delay in the performance of the Work attributable to the exercise by Owner of Owner's rights and remedies under this Paragraph 13.09.

ARTICLE 14 – PAYMENTS TO CONTRACTOR AND COMPLETION

14.01 *Schedule of Values*

A. The Schedule of Values with those Milestones established as provided in Paragraph 2.07.A, if any and if requested by Contractor in its Bid, will serve as the basis for progress payments and will be incorporated into a form of Application for Payment acceptable to Owner. Progress payments on account of Unit Price Work will be based on the number of units completed.

14.02 *Progress Payments*

A. *Applications for Payments:*

1. No sooner than the later to occur of any date established in the Agreement for each progress payment based on completion of a Milestone or the actual completion of Work on that Milestone (but not more often than once a month), Contractor shall submit to Engineer for review an Application for Payment filled out and signed by Contractor covering the Work completed as of the date of the Application and accompanied by such supporting documentation as is required by the Contract Documents. If payment includes materials and/or equipment, then the Application for Payment shall also be accompanied by a bill of sale, invoice, or other documentation warranting that Owner has received the materials and equipment free and clear of all Liens and evidence that the materials and equipment are covered by appropriate property insurance or other arrangements to protect Owner's interest therein, all of which must be satisfactory to Owner. Owner shall have 45 days from receipt of any valid Application for Payment based on completion of a Milestone to either: (i) determine that the Milestone has been met to the Owner's sole satisfaction and to pay the same (however making payment does not waive any claims Owner may have again Contractor if the Work is later found to be defective, incomplete, or otherwise not in strict conformance with the Contract Documents or Agreement); or (ii) to notify the Contractor that the Work on the Milestone is unsatisfactory and payment is therefore denied. Owner shall not be deemed to have received the Contractor's valid Application for Payment until the Owner has received said Application for Payment and also has received Engineer's recommendation that the Application for Payment be paid as set forth in 14.02(B) below.

2. Beginning with the second Application for Payment, each Application shall include an affidavit of Contractor stating that all previous progress payments received on account of the Work have been applied on account to discharge Contractor's legitimate obligations associated with prior Applications for Payment.

3. The amount of retainage with respect to progress payments for Milestones will be as stipulated in the Agreement.

B. *Review of Applications:*

1. Engineer will, within 10 days after receipt of each Application for Payment, either indicate in writing a recommendation of payment and present the Application to Owner or return the Application to Contractor indicating in writing Engineer's reasons for refusing to recommend payment. In the latter case, Contractor may make the necessary corrections and resubmit the Application.

2. Engineer's recommendation of any payment requested in an Application for Payment will constitute a representation by Engineer to Owner, based on Engineer's observations of the executed Work as an experienced and qualified design professional, and on Engineer's review of the Application for Payment and the accompanying data and schedules, that to the best of Engineer's knowledge, information and belief:

   a. the Work has progressed to the point indicated;

   b. the quality of the Work is generally in accordance with the Contract Documents (subject to an evaluation of the Work as a functioning whole prior to or upon Substantial Completion, the results of any subsequent tests called for in the Contract Documents, a final determination of quantities and classifications for Unit Price Work under Paragraph 9.07, and any other qualifications stated in the recommendation); and

   c. the conditions precedent to Contractor's being entitled to such payment appear to have been fulfilled in so far as it is Engineer's responsibility to observe the Work.

3. By recommending any such payment Engineer will not thereby be deemed to have represented that:

   a. inspections made to check the quality or the quantity of the Work as it has been performed have been exhaustive, extended to every aspect of the Work in progress, or involved detailed inspections of the Work beyond the responsibilities specifically assigned to Engineer in the Contract Documents; or

   b. there may not be other matters or issues between the parties that might entitle Contractor to be paid additionally by Owner or entitle Owner to withhold payment to Contractor.

4. Neither Engineer's review of Contractor's Work for the purposes of recommending payments nor Engineer's recommendation of any payment, including final payment, will impose responsibility on Engineer:

   a. to supervise, direct, or control the Work, or

   b. for the means, methods, techniques, sequences, or procedures of construction, or the safety precautions and programs incident thereto, or

c. for Contractor's failure to comply with Laws and Regulations applicable to Contractor's performance of the Work, or

d. to make any examination to ascertain how or for what purposes Contractor has used the moneys paid on account of the Contract Price, or

e. to determine that title to any of the Work, materials, or equipment has passed to Owner free and clear of any Liens.

5. Engineer may refuse to recommend the whole or any part of any payment if, in Engineer's opinion, it would be incorrect to make the representations to Owner stated in Paragraph 14.02.B.2. Engineer may also refuse to recommend any such payment or, because of subsequently discovered evidence or the results of subsequent inspections or tests, revise or revoke any such payment recommendation previously made, to such extent as may be necessary in Engineer's opinion to protect Owner from loss because:

a. the Work is defective, or completed Work has been damaged, requiring correction or replacement;

b. the Contract Price has been reduced by Change Orders;

c. Owner has been required to correct defective Work or complete Work in accordance with Paragraph 13.09; or

d. Engineer has actual knowledge of the occurrence of any of the events enumerated in Paragraph 15.02.A.

C. *Payment Becomes Due:*

1. Owner shall have 45 days from receipt of any valid Application for Payment based on completion of a Milestone to either: (i) determine that the Milestone has been met to the Owner's sole satisfaction and to pay the same (however making payment does not waive any claims Owner may have again Contractor if the Work is later found to be defective, incomplete, or otherwise not in strict conformance with the Contract Documents or Agreement); or (ii) to notify the Contractor that the Work on the Milestone is unsatisfactory and payment is therefore denied. Owner shall not be deemed to have received the Contractor's valid Application for Payment until the Owner has received said Application for Payment and also has received Engineer's recommendation that the Application for Payment be paid as set forth in 14.02(B) below.

D. *Reduction in Payment:*

1. Owner may refuse to make payment of the full amount recommended by Engineer because:

a. claims have been made against Owner on account of Contractor's performance or furnishing of the Work;

b. Liens have been filed in connection with the Work, except where Contractor has delivered a specific bond satisfactory to Owner to secure the satisfaction and discharge of such Liens;

c. there are other items entitling Owner to a set-off against the amount recommended;

d. Owner has actual knowledge of the occurrence of any of the events enumerated in Paragraphs 14.02.B.5.a through 14.02.B.5.c or Paragraph 15.02.A or

e. Owner notifies the Contractor that the Work on the Milestone is unsatisfactory or the Work is not in strict conformance with the Contract Documents and payment is therefore denied in whole or part.

2. If Owner refuses to make payment of the full amount recommended by Engineer, Owner will give Contractor immediate written notice (with a copy to Engineer) stating the reasons for such action and promptly pay Contractor any amount remaining after deduction of the amount so withheld. Owner shall promptly pay Contractor the amount so withheld, or any adjustment thereto agreed to by Owner and Contractor, when Contractor remedies the reasons for such action.

3. Upon a subsequent determination that Owner's refusal of payment was not justified, the amount wrongfully withheld shall be treated as an amount due as determined by Paragraph 14.02.C.1 and subject to interest as provided in the Agreement.

14.03 *Contractor's Warranty of Title*

A. Contractor warrants and guarantees that title to all Work, materials, and equipment covered by any Application for Payment, whether incorporated in the Project or not, will pass to Owner no later than the time of payment free and clear of all Liens.

14.04 *Substantial Completion*

A. When Contractor considers the entire Work ready for its intended use Contractor shall notify Owner and Engineer in writing that the entire Work is substantially complete (except for only nominal insubstantial items specifically listed by Contractor as incomplete) and request that Engineer issue a certificate of Substantial Completion.

B. Promptly after Contractor's notification, Owner, Contractor, and Engineer shall make an inspection of the Work to determine the status of completion. If Engineer does not consider the Work substantially complete, Engineer will notify Owner in writing giving the reasons therefor. If Owner does not consider the Work substantially complete, Owner will notify Contractor in writing giving the reasons therefor.

C. If Owner considers the Work substantially complete, Engineer will deliver to Owner a tentative certificate of Substantial Completion which shall fix the date of Substantial Completion. There shall be attached to the certificate a tentative list of items to be completed or corrected before final payment. Owner will review the draft certificate of Substantial Completion (with a tentative list of items to be completed or corrected) prepared by Engineer. Owner may revise and shall finalize the certificate of Substantial Completion with a final list of items to be completed or corrected.

D. At the time of delivery of the tentative certificate of Substantial Completion, Engineer will deliver to Owner a written recommendation as to division of responsibilities pending final payment between Owner and Contractor with respect to security, operation, safety, and

protection of the Work, maintenance, heat, utilities, insurance, and warranties and guarantees. Owner will review the recommendation and revise the same as Owner deems appropriate. When the recommendation of the division of responsibilities pending final payment is acceptable to the Owner in its sole discretion, the Owner will deliver it to the Contractor and Engineer.

E. Owner shall have the right to exclude Contractor from the Site after the date of Substantial Completion subject to allowing Contractor reasonable access to remove its property and complete or correct items on the tentative list.

14.05 *Partial Utilization*

A. Prior to Substantial Completion of all the Work, Owner may use or occupy any substantially completed part of the Work which has specifically been identified in the Contract Documents, or which Owner and Contractor agree constitutes a separately functioning and usable part of the Work that can be used by Owner for its intended purpose without significant interference with Contractor's performance of the remainder of the Work, subject to the following conditions:

1. Owner at any time may request Contractor in writing to permit Owner to use or occupy any such part of the Work which Owner believes to be ready for its intended use and substantially complete, and such permission shall not be unreasonably withheld or delayed. If and when Contractor agrees that such part of the Work is substantially complete, Contractor, Owner, and Owner will follow the procedures of Paragraph 14.04.A through D for that part of the Work.

2. Contractor at any time may notify Owner and Engineer in writing that Contractor considers any such part of the Work ready for its intended use and substantially complete and request Engineer to issue a certificate of Substantial Completion for that part of the Work.

3. Within a reasonable time after either such request, Owner, Contractor, and Engineer shall make an inspection of that part of the Work to determine its status of completion. If Engineer does not consider that part of the Work to be substantially complete, Engineer will notify Owner and Contractor in writing giving the reasons therefor.

4. No use or occupancy or separate operation of part of the Work may occur prior to compliance with the requirements of Paragraph 5.10 regarding property insurance.

5. Liquidated Damages, as provided for in the Agreement, will not be reduced or delayed due to partial utilization.

14.06 *Final Inspection*

A. Upon written notice from Contractor that the entire Work or an agreed portion thereof is complete, Engineer will promptly make a final inspection with Owner and Contractor and then the Owner will notify Contractor in writing of all particulars in which this inspection reveals that the Work is incomplete or defective. Contractor shall immediately take such measures as are necessary to complete such Work or remedy such deficiencies.

14.07 *Final Payment*

A. *Application for Payment:*

1. After Contractor has, in the opinion of Owner, satisfactorily completed all corrections identified during the final inspection and has delivered, in accordance with the Contract Documents, all maintenance and operating instructions, warranty documentation, schedules, guarantees, bonds, certificates or other evidence of insurance, certificates of inspection, marked-up record documents (as provided in Paragraph 6.12), and other documents, Contractor may make application for final payment following the procedure for progress payments.

2. The final Application for Payment shall be accompanied (except as previously delivered) by:

   a. all documentation called for in the Contract Documents, including but not limited to the evidence of insurance required by Paragraph 5.04.B.6;

   b. consent of the surety, if any, to final payment;

   c. a list of all Claims against Owner that Contractor believes are unsettled; and

   d. complete and legally effective releases or waivers (satisfactory to Owner) of all Lien rights arising out of or Liens filed in connection with the Work. Such releases or waivers shall be provided in addition to affidavits required by Paragraph 14.02.A.2.

3. In lieu of the releases or waivers of Liens specified in Paragraph 14.07.A.2 and as approved by Owner in the Owner's sole discretion, Contractor may furnish receipts or releases in full and an affidavit of Contractor that: (i) the releases and receipts include all labor, services, material, and equipment for which a Lien could be filed; and (ii) all payrolls, material and equipment bills, and other indebtedness connected with the Work for which Owner might in any way be responsible, or which might in any way result in liens or other burdens on Owner's property, have been paid or otherwise satisfied. If any Subcontractor or Supplier fails to furnish such a release or receipt in full, Contractor may furnish a bond or other collateral satisfactory to Owner to indemnify Owner against any Lien.

B. *Owner and Engineer's Review of Application and Acceptance:*

1. If, on the basis of Engineer's observation of the Work during construction and final inspection, and Owner's and Engineer's review of the final Application for Payment and accompanying documentation as required by the Contract Documents, Owner and Engineer are satisfied that the Work has been completed and Contractor's other obligations under the Contract Documents have been fulfilled, Engineer will, within ten days after receipt of the final Application for Payment, indicate in writing Engineer's recommendation of payment and present the Application for Payment to Owner for payment. At the same time Engineer will also give written notice to Owner that the Work is acceptable to Engineer subject to the provisions of Paragraph 14.09. Otherwise, Engineer will return the Application for Payment to Contractor, indicating in writing the

reasons for refusing to recommend final payment, in which case Contractor shall make the necessary corrections and resubmit the Application for Payment.

C. *Payment Becomes Due:*

1. Owner shall have 45 days from receipt of any valid Application for Payment based on final completion to either: (i) determine that the Work is complete, the Work is in strict conformance to the Contract Documents and Agreement and that no Claims are outstanding to the Owner's sole satisfaction and to pay the same (however making payment does not waive any claims Owner may have again Contractor if the Work is later found to be defective, incomplete, or otherwise not in strict conformance with the Contract Documents or Agreement); or (ii) to notify the Contractor that the Work incomplete or unsatisfactory not in strict conformance to the Contract Documents or Agreement or that a Claim is unresolved and payment is therefore denied. Owner shall not be deemed to have received the Contractor's valid Application for Payment until the Owner has received said Application for Payment and also has received Engineer's recommendation that the Application for Payment be paid as set forth in 14.07(B) above. Notwithstanding any provision of these General Requirements, while any Claim is outstanding, any Work is incomplete or defective, or any Work is not in strict conformance with the Contract Documents, Final Payment shall not be due or owing.

2. A valid Application for Payment and accompanying documentation must not request a payment that exceeds the final amount owed less any sum Owner is entitled to set off against Engineer's recommendation, including but not limited to liquidated damages.

14.08 *Final Completion Delayed*

A. Even if, through no fault of Contractor, final completion of the Work is significantly delayed, the final Application for Payment will be delayed until the Work is complete and payment will be due as described under 14.07(C) above.

14.09 *Waiver of Claims*

A. The making and acceptance of final payment will not constitute a waiver of any Claims by Owner against Contractor, including without limitation, Claims arising from unsettled Liens, from defective Work appearing after final inspection pursuant to Paragraph 14.06, from failure to comply with the Contract Documents or the terms of any special guarantees specified therein, or from Contractor's continuing obligations under the Contract Documents.

B. The making of final payment will not constitute a waiver of any Claims by Owner against Contractor, including without limitation, Claims arising from unsettled Liens, from defective Work appearing after final inspection pursuant to Paragraph 14.06, from failure to comply with the Contract Documents or the terms of any special guarantees specified therein, or from Contractor's continuing obligations under the Contract Documents.

C. The acceptance by Contractor of final payment will constitute a waiver of all Claims by Contractor against Owner other than those previously made in accordance with the requirements herein and expressly acknowledged by Owner in writing as still unsettled.

ARTICLE 15 – SUSPENSION OF WORK AND TERMINATION

15.01 *Owner May Suspend Work*

A. At any time and without cause, Owner may suspend the Work or any portion thereof for a period of not more than 90 consecutive days by notice in writing to Contractor and Engineer which will fix the date on which Work will be resumed. Contractor shall resume the Work on the date so fixed. If the suspension is due to no fault of Contractor, Contractor may be granted an adjustment in the Contract Price or an extension of the Contract Times, or both, directly attributable to any such suspension if Contractor makes a Claim therefor as provided in Paragraph 10.05 and upon approval of such adjustment by the Owner in the Owner's sole discretion.

15.02 *Owner May Terminate for Cause*

A. The occurrence of any one or more of the following events will justify termination for cause:

1. Contractor's persistent failure to perform the Work in accordance with the Contract Documents (including, but not limited to, failure to supply sufficient skilled workers or suitable materials or equipment or failure to adhere to the Progress Schedule established under Paragraph 2.07 as adjusted from time to time pursuant to Paragraph 6.04);

2. Contractor's disregard of Laws or Regulations of any public body having jurisdiction;

3. Contractor's repeated disregard of the authority of Engineer; or

4. Contractor's violation in any substantial way of any provisions of the Contract Documents.

B. If one or more of the events identified in Paragraph 15.02.A occur, Owner may, after giving Contractor (and surety) seven days written notice of its intent to terminate the services of Contractor:

1. exclude Contractor from the Site, and take possession of the Work and of all Contractor's tools, appliances, construction equipment, and machinery at the Site, and use the same to the full extent they could be used by Contractor (without liability to Contractor for trespass or conversion);

2. incorporate in the Work all materials and equipment stored at the Site or for which Owner has paid Contractor but which are stored elsewhere; and

3. complete the Work as Owner may deem expedient.

C. If Owner proceeds as provided in Paragraph 15.02.B, Contractor shall not be entitled to receive any further payment until the Work is completed. If the unpaid balance of the Contract Price exceeds all claims, costs, losses, and damages (including but not limited to all fees and charges of engineers, architects, attorneys, and other professionals and all court or arbitration or other dispute resolution costs) sustained by Owner arising out of or relating to completing the Work, such excess will be retained by the Owner. If such claims, costs, losses, and damages exceed such unpaid balance, Contractor shall pay the difference to Owner. When

exercising any rights or remedies under this Paragraph, Owner shall not be required to obtain the lowest price for the Work performed. Nothing herein shall limit any claims or actions Owner may have against Contractor.

D. Notwithstanding Paragraphs 15.02.B and 15.02.C, Contractor's services will not be terminated if Contractor begins within seven days of receipt of notice of intent to terminate to correct its failure to perform and proceeds diligently to cure such failure within no more than 10 days of receipt of said notice and provides written notice of its plan of correction to Owner and Owner accepts Contractor's plan in its sole discretion. Should Contractor thereafter fail to act to diligently cure its failure in strict conformance with the plan submitted to the Owner, then the Owner shall notify the Contractor of such failure and may immediately terminate for cause.

E. Where Contractor's services have been so terminated by Owner, the termination will not affect any rights or remedies of Owner against Contractor then existing or which may thereafter accrue. Any retention or payment of moneys due Contractor by Owner will not release Contractor from liability.

F. If and to the extent that Contractor has provided a performance bond under the provisions of Paragraph 5.01.A, the termination procedures of that bond shall supersede the provisions of Paragraphs 15.02.B and 15.02.C.

G. These rights of termination shall be in addition to any rights of termination the Owner may have under the County's General Terms and nothing herein is intended to limit such rights and shall not be construed as a limit on such rights.

15.03 *Owner May Terminate for Convenience*

A. Upon seven days written notice to Contractor and Engineer, Owner may, without cause and without prejudice to any other right or remedy of Owner, terminate the Contract. In such case, Contractor shall be paid for (without duplication of any items):

1. completed and acceptable Work executed in accordance with the Contract Documents prior to the effective date of termination; and

2. expenses sustained prior to the effective date of termination in performing services and furnishing labor, materials, or equipment as required by the Contract Documents in connection with uncompleted Work.

B. Contractor shall not be paid on account of loss of anticipated profits or revenue or other economic loss arising out of or resulting from such termination.

15.04 *Contractor May Stop Work or Terminate*

A. If Contractor has pursued all Work diligently and in strict conformance with the Agreement and Contract Documents, and through no act or fault of Contractor, (i) the Work is suspended for more than 90 consecutive days by Owner or under an order of court or other public authority, or (ii) Owner fails to act on any valid and undisputed Application for Payment within 45 days after it is submitted, or (iii) Owner fails for 90 days to pay Contractor any sum finally determined to be due, then Contractor may, upon 30 days written notice to Owner and

Engineer, and provided Owner or Engineer do not remedy such suspension or failure within that time, terminate the Contract and recover from Owner payment on the same terms as provided in Paragraph 15.03.

B. In lieu of terminating the Contract and without prejudice to any other right or remedy, if Engineer has failed to act on a valid and undisputed Application for Payment within 90 days after it is submitted, or Owner has failed for 90 days to pay Contractor any sum finally determined to be due, Contractor may, seven days after written notice to Owner and Engineer, stop the Work until payment is made of all such amounts due Contractor. The provisions of this Paragraph 15.04 are not intended to preclude Contractor from making a Claim under Paragraph 10.05 for an adjustment in Contract Price or Contract Times or otherwise for expenses or damage directly attributable to Contractor's stopping the Work as permitted by this Paragraph.

ARTICLE 16 – INTENTIONALLY OMITTED.

ARTICLE 17 – MISCELLANEOUS

17.01 *Giving Notice*

A. Whenever any provision of the Contract Documents requires the giving of written notice, it will be deemed to have been validly given if:

1. delivered in person or mailed registered or certified (postage prepaid) to the head administrator of the organization or of the department responsible for matters related to the Project.

17.02 *Computation of Times*

A. When any period of time is referred to in the Contract Documents by days, it will be computed to exclude the first and include the last day of such period.

17.03 *Cumulative Remedies*

A. The duties and obligations imposed by these General Conditions and the rights and remedies available hereunder to the parties hereto are in addition to, and are not to be construed in any way as a limitation of, any rights and remedies available to any or all of them which are otherwise imposed or available by Laws or Regulations, by special warranty or guarantee, or by other provisions of the Contract Documents. The provisions of this Paragraph will be as effective as if repeated specifically in the Contract Documents in connection with each particular duty, obligation, right, and remedy to which they apply.

17.04 *Survival of Obligations*

A. All representations, indemnifications, warranties, and guarantees made in, required by, or given in accordance with the Contract Documents, as well as all continuing obligations indicated in the Contract Documents, will survive final payment, completion, and acceptance of the Work or termination or completion of the Contract or termination of the services of Contractor.

17.05 *Controlling Law*

A. This Contract is to be governed by the law of the state in which the Project is located.

17.06 *Headings*

A. Article and paragraph headings are inserted for convenience only and do not constitute parts of these General Conditions.

END OF SECTION

Exhibit G

Exhibit G1

Contractor's Application for Payment No. _____

	Application Period:	Application Date:
To (Owner): Fluvanna County	From (Contractor):	Via (Engineer):
Project: Zion Crossroads Elevated Water Storage Tank	Contract:	
Owner's Contract No.:	Contractor's Project No.:	Engineer's Project No.: 50078862

Application For Payment

Change Order Summary

Approved Change Orders		
Number	Additions	Deductions
TOTALS		
NET CHANGE BY CHANGE ORDERS		

1. ORIGINAL CONTRACT PRICE..... $ _____

2. Net change by Change Orders..... $ _____

3. Current Contract Price (Line 1 ± 2)..... $ _____

4. TOTAL COMPLETED AND STORED TO DATE

(Column F on Progress Estimate)..... $ _____

5. RETAINAGE:

a. X _____ **Work Completed**..... $ _____

b. X _____ **Stored Material**..... $ _____

c. Total Retainage (Line 5a + Line 5b)..... $ _____

6. AMOUNT ELIGIBLE TO DATE (Line 4 - Line 5c)..... $ _____

7. LESS PREVIOUS PAYMENTS (Line 6 from prior Application)..... $ _____

8. AMOUNT DUE THIS APPLICATION..... $ _____

9. BALANCE TO FINISH, PLUS RETAINAGE

(Column G on Progress Estimate + Line 5 above)..... $ _____

Contractor's Certification

The undersigned Contractor certifies that to the best of its knowledge: (1) all previous progress payments received from Owner on account of Work done under the Contract have been applied on account to discharge Contractor's legitimate obligations incurred in connection with Work covered by prior Applications for Payment; (2) title of all Work, materials and equipment incorporated in said Work or otherwise listed in or covered by this Application for Payment will pass to Owner at time of payment free and clear of all Liens, security interests and encumbrances (except such as are covered by a Bond acceptable to Owner indemnifying Owner against any such Liens, security interest or encumbrances); and (3) all Work covered by this Application for Payment is in accordance with the Contract Documents and is not defective.

By:	Date:

Payment of: $ _____

(Line 8 or other - attach explanation of the other amount)

is recommended by: _____ _____

(Engineer) (Date)

Payment of: $ _____

(Line 8 or other - attach explanation of the other amount)

is approved by: _____ _____

(Owner) (Date)

Approved by: _____ _____

Funding Agency (if applicable) (Date)

Endorsed by the Construction Specifications Institute.

© 2007 National Society of Professional Engineers for EJCDC. All rights reserved.

BOS 2019-01-09 p.334/1491

Progress Estimate

Contractor's Application

For (contract):	Application Number:
Application Period:	Application Date:

A		B	Work Completed		E	F		G
Item		Scheduled Value	C	D	Materials Presently Stored (not in C or D)	Total Completed and Stored to Date (C + D + E)	% (F) B	Balance to Finish (B - F)
Specification Section No.	Description		From Previous Application (C+D)	This Period				
	Totals							

© 2007 National Society of Professional Engineers for EJCDC. All rights reserved.

BOS 2019-01-09 p.335/1491

Progress Estimate

Contractor's Application

For (contract):	Application Number:
Application Period:	Application Date:

A				B	C	D	E	F		
Item		Bid Quantity	Unit Price	Bid Value	Estimated Quantity Installed	Value	Materials Presently Stored (not in C)	Total Completed and Stored to Date (D + E)	% (F) B	Balance to Finish (B - F)
Bid Item No.	Description									
	Totals									

© 2007 National Society of Professional Engineers for EJCDC. All rights reserved.

BOS 2019-01-09 p.336/1491

Stored Material Summary

Contractor's Application

For (contract):	Application Number:
Application Period:	Application Date:

A	B	C	D		E		F		G
			Stored Previously		Stored this Month		Incorporated in Work		
Invoice No.	Shop Drawing Transmittal No.	Materials Description	Date (Month/Year)	Amount ($)	Amount ($)	Subtotal	Date (Month/Year)	Amount ($)	Materials Remaining in Storage ($) (D + E - F)
		Totals							

© 2007 National Society of Professional Engineers for EJCDC. All rights reserved.

BOS 2019-01-09 p.337/1491

Exhibit G2

Certificate of Substantial Completion

Project: Zion Crossroads Elevated Water Storage Tank	
Owner: Fluvanna County	Owner's Contract No.:
Contract:	Engineer's Project No.: 50078862

This [tentative] [definitive] Certificate of Substantial Completion applies to:

☐ All Work under the Contract Documents: ☐ The following specified portions of the Work:

_____

_____

_____

_____

_____
Date of Substantial Completion

The Work to which this Certificate applies has been inspected by authorized representatives of Owner, Contractor, and Engineer, and found to be substantially complete. The Date of Substantial Completion of the Project or portion thereof designated above is hereby declared and is also the date of commencement of applicable warranties required by the Contract Documents, except as stated below.

A [tentative] [definitive] list of items to be completed or corrected is attached hereto. This list may not be all-inclusive, and the failure to include any items on such list does not alter the responsibility of the Contractor to complete all Work in accordance with the Contract Documents.

The responsibilities between Owner and Contractor for security, operation, safety, maintenance, heat, utilities, insurance and warranties shall be as provided in the Contract Documents except as amended as follows:

☐ Amended Responsibilities ☐ Not Amended

Owner's Amended Responsibilities:

_____

_____

_____

Contractor's Amended Responsibilities:

_____

_____

_____

_____

The following documents are attached to and made part of this Certificate:

_____

_____

_____

This Certificate does not constitute an acceptance of Work not in accordance with the Contract Documents nor is it a release of Contractor's obligation to complete the Work in accordance with the Contract Documents.

Executed by Engineer	Date
Accepted by Contractor	Date
Accepted by Owner	Date

Exhibit G3

Work Change Directive

No. _____

Date of Issuance: _____ Effective Date: _____

Project: Zion Crossroads Elevated Water Storage Tank	Owner: Fluvanna County	Owner's Contract No.:
Contract:		Date of Contract:
Contractor:		Engineer's Project No.: 50078862

Contractor is directed to proceed promptly with the following change(s):

Item No.	Description

Attachments (list documents supporting change):

_____

_____

Purpose for Work Change Directive:

Authorization for Work described herein to proceed on the basis of Cost of the Work due to:

- ☐ Nonagreement on pricing of proposed change.
- ☐ Necessity to expedite Work described herein prior to agreeing to changes on Contract Price and Contract Time.

Estimated change in Contract Price and Contract Times:

Contract Price $_____ (increase/decrease) Contract Time _____ (increase/decrease) days

Recommended for Approval by Engineer:	Date
Authorized for Owner by:	Date
Received for Contractor by:	Date
Received by Funding Agency (if applicable):	Date:

Exhibit G4

Change Order

No. _____

Date of Issuance: _____ Effective Date: _____

Project: Zion Crossroads Elevated Water Storage Tank	Owner: Fluvanna County	Owner's Contract No.:
Contract:		Date of Contract:
Contractor:		Engineer's Project No.: 50078862

The Contract Documents are modified as follows upon execution of this Change Order:

Description:

Attachments (list documents supporting change):

CHANGE IN CONTRACT PRICE:	**CHANGE IN CONTRACT TIMES:**
Original Contract Price: $_____	Original Contract Times: ☐ Working days ☐ Calendar days Substantial completion (days or date): _____ Ready for final payment (days or date): _____
[Increase] [Decrease] from previously approved Change Orders No. _____ to No. $_____	[Increase] [Decrease] from previously approved Change Orders Substantial completion (days): _____ Ready for final payment (days): _____
Contract Price prior to this Change Order: $_____	Contract Times prior to this Change Order: Substantial completion (days or date): _____ Ready for final payment (days or date): _____
[Increase] [Decrease] of this Change Order: $_____	[Increase] [Decrease] of this Change Order: Substantial completion (days or date): _____ Ready for final payment (days or date): _____
Contract Price incorporating this Change Order: $_____	Contract Times with all approved Change Orders: Substantial completion (days or date): _____ Ready for final payment (days or date): _____

RECOMMENDED:	ACCEPTED:	ACCEPTED:
By: _____	By: _____	By: _____
Engineer (Authorized Signature)	Owner (Authorized Signature)	Contractor (Authorized
Date: _____	Date: _____	Date: _____

Approved by Funding Agency (if applicable):

_____ Date: _____

Change Order

Instructions

A. GENERAL INFORMATION

This document was developed to provide a uniform format for handling contract changes that affect the Agreement, Contract Price or Contract Times. To be binding on Owner, any changes to the Agreement of any kind, whether that have been initiated by a Work Change Directive, Field Order or otherwise, must be incorporated into a written Change Order signed by the Owner.

Changes, including without limitation those that affect Contract Price or Contract Times, should be promptly covered by a Change Order. The practice of accumulating Change Orders to reduce the administrative burden may lead to unnecessary disputes.

If Milestones have been listed in the Agreement, any effect of a Change Order thereon should be addressed.

For supplemental instructions and minor changes not involving a change in the Contract Price or Contract Times, a Field Order should be used.

B. COMPLETING THE CHANGE ORDER FORM

Engineer normally initiates the form, including a description of the changes involved and attachments based upon documents and proposals submitted by Contractor, or requests from Owner, or both.

Once Engineer has completed and signed the form, all copies should be sent to Contractor for approval. After approval by Contractor, the Change Order shall be sent to the Owner for approval in its sole discretion. Engineer should make distribution of executed copies after approval by both parties.

If a change only applies to price or to times, cross out the part of the tabulation that does not apply.

Exhibit G5

Field Order

No. _____

Date of Issuance: _____ Effective Date: _____

Project: Zion Crossroads Elevated Water Storage Tank	Owner: Fluvanna County	Owner's Contract No.:
Contract:		Date of Contract:
Contractor:		Engineer's Project No.: 50078862

Attention:
You are hereby directed to promptly execute this Field Order issued in accordance with General Conditions Paragraph 9.04.A, for minor changes in the Work without changes in Contract Price or Contract Times once approved by the Owner. If you consider that a change in Contract Price or Contract Times is required, please notify the Engineer immediately and before proceeding with this Work.

Reference: _____ _____
(Specification Section(s)) (Drawing(s) / Detail(s))

Description: _____

Attachments: _____

	Engineer:
Receipt Acknowledged by Contractor:	Date:

Owner Approval: _____
Date: _____

Exhibit G6

(Contractor Name)

(Contractor Address)
(Contractor Telephone)
FAX **(Contractor Fax)**

REQUEST FOR INFORMATION

Project No. _____

RFI No. _____
Date: _____

To:_____
From:_____
Project Name: _____
Contract No.:_____
Owner: _____
Subject: _____
Contract Drawing(s):_____
Specification Section: _____

Question:

_____
_____
_____
_____
_____
_____
_____

Contractor:
Signature _____ *Date*

Reply:

_____
_____
_____
_____
_____
_____
_____

Engineer/Architect:
Signature _____ *Date*
Cc: File

Exhibit H

TABLE OF CONTENTS
PROJECT MANUAL

ZION CROSSROADS
ELEVATED STORAGE TANK

TECHNICAL SPECIFICATIONS

Division 01 - General Requirements
Section 01010 – Summary of Work
Section 01013 – Mobilization
Section 01200 – Price and Payment Procedure
Section 01310 – Project Meetings
Section 01320 – Scheduling of Construction
Section 01330 – Submittal Procedures
Section 01400 – Testing and Special Inspections
Section 01500 – Temporary Facilities and Controls
Section 01730 – Operating and Maintenance Data
Section 01770 – Closeout Procedures

Division 02 – Site Work
Section 02100 – Site Preparation
Section 02110 – Clearing and Grubbing
Section 02120 – Erosion and Sediment Control
Section 02220 – Site Demolition
Section 02230 – Dewatering
Section 02300 – Earthwork
Section 02325 – Trenching and Backfilling
Section 02600 – Piping System Testing
Section 02798 – Utility Location and Identification
Section 02821 – Chain Link Fence and Gates
Section 02920 – Turf and Grasses

Division 03 – Concrete
Section 03240 – Adhesive Anchors
Section 03300 - Cast-In-Place Concrete
Section 03400 – Precast Concrete Structures
Section 03600 – Grout

Division 05 – Metals
Section 05520 - Aluminum Access Hatches
Section 05530 - Pipe Supports and Stands

Division 06 – Wood & Plastics
Section 06100 – Rough Carpentry

Division 09 – Finishes
Section 09900 - Piping and Equipment Coatings and Painting
Section 09920 – Coating for Steel Water Storage Tank

Division 11 – Equipment
Section 11100 – Process Piping
Section 11110 – Flow Measurement
Section 11150 – Valves, Hydrants, and Appurtenances
Section 11200 – Submersible Water Mixer
Section 11810 – Pipe Identification Markers
Section 11820 – Disinfection and Flushing of Water Tanks and Piping Systems

Division 13 – Special Construction
Section 13100 – Pedesphere Elevated Water Storage Tank

Division 16 – Electrical
Section 16010 – General Electrical Provisions
Section 16110 – Raceways
Section 16120 – Wiring
Section 16131 – Pull and Junction Boxes
Section 16132 – Pilot Devices
Section 16133 – Position Switches
Section 16134 – Switch and Outlet Boxes
Section 16470 – General Lighting and Distribution Panelboards
Section 16620 – Emergency Standby Power System

Appendices
Appendix A – Geotechnical Engineering Report
Zion Crossroads Water and Sewer System, Elevated Water Storage Tank, October 2017

Please also see "Zion Crossroads Elevated Water Storage Tank" drawings incorporated into this Project Manual by reference as material provisions hereof.

END OF SECTION TOC

BOS 2019-01-09 p.352/1491

SECTION 01010
SUMMARY OF WORK

PART 1- GENERAL

1.1 WORK COVERED BY CONTRACT DOCUMENTS

A. DESCRIPTION

1. Project: Construction shall consist of providing and installing a 500,000 gallon pedesphere elevated storage tank, and meter vault in Fluvanna County, VA.

2. All work shown on Drawings and/or called for in these Specifications shall be performed under the General Contract, unless specifically noted to the contrary in the Contract Documents. The Project includes, however is not limited to:

   a. Construction and installation of a 500,000 gallon pedesphere elevated storage tank.
      1) Tank shall have a flow through design with separate inlet and outlet riser pipes.
      2) A mixer to ensure complete tank mixing.
      3) Cathodic protection of the sacrificial anode design.
   b. Two (2) below grade meter vaults with strainer, check valve, flow meter, and motorized butterfly valve.
   c. Provide electrical service to elevated storage tank.
   d. Provide site improvements including a gravel site, fencing, and grading away from tank.

B. CONTRACTOR's Duties: CONTRACTOR'S duties in performance of the WORK shall include, however are not limited to:

1. Responsibilities: CONTRACTOR shall be:

   a. Responsible for the management of the Project.
   b. Responsible for hiring all subcontractors.
   c. The sole arbitrator of the division of WORK of all trades, associated with WORK provided for in the Contract Documents.

2. Work: Except as specifically noted, provide and pay for all:

   a. Labor, materials, and equipment.
   b. Tools, construction equipment and machinery.
   c. Water, heat, and utilities required for construction.
   d. Other facilities and services necessary for proper execution and completion of WORK.

3. Permits and Fees: Secure and pay for, as necessary for proper execution and completion of WORK, and as applicable at time of receipt of Bids:

a. Permits (including building and trade permits),
b. Government fees,
c. Bonds,
d. Licenses
e. Insurance.

4. Notices: Unless specifically indicated otherwise, give required Notices to ENGINEER, government agencies, (local, state and federal), utility companies, OWNER and others as required and within the time frames identified in the Contract Documents.

5. Regulations: Comply with all codes, ordinances, rules regulations, orders, and other legal requirements of public authorities which bear on performance of WORK.

6. Written Notice: Promptly submit Written Notice to ENGINEER of observed conflicts in Contract Documents. It is CONTRACTOR'S responsibility to make certain that all work performed as defined in the Drawings and Specifications comply with codes and regulations.

7. Coordinate: Coordinate WORK with appropriate authorities, *i.e.*, utility companies, Virginia Department of Health (VDH), and Virginia Department of Transportation (VDOT), etc, and other contractors who may be performing other work at the project site of this work or adjacent to this work.

1.2 ADDITIONAL ENGINEERING SERVICES

A. In the event that the ENGINEER is required to provide additional engineering services as a result of CONTRACTOR error or omissions; substitution of materials or equipment by the CONTRACTOR that are different from what is specified that results in change in dimensions, layout, power requirements, etc.; or if the ENGINEER is required to examine and evaluate any changes proposed by the CONTRACTOR for the convenience of the CONTRACTOR; or if the ENGINEER is required to witness retests of project components, then the ENGINEER's charges in connection with such additional services shall be charged to the CONTRACTOR by the ENGINEER.

1.3 AGREEMENT

A. Construct WORK under single, all-inclusive AGREEMENT.

1.4 PLANS AND SPECIFICATIONS

A. Plans and Specifications describe the scope of work for this project. Should there be a conflict between the drawings and specifications the more stringent shall apply.

1.5 LINES, GRADES, AND REFERENCE POINTS

A. Project Stakeout: Lines, grades, elevations, locations, pipe inverts and centerlines, and construction staking necessary for the proper execution of all the WORK specified here

in will be established by CONTRACTOR at his expense by a Professional Land Surveyor licensed in the Commonwealth of Virginia.

B. Where the ENGINEER deems that additional survey is required for the proper execution of the Work or verification that the Work was completed per Contract Document requirements, the CONTRACTOR at his expense shall provide this additional survey by a Professional Land Surveyor licensed in the Commonwealth of Virginia.

C. Project Control: Ground control and Field surveying has been established during design of the Project by ENGINEER. These points will be provided only one (1) time upon request. All existing grade stakes, reference lines, etc. destroyed by CONTRACTOR during the progress of its WORK will be replaced at CONTRACTOR'S expense.

D. Field Verification: Where called for on the Drawings and Specifications or, required for accuracy and fit with existing WORK, CONTRACTOR will make its own field measurements to verify any dimensions shown on the Drawings. Consequently, OWNER and ENGINEER present this information only as an approximation and not a guideline. CONTRACTOR shall be responsible for verification prior to submittal.

1.6 RESPONSIBILITY REGARDING EXISTING UTILITIES AND STRUCTURES

A. Tie-ins and Operation of OWNER's Equipment

1. CONTRACTOR shall not make any tie-ins to existing systems whether in service or not without pre-approval from the OWNER and without an OWNER's representative present. CONTRACTOR shall not operate any valves and/or equipment belonging to the OWNER.

B. Existing Structures: The existence and location of underground utilities indicated on the Drawings are not guaranteed and shall be investigated and verified in the field by CONTRACTOR before WORK is begun. Excavation in the vicinity of existing structures and utilities shall be carefully performed by hand if deemed appropriate by CONTRACTOR.

C. Responsibility: CONTRACTOR shall be held responsible for any damages to, and for maintenance and protection of, existing utilities and structures; and, for repair of such to the complete satisfaction of the respective owner(s).

D. Pre-Existing Conditions: For the protection of both itself and OWNER, CONTRACTOR shall make a survey of adjacent properties before commencing operations. Such a survey shall locate all existing cracks and damage to existing structures by means of drawings and photographs. "Tell tales" shall be placed as directed by ENGINEER. In addition, a videotape shall be made by the CONTRACTOR showing the entire project area prior to commencing work, with copies to be submitted to the ENGINEER and OWNER.

E. Documentation: A copy of this report shall be filed with ENGINEER. Any refusal of owner(s) of adjacent property to permit entry for purposes of inspection shall be noted in the report. The purpose of filing the report is to document the pre-existing conditions. Any liability resulting from this documentation as provided by the contract is solely the CONTRACTOR's responsibility.

F. Protection of the Work: CONTRACTOR shall continuously maintain adequate protection of all its WORK and materials from damage or theft and shall protect OWNER'S property and all adjacent property from injury or loss arising in connection with activities provided for this Project. CONTRACTOR shall be liable for any such damage, injury, or loss.

G. Protection of Adjacent Facilities: CONTRACTOR shall take, use, provide, and maintain all necessary precautions, safeguards, and protection to prevent accidents, or injury to persons or property on, about, or adjacent to the site of the WORK. CONTRACTOR shall post danger signs warning against any hazards created by the WORK being done under this CONTRACT. CONTRACTOR shall designate a responsible member of its organization to be responsible for the prevention of accidents on the Project. The name of this person so designated shall be reported in writing to ENGINEER. In an emergency affecting the safety of life, or of the WORK or adjoining property, CONTRACTOR, without special instructions or authorization from ENGINEER or OWNER, is hereby permitted to act, at its discretion, to prevent such threatened loss or injury. It must take such action if so instructed or authorized by ENGINEER or OWNER.

H. Requirements of Law: CONTRACTOR shall also protect adjacent property as required by law.

1.7 APPLICABLE CODES

A. Specified Codes: Whenever reference is made to the furnishing of materials or testing thereof to conform to the standards of any technical organization or body, it shall be construed to mean the latest standard, code, specification, or tentative specification adopted and published at the date of Advertisement for Bids, even if reference has been made to an earlier standard; and such standards are made a part thereof to the extent which is indicated or intended.

B. Non-Specified Codes: When no reference is made to a code, standard, or specification, the standard Specifications of the ASTM, the ASA, the AIEE, the AWWA, or the NEMA or others, as applicable, shall govern.

C. Permits: CONTRACTOR shall be responsible for compliance with all state and local codes and ordinances.

1.8 COORDINATION

A. All WORK shall be coordinated with the OWNER and individual property owners and business owners. At least 48 hours Notice will be given for any WORK involving an existing facility.

1.9 SEQUENCE OF WORK

A. All new lines and equipment shall be tested in accordance with the requirements in the Contract Documents prior to placing into service.

1.10 EQUIPMENT/MATERIAL GUARANTEE

CONTRACTOR shall furnish a written guarantee from the manufacturer of the equipment and material to ENGINEER at the time of completion of WORK and before acceptance of the installation. The guarantee does not apply to any item damaged from misuse, lack of maintenance, alternation, neglect, accident, or wear from normal use.

A. Initial Installation: All equipment/material installed per the Contract Documents shall be free from defect in material or workmanship, and CONTRACTOR shall repair or replace at its expense any such defective equipment for a period of 1 year from the date of Substantial Completion unless otherwise noted in the Contract Documents.

B. After Installation: CONTRACTOR shall be responsible for repair or replacement of any equipment or material which fails to meet the design requirements as specified which are revealed during fabrication, installation, demonstration and/or acceptance testing. Repair or replacement of any such equipment/material shall be completed within 60 days at the expense of CONTRACTOR. Liquidated Damages for failure to complete such repair or replacement within the specified time will be assessed in the manner specified in the General Conditions.

1.11 WORK OUTSIDE REGULAR HOURS

A. If the CONTRACTOR desires to perform work outside the regular hours or on Saturday, he shall request permission 48 hours in advance of the proposed work to allow arrangements to be made for proper inspection. The OWNER reserves the right to refuse, at his discretion, any work request outside the regular house or on a Saturday made by the CONTRACTOR. The OWNER may refuse the CONTRACTOR permission to work if the 48-hour notice is not given. Reasonable efforts shall be made by the CONTRACTOR to avoid undue noise during the night and on Sundays, if it is necessary to work at such times. Under normal circumstances the CONTRACTOR will not be permitted to work on Sundays.

B. Unless specifically scheduled to work outside normal hours by the OWNER in the interest of public safety or convenience, then the CONTRACTOR will be liable for the expense of overtime work required by OWNER's and/or ENGINEER's employees. This expense includes but is not limited to OWNER and ENGINEER called to the job site outside normal working hours to resolve problems directly related to the project. Normal or regular working hours are defined as 7:00 a.m. to 5:00 p.m. Monday through Friday.

C. IF CONTRACTOR anticipates working outside normal work hours, he shall notify the ENGINEER and OWNER as soon as possible, but in no circumstances less than 48 hours in advance.

1.12 MATERIAL SUBSTITUTIONS

A. The specifications and project drawings depict equipment and materials which are deemed most suitable for the service anticipated. It is not intended, however, to eliminate other products of equal quality and performance. The CONTRACTOR shall prepare his bid based on the specified equipment for purposes of determining low bid. Award of a contract shall constitute an obligation to furnish the specified equipment and materials.

B. After execution of the contract, the CONTRACTOR may offer substitutions to the specified equipment for consideration. The equipment proposed for substitution must be equal to or superior in construction and performance to that specified in the contract, and the quality must be demonstrated by a list of at least five (5) current users of the proposed equipment in similar installations in Virginia that have been in service for a minimum of five (5) years.

C. In event the CONTRACTOR obtains ENGINEER's approval for equipment substitution, the CONTRACTOR shall, at his own expense, make all resulting changes to any enclosures, buildings, piping or electrical systems as required to accommodate the proposed equipment. CONTRACTOR shall at his own expense provide detail drawings illustrating the substituted equipment to be submitted to the ENGINEER for approval prior to acceptance.

D. Should the substitution not be acceptable to the OWNER or ENGINEER, the CONTRACTOR shall resubmit the original equipment specified. The CONTRACTOR shall be responsible for all additional costs accrued by the ENGINEER and OWNER associated with any substitution.

E. If the cost to the CONTRACTOR is less for the proposed substitution, the saving shall be equably shared by the CONTRACTOR and the OWNER.

1.13 Storage

A. CONTRACTOR shall store all materials and equipment in accordance with all manufacturers' recommendations. CONTRACTOR shall include in his submittal package the manufacturers' recommended long term and short term storage procedures. Storage procedures shall extend to equipment installed but not put into service and shall continue until project completion.

PART 2- **PRODUCTS** (Not Applicable).

PART 3- **EXECUTION** (Not Applicable).

END OF SECTION

SECTION 01013
MOBILIZATION

PART 1- GENERAL

1.1 RELATED DOCUMENTS

A. Drawings and general provisions of Contract, including General and Supplementary Conditions, and other Division 1 Specifications Sections, apply to this Section.

1.2 DESCRIPTION

A. The work covered by this section consists of preparatory work and operation, including but not limited to those necessary for the movement of personnel, equipment, trailers, sanitary facilities, temporary electric supplies, and other facilities necessary for work on the project; video taping of job site; and for all other work and operations which must be performed or costs incurred prior to beginning work on the various items on the project site.

PART 2- PRODUCTS

2.1 VIDEO TAPE

A. High definition digital recording shall be used.

PART 3- EXECUTION

3.1 VIDEO TAPING

A. Format - The entire project site shall be video taped prior to beginning work and the video tape(s) provided to the OWNER's Representative. CONTRACTOR shall provide video camera and experienced cameraperson who shall walk the entire site. The taping shall be done on a sunny day to provide a clear video. Each taped segment shall begin with the cameraperson verbally noting "Project Name, Company, Camera person's Name, the Date, Time and Brief Description of Segment to be Taped". Each video tape shall be clearly labeled as to project name, date, and volume. Provide log of each video tape which will include footage milestones and segments covered in that volume.

B. Acceptance - Video tape(s) prepared by the CONTRACTOR shall be delivered to the OWNER's Representative at the preconstruction conference for review. Within seven (7) days of receipt the OWNER's Representative shall review tape to determine and notify the CONTRACTOR if the video is acceptable. Video tape(s) shall be acceptable prior to beginning work. Video recordings shall become the property of the OWNER.

END OF SECTION

SECTION 01200
PRICE AND PAYMENT PROCEDURES

PART 1- GENERAL

1.1 SCOPE

Under this section of the specifications, the CONTRACTOR shall furnish all necessary labor, machinery, apparatus, tools, materials, equipment, services, and other necessary supplies and perform all work including excavation and backfilling at the unit or lump sum prices for the following items.

PART 2- PRODUCTS

2.1 PAYMENT FOR STORED MATERIALS

A. Payment will be made for materials stored on-site in accordance with requirements of Contract Documents and for which a paid invoice or other proof of payment is provided.

B. All stored materials shall be stored in strict accordance with manufacturer's long term storage requirements. Contactor shall submit a maintenance schedule for stored materials to the ENGINEER for approval. Maintenance schedule shall be approved by the manufacturer in writing. No payment for stored material shall be made without the receipt of the above and approved by OWNER and/or ENGINEER.

C. The Maintenance schedule shall be strictly adhered to, witnessed by the OWNER's representative and documented as having been completed. Should the maintenance schedule not be adhered to, payment for additional stored materials shall be withheld from pay applications until the situation is corrected.

D. Payment for stored materials shall be subject to retainage.

2.2 ITEMS INCIDENTAL TO THE WORK

A. Any item not specifically referenced in the Bid Schedule but required by the plans and specifications shall be considered incidental to the work. The cost for these items shall be included in the most appropriate Bid Item.

2.3 BID FORM ITEMS

A. The bid price shall be for furnishing all products (excluding all other items listed below), and perform all labor and furnishing equipment to install and erect those products and that equipment, for the construction of the Work as shown and specified including all site work, piping, valving, electrical, mechanical, plumbing, building improvements, building additions, new buildings, concrete work, and all other work shown or specified.

B. The bid price will be based on furnishing equipment and materials in compliance with the specifications. Should the CONTRACTOR fail to provide a manufacturer of equipment

which complies with the specifications, the OWNER reserves the right to select approved specified equipment of his choice without an increase in the contract price.

C. The CONTRACTOR shall be solely responsible for ensuring that all equipment meets all requirements in the technical specifications. If, during shop drawing submittal review, it is found that a manufacturer does not meet the requirements of the technical specifications, the CONTRACTOR shall be responsible for all additional costs to remedy the situation without an increase in the contract price or schedule duration.

PART 3- EXECUTION

3.1 PAY ITEMS

A. The items listed herein before are the same items listed in the Bid herein before and constitute all of the pay items in this contract. Any other items of work listed in the Specifications, or shown on the Drawings, shall be considered incidental to the above items.

3.2 REQUIREMENTS FOR PARTIAL PAYMENTS

A. Partial Payment requests will be made on an approved form. The CONTRACTOR will attach copies of invoices for all materials included in the Payment Request. Payments will be made on all major items of materials stored on site; however, the OWNER will not pay for miscellaneous incidental materials stored on site, nor for any materials stored off site.

B. The effective date for Partial Payment shall be established during the Pre-Construction Conference. Requests for payment shall be evaluated on the basis of work completed as of the effective date, not on the basis of projected work completed.

C. Retainage for Partial Payments from the OWNER shall be in accordance with the General Conditions.

D. The work to be performed under the Contract will commence with the date established in the Notice to Proceed. Substantial Completion shall be achieved within the time period stated in the Bid Proposal.

E. Prior to the Pre-Construction Conference, the CONTRACTOR shall submit the following:

1. List of principal Subcontractors and Suppliers
2. Schedule of Values
3. Progress Schedule and first progress report
4. Schedule of Submittals and Shop Drawings
5. Copies of building permits, other required permits, and similar start-up authorization certifications

3.3 FINAL PAYMENT

A. Final Payment may be requested when the ENGINEER is satisfied and the following conditions have been fulfilled:

1. Complete close-out requirements shall be in accordance with Division 1.

2. Complete work listed as incomplete at time of Substantial Completion or otherwise assure OWNER of subsequent completion of individual incomplete items. Cost of uncompleted items required under the contract shall be assessed by the ENGINEER and an amount equal to double the estimated cost to complete the item(s) shall be withheld until the work is completed and approved by the ENGINEER.

3. Settle liens and other claims or assure OWNER of subsequent settlement. Execute and submit to ENGINEER for approval, five (5) copies each of Contractor's Affidavit of Payment of Debts and Claims and Contractor's Affidavit of Release of Liens.

4. Submit proof of payment on fees, taxes, and similar obligations.

5. Transfer operational, access, security, and similar provisions to OWNER and remove temporary facilities, tools, and similar items.

6. Obtain consent of surety for final payment. Execute and submit to ENGINEER for approval, five (5) copies of Consent of Surety to Final Payment.

END SECTION

SECTION 01310
PROJECT MEETINGS

PART 1 - GENERAL

1.1 RELATED DOCUMENTS

A. Drawings and general provisions of the Contract, including General and Supplementary Conditions and other Division 1 Specification Sections, apply to this Section.

B. Project meeting minutes will be taken and distributed by the Engineer.

1.2 SUMMARY

A. This Section specifies administrative and procedural requirements for project meetings, including, but not limited to, the following:

1. Preconstruction conferences.
2. Pre-installation conferences.
3. Progress meetings.
4. Coordination meetings.

B. Related Sections: The following Sections contain requirements that relate to this Section:

1. Division 1 Section "Submittals" for submitting the CONTRACTOR's Construction Schedule.

1.3 PRECONSTRUCTION CONFERENCE

CONTRACTOR shall schedule and hold the conference at the Project Site or another convenient location agreeable to OWNER and ENGINEER. Conduct the meeting to review responsibilities and personnel assignments.

A. Attendees: Authorized representatives of the OWNER, OWNER's Representative, ENGINEER, and other consultants; the CONTRACTOR and its superintendent; major subcontractors; manufacturers; suppliers; funding agency representatives; and other concerned parties shall attend the conference. All participants at the conference shall be familiar with the Project and authorized to conclude matters relating to the Work.

B. Agenda: Discuss items of significance that could affect progress, including the following:

1. Sign-in and agenda.

2. Introduction of official representatives.

3. Status of contract documents.

a. Contracts.
b. Notice to Proceed.

4. Contract time issues.

   a. Total contract time.
   b. Project schedule.

5. Contract price issues.

   a. Status of contract price.
   b. Schedule of values.
   c. Payment requests.
   d. Change in the work.

6. Submittals.

7. Responsibilities of each stakeholder.

   a. OWNER's representative.
   b. OWNER.
   c. CONTRACTOR.
   d. Funding Agency

8. Comments, questions, discussion points.

1.4 PRE-INSTALLATION CONFERENCES

A. Conduct a pre-installation conference at the Project Site before each construction activity that requires coordination with other construction. In addition to those listed below, any additionally required meetings will be determined during the preconstruction conference.

B. Pre-installation meetings shall consist of, but are not limited to, the following:

   1. Tank

C. Attendees: The Installer and representatives of manufacturers and fabricators involved in or affected by the installation, and its coordination or integration with other materials and installations that have preceded or will follow, shall attend the meeting. Advise the OWNER's Representative of scheduled meeting dates.

   1. Review the progress of other construction activities and preparations for the particular activity under consideration at each pre-installation conference, including requirements for the following:

      a. Sign-in sheet and agenda distribution.
      b. Review of minutes from the previous meeting.
      c. Status of contract time.
      d. Status of contract price.
      e. Status of submittals.
      f. Status of RFI's.
      g. Status of change orders.
      h. OWNER's concerns.

i. CONTRACTOR's concerns.
j. Engineer's concerns.
k. Schedule next meeting (as needed) and close.
l. Site visit.

2. Record significant discussions and agreements and disagreements of each conference, and the approved schedule. Promptly distribute the record of the meeting to everyone concerned, including the OWNER and the OWNER's Representative.

3. Do not proceed with the installation if the conference cannot be successfully concluded. Initiate whatever actions are necessary to resolve impediments to performance of Work and reconvene the conference at the earliest feasible date.

1.5 PROGRESS MEETINGS

Can be requested and coordinated by CONTRACTOR, OWNER, OWNER's Representative, or ENGINEER as the need arises. Otherwise:

A. Conduct progress meetings at the Project Site at regular intervals no greater than every 30 days. The OWNER and the OWNER's Representative and CONTRACTOR shall agree on the schedule for monthly meetings.

B. Attendees: In addition to the OWNER and the OWNER's Representative, each subcontractor, supplier, funding agency or other entity concerned with current progress or involved in planning, coordination, or performance of future activities shall be represented at these meetings. All participants at the conference shall be familiar with the Project and authorized to conclude matters relating to the Work.

C. Agenda: Review and correct or approve minutes of the previous progress meeting. Review other items of significance that could affect progress. Include topics for discussion as appropriate to the status of the Project.

1. CONTRACTOR's Construction Schedule: Review progress since the last meeting. Determine where each activity is in relation to the CONTRACTOR's Construction Schedule, whether on time or ahead or behind schedule. Determine how construction behind schedule will be expedited; secure commitments from parties involved to do so. Discuss whether schedule revisions are required to insure that current and subsequent activities will be completed within the Contract Time.

2. Review the present and future needs of each entity present, including the following:

a. Interface requirements.
b. Time.
c. Sequences.
d. Schedule
e. 30-day "Look Ahead"
f. Status of submittals.
g. Deliveries.

h. Off-site fabrication problems.
i. Access.
j. Site utilization.
k. Temporary facilities and services.
l. Hours of work.
m. Hazards and risks.
n. Housekeeping.
o. Quality and work standards.
p. Change Orders.
q. Documentation of information for payment requests.

D. Reporting: After each meeting, the ENGINEER will distribute minutes of the meeting to each party present and to parties who should have been present. Include a brief summary, in narrative form, of progress since the previous meeting and report.

1. Schedule Updating: Revise the CONTRACTOR's Construction Schedule after each progress meeting where revisions to the schedule have been made or recognized. Issue the revised schedule concurrently with the report of each meeting.

1.6 COORDINATION MEETINGS

A. Conduct project coordination meetings at regular intervals convenient for all parties involved. Project coordination meetings are in addition to specific meetings held for other purposes, such as regular progress meetings and special pre-installation meetings.

B. Request representation at each meeting by every party currently involved in coordination or planning for the construction activities involved.

C. Record meeting minutes and results, and distribute copies to everyone in attendance and to others affected by decisions or actions resulting from each meeting.

1.7 MEASUREMENT AND PAYMENT

A. Payment for work described in this section shall be based on the schedule of values and approved completion percentages of the various bid items for this project. No direct measurement shall be made.

PART 2 - PRODUCTS

Not Applicable.

PART 3 - EXECUTION

Not Applicable.

END OF SECTION

SECTION 01320
SCHEDULING OF CONSTRUCTION

PART 1 - GENERAL

1.1 SUMMARY

This Specification shall cover all work on the project including work on or at existing facilities which must remain in operation.

A. Intent: It shall be CONTRACTOR'S responsibility to propose a construction schedule to complete all work in the contract completion time noted in the Information for Bidders and as supplemented herein.

B. Existing Facility: It shall be CONTRACTOR'S responsibility to ensure that existing facilities remain in operation at all times during construction. The CONTRACTOR shall provide all necessary bypass pumping, temporary facilities, equipment, and utilities required to allow for uninterrupted operation of the existing facility during construction.

C. Use of Facility: OWNER shall have the right to the use of completed facilities as they become available, this shall not relieve CONTRACTOR of his responsibility to complete work on any such facilities.

D. Sequence of Construction: It shall be CONTRACTOR'S responsibility to sequence construction as needed to incorporate the Work into existing facilities without interrupting operation of the existing facility.

E. Schedule: The CONTRACTOR is responsible for the sequencing, scheduling and coordinating of the Work, for monitoring the progress of the Work, and for taking appropriate action to keep the Work on schedule. The CONTRACTOR shall prepare and submit a preliminary schedule for accomplishing the Work based upon the completion time stated in the Contract. A copy of the preliminary schedule will be available at the Pre-Construction Conference. A fully complete progress schedule for accomplishing the work must be submitted in like manner no later than thirty (30) days after signing the Contract. No progress payments will be made to the CONTRACTOR until after he has submitted a preliminary schedule which is acceptable to the OWNER. Neither the second progress payment nor any subsequent payment shall be made to the CONTRACTOR until he has submitted a fully complete and updated progress schedule.

F. Failure to provide a satisfactory preliminary or final schedule for accomplishing the Work within the time provided above shall be a breach of contract for which the OWNER may terminate the Contract in the manner provided in the General Conditions.

1. The schedule shall indicate the estimated starting and completion dates for each major element of the work. The actual progress of those elements of the work will be reported monthly at the time of submission of the request for payment. If any elements of the Work are behind schedule, regardless of whether they may prevent the Work from being completed on time, the CONTRACTOR must indicate in writing what measures he is taking and plans to take to bring each

such element back on schedule and to insure that the time of completion is not exceeded.

2. In the event the completion date indicated by the schedule exceeds the Contract completion date, the assumptions and time estimates used to develop the schedule and plan will be reviewed, changes made, and a new schedule developed. This procedure shall be repeated, as necessary, to provide a Plan and Schedule meeting the Contract completion date.

G. Project Control: The CONTRACTOR shall review progress no less than each month, but as often as necessary to properly manage the project and stay on schedule. The CONTRACTOR shall collect and preserve information on Change Orders, including extensions of time. The CONTRACTOR shall evaluate this information and update the schedule as necessary to finish within the contractually allowed time. The scheduled completion date shall be within the period of time allowed by the Contract for completion of construction, as amended by Change Order.

H. Progress Graph: A progress graph showing the work completed to date in comparison with the work scheduled for completion and the overall project work schedule shall be provided with each monthly request for payment. The form of the graph shall be approved by the Engineer and the OWNER; however, a bar graph/chart or a CPM schedule marked, colored or annotated to reflect the above will usually satisfy this requirement.

I. Progress Delay: Should any of the following conditions exist, the Engineer or OWNER may require the CONTRACTOR to prepare, at no extra cost to the OWNER, a plan of action and a recovery schedule for completing the Work by the contractual completion date. The plan of action and recovery schedule shall explain and display how the CONTRACTOR intends to regain compliance with the original schedule. The plan of action and recovery schedule, when required, shall be submitted and approved prior to submission of the next monthly request for payment.

1. Should the CONTRACTOR's monthly progress report indicate delays such that a recovery schedule is required.

2. Should the schedule show the CONTRACTOR to be thirty (30) or more days behind schedule at any time during construction up to thirty (30) days prior to the scheduled substantial completion date.

3. Should the CONTRACTOR request to make changes in the schedule which, in the opinion of the Engineer or the OWNER, are of a major nature.

J. The CONTRACTOR shall prepare a schedule satisfactory to the Engineer and the OWNER fixing the dates for the beginning and completion of the placing of orders for and the manufacture, the testing and the installation of materials, supplies and equipment, which schedule shall be subject to change from time to time in accordance with the progress of the work.

K. The CONTRACTOR shall plan on four (4) days each month during allowable work days where work on items on the critical path for the completion of the project will be delayed due to weather. The four (4) days per month shall be a cumulative amount that will apply

to each month of the project to Substantial Completion, resulting in a total number of weather days built into the construction timeline to be calculated as four (4) days per month multiplied by the number of days to Substantial Completion, divided by 30 calendar days per month. If the total number of weather days encountered through the duration of the project exceeds the allotted number of weather days as calculated above, then the CONTRACTOR may request for a time extension to the contract time. Request for time extensions due to abnormal weather will not be approved by the OWNER unless work on items on the critical path are impacted by weather that causes delays of more than four (4) days in a given month. A request for an extension in contract time for delays to work on items not on the critical path caused by weather will not be considered. It is the CONTRACTOR's responsibility to document the days where critical path work was impacted by weather, the critical path work that was impacted, and the nature of the delay caused by weather. Extensions in time requested due solely to high moisture content of soils from earlier precipitation events will only be considered if the CONTRACTOR is making reasonable efforts, as judged in the sole opinion of the ENGINEER, to dry soils. The CONTRACTOR shall make any request for an extension in contract time due to weather at the next progress meeting following the abnormal weather day(s). If a request is not made at a progress meeting, no extension in time for abnormal weather will be approved for the period of time since the last progress meeting. The CONTRACTOR shall be required to coordinate with the INSPECTOR to verify that weather had a negative impact and prohibited work within two (2) business days of the weather event; providing documentation that the weather event negatively impacted the critical path with be the sole responsibility of the CONTRACTOR.

1.2 RELATED SECTIONS

A. Intent: The provisions and intent of the AGREEMENT, including the General Conditions, Supplementary Conditions, and other requirements of the Contract Documents apply to the WORK as specified in this Section. WORK related to this Section is described throughout the Specifications.

1.3 SUBMITTALS

A. Project Schedule: CONTRACTOR will provide a tentative project schedule at the Pre-Construction Conference for discussion. Progress graphs and updated schedules shall be submitted as required.

B. Demolition and Plan: CONTRACTOR shall submit for ENGINEER'S and OWNER'S approval a demolition plan, if demolition is included in the project, including sequence of events to prevent disruption of the existing unit operation during construction.

C. Project Cost Breakdown: CONTRACTOR shall submit for ENGINEER'S and OWNER'S approval a tabulated cost breakdown of the project (Schedule of Values). The cost breakdown will be a format, using lump sum, units, unit pricing, etc. such that ENGINEER and OWNER will be able to assess the percentage of completion of the project and determine a prorated payment for work in place and materials on hand for each pay period. CONTRACTOR shall submit a draft of the cost breakdown at the Pre-Construction conference for discussion.

D. List of Shop Drawing Submittals: CONTRACTOR shall submit for ENGINEER'S and OWNER'S approval a list of Shop Drawing submittals for project at the Pre-Construction Conference. The submittals will be arranged by technical specification section.

PART 2 - PRODUCTS

Not Applicable.

PART 3 - EXECUTION

Not Applicable.

END OF SECTION

SECTION 01330
SUBMITTAL PROCEDURES

PART 1- GENERAL

1.1 GENERAL REQUIREMENTS

A. The CONTRACTOR shall provide samples and shop drawings for all materials and equipment furnished and installed under this contract as described in the specifications in accordance with the following requirements. When the Work of the Project is divided into separate Contracts, each Prime CONTRACTOR shall provide submittals directly to the ENGINEER. No materials shall be used in the work which do not equal the approved samples or shop drawings.

B. Transmit each item with a Submittal cover attached.

1. Number submittals by specification section and revision number (e.g. 01330-1 for initial submission of schedule of submittals.)
2. Submit only one item per transmittal cover.
3. CONTRACTOR shall identify all deviations from the Contract Documents by paragraph number, and provide an explanation/justification for deviation.
4. Incomplete submittals or submittals without identified deviations will be returned un-reviewed.

C. Materials or appliances requiring approval must not be fabricated or incorporated into the work until approval has been given. The approval or acceptance of samples shall not preclude the rejection of any material upon the discovery of defects prior to the final acceptance of the complete work.

D. After a material has been approved, no change in brand or manufacturer will be permitted unless satisfactory written evidence is presented to, and approved by the ENGINEER, that the manufacturer cannot make scheduled delivery of approved material, or that other conditions are apparent which indicate the approval of such substitute materials to be in the best interest of the OWNER.

E. Samples, shop drawings, material lists, manufacturers' literature, and other required information shall be submitted in sufficient time, and clearly marked, to permit proper consideration and action on same before any materials which such samples, shop drawings, and information represent are delivered to the site. The CONTRACTOR shall be held responsible for any delay in the progress of the Work which may be due to his failure to observe these requirements.

F. Shop drawings and samples shall be submitted to the ENGINEER in sufficient quantity to permit the ENGINEER to retain four (4) copies and return the number of copies required by the CONTRACTOR.

G. Any submittal which requires the selection of color by the ENGINEER shall be submitted such that all color selections can be made at the same time. Submittals shall be held by the CONTRACTOR for a single submittal of all items requiring color choice or

sufficient time will be allowed for the ENGINEER to receive all submittals to prepare a comprehensive color selection.

H. Shop drawings shall include installation instructions and long and short term storage requirements.

I. No payment shall be made for unapproved materials or equipment purchased or installed by the CONTRACTOR even if the materials or equipment meet all the requirements of the specifications and/or is the named product or equipment.

J. See General Conditions GC 6.17 for additional submittal requirements.

1.2 SAMPLES

A. Samples and mock-ups shall be submitted in duplicate except where a greater number is specifically required by the specifications.

B. Samples and manufacturers' literature shall be forwarded (prepaid) to ENGINEER's office accompanied with a transmittal letter containing the following information: name of project, contractor, description of product, manufacturer, model number, ASTM or Federal Specification number where applicable. Catalogs shall be marked to indicate specific items submitted for approval.

C. Samples which are rejected by the ENGINEER must be re-submitted as soon as possible after notification of rejection and shall be marked "Re-submitted Sample" in addition to other required information.

D. Engineer shall have the right to require submission of samples of any material or any material lists, whether or not particularly mentioned in the Specifications.

1.3 SHOP DRAWINGS

A. Submission of shop drawings shall comply with the following requirements:

1. The shop drawings shall be clearly marked and submitted sufficiently in advance of the work which they cover to afford ample time for checking, correcting, and rechecking if necessary. No claim for delay will be granted to the CONTRACTOR if caused by his failure to comply with the requirements of this Section.

2. Before submitting for approval, the CONTRACTOR shall check all shop drawings, including those submitted by subcontractors, for accuracy and to ascertain that all work contiguous with and having bearing on other work shown on the shop drawings is accurately drawn, and that the work shown is in conformity with the contract requirements.

3. Shop drawings submitted for approval shall bear the CONTRACTOR's stamp of approval as evidence that such drawings and details have been checked by the CONTRACTOR. The submission of shop drawings (in either the original submission or when resubmitted with corrections) constitutes evidence that the CONTRACTOR has checked all information therein, and that he accepts and is

willing to perform the work, as shown, in a workmanlike manner and in accordance with the best standard practices.

4. No claim for an extra shall be based on work shown on the shop drawings. Note: all claims for extra shall be submitted by procedures established elsewhere.

B. The CONTRACTOR's approval stamp shall contain the following statement:

"The equipment and material shown and marked in this submittal is that proposed to be incorporated into this Project, and has been checked for and is in compliance with the Contract Documents unless otherwise shown in bold face type or lettering and listed on a page or pages headed "DEPARTURES FROM CONTRACT DOCUMENTS," and can be installed in the allocated spaces.

Checked By: _____ *Date:* _____

The person signing the stamp shall be one designated in writing by the CONTRACTOR as having that authority. The signature shall be handwritten in ink. Stamped signatures are not acceptable.

1. The ENGINEER's approval of shop drawings and schedules shall not relieve the CONTRACTOR from responsibility for deviation from drawings and specifications. The ENGINEER's approval shall not relieve CONTRACTOR from responsibility for errors of any sort on shop drawings or schedules.

C. ENGINEER'S ACTION:

1. Review is only for conformance with the design concept of the project. Markings or comments do not relieve the CONTRACTOR from compliance with the contract documents nor allow departure therefrom. The CONTRACTOR remains responsible for details and accuracy, for confirming and correlating all quantities and dimensions, for selecting fabrication processes, for technique of assembly, for coordination of the work with all trades, and for performing this work in compliance with the contract documents.

2. Where action and return is required or requested, ENGINEER will review each submittal, mark with "Action".

3. Final Unrestricted Release: Work may proceed, provided it complies with Contract Documents, when submittal is returned with the following marking:

   "Reviewed No Exceptions"

4. Final-But-Restricted Release: Work may proceed, provided it complies with notations and corrections on submittal and with Contract Documents, when submittal is returned with the following marking:

   "Reviewed Exceptions Noted"

5. Returned for Re-submittal: Do not proceed with work. Revise submittal in accordance with notations thereon, and resubmit without delay to obtain a

different action marking. Do not allow submittals with the following marking (or unmarked submittals where a marking is required) to be used in connection with performance of the work:

"Revise and Resubmit"

6. Returned for Non-Compliance: Do not proceed with work. Product submitted does not comply with Contract Documents. Resubmit for product complying with the requirements of the Contract Documents. Do not allow submittals with the following marking to be used in connection with performance of the work:

"Not Approved" or "Rejected"

1.4 REQUESTS FOR INFORMATION

A. CONTRACTOR shall submit to ENGINEER and OWNER, in writing, any requests for information (RFI) on the form contained in the Project Manual.

B. ENGINEER and OWNER shall review RFI within 7 days and, once a response has been agreed upon, the ENGINEER shall respond to the RFI in writing to the CONTRACTOR.

C. If a question is not submitted to the ENGINEER and the OWNER in writing, than any response made by the ENGINEER or OWNER is not binding. Only written responses will have the authority to change and/or clarify the Contract Documents.

D. If the response to the RFI will require a change in the Contract Documents that results in a change to the Contract Time or Price, the CONTRACTOR shall follow those procedures as outlined in the Contract Documents for submission of a change request. Any change requests will be subject to review and approval from the ENGINEER and OWNER.

PART 2- PRODUCTS

Not Applicable

PART 3- EXECUTION

Not Applicable

END OF SECTION

SECTION 01400
TESTING AND SPECIAL INSPECTIONS

PART 1- GENERAL (NOT APPLICABLE)

PART 2- PRODUCTS (NOT APPLICABLE)

PART 3- EXECUTION

3.1 TESTING AND SPECIAL INSPECTIONS

A. All Special Inspections as required by the Fluvanna County Building Inspections Office will be the responsibility of the OWNER. A list of Special Inspections has been included as part of the Appendix of these documents.

B. Responsibility for testing and inspection of the water storage tank shall be in accordance with AWWA D100 as appropriate. If AWWA D100 requires that a test or inspection be completed but does not identify who is responsible for completing such test or inspection, the CONTRACTOR is responsible for completing. The OWNER will provide an inspector to perform the tests and inspections required to be performed by the OWNER. The OWNER's inspector may also complete other tests and inspections. CONTRACTOR shall coordinate his work with and cooperate with the OWNER's inspector.

C. All other testing, special inspections, sampling, etc. as required by these Contract Documents and necessary for the completion of the WORK will be the sole responsibility of and paid for by the CONTRACTOR.

D. This specification section supersedes any testing or inspection responsibilities outlined in other specification sections of these Contract Documents.

E. The CONTRACTOR shall submit copies of all test and inspection results to the ENGINEER and OWNER within 24 hours of receiving such information. If a failing result is received, the CONTRACTOR shall submit a subsequent test result or documentation showing how any deficiency was corrected.

END OF SECTION

SECTION 01500
TEMPORARY FACILITIES AND CONTROLS

PART 1 - GENERAL

1.1 SUMMARY

A. Refer to General Conditions for requirements for the CONTRACTOR to provide temporary facilities as required for performance of the Work and fulfillment of the Contract. This section specifies certain minimum temporary facilities to be provided by CONTRACTOR regardless of methods and means selected for performance of the Work. This section is not intended to limit the CONTRACTOR's provisions for temporary facilities nor does it assure compliance with local governing regulations. Use of alternate provisions for temporary facilities is the CONTRACTOR's option, subject to the ENGINEER's acceptance. Temporary facilities are defined to exclude tools and construction machines, testing, demolition, alterations, soil borings, mock-ups and similar items.

1.2 SEPARATE PRIME CONTRACTORS

A. The CONTRACTOR will be responsible for maintaining temporary facilities. The CONTRACTOR will be responsible for all temporary facilities described herein as part of this WORK.

B. The CONTRACTOR will be responsible for providing his own Field Office and Materials Storage.

C. Installation of temporary electrical and water service shall be provided by the CONTRACTOR.

1.3 RELATED SERVICES

A. Intent: The provisions and intent of the AGREEMENT, including the General Conditions, Supplementary Conditions, and other requirements of the Contract Documents apply to the WORK as specified in this Section. WORK related to this Section is described throughout the Specification.

PART 2 - PRODUCTS

2.1 MATERIALS STORAGE

A. Provide suitable and sufficient enclosed and covered spaces, with raised flooring, to protect materials and equipment subject to damage by weather or construction. Materials stored on site which have not been properly protected will not be acceptable for use in construction or approved for payment.

2.2 FENCING AND BARRICADES

A. Provide fences and barricades and protection devices sufficient to prevent injury to persons or damage to property in accordance with Safety Requirements of applicable standards, codes, ordinances, and insurance agencies.

B. Provide temporary walkways as necessary for safe, uninterrupted pedestrian traffic.

2.3 SCAFFOLDING AND SHORING

A. Provide scaffolding, ramps, runways, platforms, guards, rails, stairs, and ladders as necessary for this work.

B. Meet safety requirements of applicable Virginia and County standards, codes, and ordinances.

C. Provide lights and signs to prevent damage or injury.

D. Provide all shoring, bracing and sheeting as required for safety and proper execution of the Work. Remove when no longer required.

2.4 LIFTING AND HOISTING

A. Provide hoists, temporary elevators, lifts, cranes, and towers necessary for expediting the handling of materials.

2.5 TOILETS

A. Provide adequate and sanitary temporary outside toilet facilities for use of persons working at site. Provide toilet facilities with adequate light and ventilation and toilet tissue in suitable holder. Comply with applicable legal and health requirements. Toilet facilities shall be secluded from public observation and shall not create nor allow a public nuisance. Temporary sanitary facilities shall be removed upon completion of the work and the premises shall be left clean. Workmen shall not use permanent washroom facilities in existing facilities or new work except by written permission of the OWNER.

2.6 ELECTRICITY

A. Make arrangements for, and provide temporary equipment, poles, wiring, switches, and outlets necessary to provide an adequate supply of electricity for lighting and power for construction purposes. Cost of temporary service shall be borne by the CONTRACTOR.

B. The CONTRACTOR shall make arrangements for meter installation, service connections, and wiring to meet the requirements of the completed project.

2.7 WATER

A. Make arrangements for, and provide temporary equipment and piping necessary to provide an adequate supply of water for construction purposes. Cost shall be borne by the CONTRACTOR. CONTRACTOR shall be responsible for providing water for flushing and testing activities.

B. The CONTRACTOR shall make arrangements for main connection, and incoming pipes to meet requirements of the completed project.

2.8 HEAT

A. The CONTRACTOR shall provide temporary heat during the course of the project to provide protection for the workmen and all installed materials and equipment during cold weather. The technical specifications outline minimum temperatures required for various portions of the Work.

B. The CONTRACTOR shall pay for fuel and attendance of the permanent heating system for all heat during construction to maintain the integrity of the building and all installed equipment until the project is accepted by the OWNER as Substantially Complete.

C. Temporary Heating shall be of a type approved by the ENGINEER and complying with all applicable safety and fire code regulations.

2.9 PUMPING AND DRAINING

A. Provide pumping equipment to keep construction and storage areas free from standing water that could cause damage or that would interfere with the work.

2.10 ACCESS

A. The Project Site shall at all times be accessible for delivery of construction materials and equipment. Maintenance of access points and access roads, loading and unloading areas and directional signage shall be the responsibility of the CONTRACTOR.

B. Provide signage and barricades to clearly and safely direct pedestrian and construction traffic.

C. Any damage to existing paved surfaces, curbing, landscaping, etc. shall be restored or repaired by the CONTRACTOR.

D. Stabilize parking areas and access roads with a base of crushed stone as soon as practicable after finish grading.

2.11 FINISHES

A. The CONTRACTOR shall protect all finished surfaces, including the jambs and soffits of all openings used as passageways or through which materials are handled, against any possible damage resulting from the conduct of work by all trades.

B. All finished surfaces, including factory finished and job finished items, shall be clean and not marred upon delivery of the building to the OWNER. CONTRACTOR shall be responsible for its Subcontractors compliance with this section.

C. Protect all types of finished floor surfaces in traffic areas with plywood, planking, reinforced non-staining kraft paper, or other approved material.

2.12 FIRST AID FACILITIES AND ACCIDENTS

A. First Aid Facilities

1. The CONTRACTOR shall provide at the site, such reasonable equipment and facilities as are necessary to supply first aid to any of his personnel who may be injured in connection with the work.

B. Accident

1. The CONTRACTOR shall promptly report in writing to OWNER and ENGINEER all accidents whatsoever arising out of, or in connection with, the performance of the work, whether on or adjacent to the site, which cause death, personal injury or property damage, giving full details and statements of witnesses.

2. If death or serious injuries or serious damages are caused, following notification of the appropriate emergency services and agencies, the accident shall be reported immediately by telephone or messenger to both the OWNER and the ENGINEER.

3. If any claim is made by anyone against the CONTRACTOR or a subcontractor on account of any accidents, the CONTRACTOR shall promptly report the facts in writing to the OWNER and ENGINEER, giving full details of the claim.

2.13 BARRICADES, WARNING SIGNS AND LIGHTS

A. General

1. CONTRACTOR shall provide, erect and maintain as necessary, strong and suitable barricades, fencing, danger signs and warning lights and as may be required for the safety of all those employed in the work, visiting the construction site, and for the general public.

B. Accommodation of Traffic

1. All work in the VDOT right-of-way or local right-of-ways shall be done in accordance with VDOT regulations or local regulations.

2. During the progress of the work, streets, driveways, sidewalks, and crossings shall be kept open for the passage of traffic and pedestrians and shall not be unnecessarily obstructed unless authorized by the authority having jurisdiction over same. The CONTRACTOR shall take such measures at his own expense, as may be necessary to keep the street open for traffic, and shall give advance notice to the Fire and Police Departments of his proposed street operations.

3. Warning signs shall be provided along all highways while work is in progress; and where traffic direction is required flagmen shall be designated by the CONTRACTOR to direct traffic past the equipment, machinery, or construction operations. Barricades and lights shall be provided as required to protect traffic. Where trenches have been cut in road shoulders on which traffic may pass at

times, red flags and warning signs shall be placed at frequent intervals and maintained until the shoulder is safe for travel. The traveling public shall be warned of the construction with signing that is in accordance with VDOT policy.

4. The CONTRACTOR shall notify the VDOT five working days in advance of work in highway right-of-way, and shall fully cooperate with the Department.

5. The CONTRACTOR shall construct and maintain, without extra compensation, such adequate and proper bridges over excavations as may be necessary or directed for the purpose of accommodating pedestrians or vehicles.

6. All temporary means constructed by the CONTRACTOR for maintaining traffic shall be removed upon completion of the work unless otherwise specified by the ENGINEER and any damage done to public or private property shall be made good by the CONTRACTOR.

7. All dirt spilled from the CONTRACTOR's trucks on existing pavements over which it is hauled or which has otherwise been deposited thereon shall be removed by the CONTRACTOR at the end of the work day.

2.14 PUBLIC CONVENIENCE AND PROTECTION

A. During progress of the work, the convenience and protection of the public must be provided for, and interferences held to a minimum.

B. The CONTRACTOR shall, at all times, conduct the work in such a manner as to insure the least practicable obstruction to public travel. The convenience of the general public and of the residents along or adjacent to the area of the work shall be provided for in a satisfactory manner, consistent with the operation and local conditions. Road and streets must be kept open at all times or suitable detours provided. Access to fire hydrants and other fire extinguishing equipment shall be provided and maintained at all times.

C. When necessary, for the protection of the public, the CONTRACTOR shall provide watchmen and/or lights to burn between twilight and sunrise, and shall erect and maintain barriers and all other necessary protection around the work at his own expense. He shall also take other precautions as may be necessary to protect life, and property. The OWNER reserves the right to remedy any neglect on the part of the CONTRACTOR as regards to the protection of the work after twenty-four (24) hours notice in writing; and, in cases of emergency, the OWNER shall have the right to remedy any neglect without previous notice, and in either case deduct the cost of such remedy from money due the CONTRACTOR.

2.15 PERIODIC CLEAN UP; BASIC SITE RESTORATION

A. During construction, the CONTRACTOR shall regularly remove from the site of the work all accumulated debris and surplus materials of any kind which result from his operations. Unused equipment and tools shall be stored at the CONTRACTOR's yard or base of operations for the project.

B. When the work involves installation of sewers, drains, water mains, manholes, underground structures, or other disturbance of existing features in or across streets, rights-of-way, easements, or private property, the CONTRACTOR shall (as the work progresses) promptly

backfill, compact, grade, and otherwise restore the disturbed area to the basic condition which will permit resumption of pedestrian or vehicular traffic and any other critical activity or functions consistent with the original use of the land. All work within 500 feet of the forward progress shall be complete with the exception of testing. The CONTRACTORs forward progress is subject to being suspended if in the opinion of the ENGINEER the above requirement is not met. The requirements for temporary paving of streets, walks, and driveways are specified elsewhere. Unsightly mounds of earth, large stones, boulders, and debris shall be removed so that the site presents a neat appearance.

C. The CONTRACTOR shall perform the clean-up work on a regular basis and as frequently as ordered by the ENGINEER. Basic site restoration in a particular area shall be accomplished immediately following the installation or completion of the required facilities in that area. Furthermore such work shall also be accomplished, when ordered by the ENGINEER, if partially completed facilities must remain incomplete for some time period due to unforeseen circumstances.

D. Upon failure of the CONTRACTOR to perform periodic clean-up and basic restoration of the site to the ENGINEER's satisfaction, the OWNER may, upon five (5) days prior written notice to the CONTRACTOR, without prejudice to any other rights or remedies of the OWNER, cause such work for which the CONTRACTOR is responsible to be accomplished to the extent deemed necessary by the ENGINEER, and all costs resulting there-from shall be charged to the CONTRACTOR and deducted from the amounts of money that may be due him. The CONTRACTOR shall receive no consideration for time extension or compensation for production time lost while not in compliance with the requirements for clean up.

PART 3 - EXECUTION

3.1 GENERAL

A. Maintain all temporary facilities until the project has reached Substantial Completion and is accepted by the OWNER. Project sign(s) shall be maintained until Final Acceptance by the OWNER.

B. Provide sheds and covered spaces suitable for storage of materials and equipment requiring protection as approved by the ENGINEER.

C. Erect and maintain scaffolding, ramps, platforms, guards, rails, stairs, and ladders as necessary for this work to meet all applicable safety laws and ordinances.

D. Maintain safety lights, signage, and other safety provisions. Keep safety lights burning from dark to dusk.

E. Install lifting and hoisting equipment to meet all applicable safety requirements.

F. Maintain adequate toilet facilities and keep toilets in clean and sanitary condition.

G. Make arrangements and install temporary water, electric, and telephone service required for the project.

H. Maintain temporary heating system during cold weather to adequately protect the work in place or work being placed. Specific requirements for environmental conditions can be found in the technical sections of the Specifications.

I. Pump or drain water to keep work and storage area free from water which could interfere with the work, or could cause damage. Distribute discharge to prevent erosion.

J. Remove all temporary work at the completion of the project, unless directed otherwise by the ENGINEER.

K. Clean spaces that were occupied by temporary work. Periodically, and as directed by the ENGINEER, remove all debris and rubbish from the site.

3.2 PAYMENT

A. Work specified under this Section shall be included for payment in the CONTRACTOR's bid price for other Pay Items of this Contract. No specific payment will be made under this Section.

END OF SECTION

SECTION 01730
OPERATING AND MAINTENANCE DATA

PART 1- GENERAL

1.1 REQUIREMENTS

A. Operation and Maintenance manuals are required for all materials and equipment provided and installed in the project.

B. Prior to substantial completion, submit to ENGINEER for review and approval, six (6) copies of a loose-leaf type manual properly indexed and bound in hard back, three-ring D-binder(s) and one (1) PDF digital version that contains complete operation and maintenance instructions including but not limited to the following:

1. Nameplate data, model numbers and serial numbers for all equipment and motors. This information shall be summarized in the front of the Manual for all of the equipment in the manual. This information shall be tabbed and included in the table of contents.

2. The three ring binder shall be provided with cover and spline inserts for equipment identification. The cover and spline identification inserts shall at minimum include equipment name, manufacturer name, project name, ENGINEER, OWNER, specification section and any additional pertinent information.

3. Names, phone numbers and company address of local representatives for all of the equipment included in the Manual. This information shall be summarized in the front of the Manual for all of the equipment in the manual. This information shall be tabbed and included in the table of contents.

4. Equipment warranties;

5. Operating and maintenance data;

6. Troubleshooting information and procedures;

7. Lubrication information and schedules;

8. Preventative Maintenance information and schedules;

9. Wiring diagrams;

10. Assembly drawings with part numbers;

11. Approved shop drawings, plan elevation and section drawings showing all details as equipment has been installed.

12. All appurtenances provided with equipment including pipe, valves, fittings, supports and brackets;

13. All electrical components, control panels, switches, floats, electronic components, relays, sensors, starters, contactors and enclosures
14. Names, telephone numbers, and addresses of applicable subcontractors, equipment and service suppliers and manufacturers;
15. Adequate information to satisfy State regulatory agency requirements; and,
16. Any other information concerning operation or maintenance of equipment readily available to CONTRACTOR and as required to repair and order parts.

C. At a minimum, operating and maintenance data shall be supplied for the following equipment:

1. Control Systems (including dialer, etc.);
2. Process equipment and devices
3. Pumps;
4. Electrical Devices
5. Generator Set (including transfer switch);
6. Control Valves (check, pressure reducing/sustaining, etc.);
7. Pipe valves and fittings;
8. Instrumentation
9. SCADA systems
10. Flow measuring devices;
11. Pressure measuring devices;
12. Sensors
13. Unit Heaters;
14. Lighting
15. Air Handling Equipment
16. Electrical switch gear

PART 2- PRODUCTS Not USED

PART 3- EXECUTION

3.1 Information included in the O & M Manual shall be specific to the equipment or item installed. Data sheets that include information not pertinent to the specific equipment or product should be omitted. Where data sheets have multiple information all non pertinent information shall be edited out and pertinent information shall be highlighted to make it clear which information applies.

3.2 Drawings shall be provided which clearly indicate the item and the installation. These should include plan views, elevation views and section views as required. Drawings should be scaled and dimensioned. Drawings from the approved submittals should be included and corrected if required to indicate the "as-built" condition.

3.3 Information shall include serial numbers, order numbers, dates, contact information or other pertinent information that are required to trace a piece of equipment back to the manufacturer.

END OF SECTION

SECTION 01770
CLOSEOUT PROCEDURES

PART 1- GENERAL

1.1 SUMMARY

A. This Section provides for the orderly and efficient transfer of the WORK from the CONTRACTOR to OWNER.

1.2 RELATED SECTIONS

A. The provisions and intent of the AGREEMENT, including the General Conditions, Supplementary Conditions, and other requirements of the Contract Documents apply to the WORK as specified in this Section. WORK related to this Section is described throughout the Specifications.

1.3 SUBMITTALS

A. Guarantees/Warranties: Four (4) copies of all guarantees, warranties and bonds called for in these Specifications commencing on the date of Substantial Completion.

B. Governmental Compliance: Provide evidence of compliance with requirements of governmental agencies having jurisdiction, but not necessarily limited to:

1. Certificates of Inspection
2. Certificates of Occupancy
3. Certificate to Operate

C. Affidavit of Payment of Claims: Provide evidence of payment and release of liens.

D. Affidavit of Release of Liens

E. Consent of Surety for Final Payment.

F. Contractor's Certification of Completion.

G. Final Pay Application

H. List of Project Participants: Provide a list of subcontractors, service organizations, and principal vendors, including names, addresses, and telephone numbers where they can be reached for emergency service at all times including nights, weekends, and holidays.

1.4 WARRANTEES AND GUARANTEES

A. Contractor shall provide Warrantees and Guarantees on all materials, equipment, workmanship, installations, labor and operation items provided and /or installed by the Contractor or any of its subcontractors and /or suppliers.

B. Warrantees and Guarantees shall be for a period of one year after:

1. Being placed in service by owner for the owners use before substantial completion of the project.

2. Date of substantial completion of the project.

3. Being installed and put in service after substantial completion of the project.

4. Equipment installed does not constitute being "in service".

C. Guarantee: CONTRACTOR warrants the equipment and/or materials delivered and installed under the AGREEMENT are free from defects in design, material or workmanship, and against damage caused prior to final inspection.

D. Prompt Repair: CONTRACTOR shall promptly repair or replace all defective or damaged items delivered under the AGREEMENT. CONTRACTOR may elect to have any replaced item returned to its plant at its sole expense.

E. Owner's Option: In the event of equipment and/or materials failure, during such time or in such a location that immediate repairs are mandatory, CONTRACTOR shall respond promptly, regardless of time. If CONTRACTOR is not available, OWNER personnel or other contractors, secured by OWNER, will affect repairs. CONTRACTOR shall then reimburse OWNER for parts and labor and/or other contractors costs necessary to correct deficiencies as defined within the warranty clause and time.

F. This specification shall apply to all sections of the specifications as applicable whether mentioned in a specific specification or not. Should the specific specification section have additional requirements or more stringent requirements that this section the more stringent shall apply.

G. The warranty shall not cover any item that has been subjected to external damage, disassembled and/or repaired by unauthorized persons, flooded or otherwise mistreated. Items normally consumed in service such as grease, oil, v-belts, fuses, filters, seals, etc., shall not be warranted.

PART 2- PRODUCTS

2.1 SUBSTANTIAL COMPLETION

A. Record Drawings: The CONTRACTOR shall maintain an accurate set of Record Drawings and Specifications. Prior to Substantial Completion CONTRACTOR shall prepare marked prints showing the installed locations and sizes of all underground or concealed portions of the WORK that are different from those shown in the Contract Documents. These Drawings shall be based on the set kept at the Project site and shall also show any other changes made to the Project during construction. These Drawings shall be submitted to ENGINEER at completion of the WORK.

Record drawing information shall include the following as a minimum, where applicable:

1. Size, horizontal and vertical location of any existing utilities uncovered during the course of the work. This shall include telephone cables and conduits, fiber-

optic cables and conduits, television cables, electrical cables and conduits, gas lines, water lines, sewer force mains, sanitary sewers, storm sewers, and the like.

2. Horizontal and vertical location of all water lines, sewer mains and force mains installed at every 100 foot station.

3. Location of all cleanouts new and existing, size of service lines installed, and the like.

4. Northing and Easting of all surface fixtures, i.e. valve boxes, manholes, etc.

5. Location of lines plugged or capped.

6. Swing ties to all structures installed such as manholes, air vents, hydrants, valve boxes, blowoffs, cleanouts, and the like.

7. Depth from rim of valve box to top of operating nut on all valves, and length of valve extensions installed.

8. Sizes and types of materials used and changes in sizes and types of materials. Rims and inverts of all manholes installed or tied into shall be provided.

9. Location of all sleeves, bends, and other fittings including method of restraint used; for example, thrust block, retainer glands, tie rods, and the like.

10. The Record Documents are a specific contract requirement of the Contractor. Final payment will not be issued until said documents have been submitted to the Engineer in an acceptable form.

B. Owner's Manuals: Not Applicable.

2.2 WARRANTIES

A. Four (4) copies of all warranties shall be submitted prior to substantial completion.

2.3 TRAINING

A. CONTACTOR shall provide a written schedule of all training that will be provided to the OWNER to be reviewed and approved, a minimum of 1 month before the first scheduled training session.

B. Training shall consist of, at a minimum, the level of training as recommended by the manufacturers of the equipment to be installed.

C. CONTRACTOR shall give the OWNER at least 2 weeks advance notice of each anticipated training session to allow for proper personnel to be present at the training.

D. The OWNER reserves the right to request specific training on equipment as he deems necessary for the successful transfer of ownership of the equipment from the CONTRACTOR to the OWNER.

E. All training shall be completed prior to issuance of Substantial Completion.

PART 3- EXECUTION

3.1 SUBSTANTIAL COMPLETION PROCEDURES

A. Owner's Use: The following procedures are to be applied towards OWNER'S utilizing the Project:

1. Initial Punch List: Within a reasonable time after receipt from CONTRACTOR of a comprehensive list of items which need to be completed or corrected, the ENGINEER will determine status of completion.

2. Incomplete Work: Should ENGINEER determine that the WORK is not substantially complete:

   a. Notification: ENGINEER will promptly so notify CONTRACTOR, in writing, given the reasons therefore. Contractor Remedy: CONTRACTOR shall promptly remedy the deficiencies and notify ENGINEER when ready for inspection.
   b. Additional Cost: The cost of re-inspection for Substantial Completion will be borne by CONTRACTOR.

3. Completed Work: When ENGINEER concurs that the WORK is substantially complete:

   a. Engineer's Acceptance: ENGINEER will submit the Certificate to OWNER and to CONTRACTOR for their written acceptance of the responsibilities assigned to them in the Certificate.

4. Occupancy: Upon Substantial Completion, CONTRACTOR shall obtain a temporary Certificate of Occupancy or other permission from the inspecting authority for OWNER to begin moving in its equipment and furnishings.

3.2 INSTRUCTIONS TO OWNER

A. Operation and Maintenance: CONTRACTOR shall instruct OWNER or its authorized representative in the proper operation and maintenance of all elements of the Project systems as specified.

3.3 CLEAN-UP/RESTORATION

A. Definition: Except as otherwise specifically provided, "clean" (for the purpose of this Section) shall be interpreted as meaning the level of cleanliness generally provided by VDOT roadway construction projects.

B. General: Prior to completion of the WORK, remove from the job site all tools, surplus materials, equipment, scrap, debris, and waste. Conduct final progress cleaning as described above. Restore all disturbed areas to a condition equal to or better than that prior to construction.

C. Site: Unless otherwise specifically directed by ENGINEER, hose down all paved areas on the site. Completely remove all resultant debris.

D. Structure: Not Applicable.

E. Timing: Schedule final cleaning as approved by ENGINEER, to enable OWNER to receive a completely clean Project.

3.4 FINAL COMPLETION

A. Notification: Prepare and submit to ENGINEER a written notice that the Project is complete and ready for final inspection and acceptance.

B. Releases/Consent of Surety: Contractor shall forward a completed "Release of Liens", "Release and Waiver of Debts and Claims" and "Consent of Surety" to ENGINEER prior to Final Payment.

C. Verification: CONTRACTOR shall provide written documentation that the CONTRACTOR has verified that all work has been completed prior to notifying the ENGINEER of such. ENGINEER shall verify that Work is complete prior to Final Payment.

D. Certification: CONTRACTOR shall certify that:

1. Review: Contract Documents have been reviewed

2. Inspection: WORK has been inspected for compliance with the Contract Documents.

3. Completeness: WORK has been completed in accordance with the Contract Documents.

4. Testing: Equipment and systems have been tested as required, and are operational.

5. Final Inspection: WORK is completed and ready for final inspection.

E. Incomplete Determination: Should ENGINEER determine that the WORK is incomplete or defective:

1. Notification: ENGINEER will promptly so notify CONTRACTOR, in writing, listing the incomplete or defective WORK.

2. Contractor Remedy: CONTRACTOR shall remedy the deficiencies promptly, and notify ENGINEER when ready for inspection.

3. Additional Cost: The cost of re-inspection for Final Completion will be borne by CONTRACTOR.

F. Acceptance: When ENGINEER determines that the WORK is acceptable under the Contract Documents, it will request the final Application for Payment from CONTRACTOR.

G. Reimbursement: CONTRACTOR shall reimburse OWNER for all trips to the Project site by ENGINEER after Substantial Completion in excess of two (2) trips if such excess trips are necessitated due to the Project's remaining incomplete.

H. Retainage: Retainage will be released per the provisions of the Contract Documents.

3.5 FINAL PAYMENT

A. Application: Submit a final Application for Payment to ENGINEER, showing all adjustments to the agreed to sum.

B. Change Order: If so required, ENGINEER will prepare a final Change Order showing adjustments to the AGREEMENT which were not made previously by Change Orders.

END OF SECTION 01770

SECTION 02100
SITE PREPARATION

PART 1- GENERAL

1.1 SCOPE

A. The CONTRACTOR shall be responsible for preparation of the site for construction of the project in accordance with the Contract Documents and as specified herein.

PART 2- PRODUCTS

Not Applicable

PART 3- EXECUTION

3.1 STAKING AND LAYOUT OF WORK

A. The CONTRACTOR shall locate bench marks, monuments, base lines, reference lines, and other reference points for the staking and layout of the WORK. Locations of bench marks, base line control points, and other reference points which were established during design of the project by the ENGINEER will be made available to the CONTRACTOR one time only upon request without charge. The CONTRACTOR shall complete the layout of the WORK and shall be responsible for all measurements that may be required for the execution of the WORK, to the location and limits that may be required for the execution of the WORK, to the location and limit marks prescribed in the Contract Documents, subject to such modifications as the ENGINEER may require to meet changed conditions in the contract WORK. All WORK under this contract shall be done to the lines and grades shown on the Contract Drawings.

B. The CONTRACTOR shall furnish competent men, tools, stakes, and other material as required, without charge, for properly staking out the WORK. He shall furnish the ENGINEER with one (1) copy of all field notes of such surveys. Final "cut" sheets/grade sheet shall be provided to the ENGINEER and OWNER. All staking and layout shall be performed under the supervision of a surveyor licensed in the Commonwealth of Virginia.

C. It shall be the duty of the CONTRACTOR and his employees to call to the attention of the ENGINEER any reference lines or points, or any bench marks which may have been disturbed or which seem to be off line or grade.

D. Where called for in the Contract Documents or required for accuracy and fit with existing WORK, the CONTRACTOR will make his own field measurements to verify any dimensions shown on the Contract Drawings.

3.2 PROTECTION OF EXISTING PROPERTY IRONS AND MONUMENTS

A. The CONTRACTOR shall use care in protecting existing property irons and monuments adjacent to his working area. If a property iron or monument must be removed to install new

facilities, the CONTRACTOR shall be responsible for locating the iron or monument in such a manner that it can be accurately replaced after construction of the new facilities by a properly registered surveyor. If a property iron or monument is destroyed because of neglect on the part of the CONTRACTOR, it shall be replaced at his expense by a properly registered surveyor.

3.3 RIGHT-OF-WAYS AND LIMITS OF CONSTRUCTION

A. The CONTRACTOR shall confine his construction operations to the immediate vicinity of the location shown on the Contract Drawings and in no case shall he encroach beyond the limits of the OWNER'S property, easements, or rights-of-way. He shall place materials, equipment, supplies, etc. so as to cause the least possible damage to property and interference with traffic. His method of operation and placing of equipment and materials shall be subject to the review of the ENGINEER.

B. It shall be the duty of the CONTRACTOR to locate the limits of the rights-of-way, easements, and/or property lines, prior to beginning construction. He shall be solely responsible for damage to trees, crops or other property outside the boundaries of the rights-of-way and easements and shall make satisfactory settlement for any damage directly with the property OWNER involved.

C. Where timber is located within the limits of construction and inside the easements on the property or rights-of-way, the CONTRACTOR shall preserve and protect from damage all trees that do not directly interfere with the prosecution of the WORK. The CONTRACTOR shall not cut any tree greater in diameter than six (6) inches and located more than eight (8) feet from the centerline of ditch or structure without first consulting the ENGINEER.

D. Where shrubbery or grass is located on the construction rights-of-way and easements, the CONTRACTOR shall be fully responsible for any damage thereto. He shall remove, protect and replant all shrubbery to the full satisfaction of the ENGINEER, OWNER, and property OWNER and shall either remove and resod or replant all lawns or pasture grass damaged by the construction WORK. Topsoil shall be replaced and grass of the same type found shall be planted, fertilized, mulched and watered in accordance with the Specifications, until a satisfactory stand of grass is secured. Unless otherwise notified, all timber located on rights-of-way and easements is the property of the land OWNER, and the land OWNER must be given a reasonable amount of notice and time by the CONTRACTOR to remove any timber. Prior to removing any timber the land OWNER and the OWNER must be notified by the CONTRACTOR.

E. Construction Rights-of-Way shall be defined as the designated property, easements, and public rights-of-way which comprise the work area for the project.

F. Excavation, grading, fill, storm drainage, paving and any other construction or installations in rights-of-ways of streets, highways, public carrier lines, utility lines (either aerial, surface or subsurface), etc., shall be done in accordance with requirements of the authorities having jurisdiction and of applicable requirements of these Specifications. CONTRACTOR shall make all necessary arrangements with the proper authorities, including the obtaining of permits, approval of construction methods, etc., and shall pay all costs charged in connection with the WORK.

3.4 PROTECTION OF PROPERTY AND EXISTING UTILITIES AND STRUCTURES

A. CONTRACTOR shall be responsible for the preservation and protection of property adjacent to the WORK site against damage or injury as a result of his operations under this WORK. Any damage or injury occurring on account of any act, omission or neglect on the part of the CONTRACTOR shall be restored in a proper and satisfactory manner as determined by the ENGINEER and OWNER or replaced by and at the expense of the CONTRACTOR.

B. CONTRACTOR shall comply promptly with such safety regulations as may be prescribed by the ENGINEER, OWNER or the local, state and federal authorities having jurisdiction and shall when so directed, properly correct any unsafe conditions created by, or unsafe practices on the part of his employees. In the event of the CONTRACTOR's failure to comply, the ENGINEER or OWNER may take the necessary measures to correct the conditions or practices complained of, and all costs thereof will be deducted from any monies due the CONTRACTOR. Failure of the ENGINEER to direct the correction of unsafe conditions or practices shall not relieve the CONTRACTOR of his responsibility hereunder.

C. In the event of any claims for damage or alleged damage to property as a result of WORK under this WORK, the CONTRACTOR shall be responsible for all costs in connection with the settlement of or defense against such claims.

D. Where existing utilities and structures are indicated on the Drawings, it shall be understood that all of the existing utilities and structures affecting the WORK may not be shown and that the locations of those shown are approximate only. It shall be the responsibility of the CONTRACTOR to ascertain the actual extent and exact location of existing utilities and structures. In every instance the CONTRACTOR shall notify the proper authority having jurisdiction and obtain all necessary directions and approvals before performing any WORK in the vicinity of existing utilities.

E. The WORK shall be carried out in a manner to prevent disruption of existing services and to avoid damage to the existing utilities. Temporary connections shall be provided, as required, to ensure uninterruption of existing services. Any damage resulting from Construction of this WORK shall be repaired within 24 hours. The CONTRACTOR shall make these repairs at his own expense in a manner approved by the ENGINEER, and further, subject to the requirements of any authority having jurisdiction, that they perform their own repairs or have them done by others, the CONTRACTOR shall be responsible for all costs thereof.

F. Where excavations by the CONTRACTOR require any utility lines or appurtenant structure to be temporarily supported and otherwise protected during the construction WORK, such support and protection shall be provided by the CONTRACTOR. All such WORK shall be performed in a manner satisfactory to the ENGINEER and the respective authority having jurisdiction over such WORK. In the event the CONTRACTOR fails to provide proper support or protection to any existing utility, the ENGINEER may, at his direction, have the respective authority provide such support or protection as may be necessary to insure the safety of such utility, and the costs of such measures shall be paid by the CONTRACTOR.

3.5 OBSTRUCTIONS

A. The CONTRACTOR shall be responsible for removing and disposing of any obstructions or obstacles at the site of the WORK or along the right-of-way therefore, to the satisfaction of the ENGINEER. Minor obstruction shall be removed and properly disposed of or protected and re-erected to as good condition as found, at the same or adjacent locations, as directed by the ENGINEER.

3.6 FENCES

A. Fences at the site or along rights-of-way, which interfere with the construction operations, shall be maintained by the CONTRACTOR until completion of the WORK unless written permission is obtained from the OWNER thereof to leave the fence dismantled until construction is completed. He shall remove, rebuild and extend fences as necessary.

3.7 DEMOLITION

A. Demolition shall be as specified in Division 2.

END OF SECTION

SECTION 02110
CLEARING AND GRUBBING

PART 1 - GENERAL

1.1 SUMMARY

The CONTRACTOR shall be responsible for preparation of the site for construction of the project in accordance with the Contract Documents and as specified herein.

This section includes the following:

A. Protection of existing trees.
B. Removal of trees and other vegetation in the project area
C. Clearing and grubbing.

1.2 RELATED SECTIONS

Intent: The provisions and intent of the AGREEMENT, including the General Conditions, Supplementary Conditions, and other requirements of the Contract Documents apply to the WORK as specified in this Section. WORK related to this Section is described throughout the Specifications.

1.3 REFERENCES

Virginia "Erosion and Sediment Control Handbook", latest edition.

1.4 SUBMITTALS

A. Submittals shall be in accordance with Division 1.

B. Off-Site Borrow Areas: If applicable, provide written assurance to ENGINEER that CONTRACTOR has the right to excavate and remove off-site borrow materials for use at the site.

C. Erosion and Sediment Control: Submit and maintain on-site a copy of Erosion and Sediment Control permit issued by the local approving authority for both on-site and off-site operations. These permits are to be obtained by the CONTRACTOR.

1.5 DELIVERY, STORAGE AND HANDLING

Deliver materials to, store at the site, and handle in a manner which will maintain the materials in their original manufactured or fabricated condition until ready for use.

PART 2 - PRODUCTS

Not Applicable.

PART 3 - EXECUTION

3.1 TRAFFIC

Conduct site clearing operations to ensure minimum interference with roads, streets, walks, businesses, and other adjacent occupied or used facilities. Do not close or obstruct streets, walks or other occupied or used facilities without prior permission from ENGINEER, OWNER, DPW, VDOT, private business and/or property owners on which WORK is conducted, and/or authorities having jurisdiction.

3.2 PROTECTION

A. General: Provide temporary fences, barricades, coverings, or other protection to preserve existing items indicated to remain and to prevent injury or damage to persons or property. Provide protection for adjacent properties as required.

B. Existing Trees/Vegetation: Protect existing trees and other vegetation adjacent to the actual WORK area from physical damage by providing temporary guards as follows:

1. At a minimum, the limits of clearing shall be located outside the drip line of any tree to be retained and, in no case closer than 5 feet to the trunk of any tree.

2. Marking: Prior to construction and before the preconstruction conference, individual trees and stands of trees to be retained within the limits of clearing shall be marked at a height visible to equipment operators.

3. Equipment Operation and Storage: Heavy equipment, vehicular traffic, or stockpiles of any construction materials (including topsoil) shall not be permitted within the drip line of any tree to be retained. Trees being removed shall not be felled, pushed or pulled into trees being retained. Equipment operators shall not clean any part of their equipment by slamming it against the trunks of trees to be retained.

4. Storage and Disposal of Toxic Materials: No toxic materials shall be stored closer than 100 feet to the drip line of any trees to be retained. Paint, acid, nails, gypsum board, wire, chemicals, fuels, and lubricants shall not be disposed of in such a way as to injure vegetation.

5. Fencing and Armoring: Any device may be used which will effectively protect the roots, trunk and tops of trees retained on the site. However, trees to be retained within 40 feet of a proposed building or excavation shall be protected by fencing. Personnel must be instructed to honor protective devices. The devices described are suggested only, and are not intended to exclude the use of other devices which will protect the trees to be retained.

   a. Snow Fence - Standard 40-inch high snow fence shall be placed at the limits of clearing on standard steel posts set 6 feet apart.

   b. Board Fence - Board fencing consisting of 4-inch square posts set securely in the ground and protruding at least 4 feet above the ground shall be placed at

the limits of clearing with a minimum of two horizontal boards between posts. If it is not practical to erect a fence at the drip line, construct a triangular fence nearer the trunk. The limits of clearing will still be located at the drip line, since the root zone within the drip line will still require protection.

c. Cord Fence - Posts with a minimum size of 2 inches square or 2 inches in diameter set securely in the ground and protruding at least 4 feet above the ground shall be placed at the limits of clearing with two rows of cord 1/4-inch or thicker at least 2 feet apart running between posts with strips of colored surveyor's flagging tied securely to the string at intervals no greater than 3 feet.

d. Plastic Fencing - 40-inch high "international orange" plastic (polyethylene) web fencing secured to conventional metal "T" or "U" posts driven to a minimum depth of 18 inches on 6-foot minimum centers shall be installed at the limits of clearing. The fence should have the following minimum physical qualities:

Tensile yield:	Average 2,000 lbs. per 4-foot width (ASTM D638)
Ultimate tensile yield:	Average 2,900 lbs. per 4-foot width (ASTM D638)
Elongation at break (%):	Greater than 1000% (ASTM D638)
Chemical resistance:	Inert to most chemicals and acids

e. Additional Trees - Additional trees may be left standing as protection between the trunks of the trees to be retained and the limits of clearing. However, in order for this alternative to be used, the trunks of the trees in the buffer must be no more than 6 feet apart to prevent passage of equipment and material through the buffer. These additional trees shall be reexamined prior to the completion of construction and either be given sufficient treatment to ensure survival or be removed.

f. Trunk Armoring - As a last resort, a tree trunk can be armored with burlap wrapping and 2-inch studs wired vertically no more than 2 inches apart to a height of 5 feet encircling the trunk. If this alternative is used, the root zone within the drip line will still require protection. Nothing should ever be nailed to a tree.

g. Fencing and armoring devices shall be in place before any excavation or grading is begun, shall be kept in good repair for the duration of construction activities, and shall be the last items removed during the final cleanup after the completion of the project.

C. Roads and Walks: Keep roads and walks free of dirt and debris at all times.

D. Utility Lines: Protect existing utility lines from damage. Notify ENGINEER immediately of damage to or an encounter with unknown existing utility lines. CONTRACTOR shall be

responsible for the repairs of damage to existing utility lines that are indicated or made known to CONTRACTOR prior to start of clearing and grubbing operations. When utility lines which are to be removed are encountered within the area of operations, CONTRACTOR shall notify ENGINEER and OWNER and Utility Owner in ample time to minimize interruption of the service.

3.3 RESTORATION & REPAIR

A. General: Restore damaged items to condition existing prior to start of WORK.

B. Existing Trees/Vegetation: In spite of precautions, some damage to protected trees may occur. In such cases, the following maintenance guidelines should be followed:

1. Soil Aeration - If the soil has become compacted over the root zone of any tree, the ground shall be aerated by punching holes with an iron bar. The bar shall be driven 1-foot deep and then moved back and forth until the soil is loosened. This procedure shall be repeated every 18 inches until all of the compacted soil beneath the crown of the tree has been loosened.

2. Repair of Damage: Any damage to the crown, trunk, or root system of any tree retained on the site shall be repaired immediately.

a. Whenever major root or bark damage occurs, remove some foliage to reduce the demand for water and nutrients.

b. Damaged roots shall immediately be cut off cleanly inside the exposed or damaged area. Cut surfaces shall be painted with approved tree paint, and moist peat moss, burlap, or top-soil shall be spread over the exposed area.

c. To treat bark damage, carefully cut away all loosened bark back into the undamaged area, taper the cut at the top and bottom, and provide drainage at the base of the wound.

d. All tree limbs damaged during construction or removed for any other reason shall be cut off above the collar at the preceding branch junction.

e. Care for serious injuries shall be prescribed by a forester or a tree specialist at CONTRACTOR's expense.

3. Fertilization: Broadleaf trees that have been stressed or damaged shall receive a heavy application of fertilizer to aid their recovery.

a. Trees shall be fertilized in the late fall (after October 1) or the early spring (from the time frost is out of the ground until May 1). Fall applications are preferred, as the nutrients will be made available over a longer period of time.

b. Fertilizer shall be applied to the soil over the feeder roots (see Plate 3.38-9). In no case should it be applied closer than 3 feet to the trunk. The root system of

conifers extends some distance beyond the drip line. Increase the area to be fertilized by one fourth the area of the crown.

c. Fertilizer shall be applied using approved fertilization methods and equipment.

d. Formulations and application rates shall conform to the guidelines given in the following table:

Tree Type	Special Conditions	Application Rate & Method		Formulation
Broad-Leaf Deciduous	Greater than 6 inches dbh* except American Beeches and Crabapples	Normal	2-4 lbs. per inch dbh; broadcast	Commercial 10-8-6 or 10-6-4
		Grade Change	4-5 lbs. per inch dbh; broadcast	Commercial 10-6-4
	Smaller than 6 inches dbh, including all American Beeches and Crabapples	Normal	1-2 lbs. per inch dbh; broadcast	Commercial 10-8-6 or 10-6-4
		Grade Change	2-3 lbs. per inch dbh; broadcast	Commercial 10-6-4
Narrow-Leaf Evergreen	Greater than 6 inches dbh, located in groups	2-4 lbs. per 100 sf of bed area; broadcast		Commercial 10-6-4
	Greater than 6 inches dbh, single specimens in open area	2 lbs. per inch dbh; broadcast		Commercial 10-6-4
	Smaller than 6 inches dbh	5 lbs. per 100 sf of bed area; incorporated into soil		Tankage or Cottonseed Meal
Broad-Leaf Evergreen	Where nitrogen in soil is sufficient	Liberal quantities incorporated into soil and applied as mulch		Acid Peat Moss or Rotted Oak Leaf Mold
	Where additional nitrogen is necessary	Also add 5 lbs. per 100 sf of bed area incorporated into soil		Tankage or Cottonseed Meal
*dbh: Diameter at breast height (4.5 feet above ground level).				

e. Maintain a ground cover of organic mulch around trees that is adequate to prevent erosion, protect roots, and hold water.

3.4 EROSION/SEDIMENT CONTROL FOR OFFSITE BORROW AREAS

Provide appropriate erosion and sediment control measures for any off-site borrow areas in full compliance with the Virginia Erosion and Sediment Control Handbook and regulations of the local jurisdiction. CONTRACTOR shall be solely responsible for all borrow sites outside of the Project area.

3.5 CLEARING

Clearing shall consist of the felling, trimming, and cutting of trees into sections and the satisfactory disposal of the trees and other vegetation designated for removal, including downed timber, snags, brush, and rubbish occurring within the areas to be cleared. Cut off flush with or below the original ground surface trees, stumps, roots, brush, and other vegetation in areas to be cleared, except for trees and vegetation indicated or directed to be left standing.

3.6 TREE REMOVAL

Where indicated, remove designated trees and stumps and grub roots. A tree trimming permit shall be obtained from VDOT by CONTRACTOR to remove/trim any trees located within the VDOT right-of-way.

3.7 GRUBBING

Remove and dispose of roots larger than 3 inches in diameter, matted roots, and stumps from the indicated grubbing areas. Excavate this material together with logs, organic and metallic debris, brush, and refuse and remove to a depth of not less than 18 inches below the original soil surface in areas indicated to be grubbed and in areas indicated as construction areas for this Project. Fill depressions made by grubbing with suitable material and compact in accordance with the requirements of the Contract Documents to make the new surface conform with the existing adjacent surface of the ground.

3.8 DISPOSAL OF CLEARED AND GRUBBED MATERIALS

A. CONTRACTOR shall make available all Saleable Timber to the property owner of the area that was cleared and grubbed. Property owner shall have thirty (30) days to claim material. After thirty (30) days, CONTRACTOR shall be responsible for the disposal of said material.

B. Nonsalable Materials: Disposal shall be CONTRACTOR's responsibility.

3.9 STORING MATERIALS

Strip and stockpile topsoiling material and other cleared materials that will be reused in the WORK.

3.10 EXISTING IMPROVEMENTS/FACILITIES

Remove existing improvements, both above-grade and below-grade to extent indicated or as otherwise required to permit new construction and provide for proper disposal off-site. Existing improvements and facilities such as mailboxes, signs, ornamental or decorative items, etc. that require temporary removal to permit new construction shall be promptly replaced and/or restored to the location and condition prior to construction. Improvements and facilities that are damaged by the CONTRACTOR during the course of construction shall be promptly replaced at the CONTRACTOR'S expense.

3.11 SALVABLE ITEMS

If applicable, carefully remove items indicated to be salvaged, and store on OWNER's premises where indicated or directed.

3.12 FUGITIVE DUST

Control air pollution caused by dust and dirt; comply with governing regulations. Provide a water truck as required.

3.13 FILLING

Fill depressions and voids resulting from site clearing operations. Using satisfactory soil materials, place in maximum 6 inches deep horizontal layers and compact each layer to density of surrounding original

ground.

3.14 GRADING

Grade ground surface to conform to required contours and to provide positive surface drainage away from the WORK or borrow area.

3.15 DISPOSAL

Dispose of waste materials, including trash and debris, and excess topsoil, off-site at the CONTRACTOR'S expense.

3.16 BURNING

Burning of waste material on-site is prohibited for this project.

END OF SECTION

SECTION 02120
EROSION AND SEDIMENT CONTROL

PART 1- GENERAL

1.1 SUMMARY

A. This work shall be performed in accordance with the erosion and sediment control plan of the Construction Drawings and the details provided therein, and as described, detailed and required by the Virginia Erosion and Sediment Control Handbook, latest edition, and land disturbance permit. The land disturbance permit shall be obtained by the CONTRACTOR from Fluvanna County

The CONTRACTOR shall be responsible for providing an employee who will serve as the Responsible Land Disturber for the project. This person will be responsible for the erosion and sediment control plan and requirements for the project and shall be certified by the Virginia Department of Conservation and Recreation as a Responsible Land Disturber (RLD). The name of the CONTRACTOR's RLD and copy of his current certification shall be provided to the OWNER, ENGINEER, and Erosion and Sediment Control Plan Approving Authority.

B. The erosion and sediment control measures and devices shown on the Drawings and described herein have been reviewed and approved by the appropriate governing State and/or Local agencies. The CONTRACTOR is responsible for stabilizing all disturbed areas, fill slopes, borrow areas, etc. with whatever means necessary to ensure a dense, well vegetated ground cover. If the CONTRACTOR has not installed, repaired, or maintained these devices, or seeded disturbed areas at optimum dates, additional measures or devices may be required at no additional cost to the OWNER.

The CONTRACTOR's selected construction methods may require modifications to the erosion and sediment control measures shown on the Drawings. The CONTRACTOR is responsible for complying with the land disturbance permit and obtaining approval for any modifications to the approved Erosion and Sediment Control Plan.

1.2 RELATED SECTIONS

Intent: The provisions and intent of the AGREEMENT, including the General Conditions, Supplementary Conditions, and other requirements of the Contract Documents apply to the WORK as specified in this Section. WORK related to this Section is described throughout the Specifications.

1.3 REFERENCES

Virginia Erosion and Sediment Control Handbook

1.4 SUBMITTALS

A. Submittals shall be in accordance with Division 1.

B. Permanent Seed Mixture: Provide written notification as to the permanent seed mixture to be used.

C. Temporary Seed Mixture: Provide written notification as to the temporary seed mixture to be used.

D. Erosion and Sediment Control: Submit and maintain on-site a copy of the Erosion and Sediment Control permit issued by the local approving authority for both on-site and off-site operations.

E. Responsible Land Disturber: Copy of Certification to be submitted at the pre-construction meeting.

1.5 MAINTENANCE

A. Maintain all erosion and sediment control structures to be utilized during the life of the Project in compliance with the regulations of the Division of Soil and Water Conservation and the requirements of the County DPW until vegetative cover is acceptable to the Division's and DPW's field personnel and approval acceptance is received.

PART 2- PRODUCTS

2.1 PRODUCTS

A. All products shall comply with details shown on the Drawings and the requirements of the Virginia Erosion and Sediment Control Handbook, latest edition.

PART 3- EXECUTION

3.1 EROSION AND SEDIMENT CONTROL MEASURES

A. Sequencing: All WORK shall be performed to limit the area of disturbance necessary to install Erosion and Sediment control devices prior to conducting WORK.

B. Siltation and Erosion Control Measures: Inlet protection, slope protection, mat linings, ditch linings, diversion dikes, silt fence, construction entrances, temporary & permanent vegetation, sediment traps & ponds, diversion ditches and all other items for siltation and erosion control shall be constructed in the locations shown or designated on the plans in accordance with the details provided, or as directed by the ENGINEER or local E&S inspector.

1. The CONTRACTOR shall institute the erosion control program as part of clearing and grubbing, and prior to rough grading. The initial program shall include, but not be limited to, the installation of construction entrance, inlet protection, silt fence, as shown on the Drawings at the limits of clearing and grubbing where silt-carrying surface water runoff may be diverted and/or filtered prior to leaving the disturbed area.

2. All siltation and erosion control devices installed during the course of construction shall be maintained in proper working order at all times, and shall not be removed until final stabilization of all disturbed areas or at the direction of the ENGINEER or local regulating authority.

C. Temporary Seeding: All disturbed areas that have no construction activity in close proximity shall be temporarily seeded within 7 days of completion of the disturbing activities. Establish temporary cover for erosion control by seeding and/or mulching. This shall be accomplished as soon as rough grading work is done.

1. When construction schedule requires seeding outside of the appropriate seeding dates, temporary seeding shall be installed per the detailed seeding schedules on the Drawings. CONTRACTOR shall reseed at an appropriate time. All reseeding shall be at the CONTRACTOR's expense.

D. Steep Slopes: On all steep slopes, where erosion is probable, hydroseed areas as soon as possible in strict accordance with applicable provision, of Section 603, of the VDOT *Road and Bridge Specifications*. Maximum allowable slope to be seeded is 2:1.

E. Cleaning of Roads and Streets: The CONTRACTOR shall maintain a vehicle wash rack or gravel bed at all vehicle egress areas (construction entrance). All vehicles shall be thoroughly cleaned of mud and silt before leaving the construction site to avoid tracking mud and silt onto roads, streets, and highways. In the event that tracking does occur, the CONTRACTOR shall immediately clean the street or road of all debris, mud or silt and shall pay all damages resulting therefrom. A daily survey of the condition of the adjacent streets and roads shall be made and recorded in the field log.

F. Protection of Stormwater Systems: Stormwater structures which will receive runoff from the construction shall be protected from the buildup of mud or silt as detailed on the Drawings and shall be cleaned out as silt loading occurs and prior to end of construction.

G. Fines for Siltation and Erosion Control: Any fines that are assessed upon the CONTRACTOR or OWNER by the governing agency due to negligence of the CONTRACTOR shall be paid by the CONTRACTOR.

END OF SECTION

SECTION 02220
DEMOLITION

PART 1- GENERAL

1.1 SUMMARY

A. This Section includes but is not limited to the following:

1. Demolish and remove all structures, equipment, valves, piping, electrical equipment, conduit, wiring and all appurtenances as noted and as needed to facilitate construction of proposed work.

1.2 RELATED DOCUMENTS

A. Drawings and general provisions of the AGREEMENT, including General Conditions, Supplemental Conditions, and other requirements of the Contract Documents apply to the WORK as specified in this Section. WORK related to this Section is described throughout the Specifications.

1.3 DEFINITIONS

A. Remove: Detach items from existing construction and legally dispose of them off-site, unless indicated to be removed and salvaged or removed and reinstalled. Concrete structures shall be demolished 4 feet below grade, except where there is conflict and deeper removal is required, and weep holes shall be drilled through wall and floor. Provide fill material to existing or finished grade and grade surface to preclude ponding.

B. Existing to Remain: Existing items of construction that are not to be removed and that are not otherwise indicated to be removed, removed and salvaged, or removed and reinstalled.

C. Demolish: Demolished items shall be done away with completely and removed from the project site. Means and methods shall be at the discretion of the Contractor.

D. Salvage: Items to be salvaged shall be removed without destroying or causing damage to the item.

E. Abandoned: Items to be abandoned shall be left in place but taken out of service.

1.4 MATERIALS OWNERSHIP

A. Historic items, relics, and similar objects including, but not limited to, cornerstones and their contents, commemorative plaques and tablets, time capsule, and other items of interest or value to Owner that may be encountered during demolition remain Owner's property. Carefully remove and salvage each item or object in a manner to prevent damage and deliver promptly to Owner.

1. Other items of interest or value shall include but not be limited to:

a. Pipe, tubing, valves and fittings

b. All equipment
c. All electrical materials such as wire, conduit, panelboards, motor control centers, motors, starters, breakers, light fixtures, light poles, lamps etc.
d. All instrumentation
e. All miscellaneous metals such as handrails, supports, grating, ladders, stairs, hatches, beams, channels, angle iron etc.
f. All material handling equipment such as hoists, chain falls and, gantries.

2. Contractor shall base his bid on removing from the project site and disposing of all demolished and removed materials without any salvage value.

3. Contractor shall coordinate with Owner's Representative before demolition starts, to establish which items will be turned over to the Owner and special procedures for their removal and salvage.

4. Contractor shall deliver all salvaged items which the Owner wishes to keep to a location designated by the Owner's Representative.

5. Contractor shall remove all salvaged items to be turned over to the Owner in a clean condition. All items exposed to sewage or the sewage treatment process shall be disinfected with a 200 ppm chlorine solution and rinsed clean.

1.5 SUBMITTALS

A. Submittals shall be in accordance with Division 1.

B. Qualification Data for demolition firm.

C. Schedule of Demolition Activities: Indicate the following:

1. Detailed sequence of demolition and removal work, with starting and ending dates for each activity.
2. Coordination for shutoff, capping, and continuation of utility services.
3. Locations of proposed dust- and noise-control temporary partitions and means of egress.

D. Pre-demolition Photographs or Videotape: Show existing conditions of adjoining construction and site improvements, including finish surfaces that might be misconstrued as damage caused by demolition operations.

E. Retain record submittal below if applicable. Landfill records may be required by Owner when discarded demolished materials contain hazardous wastes.

1.6 QUALITY ASSURANCE

A. Demolition Firm Qualifications: An experienced firm that has specialized in demolition work similar in material and extent to that indicated for this Project.

B. Regulatory Requirements: Comply with governing EPA notification regulations before beginning demolition. Comply with hauling and disposal regulations of authorities having jurisdiction.

C. Standards: Comply with ANSI A10.6 and NFPA 241.

1.7 PROJECT CONDITIONS

A. Notify Owner's Representative of discrepancies between existing conditions and Drawings before proceeding with demolition.

B. Hazardous or Regulated Materials: It is not expected that hazardous or regulated materials will be encountered in the Work.

1. If materials suspected of containing hazardous or regulated materials are encountered, do not disturb; immediately notify Owner's Representative and Owner.

C. Storage or sale of removed items or materials on-site is not permitted.

D. Utility Service: Maintain existing utilities indicated to remain in service and protect them against damage during demolition operations.

E. Maintain fire-protection facilities in service during demolition operations.

PART 2- PRODUCTS

Not Applicable

PART 3- EXECUTION

3.1 EXAMINATION

A. Locate existing utilities and verify that utilities have been disconnected and capped.

B. Survey existing conditions and correlate with requirements indicated to determine extent of demolition required.

C. Inventory and record the condition of items to be removed and disposed of legally off-site and items to be removed and salvaged.

D. When unanticipated mechanical, electrical, or structural elements that conflict with intended function or design are encountered, investigate and measure the nature and extent of conflict. Promptly submit a written report to Owner's Representative.

E. Survey of Existing Conditions: Record existing conditions by use of measured drawings, preconstruction photographs, preconstruction videotapes, and templates.

F. Perform surveys as the Work progresses to detect hazards resulting from demolition activities.

3.2 UTILITY SERVICES AND MECHANICAL/ELECTRICAL SYSTEMS

A. Existing Services/Systems: Maintain services/systems indicated to remain and protect them against damage during demolition operations.

1. Comply with requirements for existing services/systems interruptions specified in Division 1.

B. Service/System Requirements: Locate, identify, disconnect, and seal or cap off indicated utility services and mechanical/electrical systems serving areas to be demolished.

1. Owner will arrange to shut off indicated services/systems under Owner's direct control when requested by Contractor in writing with a minimum 72 hour notice.

2. If services/systems are required to be removed, relocated, or abandoned, before proceeding with demolition provide temporary services/systems that bypass area of demolition and that maintain continuity of services/systems to other parts of building.

3. The Contractor is cautioned to exercise all care to ascertain if utility services are active (live) or abandoned. Should any utility service not be cut off, capped, or disconnected, the Contractor shall not disturb the same and shall contact the utility company immediately for disconnection.

3.3 PREPARATION

A. Site Access and Temporary Controls: Conduct demolition and debris-removal operations to ensure minimum interference with roads, streets, walks, walkways, and other adjacent occupied and used facilities.

B. Temporary Facilities: Provide temporary barricades and other protection required to prevent injury to people and damage to adjacent buildings and facilities to remain.

1. Provide protection to ensure safe passage of people around demolition area and to and from occupied portions of building.

C. Temporary Shoring: Provide and maintain shoring, bracing, and structural supports as required to preserve stability and prevent movement, settlement, or collapse of construction and finishes to remain, and to prevent unexpected or uncontrolled movement or collapse of construction being demolished.

1. Strengthen or add new supports when required during progress of demolition.

3.4 DEMOLITION, GENERAL

A. General: Demolish and remove existing construction only to the extent required by new construction and as indicated. Use methods required to complete the Work within limitations of governing regulations and as follows:

1. Remove decayed, vermin-infested, or otherwise dangerous or unsuitable materials and promptly dispose of legally off-site.

2. Legally dispose of demolished items and materials promptly.

B. The Contractor shall take every precaution to guard against any movement or settlement of adjacent buildings or structures and shall provide and place, at his own expense, any bracing or shoring necessary or proper in connection therewith; and shall be solely and entirely responsible for the safety and support of such buildings or structures; and shall be solely liable for any such movement or settlement and any damage or injury caused thereby or resulting therefrom. If at any time the safety of any adjacent building or structure shall appear to be endangered, the Contractor shall cease operations, notify the Owner, and, at his own expense, shall take all proper means to support such building or structure and shall not resume operations until permission has been secured in writing from Owner or Owner's Representative. If the Owner or Owner's Representative considers additional bracing or shoring necessary to safeguard and prevent any such movement or settlement, the Contractor shall promptly design, provide and place, at his own expense, any such bracing or shoring as necessary. All designs shall be approved by a Professional Engineer.

C. Existing Items to Remain: Protect construction indicated to remain against damage and soiling during demolition.

3.5 DEMOLITION PROCEDURES FOR SPECIFIC MATERIALS

A. Concrete Structures: Demolish in small sections. Cut concrete walls evenly to a depth of at least 4 feet below final grade at junctures with construction to remain, using heavy equipment except where complete removal required for new work. Dislodge concrete from reinforcement at perimeter of areas being demolished, cut reinforcement, and then remove remainder of concrete indicated for demolition.

B. Concrete Slabs-on-Grade: Saw-cut perimeter of area to be demolished, then break up and remove.

3.6 ABANDONED MATERIALS OR STRTUCTURES

A. Pipes to be abandoned shall be capped off at each end and filled with a flowable fill concrete.

B. Manholes and existing structures shall be removed to 4 feet below finish grade and filled with sand, stone or other approved material. Holes shall be cut in the bottom to allow collected water to drain.

3.7 DISPOSAL OF DEMOLISHED MATERIALS

A. General: Except for items or materials indicated to be reused, salvaged, reinstalled, or otherwise indicated to remain Owner's property, remove demolished materials from Project site and legally dispose of them in an EPA-approved landfill.

1. Do not allow demolished materials to accumulate or remain on-site longer than 72 hours.

2. Remove and transport debris in a manner that will prevent spillage on adjacent surfaces and areas.

3. Remove debris from elevated portions of structure by chute, hoist, or other device that will convey debris to grade level in a controlled descent.

B. Burning: Do not burn demolished materials.

C. Disposal: Transport demolished materials off Owner's property and legally dispose of them.

3.8 CLEANING

A. Clean adjacent structures and improvements of dust, dirt, and debris caused by demolition operations. Return adjacent areas to condition existing before demolition operations began.

END OF SECTION

SECTION 02230
DEWATERING

PART 1 - GENERAL

1.1 SUMMARY

Keep all excavations and site structures free from water during construction.

1.2 RELATED SECTIONS

Intent: The provisions and intent of the AGREEMENT, including the General Conditions, Supplementary Conditions, and other requirements of the Contract Documents apply to the WORK as specified in this section. WORK related to this Section is described throughout the Specifications.

1.3 SUBMITTALS

A. Dewatering Plan: CONTRACTOR shall submit, for ENGINEER'S review, Drawings and data showing its proposed plan and required equipment for dewatering of all WORK areas. The Drawings and data shall include the planned method of dewatering excavations, wells, well points, sumps, collection and discharge lines, standby units proposed, and protective fills and ditches required for control of ground water, leachate and surface water.

B. Schedule: The plan for dewatering shall be submitted within 15 days before the start of work. CONTRACTOR shall furnish such other information as may be required for ENGINEER'S complete understanding and analysis of the dewatering, grading and excavation plan.

C. Engineer's Review: Review by ENGINEER shall not relieve CONTRACTOR of the responsibility for the adequacy of the dewatering plan or for furnishing all equipment, labor and materials necessary for dewatering the various parts of the WORK. If, during the progress of the WORK, it is determined by ENGINEER that the dewatering system grading and excavation Drawings, text and proposed methodology are inadequate, or that CONTRACTOR'S plan of construction is inoperative, CONTRACTOR shall, at its sole expense, furnish, install and operate such additional dewatering equipment and make such changes in other features of the Dewatering Plan or operation as may be necessary to perform the WORK in a manner satisfactory to ENGINEER.

PART 2 - PRODUCTS

Not Applicable.

PART 3 - EXECUTION

3.1 METHODS

A. Method: Dewatering can be accomplished by ordinary pumping methods, by the use of underdrains or deep well points, whichever will produce the above results. The CONTRACTOR shall ensure that continuous dewatering can be provided through the method chosen.

B. Location: All site WORK areas shall be dewatered where surface and/or ground water flows, if any, will adversely impact construction.

C. Maintenance: All permanent improvements shall be constructed in areas free from water. Construct and maintain all permanent or temporary slopes, dikes, levees, drainage ditches, sumps, and observation wells necessary for the removal of water from WORK areas. Design, furnish, install, maintain, and operate all necessary pumping and other dewatering equipment required for dewatering the various site WORK areas and for keeping the foundation and other areas free from water from any and all sources.

D. Schedule: All dewatering shall be performed in advance of grading, excavation and/or filling. The dewatering shall be accomplished in a manner that will prevent loss of fines from the foundation, will maintain stability of all excavated slopes and bottoms of excavations, and will permit all construction operations to be performed in the dry. Dewatering of excavations shall be performed to the extent required to permit placement of compacted fill materials in the dry and to prevent sloughing of the excavation side slopes.

E. Requirements: Lower the ground water level a minimum of 3 feet below sub-foundation grade or as recommended by Geotechnical Engineer prior to sub-foundation preparation and placement of foundation materials. During the placement and compaction of fill or bedding materials, the water level shall be maintained at this level in order that the required compaction can be achieved.

Where conditions are such that running or standing water occur in the trench bottom or the soil in the trench bottom displays a "quick" tendency, the water shall be removed by pumps and suitable means such as well points or previous underdrain bedding until the pipe has been installed and the backfill has been placed to a efficient height to prevent pipe flotation.

No installation will be permitted in trenches unless the subgrade is dry. If, in the opinion of the ENGINEER, the CONTRACTOR has failed to obtain a dry subgrade by use of all known methods of trench dewatering, the ENGINEER may then order the CONTRACTOR to excavate below grade and place sufficient selected fill material over the trench bottom. Additional excavation and fill shall meet the requirements of Division 2 and be at no extra cost.

3.2 PROTECTION OF FOUNDATIONS AND EXISTING FACILITIES

A. Contingency: Furnish standby equipment of sufficient size and capacity to insure continuous operation of the dewatering system. Any damage to structures due to a failure of dewatering equipment shall be repaired by CONTRACTOR at its expense, to the satisfaction of ENGINEER. CONTRACTOR may consider the use of recharge systems or other methods of protection of existing facilities.

B. Completion: Dewatering shall be maintained in the WORK areas for as long as is necessary for the completion of WORK. Upon completion of the dewatering and control of water operation, all temporary dewatering facilities shall be removed in a manner satisfactory to ENGINEER.

3.3 DISPOSAL OF DRAINAGE WATER

The disposal of all water from the dewatering and control of water operation and surface drainage shall be accomplished in a manner to have no detrimental effect on any of the new or existing facilities or cause siltation of existing streams. The method and location of disposal of all water shall be subject to the approval of ENGINEER and OWNER; in addition, no water shall be drained into WORK completed or under construction without prior consent of ENGINEER or OWNER. All Commonwealth of Virginia erosion and sediment control requirements shall be met.

END OF SECTION 02230

SECTION 02300
EARTHWORK

PART 1 - GENERAL

1.1 SUMMARY

A. This Section includes the following:

1. Preparing subgrades.
2. Excavating and backfilling.
3. Drainage course for slabs-on-grade.
4. Subbase course for concrete walks and pavements.
5. Base course for roadway.

1.2 DEFINITIONS

A. Backfill: Soil materials used to fill an excavation. Materials for backfill shall be the same as Compacted Structural Fill as described herein.

B. Base Course: Layer placed between the subbase course and asphalt paving.

C. Bedding Course: Layer placed over the excavated subgrade in a trench before laying pipe.

D. Borrow: Satisfactory soil imported from off-site for use as fill or backfill.

E. Drainage Course: Layer supporting slab-on-grade used to minimize capillary flow of pore water.

F. Excavation: Removal of material encountered above design subgrade elevations.

1. Additional Excavation: Excavation below design subgrade as directed by Architect/Engineer. Additional excavation and replacement material will be paid for according in accordance with the unit prices set forth in the bid form.
2. Unauthorized Excavation: Excavation below design subgrade or beyond indicated dimensions without approval by Architect/Engineer. Unauthorized excavation, as well as remedial work directed by Architect/Engineer, shall be without additional compensation.

G. Fill: Soil materials used to raise existing grades.

H. Structures: Buildings, footings, foundations, retaining walls, slabs, tanks, curbs, mechanical and electrical appurtenances, or other man-made stationary features constructed above or below the ground surface.

I. Subbase Course: Layer placed between the subgrade and base course for asphalt paving, or layer placed between the subgrade and a concrete pavement or walk.

J. Design Subgrade: Generally, surface or elevation remaining after completing excavation, or top surface of a fill or backfill immediately below subbase, drainage course, or topsoil materials.

1. Unless described otherwise, design subgrade for structures is defined as the bearing elevation of concrete footings or structural slabs, extending one foot beyond the edge of the structure and extending up on a 2.5H:1V slope to existing grades.

K. Utilities include on-site underground pipes, conduits, ducts, and cables, as well as underground services within buildings.

L. Rock: Mass Rock is defined as any material that cannot be dislodged by a Caterpillar Model No. D-8 heavy-duty tractor, or equivalent, equipped with a hydraulically operated, single-tooth power ripper without the use of hoe ramming or blasting. Trench rock is defined in terms of a Caterpillar Model No. 325 hydraulic excavator, or equivalent, instead of a Caterpillar D-8 tractor. These classifications do not include materials such as hardpan, loose rock, concrete, cemented gravel, or other materials that can be removed by means other than hoe-ramming or blasting, but for reasons of economy in excavating, the contractor chooses to remove by hoe-ramming or blasting. Mass and trench rock do not include boulders less than 1 cubic yard in volume. Boulders larger than 1 cubic yard in volume will be considered rock for payment purposes.

1.3 PROJECT CONDITIONS

A. Existing Utilities: Do not interrupt utilities serving facilities occupied by Owner or others unless permitted in writing by Architect/Engineer and then only after arranging to provide temporary utility services according to requirements indicated.

B. Do not commence earth moving operations until temporary erosion and sedimentation control measures are in place.

C. Two Geotechnical Engineering Reports have been prepared for this project by Schnabel Engineering South, LLC, entitled *Zion Crossroads Water and Sewer System – Elevated Water Storage Tank,* dated February 2017. This report is for informational purposes only and should not be considered part of the Contract Documents. The opinions expressed represent the Geotechnical Engineer's Interpretation of the subsurface conditions, tests, and the results of analyses conducted. Should the data contained in this report not be adequate for the Contractor's purposes, the Contractor may make, before bidding, independent exploration, tests and analyses.

1.4 QUALITY ASSURANCE

A. Geotechnical Testing Agency Qualifications: An independent testing agency hired by Contractor and qualified according to ASTM E 329 to conduct soil materials and rock-definition testing, as documented according to ASTM D 3740 and ASTM e 548 for testing indicated.

PART 2 - PRODUCTS

2.1 SOIL MATERIALS

A. General: Provide approved borrow soil materials when sufficient satisfactory soil materials are not available from excavations.

B. Compacted Structural Fill: ASTM D 2487 Soil Classification Groups CL, ML, SC, SM, SP, SW, GC, GM, GP, or GW, or a combination of these group symbols; free of rock or gravel larger than 3 inches (75 mm) in any dimension, debris, waste, frozen materials, vegetation, and other deleterious matter.

C. Unsatisfactory Soils: ASTM D 2487 Soil Classification Groups MH, CH, OL, OH, and PT, a combination of these group symbols, or as determined by the geotechnical engineer.

D. Borrow: On-Site soils meeting compacted structural fill or Off-Site borrow materials meeting Soil Classification Groups SC, SM, SP, SW, GC, GM, GP or GW per ASTM D-2487; free of rock or gravel larger than 3 inches (75 mm) in any dimension, debris, waste, frozen materials, vegetation, and other deleterious matter.

E. Backfill and Fill: Compacted Structural Fill.

F. Subbase: Naturally or artificially graded mixture of natural or crushed gravel, crushed stone, and natural or crushed sand; ASTM D 2940; with at least 90 percent passing a 1-1/2- inch(38-mm) sieve and not more than 12 percent passing a No. 200(0.075-mm) sieve.

G. Base: Naturally or artificially graded mixture of natural or crushed gravel, crushed stone, and natural or crushed sand; ASTM D 2940; with at least 95 percent passing a 1-1/2-inch(38-mm) sieve and not more than 8 percent passing a No. 200(0.075-mm) sieve.

H. Bedding: Naturally or artificially graded mixture of natural or crushed gravel, crushed stone, and natural or crushed sand; ASTM D 2940; except with 100 percent passing a 1-inch(25-mm) sieve and not more than 8 percent passing a No. 200(0.075-mm) sieve.

I. Drainage Fill: Washed, narrowly graded mixture of crushed stone, or crushed or uncrushed gravel; ASTM D 448; coarse-aggregate grading Size 57; with 100 percent passing a 1-1/2- inch(38-mm) sieve and 0 to 5 percent passing a No. 8 (2.36-mm) sieves.

J. Sand: ASTM C33; fine aggregate, natural or manufactured sand.

K. Lean Concrete: Self compacting, flowable concrete material produced from the following:

1. Portland Cement: ASTM C 150, Type II.
2. Fly Ash: ASTM C 618, Class C or F.
3. Normal-Weight Aggregate: ASTM c33, 3/8-inch nominal maximum aggregate size.
4. Foaming Agent: ASTM C 869.

5. Water: ASTM C 94, C94M.
6. Air-Entraining Admixture: ASTM C 260.

PART 3 - EXECUTION

3.1 PREPARATION

A. Protect structures, utilities, sidewalks, pavements, and other facilities from damage caused by settlement, lateral movement, undermining, washout, freezing temperatures or frost, and other hazards created by earthwork operations. Provide protective insulating materials as necessary.

B. Provide erosion-control measures to prevent erosion or displacement of soils and discharge of soil-bearing water runoff or airborne dust to adjacent properties and walkways.

C. Prevent surface water and ground water from entering excavations, from ponding on prepared subgrades, and from flooding Project site and surrounding area.

D. Protect subgrades from softening, undermining, washout, and damage by rain or water accumulation.

3.2 EXCAVATION

A. Excavation to design subgrade shall be classified regarding rock and excavations below design subgrade, and unclassified regarding other materials. Excavation of rock materials and unsuitable materials as defined herein, shall be based upon the quantities shown in the bid form.

1. If excavated materials intended for fill and backfill include unsatisfactory soil materials and rock, replace with satisfactory soil materials.
2. Compensation for rock within the deign subgrade envelope shall be made based upon unit prices set forth in the bid form.
3. Compensation for approved removal of rock and replacement with compacted structural fill beyond design subgrade shall be based upon unit prices set forth in the bid form.
4. Compensation for approved removal of unsatisfactory soil materials and replacement with compacted structural fill beyond design subgrade shall be based upon unit prices set forth in the bid form.

B. Excavate for structures, pavements, and walks to indicated elevations and dimensions. Extend excavations for placing and removing concrete formwork, for installing services and other construction, and for inspections. Trim bottoms to required lines and grades to leave solid base to receive other work.

C. Proof roll subgrades, before placing concrete, filling or placing aggregate courses, with loaded dump truck to identify soft pockets and areas of excess yielding. Do not proof roll wet or saturated subgrades. Unsuitable areas shall be undercut and replaced with compacted structural fill at the direction of the testing agency.

1. All undercut shall be surveyed to determined volume removed. No truck counts shall be allowed.

D. Reconstruct subgrades damaged by freezing temperatures, frost, rain, accumulated water, or construction activities. The contractor shall use pumps, site drainage or other measures to minimize water levels to the satisfaction of the testing agency.

E. Fill unauthorized excavation under foundations or wall footings by extending bottom elevation of concrete foundation or footing to excavation bottom, without altering top elevation. Lean concrete may be used to backfill to original subgrade elevation when approved by Engineer.

1. Fill unauthorized excavations under other construction as directed by Engineer.

F. Stockpile borrow materials and satisfactory soil materials, without intermixing, in shaped, graded, drained, and covered stockpiles. Stockpile soil materials away from edge of excavations and outside drip line of remaining trees.

G. All excavations shall be braced or sloped in accordance with current OSHA regulations. Excavations greater than 20 feet deep require in writing a slope stability evaluation for open excavations by a licensed geotechnical engineer or a sheeting design professional for sloped excavations. The evaluation shall be prepared and sealed by a professional engineer registered in the Commonwealth of Virginia. The specialty contractor shall have at least five years experience in this type work and shall submit plans through the general contractor for review by the Engineer. It is the contractor responsibility to provide this design to the Engineer for review prior to beginning deep excavations.

3.3 BACKFILLS AND FILLS

A. Fill: Place and compact fill material in layers to required elevations. Plow, scarify, bench, or break up sloped surfaces steeper than 1 vertical to 4 horizontal so fill material will bond with existing material.

B. Uniformly moisten or aerate subgrade and each subsequent fill or backfill layer before compaction to within 2 percent of optimum moisture content.

1. Remove and replace, or scarify and air dry, otherwise satisfactory soil material that exceeds optimum moisture content by 3 percent and is too wet to compact to specified dry unit weight.

C. Compaction: Place backfill and fill materials in layers not more than 8 inches(200 mm) in loose depth for material compacted by heavy compaction equipment, and not more than 4 inches(100 mm) in loose depth for material compacted by hand-operated tampers. Only light hand-operated equipment should be used to compact back fill against walls.

D. Compact soil to not less than the following percentages of maximum dry density according to ASTM D 698:

1. Under structures, building slabs, steps, and pavements, scarify and recompact top 12 inches (300 mm) of existing subgrade and each layer of backfill or fill material at 95 percent.
2. Under walkways, scarify and recompact top 6 inches (150 mm) below subgrade and compact each layer of backfill or fill material at 95 percent.
3. Under lawn or unpaved areas, scarify and recompact top 6 inches (150 mm) below subgrade and compact each layer of backfill or fill material at 90 percent.

E. Grading: Uniformly grade areas to a smooth surface, free from irregular surface changes. Comply with compaction requirements and grade to cross sections, lines, and elevations indicated. Grade lawns, walks, and unpaved subgrades to tolerances of plus or minus 1 inch (25 mm) and pavements and areas within building lines to plus or minus 1/2 inch (13 mm).

F. Subbase and Base Courses: Under pavements and walks, place subbase course on prepared subgrade. Place base course material over subbase. Compact to required grades, lines, cross sections, and thickness to not less than 95 percent of maximum dry unit weight according to ASTM D 1557.

G. Under slabs-on-grade, place drainage course on prepared subgrade. Compact to required cross sections and thickness to not less than 95 percent of maximum dry unit weight according to ASTM D 698.

3.4 FIELD QUALITY CONTROL

A. Testing Agency: Contractor will engage a qualified independent testing and inspecting agency to perform field tests and inspections and to prepare test reports.

B. Allow testing agency to test and inspect subgrades and each fill or backfill layer. Proceed with subsequent earthwork only after test results for previously completed work comply with requirements.

C. When testing agency reports that subgrades, fills, or backfills have not achieved degree of compaction specified, scarify and moisten or aerate, or remove and replace soil to depth required; recompact and retest until specified compaction is obtained to the satisfaction of the geotechnical engineer.

D. Footing Subgrade: At footing subgrades, at least one test of each soil stratum will be performed to verify design bearing capacities.

E. Testing Agency will test compaction of soils in place according to ASTM D 1556, ASTM D 2167, ASTM d 2922, and ASTM D 2937, as applicable. Tests will be performed at the following locations and frequencies:

1. Paved and Building Slab Areas: At subgrade and at each compacted fill and backfill layer, at least one test for every 2,500 sq. ft. or less of paved area or building slab, but in no case fewer than one test per lift.
2. Foundation Wall Backfill: At each compacted backfill layer, at least one test for every 100 feet or less of wall length, but no fewer than two tests.

F. When testing agency reports that subgrades, fills or backfills have not achieved degree of compaction specified, scarify and moisten or aerate, or remove and replace soil materials to depth required; recompact and retest until specified compaction is obtained.

3.5 PROTECTION AND DISPOSAL

A. Protect newly graded areas from traffic, freezing, and erosion. Keep free of trash and debris.

B. Repair and reestablish grades to specified tolerances where completed or partially completed surfaces become eroded, rutted, settled, or where they lose compaction.

C. Where settling occurs before Project correction period elapses, remove finished surfacing, backfill with additional soil material, compact, and reconstruct surfacing.

D. Disposal: Remove surplus satisfactory soil and waste material, including unsatisfactory soil, trash, and debris, and legally dispose of it off Owner's property.

END OF SECTION

SECTION 02325
TRENCHING, AND BACKFILLING

PART 1 - GENERAL

1.1 This section is designed to provide the minimum requirements for trenching and backfilling of pipe trenches. Should the drawings provide specific details for specific installations the drawing requirements shall take precedent. When working in Vdot right of ways the Vdot requirements shall take precedent.

1.2 Earthwork and trenching **EXCAVATION IS UNCLASSIFIED** and includes excavation to subgrade elevations indicated, regardless of character of materials and obstructions encountered. No extra payment will be made, regardless of the suitability or unsuitability of on-site soils for the disposal or importing of soils to the project site.

1.3 Locate existing utilities, culverts and structures, above or below ground, before any excavation starts. Coordinate work with utility companies. Protect, maintain in service, and prevent damage to utilities not designated to be removed. When utilities are encountered and are not shown on the Contract Drawings or when locations differ from those shown on the Contract Drawings, notify the Inspector for instructions before proceeding.

1.4 Explosives

A. Work with explosives shall be executed by persons who are licensed or otherwise authorized by governing authorities for the work required.

B. Store and use explosives in accordance with Federal, State and Local regulations. The Contractor shall be responsible for and shall satisfactorily correct all damage resulting from use of explosives.

1.5 Testing and Inspection

A. In trenching operations, compaction testing shall be performed at the start of trenching, in increments of approximately 2000L.F. of trench and at all commercial driveway entrance crossings.

B. Allow Inspector to approve subgrade and each fill layer, or for every 2,000 square feet of fill placed, whichever results in more frequent inspection.

C. The degree of compaction obtained shall be verified by means of field density tests made by an Independent Laboratory. Where tests indicate a deficiency in degree of compaction, the Contractor shall correct such conditions and the Testing Laboratory shall make additional tests in order to verify that the corrected work has been satisfactory. The Testing Laboratory shall provide four (4) certified copies of all test reports.

1.6 Definitions

A. Excavation: Removal of material encountered to required subgrade and/or subsoil elevations indicated, and the subsequent disposal of materials removed.

B. Fill: Material placed and compacted above the level of the subsoil which existed before construction of the project.

C. Rock: Hard bed rock, boulders or similar material requiring the use of rock drills and/or explosives for removal. The criteria for classification of general excavation as rock is any material which cannot be dislodged by a Caterpillar D-8 Tractor, or equivalent, equipped with a single tooth hydraulically operated power ripper. The criteria for trench rock shall be that a Caterpillar 345 Backhoe, or equivalent, with a proper width bucket cannot remove the material.

D. Subgrade: The undisturbed earth, or the compacted soil layer, immediately below granular subbase, drainage fill, or topsoil materials.

E. Subsoil: The undisturbed earth immediately below the existing topsoil layer.

F. Unauthorized Excavation: Removal of materials below indicated subgrade elevations or beyond horizontal excavation dimensions without specific direction of the Inspector.

G. Undercut Excavation: When excavation has reached required sub-grade elevations, notify the Inspector who will make an inspection of conditions. If unsuitable bearing material is encountered at required subgrade elevations, carry excavations deeper as directed by the Inspector.

H. Unsuitable Material: Material such as clay mass, frozen materials, cinders, ashes, refuse, and vegetable, organic material or any other material deemed unsuitable by the Inspector. Unsuitable material shall be removed and replaced with suitable material as specified herein for the intended use.

I. Bedding. Bedding is the material placed under the pipe.

J. Haunching. Material that is placed on the sides of the pipe to the spring line.

K. Initial Backfill. Material placed on top of the haunch material until 12" above the pipe.

L. General Backfill. Material Placed on top of the initial backfill up to grade.

1.7 Suitability of Materials

A. Unless otherwise noted, the Contractor shall be responsible for the disposal of excess material (including but not limited to undercut, root mat and excess topsoil and fill material), obtaining borrow material and the suitability of all on-site material above subgrade.

PART 2 - PRODUCTS

2.1 Product Definitions

A. Clean Earth Fill: Approved material free of debris, roots, frozen materials, organic matter, rock or gravel larger than 2 inches in any dimension or other harmful matter and be classified as ML or better material in accordance with the Unified Soils System, ASTM D-2487.

B. Fine Aggregate: #9 or #10 stone as per VDOT Road and Bridge Specifications Section 203 or Grade A or Grade B fine aggregate as per VDOT Road and Bridge Standard Section 202.

C. Coarse Aggregate: #57 stone as per VDOT Road and Bridge Specifications Section 203.

D. Crusher Run Aggregate: #26 as per VDOT Road and Bridge Specifications Section 205.

E. Select Material: Type I or II according to Section 207 of the VDOT Road and Bridge Specifications.

F. Shoulder Stone: Aggregate material #21A or #21B as per VDOT Road and Bridge Specifications Section 209.

G. Topsoil: In trenching operations, topsoil shall be the top 6 inches of original soil from the trench. Otherwise, topsoil shall be fertile, friable loam, containing not less than 2 percent by weight of finely divided, decomposed vegetation. Topsoil shall be free of subsoil, clay lumps, brush, weeds, roots larger than 1/2 inch, stones larger than 1/2 inch diameter and other material toxic or harmful to growth.

H. Geotextile Fabric: Woven or nonwoven polypropylene or polyester equaling or exceeding the following tests.

1.	Weight	ASTM D-1910	3.9 oz per sq. yd. minimum
2.	Grab Tensile Strength	ASTM D-1682	200 lbs. minimum
3.	Trapezoid Tear Strength	ASTM D-1117	100 lbs. minimum
4.	Grab Modulus (Mullen Burst)	ASTM D-3786	370 lbs. minimum

PART 3 - EXECUTION

3.1 General Excavation

A. Remove vegetation, debris, unsatisfactory materials and harmful materials prior to placement of fill. Plow, strip, or break up sloped surfaces steeper than 4 to 1 so that fill material will bond with existing surface.

B. Strip existing topsoil, leaf mold and organic materials, meeting topsoil requirements. Deposit in storage piles separate from other excavated material.

C. Provide adequate and positive site drainage throughout construction. Keep excavations free of water while work is being performed and until backfilled. Where underground streams or springs are found, provide temporary drainage and notify the Inspector.

D. Excavate unsatisfactory soil materials encountered that extend below required elevations, to the additional depth as directed by the Inspector.

E. Where rock is encountered so that a manhole, vault, or other structure will bear on rock, the rock shall be used to support the foundation. When only a portion of the foundation will bear on rock, the Contractor shall excavate the rock at least 8 inches below the foundation and provide at least 8 inches of aggregate fill.

F. Where unauthorized excavation has been carried below authorized depth, backfill and compact in the same manner as specified for authorized excavations of same classification, unless otherwise directed by the Inspector.

G. Stockpile excavated soil material satisfactory for backfill or fill until required. Place, grade and shape stockpiles for proper drainage. Do not store within drip lines of trees indicated to remain.

H. Sheeting and Shoring

1. Sheeting and shoring shall be provided as necessary to construct and protect the excavation, structures of all types, and as necessary for the safety of the employees.

2. All sheeting and bracing shall be removed unless directed otherwise by the Inspector, in such a manner so the construction or other structures are not endangered. All voids left or caused by the withdrawal of sheeting shall be backfilled immediately with approved material and compacted by ramming with tools especially adapted for that purpose, or by other means directed by the Inspector.

3. All sheeting and bracing which is left in place shall be cut to a depth of eighteen inches below the final grade line. The cut off ends shall be removed from the site.

I. Remove surplus or unsuitable material and dispose of the materials off the site at no additional cost to the Owner.

J. Dewatering

1. Where conditions are such that running or standing water occurs in the trench bottom or the soil in the trench bottom displays a "quick" tendency, the water should be removed by pumps and suitable means such as well points or pervious underdrain bedding until the pipe has been installed and the backfill has been placed to a sufficient height to prevent pipe flotation.

K. Trenching

1. Excavate to the lines and grades indicated for pipelines and structures making proper allowance for pipe bedding materials, pipe bells and concrete form work.
2. Excavate pipeline trenches with vertical walls. Maintain trench width within allowable trench width from bottom of trench to a point 12 inches above top of pipe.

3. Where rock is encountered, excavate 6 inches below the pipe bottom and provide stone to bed the pipe.
4. Where unsuitable soil is encountered, excavate to depth determined by the Inspector and replace with coarse granular fill (pipe bedding) thoroughly and uniformly compacted.

3.2 Backfilling of Pipe and Trenches

A. The following is the minimum requirement for backfilling of pipes and trenches. Should the drawings indicate a deviation from these minimum specifications the more stringent shall apply.

B. Pipe Bedding

1. Ductile Iron Pressure Pipe

a. Ductile iron pipe shall be laid in a flat bottom trench on undisturbed earth. If rock is encountered at the bottom of the trench, bedding shall be a minimum of six inches of compacted course aggregate or crusher run aggregate. Trench bottom shall be hand excavated for bell holes at all joints. Over rock, the six-inch minimum depth of bedding shall be maintained at all joints or other pipe appurtenances. Bedding shall be compacted to a minimum 95 percent of maximum density as determined by ASTM D698 (standard Proctor).

2. Ductile Iron Gravity Pipe

a. Ductile iron pipe shall be laid on a minimum of 4 inches of compacted course aggregate or crusher run aggregate. If rock is encountered at the bottom of the trench, bedding material shall be a minimum of six inches. Trench bottom shall be hand excavated for bell holes at all joints. Over rock, the six-inch minimum depth of bedding shall be maintained at all joints or other pipe appurtenances. Bedding material shall be compacted to a minimum 95 percent of maximum density as determined by ASTM D698 (standard Proctor).

3. PVC, HDPE, PE and CT Pressure Pipe 3 inches and smaller

a. PVC, HDPE, PE and CT pipe shall be laid on a minimum of 4 inches of compacted fine aggregate placed upon undisturbed earth. If rock is encountered at the bottom of the trench, fine aggregate shall be a minimum of six inches. Trench bottom shall be hand excavated for bell holes at all joints. The minimum depth of bedding shall be maintained at all joints or other pipe appurtenances. Bedding material shall be compacted to a minimum 95 percent of maximum density as determined by ASTM D698 (standard Proctor).

4. PVC Pressure Pipe 4 inches and larger

a. PVC pressure pipe shall be laid on a minimum of 4 inches of compacted course aggregate or crusher run aggregate placed upon undisturbed earth. If rock is encountered at the bottom of the trench, course aggregate shall be a minimum of six inches. Trench bottom shall be hand excavated for bell holes at all joints. The minimum depth of bedding shall be maintained at all joints or other pipe appurtenances. Bedding material shall be compacted to a minimum 95 percent of maximum density as determined by ASTM D698 (standard Proctor).

5. PVC Gravity Pipe 6 inches and larger

a. PVC pressure pipe shall be laid on a minimum of 4 inches of compacted course aggregate or crusher run aggregate placed upon undisturbed earth. If rock is encountered at the bottom of the trench, bedding shall be a minimum of six inches. Trench bottom shall be hand excavated for bell holes at all joints. The minimum depth of bedding shall be maintained at all joints or other pipe appurtenances. Bedding material shall be compacted to a minimum 95 percent of maximum density as determined by ASTM D698 (standard Proctor).

C. Haunching

1. Haunching material shall be the same as the bedding material. Material shall be placed and consolidated under the pipe haunch to provide adequate side support to the pipe while avoiding both vertical and lateral displacement of the pipe from proper alignment. Haunching is placed to the pipe springline and shall be compacted to a minimum 95 percent of maximum density as determined by ASTM D698 (standard Proctor).

D. Backfilling Trenches

1. All trenches shall be backfilled immediately after the pipes and appurtenances are laid therein with the exception of pressure pipe, where joints are to remain uncovered until after pressure testing is completed.

2. Initial Backfill

a. Ductile Iron Pressure Pipe and Gravity Pipe

1) Initial backfill shall be with select material. Initial backfill shall begin at the springline of the pipe and shall be placed in six-inch layers up to a minimum level of 12 inches above the crown of the pipe. Initial backfill shall be compacted to a minimum 95 percent of maximum density as determined by ASTM D698.

b. PVC Pressure Pipe 4" and larger

1) Initial backfill shall be with select material. Initial backfill shall begin at the springline of the pipe and shall be placed in six-inch layers up to a minimum level of 12 inches above the crown of the pipe. Initial backfill shall be compacted to a minimum 95 percent of maximum density as determined by ASTM D698.

c. PVC, HDPE, PE and CT Pressure Pipe 3" and smaller

1) Initial backfill shall be with the same material as the haunching material and shall be placed in 6" layers to a minimum level of 6" over the crown of the pipe. The remainder of the initial

backfill shall be with select material to a minmum level of 12" above the crown of the pipe.

d. Gravity Pipe

1) Initial backfill shall be with select material. Initial backfill shall begin at the springline of the pipe and shall be placed in six-inch layers up to a minimum level of 12 inches above the crown of the pipe. Initial backfill shall be compacted to a minimum 95 percent of maximum density as determined by ASTM D698.

E. Final Backfill

1. General

a. Final backfill for trenches shall be with general backfill material. Final backfill not subjected to vehicular traffic or greater than 5' feet from the edge of pavement shall be placed in layers no greater than one foot thick and compacted to at least 90 percent maximum density as determined by ASTM D698. Final backfill shall not contain stones larger than 6 inches in their greatest dimension, the stones shall not be in excess of 20 percent of the volume of backfill material, and such stones shall be well distributed throughout the mass. Topsoil (in grassed areas) shall be deposited in the final layer of backfill to guarantee the areas will be returned to original or better conditions.

2. Roadways

a. Where excavation has been made through pavement, subgrades of roadways under construction, where subgrades are undercut by excavation, or where excavation is within 5' of edge of pavement, backfilling shall be performed with shoulder stone. Backfill material shall be placed in layers not greater than six inches thick, with each layer thoroughly compacted to 95 percent of maximum density as determined by ASTM D698. Work within VDOT rights-of-way shall meet all requirements of the Virginia Department of Transportation.

3.3 Compaction

A. Percentage of Maximum Density Requirements. Compact each layer of fill or backfill to not less than the following percentages of the maximum density at optimum moisture content as determined by ASTM D 698 (AASHTO T-99). Compact soil materials using equipment suitable for materials to be compacted and work area locations.

1. 95 percent beneath and within 25 feet of buildings and structures, including those shown for future construction.

2. 95 percent beneath pavements, walks, road shoulders, including those shown for future construction or proposed, 95 percent up to 12 inches above top of pipes.

3. 90 percent in other unpaved areas.

4. If the density of the adjacent soil is more than the density specified, compact to a density not less than the density of the adjacent soil.

B. Use power-driven hand tampers for compacting materials adjacent to structures and in areas inaccessible to rollers. Use equipment capable of adding moisture to the soil material as determined by moisture-density tests. Where required, uniformly apply water to the surface of the subgrade or layer of soil material in such a manner as to prevent free water appearing on the surface, either during or subsequent to compacting operations.

C. Remove and replace, or scarify and air dry, soil material that is too wet to permit compaction to specified percentage of maximum density.

D. Do not place or compact material that is muddy, frozen, or contains frost or ice.

3.4 Pipe Bedding and Backfill

A. Place clean earth fill to obtain elevations shown on the drawings. Do not place fill on muddy or frozen areas.

B. When the existing ground surface has been disturbed and has a density of less than that specified for the particular area classification, scarify the ground surface, pulverize, adjust moisture condition to optimum moisture content, and compact to required depth and percentage of maximum density. Excavate depressions caused by removal of stumps or other clearing operations to firm subgrade. Fill with clean earth fill.

C. Place backfill and fill materials in loose lifts no less than 4 inches and no more than 8 inches in depth. Before compaction, moisten or aerate each layer as necessary to provide optimum moisture content.

D. Place backfill materials evenly adjacent to structures. Take care to prevent wedging action of the backfill against structures by carrying the material uniformly around the structure to approximately the same elevation in each lift.

E. Backfill excavations to excess elevations (above the finished grade) to allow for shrinkage and settlement. Excess elevation under paved and surfaced roadways and parking areas shall not exceed 2 inches.

F. Place and compact bedding in accordance with the construction plans below bottom of pipe prior to laying pipe. Where directed by the Inspector place soil stabilization fabric in the excavation before placing bedding. Place fabric in accordance with the manufacturer's recommendations.

G. Compact pipe bedding using compaction equipment suitable for the situation. If necessary hand tamp and rod as required to prevent settlement.

H. Unless otherwise required, backfill trench to a compacted depth of one foot over the pipe with clean earth fill. Backfill shall be placed uniformly on each side of the pipe and compacted in layers not exceeding 6 inches. Do not backfill when the subgrade is muddy or frozen or when the backfill material is frozen or muddy.

3.5 Grading.

A. In the VDOT R-O-W Grade in compliance with VDOT specifications. Uniformly grade areas within limits of grading, including adjacent transition areas. Smooth finished surface within specified tolerances, compact with uniform levels or slopes between points where elevations are indicated, or between such points and existing grades.

B. Protect newly graded areas from traffic and erosion. Where compacted areas settle, or are disturbed by subsequent construction or adverse weather, scarify the surface, reshape and compact to the required density, with additional fill material if required. Use hand tamper for recompaction over underground utilities.

C. Where topsoiling is specified, excavate or fill below finished grades shown, leaving space for topsoiling.

D. Where not otherwise shown on the Contract Drawings, all disturbed areas shall be restored to the original grade.

E. Tolerances

1. Shape subgrade under pavements to line, grade, and cross-section to within 1/2 inch of required subgrade elevations.

2. Finish areas to receive topsoil to within 0.10 foot of required elevations.

Trench Cross-section Terminology

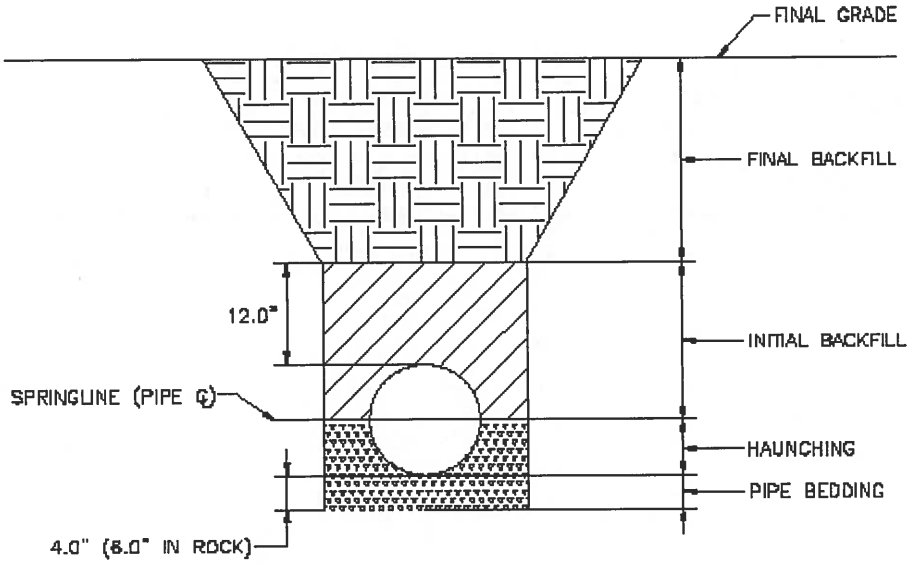

TRENCH CROSS–SECTION TERMINOLOGY

END OF SECTION

SYSTEM 02600
PIPING SYSTEM TESTING

PART 1 - GENERAL

1.1 SUMMARY

A. Testing and Disinfection shall be as described herein.

1.2 References

A. AWWA C600, Installation Of Ductile Iron Mains and Their Appurtenances", latest addition

1.3 QUALITY ASSURANCE

A. Comply with all applicable codes and regulations as required by regulatory agencies having jurisdictions over this Work.

1.4 CONNECTIONS TO EXISTING SYSTEM:

A. The Contractor shall make connections to the existing system under a pressure or non-pressure condition, as indicated, complying with the system owner's requirements for the time of day such work can be done. The Contractor shall pay all costs associated with the connections unless otherwise indicated. If the system owner performs the work, the Contractor shall arrange for the work to be done.

B. Owner's valves and equipment shall be operated only by the Owner.

C. CONTRACTOR shall install as indicated on the Contract Drawings valves to isolate sections of the Pipe system to be tested.

D. After testing is completed and accepted, CONTRACTOR shall make final connections as indicated on the Contract Drawings.

PART 2 - PRODUCTS (not used)

PART 3 - EXECUTION

3.1 PRESSURE TESTING OF WATER MAINS AND PRESSURE PIPE

A. General

1. The test pressure shall be a minimum of 150 psi or a minimum of 1.5 times the maximum working pressure at all parts of the test section, whichever is greater.

2. The test pressure shall not exceed the thrust restraint design pressures or 1.5 times the pressure rating of the pipe or joint, whichever is less (as specified by the manufacturer).

3. The test pressure shall not exceed the rated working pressure of the valves when the pressure boundary of the test section includes closed resilient- seated gate valves or butterfly valves.

4. CONTRACTOR shall install taps on the top of the pipe for venting air at all high points or as required to eliminate all the air in the system at no cost to the OWNER.

5. On distribution lines valves shall be installed at a maximum distance of 2000 feet.

6. Where the distribution system consists of various sizes of pipe, valves shall be added as required to isolate the different pipe size sections.

B. Test setup and pressurization

1. Following the installation of any new pipeline, all newly laid pipe or any valved section thereof shall be subjected to a hydrostatic pressure test. Each valved section of pipeline shall be slowly filled with water. When venting air from pipelines, it is important to limit the pipeline fill rate to avoid excessive surge pressures when the water reaches the air venting opening(s). The specified test pressure shall be applied using a suitable pump connected to the pipeline. (Note: The specified test pressure shall be based on the elevation of the lowest point of the pipeline or section under test and corrected to the elevation of the test gauge. Before applying the specified test pressure, air shall be expelled completely from the pipeline section under test. If permanent air vents are not located at all high points, corporation stops shall be installed at these points to expel any air as the line is filled with water. Corporation stops should be rated for the design pressure of the pipeline. Exceeding design pressure is not recommended and should be checked with the product manufacturer before proceeding. Following removal of any air, the corporation stops shall be closed and the test pressure applied (at the conclusion of the pressure test, the corporation stops shall be removed and the pipe plugged, or left in place as required by the OWNER). After filling the pipeline and before application of the test pressure, the test section shall be maintained at the working pressure for a sufficient period of time for it to stabilize with respect to line movement under pressure, water absorption by the lining, and so on. This may require several cycles of pressurizing and bleeding trapped air prior to beginning the test. The hydrostatic test shall be of at least a 2-hour duration. The test pressure shall not vary by more than ±5 psi for the duration of the test. Test pressure shall be maintained within this tolerance by adding makeup water through the pressure test pump into the pipeline. The amount of makeup water added shall be accurately measured (in gallons per hour) by suitable methods and shall not exceed the applicable testing allowance.

C. EXAMINATION.

1. Any exposed pipe, fittings, valves, hydrants, and joints shall be examined carefully during the pressure test. Any damaged or defective pipe, fittings, valves, hydrants, or joints that are discovered during or following the pressure test shall be repaired or replaced with reliable material, and the test shall be repeated until satisfactory results are obtained.

D. Testing Allowance Mechanical Joint and Bell and Spigot Piping

1. Testing allowance shall be defined as the maximum quantity of makeup water that can be added into a pipeline undergoing hydrostatic pressure testing, or any valved section thereof, to maintain pressure within ±5 psi of the specified test pressure (after the pipeline has been filled with water and the air has been expelled). The

testing allowance is exceeded if the quantity of makeup water is greater than that determined by the following formula:

$$L = \frac{SD(P^{.5})}{148{,}000}$$

Where:

L = testing allowance (makeup water) (gph)

S = length of pipe tested (ft)

D = nominal diameter of the pipe (in.)

P = average test pressure during the hydrostatic test (psi [gauge])

2. These formulas are based on a testing allowance of 10.49 gpd/mi/ in. of nominal diameter at a pressure of 150 psi.

3. The testing allowance may not be reasonable if the pressure boundary of the test section includes appurtenances subjected to pressures above their rated working pressures because of possible leakage by those appurtenances.

4. When testing against closed metal seated valves an additional testing allowance per closed valve of 0.0078 gal/hr/in of nominal valve size shall be allowed. When hydrants are in the test section, the test shall be made against the main valve in the hydrant.

E. Acceptance of installation

1. Acceptance shall be determined on the basis of testing allowance only. If any test of a new pipeline requires a quantity of makeup water greater than the testing allowance repairs or replacements shall be accomplished in accordance with the contract documents. All visible leaks shall be repaired regardless of the allowance used for testing.

3.2 Above Ground and/or exposed pipe

A. Testing

1. Testing shall be done as stated in section 3.1 above.

2. There shall be no visible leakage anywhere in the system.

END OF SECTION

SECTION 02798
UTILITY LOCATION AND IDENTIFICATION

PART 1 - GENERAL

1.1 SUMMARY

The purpose of this Section is to specify the requirements for utility location tape, tracer wire, and test stations. In general, all utility pipelines shall be marked by appropriately marked metallic tape 12 inches below finished grade above the conduit.

1.2 RELATED SECTIONS

Intent: The provisions and intent of the AGREEMENT, including the General Conditions, Supplemental Conditions, and other requirements of the Contract Documents apply to the WORK as specified in this Section. WORK related to this Section is described throughout the Specifications.

1.3 REFERENCES

Code of Virginia

1.4 SUBMITTALS

Shop Drawings shall be submitted for all products specified in this Section as outlined in Division 1.

1.5 SEQUENCING

The tape shall be installed at the same time as the pipeline.

PART 2 - PRODUCTS

2.1 TRACING WIRE SYSTEM

A. Wire Types

1. Wire shall be #12, stranded, type THHN, thermoplastic insulated and nylon jacketed. Wire shall be color coded blue for water and green for sewer.

B. Acceptable Wire Connectors:

1. Set screw pressure type for use with #12 stranded wire size. Holub Industries MA-2, Ideal Industries Model 30-222, or equal.
2. C-Tap for two way splicing of tracer wire, for use with #12 stranded wire size. T&B #54705 or equal.
3. Split bolts, three wire type for splicing of tracer wire, for use with #12 stranded wire size. ILSCO Catalog #SEL-2S or equal.
4. Wire nuts are not permitted underground

C. Test Station Box – Test station boxes shall be a minimum of 18 inches tall with cast iron lid

and collar and plastic body tube with flared bottom to prevent settling and pull-out. Cast iron collar shall be a minimum of 2 inches deep. Lid shall be bolted to collar with brass bolt. Lid shall be imprinted with the wording "TEST". Test Station Box shall be Bingham & Taylor Figure Number P-200 Test, 2-1/2 inches in size.

1. Electric Tap – vinyl electric tape.

2. Electrical Coating 0- Scotchkote 3M electrical coating Part No. 054007 or equal.

3. Wire nut – non-conductive for #12 stranded wire size.

2.2 WARNING AND IDENTIFICATION TAPE

A. Polyethylene plastic and metallic core or metallic-faced, acid-and alkali-resistant, polyethylene plastic warning tape manufactured specifically for warning and identification of buried utility lines. Provide tape on rolls, 2-inch minimum width, color coded as specified below for the intended utility with warning and identification imprinted in bold black letters continuously over the entire tape length. Warning and identification to read, "CAUTION, BURIED (intended service) LINE BELOW" or similar wording. Color and printing shall be permanent, unaffected by moisture or soil.

Warning Tape Color Codes

Yellow:	Gas, Oil, and Dangerous Materials
Blue:	Water
Green:	Sewer

B. Warning Tape for Metallic Piping: Acid and alkali-resistant polyethylene plastic tape conforming to the width, color, and printing requirements specified above. Minimum thickness of tape shall be 0.003 inch. Tape shall have a minimum strength of 1500 psi otherwise, and 1250 psi crosswise, with a maximum 350 percent elongation.

C. Detectable Warning Tape for Non-Metallic Piping: Polyethylene plastic tape conforming to the width, color, and printing requirements specified above. Minimum thickness of the tape shall be 0.004 inch. Tape shall have a minimum strength of 1500 psi lengthwise and 1250 psi crosswise. Tape shall be manufactured with integral wires, foil backing, or other means of enabling detection by a metal detector when tape is buried up to 3 feet deep. Encase metallic element of the tape in a protective jacket or provide with other means of corrosion protection. Color coded tape shall be installed flat with color side up 12 inches to 24 inches over all installed utility lines including main line and service lateral or service connection.

END OF SECTION

SECTION 02821
CHAIN LINK FENCE AND GATES

PART 1 - GENERAL

1.1 SUMMARY

A. Contractor shall furnish and install chain link fence as indicated on the Contract Documents and specified herein.

1.2 DESCRIPTION

A. This Section includes materials applicable for commercial/industrial and security chain link fence and gates.

1. Galvanized steel coated chain link fabric
2. Polymer coated steel chain link fabric
3. Galvanized steel framework and fittings
4. Polymer coated galvanized steel framework and fittings
5. Gates: swing and cantilever slide
6. Barbed wire
7. Installation

1.3 REFERENCES

A. ASTM A121 Specification for Metallic-Coated Carbon Steel Barbed Wire B. ASTM A392 Specification for Zinc-Coated Steel Chain-Link Fence Fabric C. ASTM A491 Specification for Aluminum-Coated Steel Chain-Link Fabric

B. ASTM A780 Standard Practice for Repair of Damaged and Uncoated Areas of Hot- Dip Galvanized Coatings

C. ASTM A824 Specification for Metallic-Coated Steel Marcelled Tension Wire for Use With Chain Link

D. ASTM F552 Standard Terminology Relating to Chain Link Fencing G. ASTM F567 Standard Practice for Installation of Chain Link Fence H. ASTM F626 Specification for Fence Fittings

E. ASTM F668 Specification for Polymer Coated Chain Link Fence Fabric

F. ASTM F900 Specification for Industrial and Commercial Swing Gates

G. ASTM F934 Specification for Standard Colors for Polymer-Coated Chain Link

H. ASTM F1043 Specification for Strength and Protective Coatings of Metal Industrial Chain Link Fence Framework

I. ASTM F1083 Specification for Pipe, Steel, Hot-Dipped Zinc-Coated (Galvanized) Welded, for Fence Structures

J. ASTM F1184 Specification for Industrial and Commercial Horizontal Slide Gates

K. ASTM F1664 Specification for Poly (Vinyl Chloride) (PVC) and Other Conforming Organic Polymer-Coated Steel Tension Wire Used with Chain-Link Fence

L. ASTM F1665 Specification for Poly (Vinyl Chloride) (PVC) and Other Conforming Organic Polymer-Coated Steel Barbed Wire Used with Chain-Link Fence

M. ASTM F1910 Specification for Long Barbed Tape Obstacles

N. ASTM F1911 Standard Practice for Installation of Barbed Tape

O. ASTM F2200 Specification for Automated Vehicular Gate Construction

P. CLFMI SFR2445, Security Fence Recommendations

Q. CLFMI WLG2445, Chain Link Fence Wind Load Guide for the Selection of Line Post and Line Post Spacing

R. Federal Specification RR-F-191/3E Fencing, Wire and Post, Metal (Chain–LinkFence Posts, Top Rails and Braces)

S. UL 325 Door, Drapery, Gate, Louver and Window Operators

1.4 SUBMITTALS

A. Submittals shall be in accordance with Division 1.

B. Shop drawings: Site plan showing layout of fence location with dimensions, location of gates and opening size, cleared area, elevation of fence and gates, details of attachments and footings.

C. Certifications: Manufacturers material certifications in compliance with current ASTM specifications.

D. Domestic certifications: Material certifications, Made in U.S.A., Buy American Act or Buy America when required.

E. Specification Changes: May not be made after the date of bid.

1.5 QUALITY ASSURANCE

A. Qualifications

1. Manufacturer's Qualifications:

a. The equipment manufacturer shall modify their standard equipment to meet the minimum values specified for dimensions, design, and the intent of this specification.

b. Manufacturers regularly engaged in the manufacture of the equipment as specified herein and who can demonstrate equipment of this specified design, in actual service for a period of not less than 5 years will be considered as acceptable manufacturers.

c. Manufacturers shall show evidence of quality assurance in manufacturing and supplying equipment essential in details to the equipment herein specified.

d. Tolerances: Current published edition of ASTM specifications tolerances apply. ASTM specification tolerances supersede any conflicting tolerance.

2. Component Supply and Compatibility:

a. Obtain all equipment included in this Section, regardless of the component manufacturer, from the equipment supplier for sole source responsibility.

b. The equipment supplier to review and approve or prepare all Shop Drawings and other submittals for all components furnished under this Section.

1.6 DELIVERY, STORAGE, AND HANDLING

A. Packing, Shipping, Handling, and Unloading

1. Deliver materials to the Site to ensure uninterrupted progress of the Work. Deliver anchor bolts and anchorage devices, which are to be embedded in cast-in-place concrete in ample time to prevent delay of that Work.

B. Acceptance at Site

1. All boxes, crates, and packages shall be inspected by Contractor upon delivery to the Site. Contractor shall notify Engineer, in writing, if any loss or damage exists to equipment or components. Replace loss and repair damage to new condition in accordance with manufacturer's instructions.

C. Storage and Protection

1. Store materials to permit easy access for inspection and identification. Keep all material off the ground, using pallets, platforms, or other supports. Protect steel members and packaged materials from corrosion and deterioration.

2. Store all equipment in covered storage off the ground and prevent condensation and in accordance with the manufacturer's recommendations for long-term storage.

1.7 WARRANTY

A. Warranty shall be in accordance with Division 1.

B. Any such defects, which occur within the stipulated warranty period, shall be repaired, replaced, or made good at no cost to the Owner.

PART 2 - PRODUCTS

2.1 CHAIN LINK FABRIC

A. Steel chain link fabric shall be 2 inch mesh, 9 gauge wire, black vinyl coated, height as indicated on the Contract Plans, with top and bottom selvage twisted in accordance with the following:

1. Zinc-Coated Steel Fabric: ASTM A392 hot dip galvanized before or after weaving.

   a. Class 2 - 2.0 oz/ft²

2. Polymer Coated Steel Fabric: ASTM F668, wire gauge shall be 9 gauge wire before coating is applied.

   a. Class 2b, fused and adhered

3. Color to be chosen by owner in compliance with ASTM F934.

4. Fabric selvage

   a. Fabric selvage shall be twisted top and bottom, T&T

2.2 STEEL FENCE FRAMEWORK

A. Round steel pipe and rail: ASTM F1043 Group IA Heavy Industrial Fence Framework, schedule 40 galvanized pipe per ASTM F1083. Exterior zinc coating Type A, interior zinc coating Type A, Regular Grade.

1. Line posts shall be 2 7/8 inches outside diameter weighing 5.80 lbs/ft.

2. End, Corner, Pull post shall be 3 1/2 inches outside diameter weighing 7.58 lbs/ft.

3. 3. Top rail and brace rails shall be 1 5/8 inches outside diameter 2.27 lbs/ft.

B. Polymer Coated Framework: Polymer coated framework shall have a PVC coating fused and adhered to the exterior zinc coating of the post or rail. PVC shall have minimum thickness 10-mils per ASTM F1043. Color to match chain link fabric per ASTM F934.

2.3 TENSION WIRE

A. Metallic Coated Steel Marcelled Tension Wire: 7 gauge (0.177 in.) marcelled wire complying with ASTM A824. Match coating type to that of the chain link fabric.

1. Type II Zinc coated class 5 2.0 oz/square ft

B. Polymer Coated Steel Tension Wire: 7 gauge (0.177 in.) (4.50 mm) wire complying with ASTM F1664. Wire gauge specified is the core wire gauge. Match coating class and color to that of the chain link fabric.

1. Class 2b, fused and adhered

2.4 BARBED WIRE

A. Metallic Coated Steel Barbed Wire: Comply with ASTM A121, Design Number12-4-5-14R, double 12-½ gauge (0.099 in.) twisted strand wire, with 4 point 14 gauge (0.080 in.) round barbs spaced 5 inches on center. Match coating type to that of the chain link fabric.

1. Coating Type Z - Zinc-coated: Strand wire coating Type Z, Class 3, 0.80 oz/ft.

B. Polymer Coated Barbed Wire: Comply with ASTM F1665, 0.80 in double twisted strand wire; zinc coated four point, 14 gauge (0.080 in.) barbs spaced 5 inches on center

1. Coating shall be Class 2b fused and adhered.

2.5 FITTINGS

A. Tension and Brace Bands: Galvanized pressed steel complying with ASTM F626, minimum steel thickness of 12 gauge (0.105 in.) minimum width of 3/4 in. and minimum zinc coating of 1.20 oz/ft². Bands shall be supplied with 3/8 in. galvanized steel carriage bolts.

B. Terminal Post Caps, Line Post Loop Tops, Rail and Brace Ends, Boulevard Clamps, Rail Sleeves: In compliance to ASTM F626, pressed steel galvanized after fabrication having a minimum zinc coating of 1.20 oz/ft².

C. Truss Rod Assembly: In compliance with ASTM F626, 3/8 in. diameter steel truss rod with a pressed steel tightener, minimum zinc coating of 1.2 oz/ft², assembly capable of withstanding a tension of 2,000 lbs.

D. Tension Bars: In compliance with ASTM F626. Galvanized steel one-piece length 2 in. less than the fabric height. Minimum zinc coating 1.2 oz. /ft². Bars for 2 in. and 1 ¾ in. mesh shall have a minimum cross section of 3/16 in. by 3/4 in..

E. Barbed Wire Arms: In compliance with ASTM F626, pressed steel galvanized after fabrication, minimum zinc coating of 1.20 oz. /ft², capable of supporting a vertical 250 lb load. Arms shall be type I, three strand 45 degree.

F. Polymer Coated Color Fittings: In compliance with ASTM F626. Polymer coating minimum thickness 0.006 in. fused and adhered to zinc coated fittings. Match color to fence system.

2.6 TIE WIRE and HOG RINGS

A. Tie Wire and Hog Rings: Galvanized minimum zinc coating 1.20 oz/ft² 9 gauge (0.148) steel wire in compliance with ASTM F626. For PVC coated; match the coating, class and color to that of the chain link fabric.

2.7 SWING GATES

A. Swing gate opening size shall be as indicated on the Contract Plans. Galvanized steel welded fabrication shall be in accordance with ASTM F900. Gate frame member shall be 1.90 inch OD in accordance with ASTM F 1043 Group 1A F1083. Schedule 40 pipe.

B. Frame members shall be spaced no greater than 8 feet apart vertically and horizontally. Welded joints shall be protected by applying zinc-rich paint in accordance with ASTM Practice A780.

C. Positive locking gate latch shall be fabricated of 5/16 inch thick by 1 3/4 inch pressed steel galvanized after fabrication.

D. Hinges shall be galvanized malleable iron or heavy gauge galvanized pressed steel post and frame hinges.

E. Fabric shall match fence fabric

F. Gateposts

1. Gate posts shall be 4.5" OD, 10.80 lb/ft ASTM F1043 Group IA ASTM F1083 schedule 40 pipe. Polymer coated gate frames and gateposts; match the coating type and color to that specified for the fence framework. Moveable parts such as hinges, latches and drop rods may be field coated using a liquid polymer touch up.

2.8 CONCRETE

A. Concrete for post footings shall have a 28-day compressive strength of 3000 psi.

PART 3 - EXECUTION

3.1 CLEARING FENCE LINE

A. Contractor shall clear grub grade and remove debris for the fence line as required for the fence installation. The contract drawings indicate the extent of the area to be cleared and grubbed.

3.2 FRAMEWORK INSTALLATION

A. Posts: Posts shall be set plumb in concrete footings in accordance with ASTM F567. Minimum footing depth shall be as indicated on the Contract Plans. Top of post concrete footing to be 2 inches above grade and crowned to shed water away from the post. Line posts shall be installed at intervals not exceeding 10 ft. on center.

B. Top rail posts shall be installed in 21 ft. lengths of rail continuous thru the line post or barb arm loop top. Splice rail using top rail sleeves minimum 6 in. The rail shall be secured to the terminal post by a brace band and rail end. Intermediate rail shall be field cut and secured to the line posts using boulevard bands or rail ends and brace bands.

C. Terminal posts: End, corner, pull and gate posts shall be braced and trussed for fence 6 ft. and higher and for fences 5 ft. in height not having a top rail. The horizontal brace rail and diagonal truss rods shall be installed in accordance with ASTM F567.

D. Tension wire: Shall be installed 4 in. up from the bottom of the fabric. Tension wire to be stretched taut, independently and prior to the fabric, between the terminal posts and secured to the terminal post using a brace band. Secure the tension wire to the chain link fabric with 9 gauge hog rings 18 in. on center and to each line post with a tie wire.

3.3 CHAIN LINK FABRIC INSTALLATION

A. Chain Link Fabric shall be installed to outside of the framework. Attach fabric to the terminal post by threading the tension bar through the fabric; secure the tension bar to the terminal post with tension bands and 5/16 in. carriage bolts spaced no greater than 12 inches on center. Chain link fabric to be stretched taut free of sag. Fabric to be secured to the line post with tie wires spaced no greater than 12 inches on center and to the top rail spaced no greater than18 inches on center. Secure fabric to the tension wire with hog rings spaced no greater than 18 inches apart.

1. Tie wire shall be wrapped around the post or rail and attached to the fabric wire picket on each side by twisting the tie wire around the fabric wire picket two full turns.

OR

2. Tie wire shall be wrapped 360 degrees around the post or rail and the two ends twisted together three full turns.

3. Excess wire shall be cut off and bent over to prevent injury. The installed fabric shall have a ground clearance on no more than 2 inches.

3.4 BARBED WIRE INSTALLATION

Barbed Wire: Stretched taut between terminal posts and secured in the slots provided on the line post barb arms. Attach each strand of barbed wire to the terminal post using a brace band.

3.5 GATE INSTALLATION

A. Swing Gates: Installation of swing gates and gateposts in compliance with ASTM F567. Direction of swing shall be as indicated on the Contract Plans. Gates shall be plumb in the closed position having a bottom clearance of 3 in. grade permitting. Hinge and latch offset opening space from the gate frame to the post shall be no greater than 3 in. in the closed position. Double gate drop bar receivers shall be set in a concrete footing minimum 12 in. diameter 36 in. deep. Gate leaf holdbacks shall be installed for all double gates. Gate leaf hold backs shall be installed in concrete footings minimum 12" in diameter and 36" deep.

3.6 NUTS AND BOLTS

Bolts: Carriage bolts and nuts used for fittings shall be hot dipped galvanized and installed

with the head on the outside of the fence. All bolts shall be peened over to prevent removal of the nut. Nut threads shall be over sized to allow for galvanizing.

3.7 CLEAN UP

Clean Up: The area of the fence line shall be left neat and free of any debris caused by the installation of the fence.

END OF SECTION

SECTION 02920
TURF AND GRASSES

PART 1- GENERAL

1.1 RELATED DOCUMENTS

A. Drawings and general provisions of the Contract, including General and Supplementary Conditions and Division 01 Specification Sections, apply to this Section.

1.2 SUMMARY

A. This section includes the following:

1. Seeding.
2. Hydroseeding.
3. Sodding.
4. Plugging.
5. Sprigging.
6. In some parts of the U.S., meadows may be called "prairies." If needed for clarity, revise the term "meadow" throughout the Section Text or insert a definition.
7. Erosion-control material(s).
8. Grass paving.

1.3 DEFINITIONS

A. Duff Layer: The surface layer of native topsoil that is composed of mostly decayed leaves, twigs, and detritus.

B. Finish Grade: Elevation of finished surface of planting soil.

C. Manufactured Topsoil: Soil produced off-site by homogeneously blending mineral soils or sand with stabilized organic soil amendments to produce topsoil or planting soil.

D. Pesticide: A substance or mixture intended for preventing, destroying, repelling, or mitigating a pest. This includes insecticides, miticides, herbicides, fungicides, rodenticides, and molluscicides. It also includes substances or mixtures intended for use as a plant regulator, defoliant, or desiccant.

E. Pests: Living organisms that occur where they are not desired or that cause damage to plants, animals, or people. These include insects, mites, grubs, mollusks (snails and slugs), rodents (gophers, moles, and mice), unwanted plants (weeds), fungi, bacteria, and

viruses.

F. Planting Soil: Standardized topsoil; existing, native surface topsoil; existing, in-place surface soil; imported topsoil; or manufactured topsoil that is modified with soil amendments and perhaps fertilizers to produce a soil mixture best for plant growth.

G. Subgrade: Surface or elevation of subsoil remaining after excavation is complete, or top surface of a fill or backfill before planting soil is placed.

H. Subsoil: All soil beneath the topsoil layer of the soil profile, and typified by the lack of organic matter and soil organisms.

I. Surface Soil: Soil that is present at the top layer of the existing soil profile at the Project site. In undisturbed areas, the surface soil is typically topsoil, but in disturbed areas such as urban environments, the surface soil can be subsoil.

1.4 QUALITY ASSURANCE

A. Installer qualifications: A qualified landscape installer whose work has resulted in successful sodded lawn installations.

B. Soil-Testing Laboratory Qualifications: An independent laboratory or university laboratory, recognized by the State Department of Agriculture, with the experience and capability to conduct the testing indicated and that specializes in types of tests to be performed.

C. Pre-installation Conference: Conduct conference at Project site to comply with requirements in Division 1 Section "Project Management and Coordination."

1.5 DELIVERY, STORAGE, AND HANDLING

A. Seed and Other Packaged Materials: Deliver packaged materials in original, unopened containers showing weight, certified analysis, name and address of manufacturer, and indication of conformance with state and federal laws, as applicable.

B. Sod: Harvest, deliver, store, and handle sod according to requirements in "Specifications for Turfgrass Sod Materials" and "Specifications for Turfgrass Sod Transplanting and Installation" in TPI's "Guideline Specifications to Turfgrass Sodding." Deliver sod in time for planting within 24 hours of harvesting. Protect sod from breakage and drying.

C. Bulk Materials:

1. Do not dump or store bulk materials near structures, utilities, walkways and pavements, or on existing turf areas or plants.

2. Provide erosion-control measures to prevent erosion or displacement of bulk materials, discharge of soil-bearing water runoff, and airborne dust reaching adjacent properties, water conveyance systems, or walkways.

1.6 SCHEDULING

A. Weather Limitations: Proceed with planting only when existing and forecasted weather conditions permit.

1.7 LAWN MAINTENANCE

A. Initial Turf Maintenance Service: Provide full maintenance by skilled employees of landscape Installer. Maintain as required in Part 3. Begin maintenance immediately after each area is planted and continue until acceptable turf is established but for not less than the following periods:

1. Seeded Turf: 60 days from date of Substantial Completion.
   a. When initial maintenance period has not elapsed before end of planting season, or if turf is not fully established, continue maintenance during next planting season.
2. Sodded Turf: 30 days from date of Substantial Completion.
3. Plugged Turf: 30 days from date of Substantial Completion.
4. Sprigged Turf: 30 days from date of Substantial Completion.

B. Maintain and establish lawn by watering, fertilizing, weeding, mowing, trimming, replanting, and other operations. Roll, regrade, and replant bare or eroded areas and remulch to produce a uniformly smooth lawn:

1. In areas where mulch has been disturbed by wind or maintenance operations, add new mulch. Anchor as required to prevent displacement.

C. Mow lawn as soon as top growth is tall enough to cut. Repeat mowing to maintain specified height without cutting more than 40 percent of grass height. Remove no more than 40 percent of grass-leaf growth in initial or subsequent mowings. Do not delay mowing until grass blades bend over and become matted. Do not mow when grass is wet. Schedule initial and subsequent mowings to maintain the following grass heights.

1. Mow grass 2 to 3 inches (50 to 75 mm) high.

D. Lawn Postfertilization: Apply fertilizer after initial mowing and when grass is dry.

1. Use fertilizer and application rates recommended in Topsoil Analysis.

1.8 MAINTENACE SERVICE

A. Lawns: Sixty days from date of Substantial Completion.

PART 2- PRODUCTS

2.1 SEED

A. Grass Seed: Fresh, clean, dry, new-crop seed complying with AOSA's "Journal of Seed Technology; Rules for Testing Seeds" for purity and germination tolerances.

B. Retain one of first two paragraphs below if specifying grass seed and mixes by species. Retain first paragraph if grass seed is certified by the State Department of Agriculture. Most states have seed-certification agencies. Retain second paragraph if the State Department of Agriculture does not regulate seed germination, purity, and weed seed or if there is no state seed certification. Delete both paragraphs if specifying proprietary grass seed mixes.

C. Seed Species: State-certified seed of grass species as follows:

D. Seed Species: Seed of grass species as follows, with not less than 95 percent germination, not less than 85 percent pure seed, and not more than 0.5 percent weed seed:

1. Full Sun to Partial Shade: Proportioned by weight as follows:

   a. 75 percent Tall Fescue (Festuca arundinacea) varieties, including Jaguar, Mustang, Rebel II, or Olympic.
   b. 15 percent Kentucky Bluegrass (Poa pratensis) varieties, including Medit and South Dakota.
   c. 10 percent Perennial Ryegrass (Lolium perenne).

2. Shade: Proportioned by weight as follows:

   a. 50 percent Chewings red fescue (Festuca rubra spp rubra).
   b. 35 percent Rough Bluegrass (Poa trivialis).
   c. 15 percent redtop (Agrostis alba).

2.2 TURFGRASS SOD

A. Turfgrass Sod: Number 1 Quality/Premium, including limitations on thatch, weeds, diseases, nematodes, and insects, complying with TPI's "Specifications for Turfgrass Sod Materials" in its "Guideline Specifications to Turfgrass Sodding." Furnish viable sod of uniform density, color, and texture, strongly rooted, and capable of vigorous growth and development when planted. Sod shall be from a reputable local dealer.

B. Turfgrass Species: Sod of grass species as follows, with not less than 95 percent germination, not less than 85 percent pure seed, and not more than 0.5 percent weed seed:

1. Full Sun to Shade:

   a. 90 percent Tall Fescue (Festuca arundinacea).
   b. 10 percent Kentucky bluegrass (Poa pratensis).

2.3 INORGANIC SOIL AMENDMENTS

A. Inorganic Soil Amendments: Lime, sulfur, iron sulfate, aluminum sulfate, perlite, agricultural gypsum, sand, diatomaceous earth, and zeolite.

2.4 ORGANIC SOIL AMENDMENTS

A. Compost: Well-composted, stable, and weed-free organic matter, pH range of 5.5 to 8; moisture content 35 to 55 percent by weight; 100 percent passing through 3/4-inch sieve; soluble salt content of 5 to 10 decisiemens/m; not exceeding 0.5 percent inert contaminants and free of substances toxic to plantings; and as follows:

1. Organic Matter Content: 50 to 60 percent of dry weight.

2.5 FERTILIZER

A. Fertilizers: Bonemeal and slow-release fertilizer.

2.6 PLANTING SOILS

A. Planting Soil: Existing, in-place surface soil. Verify suitability of existing surface soil to produce viable planting soil. Remove stones, roots, plants, sod, clods, clay lumps, pockets of coarse sand, concrete slurry, concrete layers or chunks, cement, plaster, building debris, and other extraneous materials harmful to plant growth. Mix surface soil with the following soil amendments per the soils test and recommendations. Use the following amendment materials:

B. Ratio of Loose Compost to Surface Soil by Volume:

C. Ratio of Loose Sphagnum Peat to Surface Soil by Volume:

D. Ratio of Loose Wood Derivatives to Surface Soil by Volume:

E. Weight of Lime per 1000 Sq. Ft..

F. Weight of Sulfur or Iron Sulfate or Aluminum Sulfate per 1000 Sq. Ft..

G. Weight of Agricultural Gypsum per 1000 Sq. Ft..

H. Volume of Sand Plus 10 Percent Diatomaceous Earth or Zeolites per 1000 Sq. Ft..

I. Weight of Bonemeal per 1000 Sq. Ft..

J. Weight of Superphosphate per 1000 Sq. Ft..

K. Weight of Commercial Fertilizer per 1000 Sq. Ft..

L. Weight of Slow-Release Fertilizer per 1000 Sq. Ft..

2.7 MULCHES

A. Mulches: Straw and tackifier for hydroseeded areas.

2.8 PESTICIDES

A. General: Pesticide, registered and approved by EPA, acceptable to authorities having jurisdiction, and of type recommended by manufacturer for each specific problem and as required for Project conditions and application. Do not use restricted pesticides unless authorized in writing by authorities having jurisdiction.

B. Pre-Emergent Herbicide (Selective and Non-Selective): Effective for controlling the germination or growth of weeds within planted areas at the soil level directly below the mulch layer.

C. Post-Emergent Herbicide (Selective and Non-Selective): Effective for controlling weed growth that has already germinated.

2.9 EROSION-CONTROL MATERIALS

A. Erosion-Control Blankets: Biodegradable wood excelsior, straw, or coconut-fiber mat enclosed in a photodegradable plastic mesh. Include manufacturer's recommended steel wire staples, 6 inches long.

B. Erosion-Control Fiber Mesh: Biodegradable burlap or spun-coir mesh, a minimum of 0.92 lb/sq. yd., with 50 to 65 percent open area. Include manufacturer's recommended steel wire staples, 6 inches long.

C. Erosion-Control Mats: Cellular, non-biodegradable slope-stabilization mats designed to isolate and contain small areas of soil over steeply sloped surface, of 3-inch nominal mat thickness. Include manufacturer's recommended anchorage system for slope conditions.

1. Products: Subject to compliance with requirements, available products that may be incorporated into the Work include, but are not limited to, the following:

a. Invisible Structures, Inc.; Slopetame 2.
b. Presto Products Company, a business of Alcoa; Geoweb.
c. Tenax Corporation - USA; Tenweb.

PART 3- EXECUTION

3.1 EXAMINATION

A. Examine areas to be planted for compliance with requirements and other conditions affecting performance.

1. Verify that no foreign or deleterious material or liquid such as paint, paint washout, concrete slurry, concrete layers or chunks, cement, plaster, oils, gasoline, diesel fuel, paint thinner, turpentine, tar, roofing compound, or acid has been deposited in soil within a planting area.

2. Do not mix or place soils and soil amendments in frozen, wet, or muddy conditions.

3. Suspend soil spreading, grading, and tilling operations during periods of excessive soil moisture until the moisture content reaches acceptable levels to attain the required results.

4. Uniformly moisten excessively dry soil that is not workable and which is too dusty.

B. Proceed with installation only after unsatisfactory conditions have been corrected.

C. If contamination by foreign or deleterious material or liquid is present in soil within a planting area, remove the soil and contamination as directed by Architect and replace with new planting soil.

3.2 PREPARATION

A. Protect structures, utilities, sidewalks, pavements, and other facilities, trees, shrubs, and plantings from damage caused by planting operations.

1. Protect adjacent and adjoining areas from hydroseeding and hydromulching overspray.

2. Protect grade stakes set by others until directed to remove them.

B. Install erosion-control measures to prevent erosion or displacement of soils and discharge of soil-bearing water runoff or airborne dust to adjacent properties and walkways

3.3 LAWN PREPARATION

A. Apply inorganic soil amendments, organic soil amendments and fertilizers as recommended in Topsoil Analysis.

B. Finish Grading: Grade planting areas to a smooth, uniform surface plane with loose, uniformly fine texture. Grade to within plus or minus ½ inch of finish elevation.

C. Compaction: Compact growing medium sufficiently to reduce settling but not enough to prevent movement of water through growing medium. Compacted medium should feel firm to foot pressure, leaving only slight heel prints.

D. Moisten prepared lawn areas before planting if soil is dry. Water thoroughly and allow surface to dry before planting. Do not create muddy soil.

E. Restore areas if eroded or otherwise disturbed after finish grading and before planting.

3.4 PREPARATION FOR EROSION-CONTROL MATERIALS

A. Prepare area as specified in Section 3.3 Lawn Preparation.

B. Retain first two paragraphs below for erosion-control matting.

C. For erosion-control mats, install planting soil in two lifts, with second lift equal to thickness of erosion-control mats. Install erosion-control mat and fasten as recommended by material manufacturer.

D. Fill cells of erosion-control mat with planting soil and compact before planting.

E. Retain first paragraph below for erosion-control blanket or mesh.

F. For erosion-control blanket or mesh, install from top of slope, working downward, and as recommended by material manufacturer for site conditions. Fasten as recommended by material manufacturer.

G. Moisten prepared area before planting if surface is dry. Water thoroughly and allow surface to dry before planting. Do not create muddy soil.

3.5 SEEDING

A. Sow seed with spreader or seeding machine. Do not broadcast or drop seed when wind velocity exceeds 5 mph. Evenly distribute seed by sowing equal quantities in two directions at right angles to each other.

1. Do not use wet seed or seed that is moldy or otherwise damaged.

2. Do not seed against existing trees. Limit extent of seed to outside edge of planting saucer.

B. Revise first paragraph below to suit Project. Sowing rates vary with grass species and mixtures.

C. Sow seed at a total rate per manufactures seed type recommendations.

D. Rake seed lightly into top 1/8 inch of soil, roll lightly, and water with fine spray.

E. Protect seeded areas with slopes exceeding 1:3 with erosion-control fiber mesh installed and stapled according to manufacturer's written instructions.

F. Protect seeded areas with erosion-control mats where shown on Drawings; install and anchor according to manufacturer's written instructions.

G. Protect seeded areas with slopes not exceeding 1:6 by spreading straw mulch. Spread uniformly at a minimum rate of 2 tons/acre to form a continuous blanket 1-1/2 inches in loose thickness over seeded areas. Spread by hand, blower, or other suitable equipment.

H. Protection in paragraph below is usually required in warm, dry climates.

I. Protect seeded areas from hot, dry weather or drying winds by applying compost mulch or peat mulch or planting soil within 24 hours after completing seeding operations. Soak areas, scatter mulch uniformly to a thickness of 3/16 inch, and roll surface smooth.

3.6 HYDROSEEDING

A. Hydroseeding: Mix specified seed, fertilizer, and fiber mulch in water, using equipment specifically designed for hydroseed application. Continue mixing until uniformly blended into homogeneous slurry suitable for hydraulic application.

1. Mix slurry with fiber-mulch manufacturer's recommended tackifier.

2. Apply slurry uniformly to all areas to be seeded in a one-step process. Apply slurry at a rate so that mulch component is deposited at not less than 1500-lb/acre dry weight, and seed component is deposited at not less than the specified seed-sowing rate.

3. Apply slurry uniformly to all areas to be seeded in a two-step process. Apply first slurry coat at a rate so that mulch component is deposited at not less than 500-lb/acre dry weight, and seed component is deposited at not less than the specified seed-sowing rate. Apply slurry cover coat of fiber mulch (hydromulching) at a rate of 1000 lb/acre.

3.7 SODDING

A. Lay sod within 24 hours of harvesting. Do not lay sod if dormant or if ground is frozen or muddy.

B. Lay sod to form a solid mass with tightly fitted joints. Butt ends and sides of sod; do not stretch or overlap. Stagger sod strips or pads to offset joints in adjacent courses. Avoid damage to growth media layer or sod during installation. Tamp and roll lightly to ensure contact with growth medium layer, eliminate air pocket, and form a smooth surface. Work growth medium or fine sand into minor cracks between pieces of sod; remove excess to avoid smothering sod and adjacent grass.

C. Saturate sod with fine water spray within two hours of planting. During first week, water daily or more frequently as necessary to maintain moist soil to a minimum depth of 1-1/2 inches below sod.

3.8 TURF MAINTENANCE

A. Maintain and establish turf by watering, fertilizing, weeding, mowing, trimming, replanting, and performing other operations as required to establish healthy, viable turf. Roll, regrade, and replant bare or eroded areas and remulch to produce a uniformly smooth turf. Provide materials and installation the same as those used in the original installation.

1. Fill in as necessary soil subsidence that may occur because of settling or other processes. Replace materials and turf damaged or lost in areas of subsidence.

2. In areas where mulch has been disturbed by wind or maintenance operations, add new mulch and anchor as required to prevent displacement.

3. Apply treatments as required to keep turf and soil free of pests and pathogens or disease. Use integrated pest management practices whenever possible to mini-

mize the use of pesticides and reduce hazards.

B. Watering.

1. Adjacent to Training and Maintenance Buildings: Install and maintain temporary piping, hoses, and turf-watering equipment to convey water from sources and to keep turf uniformly moist to a depth of 4 inches.

   a. Schedule watering to prevent wilting, puddling, erosion, and displacement of seed or mulch. Lay out temporary watering system to avoid walking over muddy or newly planted areas.
   b. Water turf with fine spray at a minimum rate of 1 inch per week unless rainfall precipitation is adequate.

2. All other areas.

   a. Schedule watering to prevent wilting, puddling, erosion, and displacement of seed or mulch.

C. Mow turf as soon as top growth is tall enough to cut. Repeat mowing to maintain specified height without cutting more than 1/3 of grass height. Remove no more than 1/3 of grass-leaf growth in initial or subsequent mowings. Do not delay mowing until grass blades bend over and become matted. Do not mow when grass is wet. Revise timing of fertilizer application in paragraph below if a slow-release fertilizer was initially applied.

D. Turf Postfertilization: Apply fertilizer after initial mowing and when grass is dry.

1. Use fertilizer that will provide actual nitrogen of at least 1 lb/1000 sq. ft. to turf area.

3.9 SATISFACTORY TURF

A. Turf installations shall meet the following criteria as determined by Engineer:

1. Satisfactory Seeded Turf: At end of maintenance period, a healthy, uniform, close stand of grass has been established, free of weeds and surface irregularities.

2. Satisfactory Sodded Turf: At end of maintenance period, a healthy, well-rooted, even-colored, viable turf has been established, free of weeds, open joints, bare areas, and surface irregularities.

3. Satisfactory Plugged Turf: At end of maintenance period, the required number of plugs has been established as well-rooted, viable patches of grass, and areas between plugs are free of weeds and other undesirable vegetation.

4. Satisfactory Sprigged Turf: At end of maintenance period, the required number of sprigs has been established as well-rooted, viable plants, and areas between sprigs are free of weeds and other undesirable vegetation.

B. Use specified materials to reestablish turf that does not comply with requirements and continue maintenance until turf is satisfactory.

3.10 PESTICIDE APPLICATION

A. Apply pesticides and other chemical products and biological control agents in accordance with requirements of authorities having jurisdiction and manufacturer's written recommendations. Coordinate applications with Owner's operations and others in proximity to the Work. Notify Owner before each application is performed.

B. Post-Emergent Herbicides (Selective and Non-Selective): Apply only as necessary to treat already-germinated weeds and in accordance with manufacturer's written recommendations.

3.11 CLEANUP AND PROTECTION

A. Promptly remove growth medium and debris created by lawn work from paved areas. Clean wheels of vehicles before leaving site to avoid tracking soil onto roads, walks, or other paved areas.

B. Erect barricades and warning signs as required to protect newly planted areas from traffic. Maintain barricades throughout maintenance period and remove after lawn is established.

C. Remove temporary erosion-control measures after grass establishment period.

END OF SECTION

SECTION 03240
ADHESIVE ANCHORS

PART 1 - GENERAL

1.1 SUMMARY

A. All anchor bolts embedded in concrete shall be of the epoxy adhesive type whether specifically called out on the drawings or not. No expansion type, "red head" or any type of insert will be allowed without approval of the owner.

1.2 SUBMITTALS

A. Submittals shall be in accordance with Division 1.

PART 2 - PRODUCTS

2.1 CAPSULE ADHESIVE ANCHORING SYSTEM

A. Capsule adhesive anchor system shall consist of an all-thread rod, nut, washer and adhesive capsule.

B. Anchor rod shall be provided with a 45 degree chisel or cut point to provide proper mixing of the adhesive components. Anchor rods shall be manufactured to meet the following requirements of AISI 316 stainless steel meeting the mechanical requirements of ASTM F 593. Washers of nuts shall meet the same requirements as the rods. Rods, washers and nuts shall be furnished by the system manufacturer for compatibility with the system.

C. The adhesive capsules shall consist of a dual chamber foil capsule. The resin material shall be vinyl urethane methacrylate.

D. System shall be Hilti HVA Capsule Adhesive Anchoring System or approved equal.

2.2 INJECTABLE ANCHORING SYSTEM

A. Injectable adhesive anchoring system shall consist of an all-thread rod, nut, washer and a two component epoxy adhesive.

B. Anchor rods shall be furnished with chamfered ends so that either end will accept a nut and washer. Alternatively, anchor rods shall be furnished with a 45 degree chisel point on one end to allow for easy insertion into the adhesive filled hole. Anchor rods shall be manufactured to meet the following requirements of AISI 316 stainless steel meeting the mechanical requirements of ASTM F 593. Washers of nuts shall meet the same requirements as the rods. Rods, washers and nuts shall be furnished by the system manufacturer for compatibility with the system.

C. Injection adhesive is a hybrid adhesive consisting of a methacrylate resin, hardener, cement

and water. The system consists of adhesive refill packs, a mixing nozzle and, a dispenser.

D. Injection adhesive shall be Hilti HIT-HY 200 or HIT-ICE.

PART 3 - EXECUTION

3.1 INSTALLATION

A. Capsule Adhesive Anchoring System

1. Adhesive anchors shall be installed in holes drilled using the specified diameter carbide tipped drill bit or matched tolerance diamond core bit.

2. Hole depth shall be as indicated in the manufacturer's instructions

3. Hole must be cleaned to remove dust, debris, water, oil, chemicals and any other foreign matter or contaminants.

4. Place the capsule or capsules in hole. Ensure the capsule is inserted in the direction indicated on the capsule.

5. Using the setting tool on the rotary hammer drill, drive the rod in to the prescribed depth, Stop the drill immediately after the prescribed depth is reached. Do not disturb the anchor until the adhesive has fully cured.

6. After the adhesive has cured the anchor may be put in service. Do not over torque the rod.

B. Injectable Adhesive Anchoring System

1. Anchor holes shall be drilled with a carbide bit. Contact Manufacturer for drilling holes with a diamond bit.

2. Hole must be cleaned to remove dust, debris, water, oil, chemicals and any other foreign matter or contaminants.

3. Using the dispenser with static mixer inject adhesive into hole.

4. Install rod and allow adhesive to cure.

5. After the adhesive has cured the anchor may be put in service. Do not over torque the rod.

C. All anchors shall be installed in strict accordance with manufacturer's instructions.

D. Minimum Embedment depths shall be:

Anchor Bolt Dia.	Embedment Depth
1. 3/8"	3-1/2"
2. 1/2"	4-1/4"
3. 5/8"	5"
4. 3/4"	6-5/8"
5. 7/8"	7-1/2"
6. 1"	8-1/4"

END OF SECTION

SECTION 03300
CAST-IN-PLACE CONCRETE

PART 1 - GENERAL

1.1 RELATED DOCUMENTS

A. Drawings and general provisions of the Contract, including General and Supplementary Conditions and Division 1 Specification Sections, apply to this Section.

1.2 SUMMARY

A. This Section specifies cast-in place concrete, including formwork, reinforcement, concrete materials, mixture design, placement procedures, and finishes, for the following:

1. Interior Slab-on-grade
2. Exterior Concrete Pavement.
3. Exterior equipment pads.
4. Footings.
5. Foundation Walls.

1.3 SUBMITTALS

A. Product Data: For each type of product indicated.

B. Design Mixtures: For each concrete mixture. Submit alternate design mixtures when characteristics of materials, Project conditions, weather, test results, or other circumstances warrant adjustments. Indicate amounts of mixing water to be withheld for later addition at Project site.

C. Steel Reinforcement Shop Drawings: Placing drawings that detail fabrication, bending, and placement. Include bar sizes, lengths, material, grade, bar schedules, stirrup spacing, bent bar diagrams, bar arrangement, splices and laps, mechanical connections, tie spacing, hoop spacing, and supports for concrete reinforcement.

D. Material Test Reports: For the following, from a qualified testing agency, indicating compliance with requirements:

1. Aggregates. Include service record data indicating absence of deleterious expansion of concrete due to alkali aggregate reactivity.

E. Material Certificates: For each of the following, signed by manufacturers:

1. Cementitious materials.
2. Admixtures.
3. Form materials and form-release agents.
4. Steel reinforcement and accessories.

5. Vapor Barriers.
6. Curing compounds.
7. Bonding agents.
8. Adhesives.
9. Repair materials.

1.4 QUALITY ASSURANCE

A. Installer Qualifications: An experienced installer who has completed concrete Work similar in material, design, and extent to that indicated for this Project and whose work has resulted in construction with a record of successful in-service performance.

B. Manufacturer Qualifications: A firm experienced in manufacturing ready-mixed concrete products and that complies with ASTM C 94 requirements for production facilities and equipment.

1. Manufacturer certified according to NRMCA's "Certification of Ready Mixed Concrete Production Facilities."

C. Testing Agency Qualifications: An independent agency qualified according to ASTM C 1077 and ASTM E 329 for testing indicated, as documented according to ASTM E 548.

1. Personnel conducting field tests shall be qualified as ACI Concrete Field Testing Technician, Grade 1, according to ACI CP-01 or an equivalent certification program.
2. Personnel performing laboratory tests shall be ACI-certified Concrete Strength Testing Technician and Concrete Laboratory Testing Technician - Grade I. Testing Agency laboratory supervisor shall be an ACI-certified Concrete Laboratory Testing Technician - Grade II.

D. Source Limitations: Obtain each type or class of cementitious material of the same brand from the same manufacturer's plant, obtain aggregate from one source, and obtain admixtures through one source from a single manufacturer.

E. ACI Publications: Comply with the following unless modified by requirements in the Contract Documents:

1. ACI 301, "Specification for Structural Concrete,"
2. ACI 117, "Specifications for Tolerances for Concrete Construction and Materials."

F. Concrete Testing Service: Engage a qualified independent testing agency to perform material evaluation tests and to design concrete mixtures.

1.5 DELIVERY, STORAGE, AND HANDLING

A. Steel Reinforcement: Deliver, store, and handle steel reinforcement to prevent bending and damage.

PART 2 - PRODUCTS

2.1 MANUFACTURERS

A. In other Part 2 articles where titles below introduce lists, the following requirements apply to product selection:

1. Available Products: Subject to compliance with requirements, products that may be incorporated into the Work include, but are not limited to, products specified.
2. Available Manufacturers: Subject to compliance with requirements, manufacturers offering products that may be incorporated into the Work include, but are not limited to, manufacturers specified.

2.2 FORM-FACING MATERIALS

A. Smooth-Formed Finished Concrete: Form-facing panels that will provide continuous, true, and smooth concrete surfaces. Furnish in largest practicable sizes to minimize number of joints.

1. Exterior-grade plywood panels, suitable for concrete forms, complying with DOC PS 1, and as follows:

a. Medium-density overlay, Class 1 or better; mill-release agent treated and edge sealed.

B. Rough-Formed Finished Concrete: Plywood, lumber, metal, or another approved material. Provide lumber dressed on at least two edges and one side for tight fit.

C. Chamfer Strips: Wood, metal, PVC, or rubber strips, 3/4 by 3/4 inch, minimum.

D. Form-Release Agent: Commercially formulated form-release agent that will not bond with, stain, or adversely affect concrete surfaces and will not impair subsequent treatments of concrete surfaces. Formulate form-release agent with rust inhibitor for steel form-facing materials.

E. Form Ties: Factory-fabricated, removable or snap-off metal or glass-fiber-reinforced plastic form ties designed to resist lateral pressure of fresh concrete on forms and to prevent spalling of concrete on removal.

1. Furnish units that will leave no corrodible metal closer than 1 inch to the plane of exposed concrete surface.
2. Furnish ties that, when removed, will leave holes no larger than 1 inch in diameter in concrete surface.

2.3 STEEL REINFORCEMENT

A. Reinforcing Bars: ASTM A 615, Grade 60, deformed.

B. Plain-Steel Wire: ASTM A 82.

C. Deformed-Steel Wire: ASTM A 496.

D. Plain-Steel Welded Wire Reinforcement: ASTM A 185, plain, fabricated from as-drawn steel wire into flat sheets.

2.4 REINFORCEMENT ACCESSORIES

A. Joint Dowel Bars: ASTM A 615, Grade 60, plain-steel bars, cut bars true to length with ends square and free of burrs.

B. Bar Supports: Bolsters, chairs, spacers, and other devices for spacing, supporting, and fastening reinforcing bars and welded wire reinforcement in place. Manufacture bar supports from steel wire, plastic, or precast concrete according to CRSI's "Manual of Standard Practice," of greater compressive strength than concrete and as follows:

1. For concrete surfaces exposed to view where legs of wire bar supports contact forms, use CRSI Class 1 plastic-protected steel wire or CRSI Class 2 stainless-steel bar supports.

2.5 CONCRETE MATERIALS

A. Cementitious Material: Use the following cementitious materials, of the same type, brand, and source, throughout Project:

1. Portland Cement: ASTM C 150, Type I/II.

a. Fly Ash: ASTM C 618, Class F.

B. Normal-Weight Aggregates: ASTM C 33, Class 4S coarse aggregate or better, graded. Provide aggregates from a single source.

1. Maximum Coarse-Aggregate Size: 1 inch nominal unless noted otherwise. Use 3/4 inch nominal at floor slabs.
2. Fine Aggregate: Fine aggregate shall comply with ASTM C 33 and as herein specified. Free of materials with deleterious reactivity to alkali in cement.

C. Water: ASTM C 94 and potable. Clean, not detrimental to concrete and free from deleterious amounts of acids, alkali or organic materials.

2.6 ADMIXTURES

A. Air-Entraining Admixture: ASTM C 260.

B. Chemical Admixtures: Provide admixtures certified by manufacturer to be compatible with other admixtures and that will not contribute water-soluble chloride ions exceeding those permitted in hardened concrete. Do not use calcium chloride or admixtures containing calcium chloride.

1. Water-Reducing Admixture: ASTM C 494, Type A.
2. Retarding Admixture: ASTM C 494, Type B.
3. Water-Reducing and Retarding Admixture: ASTM C 494, Type D.
4. High-Range, Water-Reducing Admixture: ASTM C 494, Type F.

5. High-Range, Water-Reducing and Retarding Admixture: ASTM C 494, Type G.
6. Plasticizing and Retarding Admixture: ASTM C 1017, Type II.

2.7 VAPOR BARRIERS

A. Sheet Vapor Barrier: ASTM E 1745, Class A with a Perm Rating less than or equal to 0.018 perms (grains / (ft^2 *hr *in. Hg)) as tested by ASTM E 96.

1. Products: Subject to compliance with requirements, available products that may be incorporated into the Work include, but are not limited to, the following:

a. Reef Industries; Vaporguard.
b. Stego Industries; LLC; Stego Wrap (15 mil).
c. W.R. Meadows; Perminator (15 mil).

B. Vapor Barrier Accessories:

1. Seal Tape: Water vapor transmission rate per ASTM E 96 of 0.3 perms or less.
2. Vapor Proofing Mastic: Water vapor transmission rate per ASTM E 96 of 0.3 perms or less.
3. Pipe Boots: Construct pipe boots from vapor barrier material, pressure sensitive tape and/or mastic per manufacturer's instructions.

2.8 CURING MATERIALS

A. Evaporation Retarder: Waterborne, monomolecular film forming, manufactured for application to fresh concrete.

1. Available Products:

a. Axim Concrete Technologies; Cimfilm.
b. Burke by Edoco; BurkeFilm.
c. ChemMasters; Spray-Film.
d. Dayton Superior Corporation; Sure Film.
e. Euclid Chemical Company (The); Eucobar.
f. Kaufman Products, Inc.; Vapor Aid.
g. Lambert Corporation; Lambco Skin.
h. MBT Protection and Repair, Div. of ChemRex; Confilm.
i. Meadows, W. R., Inc.; Sealtight Evapre.
j. Metalcrete Industries; Waterhold.
k. Sika Corporation, Inc.; SikaFilm.
l. Symons Corporation, a Dayton Superior Company; Finishing Aid.
m. Vexcon Chemicals, Inc.; Certi-Vex EnvioAssist.
n. Or approved equal.

B. Moisture-Retaining Cover: ASTM C 171, polyethylene film or white burlap-polyethylene sheet.

C. Water: Potable.

D. Clear, Waterborne, Membrane-Forming Curing Compound: ASTM C 309, Type 1, Class B, dissipating.

1. Available Products:

a. Anti-Hydro International, Inc.; AH Curing Compound #2 DR WB.
b. Burke by Edoco; Aqua Resin Cure.
c. ChemMasters; Safe-Cure Clear.
d. Dayton Superior Corporation; Day Chem Rez Cure (J-11-W).
e. Euclid Chemical Company (The); Kurez DR VOX.
f. Kaufman Products, Inc.; Thinfilm 420.
g. L&M Construction Chemicals, Inc.; L&M Cure R.
h. Meadows, W. R., Inc.; 1100 Clear.
i. Symons Corporation, a Dayton Superior Company; Resi-Chem Clear Cure.
j. Tamms Industries, Inc.; Horncure WB 30.
k. Vexcon Chemicals, Inc.; Certi-Vex Enviocure 100.
l. Or approved equal.

E. Clear, Waterborne, Membrane-Forming Curing and Sealing Compound: ASTM C 1315, Type 1, Class A.

1. Available Products:

a. Burke by Edoco; Cureseal 1315 WB.
b. ChemMasters; Polyseal WB.
c. Euclid Chemical Company (The); Super Diamond Clear VOX.
d. Kaufman Products, Inc.; Sure Cure 25 Emulsion.
e. L&M Construction Chemicals, Inc.; Lumiseal WB Plus.
f. Meadows, W. R., Inc.; Vocomp-30.
g. Metalcrete Industries; Metcure 30.
h. Symons Corporation, a Dayton Superior Company; Cure & Seal 31 Percent E.
i. Tamms Industries, Inc.; LusterSeal WB 300.
j. Unitex; Hydro Seal 25.
k. Vexcon Chemicals, Inc.; Vexcon Starseal 1315.
l. Or approved equal.

2.9 RELATED MATERIALS

A. Expansion- and Isolation-Joint-Filler Strips: ASTM D 1751, asphalt-saturated cellulosic fiber.

B. Semirigid Joint Filler: Two-component, semirigid, 100 percent solids, epoxy resin with a Type A shore durometer hardness of 80 per ASTM D 2240.

C. Bonding Agent: ASTM C 1059, Type II, non-redispersible, acrylic emulsion or styrene butadiene.

D. Epoxy Bonding Adhesive: ASTM C 881, two-component epoxy resin, capable of humid curing and bonding to damp surfaces, of class suitable for application temperature and of grade to suit requirements, and as follows:

1. Types IV and V, load bearing, for bonding hardened or freshly mixed concrete to hardened concrete.

E. High-Strength Epoxy Doweling System: Epoxy doweling system shall consist of an injectable two-part epoxy complying with the requirements of ASTM C881-90, Type IV, Grade 3, Class B and C except gel times. Epoxy doweling system shall be tested in accordance with ICC Acceptance Criteria 308 demonstrating compliance with the performance features of ACI 355. The epoxy doweling system shall be installed according to manufacturer's instructions.

1. Available Products:

a. Hilti HIT-HY 200 Epoxy Adhesive Anchoring System (ICC ESR-3187)
b. Powers AC100+ Gold Adhesive Anchor System (ICC ESR-2582)
c. Simpson Strong-Tie SET-XP Epoxy Adhesive Anchors (Use of SET-PAC system not allowed). (ICC ESR-2508).
d. Or approved equal.

F. Expansion Wedge Anchors: Expansion wedge anchors shall consist of threaded stud bolt body and integral wedge expander, nut, and washer complying with the requirements of Federal Specification A-A 1923A, Type 4. Expansion wedge anchors shall be tested in accordance with ICC Acceptance Criteria 193 demonstrating compliance with the performance features of ACI 355.2. Expansion wedge anchors shall have an ICC-ES Evaluation Report (ESR) indicating it is intended for use in both cracked and uncracked normal weight concrete in Seismic Design Categories A through F. Anchors shall be made of zinc-plated carbon steel meeting ASTM B633 or Type 304 stainless steel.

1. Available Products:

a. Hilti Kwik Bolt TZ Carbon and Stainless Steel Anchors (ICC ESR-1917)
b. Powers Power-Stud+ SD1/SD2 Anchor (ICC ESR-2818/ESR-2502/)
c. Simpson STRONG-BOLT/STRONG-BOLT 2 Wedge Anchor (ICC ESR-1771/ESR-3037)
d. Or approved equal.

2.10 REPAIR MATERIALS

A. Repair Underlayment: Cement-based, polymer-modified, self-leveling product that can be applied in thicknesses from 1/8 inch and that can be feathered at edges to match adjacent slab elevations.

1. Cement Binder: ASTM C 150, portland cement or hydraulic or blended hydraulic cement as defined in ASTM C 219.
2. Primer: Product of underlayment manufacturer recommended for substrate, conditions, and application.

3. Aggregate: Well-graded, washed gravel, 1/8 to 1/4 inch or coarse sand as recommended by underlayment manufacturer.
4. Compressive Strength: Not less than 5000 psi at 28 days when tested according to ASTM C 109.

B. Repair Overlayment: Cement-based, polymer-modified, self-leveling product that can be applied in thicknesses from 1/8 inch and that can be feathered at edges to match adjacent slab elevations.

1. Cement Binder: ASTM C 150, portland cement or hydraulic or blended hydraulic cement as defined in ASTM C 219.
2. Primer: Product of topping manufacturer recommended for substrate, conditions, and application.
3. Aggregate: Well-graded, washed gravel, 1/8 to 1/4 inch or coarse sand as recommended by topping manufacturer.
4. Compressive Strength: Not less than 5000 psi at 28 days when tested according to ASTM C 109.

2.11 CONCRETE MIXTURES, GENERAL

A. Prepare design mixtures for each type and strength of concrete, proportioned on the basis of laboratory trial mixture or field test data, or both, according to ACI 301.

1. Use a qualified independent testing agency for preparing and reporting proposed mixture designs based on laboratory trial mixtures.

B. Cementitious Materials: Limit percentage, by weight, of cementitious materials other than portland cement in concrete as follows:

1. Fly Ash: 20 percent.

C. Limit water-soluble, chloride-ion content in hardened concrete to 0.10 percent by weight of cement.

D. Admixtures: Use admixtures according to manufacturer's written instructions.

1. Use water-reducing, high-range water-reducing, or plasticizing admixture in concrete, as required, for placement and workability.
2. Use water-reducing and retarding admixture when required by high temperatures, low humidity, or other adverse placement conditions, including vertical wall placements with a height to width ratio greater than 12.
3. Use water-reducing admixture in pumped concrete, concrete required to be watertight, and concrete with a water-cementitious materials ratio below 0.50.

2.12 CONCRETE MIXTURES FOR STRUCTURAL ELEMENTS

A. Exterior equipment pads and pavement: Proportion normal-weight concrete mixture as follows:

1. Minimum Compressive Strength: 4,500 psi.

2. Maximum Water-Cementitious Materials Ratio: 0.50.
3. Slump Limit: 3 to 5 inches.
4. Air Content: 6 percent, plus or minus 1.5 percent at point of delivery for 1-inch nominal maximum aggregate size.

B. Interior Slab-on-grade and Formed Walls: Proportion normal-weight concrete mixture as follows:

1. Minimum Compressive Strength: 4,000 psi.
2. Maximum Water-Cementitious Materials Ratio: 0.45.
3. Slump Limit: 3 to 5 inches.
4. Air Content: 6 percent, plus or minus 1.5 percent at point of delivery for 1-inch nominal maximum aggregate size.

C. Footings: Proportion normal-weight concrete mixture as follows:

1. Minimum Compressive Strength: 4,000 psi at 28 days.
2. Maximum Water-Cementitious Materials Ratio: 0.45.
3. Slump Limit for Vibrated Concrete: 3 to 5 inches.
4. Air Content: 3 percent, plus or minus 1.5 percent at point of delivery for 1-inch nominal maximum aggregate size.

2.13 FABRICATING REINFORCEMENT

A. Fabricate steel reinforcement according to CRSI's "Manual of Standard Practice."

2.14 CONCRETE MIXING

A. Ready-Mixed Concrete: Measure, batch, mix, and deliver concrete according to ASTM C 94, and furnish batch ticket information.

1. When air temperature is between 85 and 90 deg F, reduce mixing and delivery time from 1-1/2 hours to 75 minutes; when air temperature is above 90 deg F, reduce mixing and delivery time to 60 minutes.

2. Provide one copy of delivery ticket with the following information: Batch weights for each mix component, batch time, concrete plant location, and volume of water withheld (in gallons).

B. Project-Site Mixing: Not Permitted.

PART 3 - EXECUTION

3.1 FORMWORK

A. Design, erect, shore, brace, and maintain formwork, according to ACI 301, to support vertical, lateral, static, and dynamic loads, and construction loads that might be applied, until structure can support such loads.

B. Construct formwork so concrete members and structures are of size, shape, alignment, elevation, and position indicated, within tolerance limits of ACI 117.

C. Limit concrete surface irregularities, designated by ACI 347R as abrupt or gradual, as follows:

1. Class A, 1/8 inch for smooth-formed finished surfaces.
2. Class C, 1/2 inch for rough-formed finished surfaces.

D. Construct forms tight enough to prevent loss of concrete mortar.

E. Fabricate forms for easy removal without hammering or prying against concrete surfaces. Provide crush or wrecking plates where stripping may damage cast concrete surfaces. Provide top forms for inclined surfaces steeper than 1.5 horizontal to 1 vertical.

1. Install keyways, recesses, and the like, for easy removal.
2. Do not use rust-stained steel form-facing material.

F. Set edge forms, bulkheads, and intermediate screed strips for slabs to achieve required elevations and slopes in finished concrete surfaces. Provide and secure units to support screed strips; use strike-off templates or compacting-type screeds.

G. Provide temporary openings for cleanouts and inspection ports where interior area of formwork is inaccessible. Close openings with panels tightly fitted to forms and securely braced to prevent loss of concrete mortar. Locate temporary openings in forms at inconspicuous locations.

H. Chamfer exterior corners and edges of permanently exposed concrete.

I. Form openings, chases, offsets, sinkages, keyways, blocking, screeds, and bulkheads required in the Work. Determine sizes and locations from trades providing such items.

J. Clean forms and adjacent surfaces to receive concrete. Remove chips, wood, sawdust, dirt, and other debris just before placing concrete.

K. Retighten forms and bracing before placing concrete, as required, to prevent mortar leaks and maintain proper alignment.

L. Coat contact surfaces of forms with form-release agent, according to manufacturer's written instructions, before placing reinforcement.

3.2 EMBEDDED ITEMS

A. Place and secure anchorage devices and other embedded items required for adjoining work that is attached to or supported by cast-in-place concrete. Use setting drawings, templates, diagrams, instructions, and directions furnished with items to be embedded.

1. Install anchor rods, accurately located, to elevations required and complying with tolerances in Section 7.5 of AISC's "Code of Standard Practice for Steel Buildings and Bridges."

2. Install dovetail anchor slots in concrete structures as indicated.

3.3 REMOVING AND REUSING FORMS

A. General: Formwork for sides of beams, walls, and similar parts of the Work that does not support weight of concrete may be removed after cumulatively curing at not less than 50 deg F 12 hours after placing concrete, if concrete is hard enough to not be damaged by form-removal operations and curing and protection operations are maintained.

B. Clean and repair surfaces of forms to be reused in the Work. Split, frayed, delaminated, or otherwise damaged form-facing material will not be acceptable for exposed surfaces. Apply new form-release agent.

C. When forms are reused, clean surfaces, remove fins and laitance, and tighten to close joints. Align and secure joints to avoid offsets. Do not use patched forms for exposed concrete surfaces unless approved by Engineer.

3.4 VAPOR BARRIERS

A. Plastic Vapor Barriers: Place, protect, and repair vapor retarders according to ASTM E 1643 and manufacturer's written instructions. Lap joints 6 inches and seal with manufacturer's recommended tape.

3.5 STEEL REINFORCEMENT

A. General: Comply with CRSI's "Manual of Standard Practice" for placing reinforcement.

1. Do not cut or puncture vapor retarder. Repair damage and reseal vapor retarder before placing concrete.

B. Clean reinforcement of loose rust and mill scale, earth, ice, and other foreign materials that would reduce bond to concrete.

C. Accurately position, support, and secure reinforcement against displacement. Locate and support reinforcement with bar supports to maintain minimum concrete cover. Do not tack weld crossing reinforcing bars.

D. Set wire ties with ends directed into concrete, not toward exposed concrete surfaces.

E. Install welded wire reinforcement in longest practicable lengths on bar supports spaced to minimize sagging. Lap edges and ends of adjoining sheets at least one mesh spacing. Offset laps of adjoining sheet widths to prevent continuous laps in either direction. Lace overlaps with wire.

3.6 JOINTS

A. General: Construct joints true to line with faces perpendicular to surface plane of concrete.

B. Construction Joints: Install so strength and appearance of concrete are not impaired, at locations indicated or as approved by Engineer.

1. Unless indicated otherwise on the drawings or approved by the Engineer, the unit of operation shall not exceed 30 feet in any horizontal direction. Concrete shall be placed continuously so the unit will be monolithic in construction. At least 7 days shall elapse between the casting of adjoining units unless approved by the Engineer.
2. Place joints perpendicular to main reinforcement. Continue reinforcement across construction joints, unless otherwise indicated. Do not continue reinforcement through sides of strip placements of floors and slabs.
3. Unless indicated otherwise, provide keyways at least 1-1/2 inches deep in construction joints in walls and slabs and between walls and footings. Bulkheads designed and accepted for purposed may be used.
4. Locate horizontal joints in walls and columns at underside of floors, slabs, beams, and girders and at the top of footings or floor slabs.
5. Use epoxy-bonding adhesive at locations where fresh concrete is placed against hardened or partially hardened concrete surfaces.
6. Provide waterstops in construction joints as indicated. Install waterstops to form a continuous diaphragm in each joint. Support and protect exposed waterstops during progress of work. Field fabricate joints in waterstops according to manufacturer's printed instructions.

C. Contraction Joints in Slabs-on-Grade: Form weakened-plane contraction joints, sectioning concrete into areas as indicated. Construct contraction joints for a depth equal to at least one-fourth of concrete thickness as follows:

1. Grooved Joints: Form contraction joints after initial floating by grooving and finishing each edge of joint to a radius of 1/8 inch. Repeat grooving of contraction joints after applying surface finishes. Eliminate groover tool marks on concrete surfaces.
2. Sawed Joints: Form contraction joints with power saws equipped with shatterproof abrasive or diamond-rimmed blades. Cut 1/8-inch-wide joints into concrete when cutting action will not tear, abrade, or otherwise damage surface and before concrete develops random contraction cracks.

D. Isolation Joints in Slabs-on-Grade: After removing formwork, install joint-filler strips at slab junctions with vertical surfaces, such as column pedestals, foundation walls, grade beams, and other locations, as indicated.

1. Extend joint-filler strips full width and depth of joint, terminating flush with finished concrete surface, unless otherwise indicated.
2. Install joint-filler strips in lengths as long as practicable. Where more than one length is required, lace or clip sections together.

E. Doweled Joints: Install dowel bars and support assemblies at joints where indicated. Lubricate or asphalt coat one-half of dowel length to prevent concrete bonding to one side of joint.

3.7 CONCRETE BONDING

A. General: Before depositing new concrete on or against concrete which has set, the existing surfaces shall be thoroughly roughened in a manner to uniformly expose the bonding aggregate. The existing surface shall be cleaned of all laitance, foreign matter, and loose particles.

B. Apply epoxy adhesive bonding agent to roughened concrete surface per the epoxy adhesive manufacturer's instructions. Handle, store, and mix the epoxy adhesive agent carefully and in compliance with manufacturer's instructions. Place fresh concrete on bonding agent within allowable time limit set by manufacturer's instructions.

3.8 CONCRETE PLACEMENT

A. Before placing concrete, verify that installation of formwork, reinforcement, and embedded items is complete and that required inspections have been performed.

B. Before test sampling and placing concrete, water may be added at Project site, subject to limitations of ACI 301.

1. Do not add water to concrete after adding high-range water-reducing admixtures to mixture.

C. Deposit concrete continuously in one layer or in horizontal layers of such thickness that no new concrete will be placed on concrete that has hardened enough to cause seams or planes of weakness. If a section cannot be placed continuously, provide construction joints as indicated. Deposit concrete to avoid segregation.

1. Deposit concrete in horizontal layers of depth to not exceed formwork design pressures and in a manner to avoid inclined construction joints.
2. Consolidate placed concrete with mechanical vibrating equipment according to ACI 301. Contractor shall maintain two fully functioning vibrators at all times at the project site.
3. Do not use vibrators to transport concrete inside forms. Insert and withdraw vibrators vertically at uniformly spaced locations to rapidly penetrate placed layer and at least 6 inches into preceding layer. Do not insert vibrators into lower layers of concrete that have begun to lose plasticity. At each insertion, limit duration of vibration to time necessary to consolidate concrete and complete embedment of reinforcement and other embedded items without causing mixture constituents to segregate.

D. Deposit and consolidate concrete for floors and slabs in a continuous operation, within limits of construction joints, until placement of a panel or section is complete.

1. Consolidate concrete during placement operations so concrete is thoroughly worked around reinforcement and other embedded items and into corners.
2. Maintain reinforcement in position on chairs during concrete placement.
3. Screed slab surfaces with a straightedge and strike off to correct elevations.
4. Slope surfaces uniformly to drains where required.

5. Begin initial floating using bull floats or darbies to form a uniform and open-textured surface plane, before excess bleedwater appears on the surface. Do not further disturb slab surfaces before starting finishing operations.

E. Cold-Weather Placement: Comply with ACI 306.1 and as follows. Protect concrete work from physical damage or reduced strength that could be caused by frost, freezing actions, or low temperatures.

1. When average high and low temperature is expected to fall below 40 deg F for three successive days, maintain delivered concrete mixture temperature within the temperature range required by ACI 301.
2. Do not use frozen materials or materials containing ice or snow. Do not place concrete on frozen subgrade or on subgrade containing frozen materials.
3. Do not use calcium chloride, salt, or other materials containing antifreeze agents or chemical accelerators unless otherwise specified and approved in mixture designs.

F. Hot-Weather Placement: Comply with ACI 301 and as follows:

1. Maintain concrete temperature below 90 deg F at time of placement. Chilled mixing water or chopped ice may be used to control temperature, provided water equivalent of ice is calculated to total amount of mixing water. Using liquid nitrogen to cool concrete is Contractor's option.
2. Fog-spray forms, steel reinforcement, and subgrade just before placing concrete. Keep subgrade uniformly moist without standing water, soft spots, or dry areas.

3.9 FINISHING FORMED SURFACES

A. Rough-Formed Finish: As-cast concrete texture imparted by form-facing material with tie holes and defects repaired and patched. Remove fins and other projections that exceed specified limits on formed-surface irregularities.

1. Apply to concrete surfaces not exposed to public view.

B. Smooth-Formed Finish: As-cast concrete texture imparted by form-facing material, arranged in an orderly and symmetrical manner with a minimum of seams. Repair and patch tie holes and defects. Remove fins and other projections that exceed specified limits on formed-surface irregularities.

1. Apply to concrete surfaces exposed to public view.

C. Related Unformed Surfaces: At tops of walls, horizontal offsets, and similar unformed surfaces adjacent to formed surfaces, strike off smooth and finish with a texture matching adjacent formed surfaces. Continue final surface treatment of formed surfaces uniformly across adjacent unformed surfaces, unless otherwise indicated.

3.10 FINISHING FLOORS AND SLABS

A. General: Comply with ACI 302.1R recommendations for screeding, restraightening, and finishing operations for concrete surfaces. Do not wet concrete surfaces.

B. Float Finish: Consolidate surface with power-driven floats or by hand floating if area is small or inaccessible to power driven floats. Restraighten, cut down high spots, and fill low spots. Repeat float passes and restraightening until surface is left with a uniform, smooth, granular texture.

1. Apply float finish to surfaces to receive trowel finish or broom finish.

C. Trowel Finish: After applying float finish, apply first troweling and consolidate concrete by hand or power-driven trowel. Continue troweling passes and restraighten until surface is free of trowel marks and uniform in texture and appearance. Apply trowel finish to all exposed interior floor slabs.

D. Broom Finish: Apply a broom finish to exterior concrete slabs, pads, and elsewhere as indicated.

1. Immediately after float finishing, slightly roughen trafficked surface by brooming with fiber-bristle broom perpendicular to main traffic route. Coordinate required final finish with Engineer before application.

3.11 MISCELLANEOUS CONCRETE ITEMS

A. Filling In: Fill in holes and openings left in concrete structures, unless otherwise indicated, after work of other trades is in place. Mix, place, and cure concrete, as specified, to blend with in-place construction. Provide other miscellaneous concrete filling indicated or required to complete the Work.

B. Equipment Bases and Foundations: Provide machine and equipment bases and foundations as shown on Drawings. Set anchor bolts for machines and equipment at correct elevations, complying with diagrams or templates from manufacturer furnishing machines and equipment.

3.12 CONCRETE PROTECTING AND CURING

A. General: Protect freshly placed concrete from premature drying and excessive cold or hot temperatures. Comply with ACI 306.1 for cold-weather protection and ACI 301 for hot-weather protection during curing.

B. Evaporation Retarder: Apply evaporation retarder to unformed concrete surfaces if hot, dry, or windy conditions cause moisture loss approaching 0.2 lb/sq. ft. x h before and during finishing operations. Apply according to manufacturer's written instructions after placing, screeding, and bull floating or darbying concrete, but before float finishing.

C. Formed Surfaces: Cure formed concrete surfaces, including underside of beams, supported slabs, and other similar surfaces. If forms remain during curing period, moist cure after

loosening forms. If removing forms before end of curing period, continue curing for the remainder of the curing period.

D. Unformed Surfaces: Begin curing immediately after finishing concrete. Cure unformed surfaces, including floors and slabs, concrete floor toppings, and other surfaces.

E. Cure concrete according to ACI 308.1, by one or a combination of the following methods:

1. Moisture Curing: Keep surfaces continuously moist for not less than seven days with the following materials:

   a. Water.
   b. Continuous water-fog spray.
   c. Absorptive cover, water saturated, and kept continuously wet. Cover concrete surfaces and edges with 12-inch lap over adjacent absorptive covers.

2. Moisture-Retaining-Cover Curing: Cover concrete surfaces with moisture-retaining cover for curing concrete, placed in widest practicable width, with sides and ends lapped at least 12 inches, and sealed by waterproof tape or adhesive. Cure for not less than seven days. Immediately repair any holes or tears during curing period using cover material and waterproof tape.

   a. Moisture cure or use moisture-retaining covers to cure concrete surfaces to receive penetrating liquid floor treatments.
   b. Cure concrete surfaces to receive floor coverings with either a moisture-retaining cover or a curing compound that the manufacturer certifies will not interfere with bonding of floor covering used on Project.

3. Curing Compound: Apply uniformly in continuous operation by power spray or roller according to manufacturer's written instructions. Recoat areas subjected to heavy rainfall within three hours after initial application. Maintain continuity of coating and repair damage during curing period.

   a. After curing period has elapsed, remove curing compound without damaging concrete surfaces by method recommended by curing compound manufacturer unless manufacturer certifies curing compound will not interfere with bonding of any floor covering used on Project.

4. Curing and Sealing Compound: Apply uniformly to floors and slabs indicated in a continuous operation by power spray or roller according to manufacturer's written instructions. Recoat areas subjected to heavy rainfall within three hours after initial application. Repeat process 24 hours later and apply a second coat. Maintain continuity of coating and repair damage during curing period.

3.13 JOINT FILLING

A. Prepare, clean, and install joint filler according to manufacturer's written instructions.

1. Defer joint filling until concrete has aged at least one month. Do not fill joints until construction traffic has permanently ceased.

B. Remove dirt, debris, saw cuttings, curing compounds, and sealers from joints; leave contact faces of joint clean and dry.

C. Install semirigid joint filler full depth in saw-cut joints and at least 2 inches deep in formed joints. Overfill joint and trim joint filler flush with top of joint after hardening.

3.14 CONCRETE SURFACE REPAIRS

A. Defective Concrete: Repair and patch defective areas when approved by Engineer. Remove and replace concrete that cannot be repaired and patched to Engineer's approval.

B. Patching Mortar: Mix dry-pack patching mortar, consisting of one part portland cement to two and one-half parts fine aggregate passing a No. 16 sieve, using only enough water for handling and placing.

C. Repairing Formed Surfaces: Surface defects include color and texture irregularities, cracks, spalls, air bubbles, honeycombs, rock pockets, fins and other projections on the surface, and stains and other discolorations that cannot be removed by cleaning.

1. Immediately after form removal, cut out honeycombs, rock pockets, and voids more than 1/2 inch in any dimension in solid concrete, but not less than 1 inch in depth. Make edges of cuts perpendicular to concrete surface. Clean, dampen with water, and brush-coat holes and voids with bonding agent. Fill and compact with patching mortar before bonding agent has dried. Fill form-tie voids with patching mortar or cone plugs secured in place with bonding agent.
2. Repair defects on surfaces exposed to view by blending white portland cement and standard portland cement so that, when dry, patching mortar will match surrounding color. Patch a test area at inconspicuous locations to verify mixture and color match before proceeding with patching. Compact mortar in place and strike off slightly higher than surrounding surface.
3. Repair defects on concealed formed surfaces that affect concrete's durability and structural performance as determined by Engineer.

D. Repairing Unformed Surfaces: Test unformed surfaces, such as floors and slabs, for finish and verify surface tolerances specified for each surface. Correct low and high areas. Test surfaces sloped to drain for trueness of slope and smoothness; use a sloped template.

1. Repair finished surfaces containing defects. Surface defects include spalls, popouts, honeycombs, rock pockets, crazing and cracks in excess of 0.01 inch wide or that penetrate to reinforcement or completely through unreinforced sections regardless of width, and other objectionable conditions.
2. After concrete has cured at least 14 days, correct high areas by grinding.
3. Correct localized low areas during or immediately after completing surface finishing operations by cutting out low areas and replacing with patching mortar. Finish repaired areas to blend into adjacent concrete.

4. Correct other low areas scheduled to receive floor coverings with a repair underlayment. Prepare, mix, and apply repair underlayment and primer according to manufacturer's written instructions to produce a smooth, uniform, plane, and level surface. Feather edges to match adjacent floor elevations.
5. Correct other low areas scheduled to remain exposed with a repair topping. Cut out low areas to ensure a minimum repair topping depth of 1/4 inch to match adjacent floor elevations. Prepare, mix, and apply repair topping and primer according to manufacturer's written instructions to produce a smooth, uniform, plane, and level surface.
6. Repair defective areas, except random cracks and single holes 1 inch or less in diameter, by cutting out and replacing with fresh concrete. Remove defective areas with clean, square cuts and expose steel reinforcement with at least a 3/4-inch clearance all around. Dampen concrete surfaces in contact with patching concrete and apply bonding agent. Mix patching concrete of same materials and mixture as original concrete except without coarse aggregate. Place, compact, and finish to blend with adjacent finished concrete. Cure in same manner as adjacent concrete.
7. Repair random cracks and single holes 1 inch or less in diameter with patching mortar. Groove top of cracks and cut out holes to sound concrete and clean off dust, dirt, and loose particles. Dampen cleaned concrete surfaces and apply bonding agent. Place patching mortar before bonding agent has dried. Compact patching mortar and finish to match adjacent concrete. Keep patched area continuously moist for at least 72 hours.

E. Perform structural repairs of concrete, subject to Engineer's approval, using epoxy adhesive and patching mortar.

F. Repair materials and installation not specified above may be used, subject to Engineer's approval.

3.15 FIELD QUALITY CONTROL

A. Testing and Inspecting: Owner shall engage a Special Inspector and a qualified independent testing and inspecting agency to perform field tests and inspections and prepare test reports per the requirements of the Statement of Special Inspections:

B. Concrete Tests: Testing of composite samples of fresh concrete obtained according to ASTM C 172 shall be performed according to the following requirements:

1. Testing Frequency: Obtain one composite sample for each day's pour of each concrete mixture less than 25 cu. yd., plus one set for each additional 50 cu. yd. or fraction thereof.

   a. When frequency of testing will provide fewer than five compressive-strength tests for each concrete mixture, testing shall be conducted from at least five randomly selected batches or from each batch if fewer than five are used.

2. Slump: ASTM C 143; one test at point of placement for each composite sample, but not less than one test for each day's pour of each concrete mixture. Perform additional tests when concrete consistency appears to change.

3. Air Content: ASTM C 231, pressure method; one test for each composite sample, but not less than one test for each day's pour of each concrete mixture.
4. Concrete Temperature: ASTM C 1064; one test hourly when air temperature is 40 deg F and below and when 80 deg F and above, and one test for each composite sample.
5. Compression Test Specimens: ASTM C 31.

    a. Cast and laboratory cure one set of four standard cylinder specimens for each composite sample.

6. Compressive-Strength Tests: ASTM C 39; test one (1) laboratory-cured specimen at 7 days and two (2) specimens at 28 days, and retain two (2) specimens for later testing at 56 days if 28 day strength falls below the required specified strength.

    a. A compressive-strength test shall be the average compressive strength from a set of two specimens obtained from same composite sample and tested at age indicated.

7. Strength of each concrete mixture will be satisfactory if every average of any three consecutive compressive-strength tests equals or exceeds specified compressive strength and no compressive-strength test value falls below specified compressive strength by more than 500 psi.

C. Concrete Test results shall be reported in writing to Owner's Representative, concrete manufacturer, and Contractor within 48 hours of testing. Reports of compressive-strength tests shall contain Project identification name and number, date of concrete placement, name of concrete testing and inspecting agency, location of concrete batch in Work, design compressive strength at 28 days, concrete mixture proportions and materials, compressive breaking strength, and type of break for both 7- and 28-day tests.

D. Strength Evaluation of Concrete Structures: The strength of the concrete structure in-place shall be considered deficient if it fails to comply with any of the requirements which control the strength of the concrete, including the following conditions:

1. Failure to meet compressive strength requirements.
2. Concrete which differs from the required dimensions or locations in such a manner that reduces strength.
3. Concrete which has been subjected to damaging mechanical disturbances; particularly load stresses, heavy shock, or excessive vibration.
4. Poor workmanship and quality control which is likely to result in deficient strength.

E. Testing of In-Place Concrete Structure for Strength: When there are compression test results or other evidence that indicate that the in-place concrete structure does not meet strength specification requirements, then the testing agency shall take cores drilled from hardened concrete for compressive strength determination, complying with ASTM C 42 and as follows:

1. Take at least 3 representative cores form each member or area of the in-place concrete structure that has suspect strength, from locations as directed by the Engineer.
2. Test cores in a saturated-surface-dry condition per ACI 318 if the concrete will be wet during the use of the completed structure.

3. Strength of concrete for each series of cores will be considered satisfactory if their average compressive strength is a least 85 percent and no single core is less than 75 percent of the 28 day required compressive strength.
4. Report core test results in writing to the Engineer within 24 hours of the tests. Reports of core tests shall contain the project identification name and number, date of coring, date of test, name of concrete testing service, location of test core in the structure, concrete type and class represented by the core sample, design compressive strength at 28 days, concrete mix proportions and materials, compressive breaking strength, type of break, direction of applied load to core with respect to horizontal plane of the concrete as placed, and the moisture condition of the core at the time of testing.

F. Nondestructive Testing: Impact hammer, sonoscope, or other nondestructive device may be permitted by Owner's Representative but will not be used as sole basis for approval or rejection of concrete.

G. Additional testing and inspecting, at Contractor's expense, will be performed to determine compliance of replaced or additional work with specified requirements.

H. Correct deficiencies in the Work that test reports and inspections indicate dos not comply with the Contract Documents.

I. Structurally Inadequate In-Place Concrete: If in-place concrete is found to be structurally inadequate based on core tests or by results of non-destructive testing, then the rejected in-place concrete work shall be repaired, or removed and replaced, as directed by the Owner's Representative.

END OF SECTION

SECTION 03400
PRECAST CONCRETE STRUCTURES

PART 1 - GENERAL

1.1 SUMMARY

A. The work covered by this section of the specifications consists of furnishing all plant labor, equipment, appliances, and materials and in performing all operations in connection with the construction of precast concrete structures, complete, in strict accordance with this section for the specifications and the applicable drawings and subject to the terms and conditions of the contract.

B. Materials for precast concrete structures and associated appurtenances shall be as shown on the Drawings and as specified herein.

1.2 APPLICABLE STANDARDS

A. American Society for Testing Materials (ASTM) C478, D1752, A48, C858

B. Federal Specification QQ-I-652 for Gray Iron Castings

C. Corps of Engineers CRD-588

D. AASHTO M 198

E. ACI 301 "Specifications for Structural Concrete for Buildings".

F. ACI 318 "Building Code Requirements for Reinforced Concrete".

G. ACI 350 "Environmental Engineering Concrete Structures".

H. Concrete Reinforcing Steel Institute, "Manual for Standard Practice".

1.3 SUBMITTALS

A. Submittals shall be in accordance with Division 1

B. Shop Drawings: Submit engineering calculations and shop drawings prepared under supervision of and stamped by a licensed structural engineer, registered in the Commonwealth of Virginia, showing complete information for fabrication and installation of precast concrete units or alternative cast in place concrete structures. Indicate plan and cross-section; location, size and type of reinforcement, including special reinforcement and lifting devices necessary for handling and erection. Show the location of all hatch covers, access doors, ventilation fans, vent pipes and pipe penetrations. Indicate information on all materials including concrete and reinforcing steel verifying compliance with the specifications.

B. Certify compliance with the referenced ASTM standards specified herein.

C. A packing list or invoice shall accompany each shipment of material.

D. Submit manufacturer's specifications and instructions for manufactured materials and products. Include manufacturer's certifications and laboratory test reports as required.

E. Submit catalogue information for all materials and items furnished with the precast concrete structure.

1.4 QUALITY ASSURANCE

A. Fabricator Qualifications: Firms which have ten (10) years successful experience in fabrication of precast concrete units similar to units required for this project will be acceptable. Fabricator must have sufficient projection capacity to produce required units without causing delay in work.

B. Design Requirements: All sections shall be designed to meet the requirements of ACI 350 "Environmental Engineering Concrete Structures". The structures shall be capable of resisting the uplift forces for a completed submerged exterior condition and no water inside the structure, during construction and in permanent position. All sections shall be designed to support soil loads, hydrostatic pressure, and any surcharge pressures.

a. Angle of Internal Friction = 28 Degrees.
b. Soil Density = 125 PCF.
c. Coefficient of At-Rest Earth Pressure = 0.47.

1.5 WATERTIGHT STRUCTURES

A. Precast concrete structures shall be watertight to prevent any groundwater or surface water from entering the structure.

B. The number of section joints for the precast concrete structures shall be held to a minimum. The minimum height of sections shall be four (4) feet except the top section.

1.6 DELIVERY, STORAGE AND HANDLING

CONTRACTOR shall provide an area on-site for off-loading and storage of pre-cast structures delivered to the site. The surface on which the structures are placed shall not cause eccentric loadings which may damage the items. Prior, and during installation, precast structures will be moved utilizing equipment of sufficient capacity to safely move and place such structures. Any damage to pre-cast structure shall be reported to the ENGINEER for determination as to its ability to meet its intended use. Any structure damaged such that it cannot be used as intended, will be rejected by the ENGINEER and CONTRACTOR shall replace in-kind at its sole expense.

PART 2 - PRODUCTS

2.1 GENERAL

Unless authorized by the Engineer, structures will be of the precast type as shown on the Drawings. Structures shall be manufactured in accordance with the latest ACI Building Code, Chapter 13, for Class A, Air-Entrained concrete or as approved by UCC. Structures shall be built to the dimensions noted on

the Drawings.

2.2 MANHOLES

A. A maximum of two lift holes per manhole section may be provided.

B. Provide tongue and groove joints in manhole sections with a preformed groove in the tongue for placement of an O-ring type round, rubber gasket or Press Seal, Inc.'s Profile RS gasket.

C. Gasket shall comply with the requirements of ASTM C361 or C443, as applicable to the application of the structure and joint being sealed, i.e. horizontal and/or vertical.

D. Butly-mastic shall comply with ASTM C990.

E. Gasket shall provide the sole element in sealing the joint from either internal or external hydrostatic pressure. Additional sealing material may be used on the exterior for the joints with the approval of DPU. External sealing bands (joint wraps) shall be applied with a primer and conform to ASTM C877.

2.3 FRAME AND COVER

A. Manhole frames and covers shall be heavy duty, traffic resistant, molded of gray cast iron conforming to ASTM A48, Class 30. Castings shall not be coated. Seating surfaces between frame and cover shall be machined. The word "SEWER" shall be cast into the cover.

B. Frame and cover castings shall conform to the details and dimensions shown in these specifications and plans and shall be true to pattern in form and dimensions, free from pouring faults, sponginess, cracks, blow-holes and other defects in positions affecting their strength and value for the use intended. They shall be boldly filleted on angles and the rises shall be sharp and perfect. They shall be sand blasted or otherwise cleaned and scaled so as to present a smooth, clean, and uniform surface.

C. Sealant for manhole frames shall be a one-component polyurethane sealant similar to Sika "Sikaflex" type 430 or bitumastic material.

2.4 PIPE CONNECTIONS

A. Openings for pipe shall be cast or core drilled and supplied with a sealing mechanism similar to Kor-N-Seal or as approved by Engineer to provide a sealed joint. Flexible pipe connections shall be of materials consisting of EPDM and elastomers designed to be resistant to water, sewage, acids, ozone, weathering, and aging. Neoprene shall conform to ASTM C443 and ASTM C923 and all stainless steel elements of the connector shall be totally non-magnetic Series 304 stainless, excluding the worm screw for tightening the steel band around the pipe, which shall be Series 305 stainless. The worm screw for tightening the steel band shall be torqued by a break-away torque wrench available from the precast manhole supplier, and set for 60-70 inch/lbs.

B. Cast or core drill openings in manholes to receive connectors. Connectors shall be suitable for field repair or replacements. Connectors not suitable for field replacement are unacceptable.

C. The assembled connectors shall allow at least an 11 degree angular deflection of the pipe and at least one inch of lateral misalignment in any direction and be suitable for a normal variation in diameter or roundness for the pipe material used.

D. Sealant for flexible pipe connections shall be a two-component polysulfide sealant similar to Sika "Sikaflex" type 412 with primer type 419.

2.4 REINFORCING MATERIALS

A. Reinforcing Bars: ASTM A 615, Grade 60, unless otherwise indicated.

2.5 CONCRETE MATERIALS

A. Portland Cement: ASTM C 150, Type II.

B. Use only one brand and type of cement throughout project, unless otherwise accepted by the Engineer.

C. Concrete for vaults and manholes shall have a minimum compressive strength of 4,000 psi.

D. Aggregates: ASTM C 33, and as herein specified. Provide aggregates from a single source for exposed concrete.

E. Water: Potable

F. Air-Entraining Admixture: ASTM C 260.

G. Water-Reducing Admixture: ASTM C 494, Type A, or other Type approved for fabricator's units.

H. Antibacterial Admixture: ConShield, or approved equal

2.6. GROUT MATERIALS

A. Cement Grout: Portland cement, ASTM C 150, Type II, and clean, natural sand, ASTM C 404. Mix at ratio of 1.0 part cement to 3.0 parts sand, by volume, with minimum water required for placement and hydration.

B. Non Metallic Shrinkage-Resistant Grout: Pre-mixed, non-metallic, non-corrosive, non-straining product containing selected silica sands, portland cement, shrinkage compensating agents, plasticizing and water reducing agents, complying with CRD-C621.

2.7 ANTIMICROBIAL ADMIXTURE

A. An antimicrobial agent, ConShield, or approved equal, shall be used to render the concrete uninhabitable for bacteria growth.

B. The liquid antibacterial admixture shall be an EPA registered material and the registration number shall be submitted for approval prior to use in the project.

C. The amount to be used shall be as recommended by the manufacturer of the antibacterial admixture. This amount shall be included in the total water content of the concrete mix design.

D. The admixture shall be added into the concrete mix water to insure even distribution of the admixture throughout the concrete mixture.

E. The supplier of the antimicrobial concrete or concrete product shall submit a letter of certification to the Engineer stating that the correct amount and correct mixing procedure was followed for all antimicrobial concrete.

F. All sections of manhole with ConShield shall be clearly marked by the supplier at the plant so that the inspector and contractor can identify those manholes with ConShield admixture. The certification provided by the supplier shall indicate the method utilized for marking manholes with ConShield admixture at the plant.

G. Note: ConShield liquid antimicrobial admixture can be obtained from ConShield Technologies, Inc. EPA Registration 70871-12, Phone/Fax: (877) 543-2094.

2.9 FABRICATION

A. Ready-Mix Concrete: Comply with requirements of ASTM C 94, and as herein specified.

2.10 METER VAULTS AND MANHOLES

A. Precast Base: Precast base sections shall be installed on a firm stabilized foundation prepared similar to that required for the proper installation for the adjacent pipeline as described elsewhere in the specifications. Precast base sections may be supplied by the manufacturer with precast inverts, or the inverts may be cast in the field by the Contractor. Manholes base shall be monolithic with the base integrally cast with the walls.

B. Precast Sections: Precast manhole sections shall be manufactured in accordance with current ASTM Standard C478. Precast sections shall not have lift holes through the wall of the structure. Keyways or other provisions shall be included for lifting structure. These holes shall be tapered and shall be plugged with mortar after installation and made watertight. Joints in the manhole sections shall be formed entirely of concrete employing rubber o-ring gaskets or Type 4G precision rubber gaskets by Press-Seal Gasket Corporation or equal and when assembled shall be self-centering and make a uniform watertight joint. In addition to rubber gaskets between manhole sections, grout and bituminous waterproofing compound shall be applied at each joint shown on the plans.

C. Precast Top Slabs: Precast concrete flat tops for the vaults and manholes shall be designed for AASHTO HS-20 loadings using Working Stress Design. The sealed shop drawings shall indicate that these tops are designed for AASHTO- HS-20.

2.11 STEPS

A. Steps shall be corrosion resistant and shall be 1/2" Grade 60 Steel reinforcing rod encapsulated in copolymer polypropylene plastic, designed so that the foot will not slide off. The steps shall conform with ASTM C478 paragraph 11 and to the dimensions shown on the standard details.

2.12 WATERTIGHT WORK REQUIRED

A. Manholes and vaults shall be completely watertight. All leaks shall be repaired immediately with a non-shrink material, or the entire work removed and rebuilt.

B. Ground water must be kept below all parts of the masonry or concrete foundations and walls until the mortar and concrete has obtained an adequate set.

2.13 APPURTENANCES AND WATERPROOFING

A. Jointing mastic shall be elastic resistant formulation of plastic bituminous materials and inert filler so combined that when applied to vertical metal surface and heated to 120 degrees F, the jointing mastic will neither slump nor lose plasticity. When applied directly from the container without further fixing, the jointing mastic can be applied in an even adherent coat within the temperature range of 20 degrees to 100 degrees F.

B. The below grade vertical concrete exterior surfaces of the structures shall receive two coats of coal tar epoxy.

C. Quick setting non-shrink grout shall conform to requirements of Corps of Engineers CRD 588, octocrete, speedcrete or equal.

D. Flexible gasket between manhole and manhole frame shall be extruded rope type B, in accordance with AASHTO M-198, butyl based, 3/4 -inch diameter minimum.

E. Expansion joint filler shall be Type 1 in accordance with ASTM D-1752.

PART 3 - EXECUTION

3.1 INSTALLATION

A. Joints: Structures shall be of watertight construction. Structure section joints shall be of the O-ring type conforming to ASTM C443. The inside and outside of each joint shall be sealed by using butyl rubber rope caulk installed continuously around the joint.

3.2 TESTING

A. Testing shall be completed in accordance with Division 2.

3.3 FINISHING

A. All exposed vertical exterior surfaces of the manhole to 1 foot below grade shall have a burlap bag (sack) rubbed finish. All joints, bung holes, lifting lug holes and pits and air holes more than a ½" deep shall be filled with mortar before applying the rubbed finish.

B. All concrete protruding above the surface shall be ground smooth before applying the rubbed finish.

C. Mortar mix for the rubbed finish shall consist of a 50-50 mix of fine sand and cement mixed to a paste consistency and applied with a burlap bag. The concrete is wet and the paste mixture is rubbed over the entire surfaces filling all pits and holes. As the mixture dries the surface shall be rubbed with the burlap to remove all excess mortar mix from the surface leaving a smooth exterior finish. Bonding agent is not required.

D. All damaged areas of the manhole top when a flat top is specified shall be repaired with a mortar mix using a bonding agent.

END OF SECTION

SECTION 03600
GROUT

PART 1- GENERAL

1.1 DESCRIPTION

A. Scope:

1. Provide all labor, materials, equipment, and incidentals as shown, specified and required to furnish and install grout.

2. The types of grout include the following:

a. Non-Shrink Grout: This type of grout is to be used wherever grout is shown in the Contract Documents, unless another type is specifically referenced. Two classes of non-shrink grout (Class I and II) and areas of application are specified herein.

B. Application: The following is a listing of typical applications and the corresponding type of grout, which is to be used. Unless otherwise indicated, grouts shall be provided as listed below whether called for on the Drawings or not.

Application	Type of Grout
Base plates for pipe supports and other non-motorized equipment	Non-shrink Class II.
Machinery under 30 horsepower	Non-shrink Class II
Any application not listed above, where grout is called for on the Drawings.	Non-shrink Class II.

1.2 REFERENCES

A. Standards referenced in this Section are listed below:

1. American Concrete Institute, (ACI).

a. ACI 211.1, Practice for Selecting Proportions for Normal, Heavyweight, and Mass Concrete.
b. ACI 301, Specification for Structural Concrete (Includes ASTM Standards referred to herein).

2. American Society for Testing and Materials, (ASTM).

a. ASTM C 33, Specification for Concrete Aggregates.
b. ASTM C 109, Test Method for Compressive Strength of Hydraulic Cement Mortars (using 2 in. or 50 mm. Cube Specimens).

c. ASTM C 150, Specification for Portland Cement.
d. ASTM C 230, Specification for Flow Table for use in Tests of Hydraulic Cement.
e. ASTM C 531, Test Method for Linear Shrinkage and Coefficient of Thermal Expansion of Chemical- Resistant Mortars, Grouts, and Monolithic Surfacings.
f. ASTM C 579, Test Method for Compressive Strength of Chemical-Resistant Mortars, Grouts, Monolithic Surfacings and Polymer Concretes.
g. ASTM C 827, Test Method for Early Volume Change of Cementations Mixtures.
h. ASTM C 882, Test Method for Bond Strength of Epoxy-Resin Systems Used with Concrete.
i. ASTM C 937, Specification for Grout Fluidifier for Preplaced-Aggregate Concrete.
j. ASTM C 939, Text Method for Flow of Grout for Preplaced-Aggregate Concrete (Flow Cone Method).
k. ASTM C 1107, Specification for Packaged Dry, Hydraulic-Cement Grout (Non-shrink).
l. ASTM C 1181, Test Method for Compressive Creep of Chemical-Resistant Polymer Machinery Grouts.
m. ASTM D 696, Test Method for Coefficient of Linear Thermal Expansion of Plastics.

1.3 QUALITY ASSURANCE

A. Field Tests:

1. Compression test specimens will be taken during construction at the discretion of the Owner or Engineer from the first placement of each type of grout, and at intervals thereafter as selected by the ENGINEER to ensure continued compliance with these Specifications. The specimens will be made by the ENGINEER or its representative.

2. Compression tests and fabrication of specimens for non-shrink grout will be performed as specified in ASTM C 109 at intervals during construction as selected by the ENGINEER. A set of three specimens will be made for testing at seven days, 28 days, and each additional time period as appropriate.

3. The cost of all laboratory tests on grout will be borne by the OWNER, but CONTRACTOR shall assist the ENGINEER in obtaining specimens for testing. However, CONTRACTOR shall be charged for the cost of any additional tests and investigation on Work performed which does not conform to the requirements of the Specifications. CONTRACTOR shall supply all materials necessary for fabricating the test specimens.

1.4 SUBMITTALS

A. Submittals shall be in accordance with Division 1.

B. Shop Drawings: Submit the following:

1. For Grout Fill and Construction Joint Grout, copies of grout design mix and laboratory test reports for grout strength tests.

C. Reports and Certificates, submit for approval the following:

1. For proprietary materials, submit copies of manufacturer's certification of compliance with the specified properties for Class I, II, and III grouts.

2. Submit certified testing lab reports for ASTM C 1107, Grade B and Grade C (as revised herein) requirements for Class I and II grouts tested at a fluid consistency for temperatures of 45, 73.4, 90°F with a pot life of 30 minutes at fluid consistency.

3. Submit certification that materials conform to the Specifications requirements for nonproprietary materials.

4. Submit certifications that all grouts used on the project are free of chlorides or other chemicals causing corrosion.

5. Manufacturer's specifications and installation instructions for all proprietary materials.

1.5 PRODUCT DELIVERY, STORAGE AND HANDLING

A. Delivery of Materials: Grout materials from manufacturers shall be delivered in unopened containers and shall bear intact manufacturer's labels.

B. Storage of Materials: Grout materials shall be stored in a dry shelter and shall be protected from moisture.

PART 2- PRODUCTS

2.1 GROUTS

A. General: Non-shrink grout shall be a prepackaged, inorganic, flow able, non-gas-liberating, non-metallic, cement-based grout requiring only the addition of water. Manufacturer's instructions shall be printed on each bag or other container in which the materials are packaged. The specific formulation for each class of non-shrink grout specified herein shall be that recommended by the manufacturer for the particular application.

1. Class II, non-shrink grouts shall have a minimum 28 day compressive strength of 7,000 psi. This grout is for general purpose grouting applications as specified herein.

2. Shall meet the requirements of ASTM C 1107 and the following requirements when tested using the amount of water required to achieve the following properties:

a. Flowable consistency (140 percent flow on ASTM C 230, five drops in 30 seconds).

b. Fluid working time of at least 15 minutes.
c. Flowable for at least 30 minutes.

3. The grout when tested shall not bleed at maximum allowed water.

4. The non-shrink property is not based on a chemically generated gas or gypsum expansion.

5. Products and Manufacturer: Provide one of the following:

a. Set Grout, as manufactured by Master Builders, Inc.
b. NBEC Grout, as manufactured by Five Star Products, Inc.
c. NS Grout, as manufactured by the Euclid Chemical Company.
d. Or equal.

2.2 CONSISTENCY

A. The consistency of grouts shall be that necessary to completely fill the space to be grouted for the particular application. Dry pack consistency is such that the grout is plastic and moldable, but will not flow. Where "dry pack" is called for in the Contract Documents, it shall mean a grout of that consistency; the type of grout to be used shall be as specified herein for the particular application.

PART 3- EXECUTION

3.1 INSPECTION

A. CONTRACTOR shall examine the substrate and conditions under which grout is to be placed and notify ENGINEER, in writing, of unsatisfactory conditions. Do not proceed with the Work until unsatisfactory conditions have been corrected in a manner acceptable to ENGINEER.

3.2 INSTALLATION

A. General:

1. Place grout as shown and in accordance with manufacturer's instructions. If manufacturer's instructions conflict with these Specifications, do not proceed until ENGINEER provides clarification.

2. Manufacturers of proprietary products shall make available upon 72 hours notification the services of a qualified, full time employee to aid in assuring proper use of the product under job conditions.

3. Placing grout shall conform to manufacturer's instructions.

4. Grout shall be cured following manufacturer's instructions

END OF SECTION

SECTION 05520
ALUMINUM ACCESS HATCH

PART 1- GENERAL

1.1 SUMMARY

A. Scope

1. This section includes providing and installing aluminum access hatches as shown on the Drawings and as specified herein.

1.2 SUBMITTALS

A. Provide submittals in accordance with Division 1.

B. Shop Drawings

1. The Contractor shall submit complete shop drawings of all equipment furnished for this project as covered by these specifications. The contractor's submittal must include a certification that the submitted material describes exactly the equipment to be provided or a list of deviations from the specifications with an explanation of each deviation.

C. Operation and Maintenance Manual

1. Provide operation and Maintenance Manuals in accordance with Specification 01730 "Operation and Maintenance Data."

2. Operation and maintenance manuals shall be provided by manufacturer at least two weeks prior to shipment of major equipment components. Each manual shall be a bound, indexed binder with drawings and parts lists prepared specifically for this project rather than general instructions that are not designed for this project.

1.3 1.3 QUALITY ASSURANCE

A. Qualifications

1. Manufacturer's Qualifications:

a. Manufacturers regularly engaged in the manufacture of the equipment as specified herein and who can demonstrate equipment of this specified design, in actual service for a period of not less than 10 years will be considered as acceptable manufacturers.

b. Manufacturers shall show evidence of quality assurance in manufacturing and supplying equipment essential in details to the equipment herein specified.

1.4 DELIVERY, STORAGE, AND HANDLING

A. Packing, Shipping, Handling, and Unloading

1. Deliver materials to the Site to ensure uninterrupted progress of the Work. Deliver anchor bolts and anchorage devices, which are to be embedded in cast-in-place concrete in ample time to prevent delay of that Work.

B. Acceptance at Site

1. All boxes, crates, and packages shall be inspected by Contractor upon delivery to the Site. Contractor shall notify Engineer, in writing, if any loss or damage exists to equipment or components. Replace loss and repair damage to new condition in accordance with manufacturer's instructions.

C. Storage and Protection

1. Store materials to permit easy access for inspection and identification. Keep all material off the ground, using pallets, platforms, or other supports. Protect steel members and packaged materials from corrosion and deterioration.

2. Store all equipment in covered storage off the ground and prevent condensation and in accordance with the manufacturer's recommendations for long-term storage

.

1.5 1.5 WARRANTY

A. Access covers shall carry a lifetime guarantee against defects in material and/or workmanship.

PART 2- PRODUCTS

2.1 ACCESS HATCH

A. Access doors shall be double spring assisted doors as indicated on the drawings

B. A protective grating panel shall be provided for each hatch and shall be 1 inch aluminum "I" bar grating with Safety Orange powder-coated finish. Grating shall be hinged with tamper proof stainless steel bolts, and shall be supplied with a positive latch to maintain unit in an upright position. Grating shall have a 6 inches viewing area on each lateral unhinged side for visual observation and limited maintenance. Grating support ledges on 300 lbs. psf loaded access covers shall incorporate nut rail with a minimum of four (4) stainless steel spring nuts. A padlock hasp for owner-supplied padlock shall be provided.

C. Access doors shall comply with the following specifications:

1. Cover Leaf(s) shall be a minimum 1/4" aluminum diamond plate.
2. Angle Frame shall be a minimum 1/4" aluminum with continuous anchor flange.
3. Frame shall be coated with a bituminous coating where in contact with concrete.

4. Load Rating shall be a minimum of 300 lbs. psf uniform live load with a maximum allowable deflection of 1/150 of the span.
5. Locking System: shall be a type 316 stainless steel slam lock with removable key.
6. Cover shall be equipped with the following stainless steel features:

    a. Spring assists, T-316 tamper proof attaching hardware, automatic T-316 hold open arm with aluminum latch.
    b. Cushion / Gasket: neoprene.

D. Rectangular access doors shall be Model S2S as manufactured by Halliday Products, or approved equal.

E. Circular access doors shall be Model R1R as manufactured by Halliday Products or approval equal.

2.2 PROTECTIVE (SAFETY) GRATING

A. The protective grating panel shall be 1 inch aluminum "I" bar grating with Safety Orange powder-coated finish. Grating shall be hinged with tamper proof stainless steel bolts, and shall be supplied with a positive latch to maintain unit in an upright position. Grating shall have a 6-in. viewing area on each lateral unhinged side for visual observation and limited maintenance. Grating support ledges on 300 lbs. psf loaded access covers shall incorporate nut rail with a minimum of four (4) stainless steel spring nuts. A padlock hasp for owner-supplied padlock shall be provided. Unit shall carry a Lifetime guarantee against defects in material and/or workmanship.

2.3 LADDER

A. Ladder shall be constructed entirely of aluminum. The rails shall be 1/2" x 2 3/4" (13mm x 70mm) aluminum extrusion and shall be spaced 16" apart. The wall mounted standoffs shall be 3/8" x 2 1/2" flat bar and welded to the rails at a maximum of 60" on center. The standoffs shall be a minimum of 7" and manufactured to fit flush with the wall. 1 3/8" diameter type "D" rungs with flat slip resistant surface shall be spaced at 12" on center and welded to the outside of each rail.

B. Ladder shall be Model L1B as manufactured by Halliday Products, or approved equal.

2.4 LADDER SAFETY EXTENSION

A. The Ladder Safety Extension shall be constructed entirely of aluminum and stainless steel. The aluminum housing shall mount to the ladder by means of stainless steel channel clamps secured to the ladder rungs with stainless steel "U" bolts. The aluminum telescoping post shall extend 37"- 34" above the top of the housing and lock into position with a stainless steel pin.

B. Ladder Safety Extension shall be Series L1E as manufactured by Halliday Products Inc., or approved equal.

PART 3- EXECUTION

3.1 Access hatches and appurtenances shall be installed in accordance with manufacturer's instructions.

END OF SECTION

SECTION 05530
PIPE SUPPORTS AND STANDS

PART 1- GENERAL

1.1 DESCRIPTION

A. The work covered by this Section comprises the furnishing of all labor, material, equipment to fabricate and install pipe supports, pipe stands, anchors, and appurtenances as shown on the plans.

1.2 QUALITY ASSURANCE

A. Responsibility for all errors in fabrication and correct fitting of structures shown on the shop drawings is the Contractor's.

1.3 REGULATORY REQUIREMENTS

A. Metal fabrication materials shall meet the requirements of the following ASTM Standards and Specifications.

B. Structural steel, plates and shapes A-36

C. Structural bolts, A-325

D. Other Bolts, A-307

E. Steel pipe, A 53.

F. Galvanizing, A123.

G. Comply with the provisions of the following standards except as otherwise shown or specified.

1. AWS code for welding in building construction.

1.4 SUBMITTALS

A. Submittals shall be in accordance with Division 1.

B. Submit shop drawings and manufacturer's descriptive literature as applicable for all metal fabrications. No items shall be fabricated prior to review and approval by Engineer. Minimum scale of drawings and elevations shall be 3/4 in. equals 1 ft., details enlarged to adequate size for clarity, show anchorage.

1.5 DELIVERY, STORAGE, AND HANDLING

A. Packing, Shipping, Handling, and Unloading

1. Deliver materials to the Site to ensure uninterrupted progress of the Work. Deliver anchor bolts and anchorage devices, which are to be embedded in cast-in-place concrete in ample time to prevent delay of that Work.

B. Acceptance at Site

1. All boxes, crates, and packages shall be inspected by Contractor upon delivery to the Site. Contractor shall notify Engineer, in writing, if any loss or damage exists to equipment or components. Replace loss and repair damage to new condition in accordance with manufacturer's instructions.

C. Storage and Protection

1. Store materials to permit easy access for inspection and identification. Keep all material off the ground, using pallets, platforms, or other supports. Protect steel members and packaged materials from corrosion and deterioration.

2. Store all equipment in covered storage off the ground and prevent condensation and in accordance with the manufacturer's recommendations for long-term storage.

PART 2- PRODUCTS

2.1 Anchor Bolts

A. All anchor bolts shall be stainless steel in accordance with Section 03240 "Adhesive Anchors.

2.2 Fabricated Pipe Supports

A. Pipe supports detailed on the drawings shall be shop fabricated.

B. All pipe supports shall be fabricated with minimum A36 steel or 304 stainless steel as indicated on the drawings.

C. All galvanized pipe supports shall be hot dipped galvanized after fabrication.

2.3 Manufacturer's Pipe Supports

A. Pipe supports that are specified by a manufacturer's name and figure number shall be purchased as a complete fabricated unit.

B. All purchased galvanized pipe supports shall be hot dipped galvanized after fabrication.

C. Accepted pipe support manufacturers shall be as follows or approved equal.

1. Grinnell

2. Standon adjustable pipe supports as manufactured by Material Resources, Inc. 22700 N.W. Quatama Street, Hillsboro, Oregon 97124.

2.4 Threaded Rods, Bolts and Nuts

A. All galvanized threaded rods, bolts, and nuts shall be hot dipped galvanized in accordance with ASTM 153 where required as part of a support. Nuts shall be over sized and hot dipped galvanized for thread compatibility.

B. All stainless steel threaded rods, nuts and bolts shall have an anti-seize compound applied to the threads before assembly.

2.5 Prefabricated Metal Framing Systems

A. Pipe supports where indicated or detailed on the drawings shall be fabricated by a prefabricated metal framing system as manufactured by Unistrut, B-Line or approved equal.

B. All framing system channel be a minimum 1-5/8 x 1-5/8 x 12 gauge unless indicated otherwise on the drawings.

C. All channel, nuts, bolts, clips, brackets and other appurtenances shall be a minimum of 304 stainless steel.

D. All channel framing shall have end caps.

2.6 Ductile Iron and Steel Pipe Size Considerations

A. Pipe supports shall be fabricated to match the OD of the pipe they are to be supporting. Curvature of supports and u-bolts shall conform to the OD of the pipe.

2.7 Inserts

A. All pipe supports shall be anchored to concrete floors, walls or overhead decks with stainless steel adhesive anchors in accordance with section 03240 "Adhesive Anchors"

2.8 Cable Tray Supports for Chemical Lines

A. All cable trays shall be aluminum with stainless steel support hardware.

B. Cable tray shall be B-Line Series 24 ladder type cable tray with 12" rung spacing. Each section shall have a minimum of two supports. Cable tray shall be supported with stainless steel framing strut and appurtenances.

PART 3- EXECUTION

3.1 Installation

A. All pipe supports and pipe stands shall be installed plumb, level, and square to the pipe and structures.

B. Hanger rods shall be secured at the structure and pipe supports with nuts to lock the rods in position to prevent movement. All rods shall be double nutted on each side of the

hanger and support.

C. Pipes shall be supported by steel pipe hangers, clamps, brackets, rods and inserts as required to support the imposed pipe loads. Hangers in general shall be new, manufactured of carbon steel and hot dipped galvanized after fabrication or 304 stainless steel as indicated on the drawings.

D. Pipe Support Spacing

1. All pipe supports shall be installed in locations as indicated on the drawings. The following spacing shall be used if supports are not indicated on the drawings. The more conservative shall apply. This is a maximum spacing and does not take into account valves, fittings, flow meters, risers, drops and other devices. Locations where these are located will require additional supports.

2. Ductile Iron and steel pipe supports shall be spaced in accordance with the following schedule for galvanized and stainless steel pipe:

Pipe sizes (inches)	½ - 3/4	1- 1 1/4	1 ½ - 2	3 – 4
Max spacing (feet)	4	6	8	10

3. Copper tubing pipe supports shall be spaced in accordance with the following schedule:

Nominal tubing size (inches)	1/2 - 3/4	1- 1 1/4	1 1/2 - 2
Max spacing (feet)	4	5	6

4. PVC pipe supports shall be spaced in accordance with the following schedule:

Nominal pipe size (inches)	1/2 - 3/4	1- 1 1/4	1 1/2 - 2	3-4
Max spacing (feet)	2.5	3	4	6

5. Maximum spacing between pipe supports shall be 10 feet for all pipes 6" and above. This is a maximum spacing and does not take into account valves, fittings, flow meters, risers, drops and other devices. Locations where these are located will require additional supports.

6. In addition to the above supports shall be located as per the following:

   a. Maximum spacing as indicated above
   b. Maximum of 12 inches from all horizontal and vertical changes in direction.
   c. On the suction and discharge of pump piping to eliminate pipe stresses on the pump flanges.
   d. On the connections to all equipment to eliminate pipe stresses on the equipment connections and allow equipment removal.

e. On the inlet and outlet piping to the water meter to allow the removal of the water meter.

f. At the location of valves, fittings or other devises that cause additions weight to the piping.

g. Additional pipe supports as indicated on the drawings.

3.2 INSTALLATION

A. Coatings

1. Repair all damaged galvanized coatings on galvanized items with galvanized repair paint according to ASTM A 780 and manufacturer's written instructions.

2. Where it is necessary to assemble supports in the field with galvanized threaded pipe, all pipe threads shall be coated as described above.

3. All threads where used for adjustment of the supports shall be coated with an anti-seize compound.

END OF SECTION

SECTION 061000
ROUGH CARPENTRY

PART 1 - GENERAL

1.1 SUMMARY

A. Section Includes:

1. Framing with dimension lumber.
2. Wood blocking, and nailers.
3. Wood furring and grounds.
4. Wood sleepers.
5. Plywood backing panels.

1.2 DEFINITIONS

A. Exposed Framing: Framing not concealed by other construction.

B. Dimension Lumber: Lumber of 2 inches nominal or greater but less than 5 inches nominal in least dimension.

C. Lumber grading agencies, and the abbreviations used to reference them, include the following:

1. NeLMA: Northeastern Lumber Manufacturers' Association.
2. NLGA: National Lumber Grades Authority.
3. SPIB: The Southern Pine Inspection Bureau.

1.3 ACTION SUBMITTALS

A. Product Data: For each type of process and factory-fabricated product. Indicate component materials and dimensions and include construction and application details.

1. Include data for wood-preservative treatment from chemical treatment manufacturer and certification by treating plant that treated materials comply with requirements. Indicate type of preservative used and net amount of preservative retained.
2. For products receiving a waterborne treatment, include statement that moisture content of treated materials was reduced to levels specified before shipment to Project site.
3. Include copies of warranties from chemical treatment manufacturers for each type of treatment.

B. Fastener Patterns: Full-size templates for fasteners in exposed framing.

1.4 INFORMATIONAL SUBMITTALS

A. Material Certificates: For dimension lumber specified to comply with minimum allowable unit stresses. Indicate species and grade selected for each use and design values approved by the ALSC Board of Review.

B. Evaluation Reports: For the following, from ICC-ES:

1. Wood-preservative-treated wood.
2. Power-driven fasteners.
3. Powder-actuated fasteners.
4. Metal framing anchors.

1.5 QUALITY ASSURANCE

A. Testing Agency Qualifications: For testing agency providing classification marking for fire-retardant treated material, an inspection agency acceptable to authorities having jurisdiction that periodically performs inspections to verify that the material bearing the classification marking is representative of the material tested.

1.6 DELIVERY, STORAGE, AND HANDLING

A. Stack lumber flat with spacers beneath and between each bundle to provide air circulation. Protect lumber from weather by covering with waterproof sheeting, securely anchored. Provide for air circulation around stacks and under coverings.

PART 2 - PRODUCTS

2.1 WOOD PRODUCTS, GENERAL

A. Lumber: DOC PS 20 and applicable rules of grading agencies indicated. If no grading agency is indicated, provide lumber that complies with the applicable rules of any rules-writing agency certified by the ALSC Board of Review. Provide lumber graded by an agency certified by the ALSC Board of Review to inspect and grade lumber under the rules indicated.

1. Factory mark each piece of lumber with grade stamp of grading agency.
2. For exposed lumber indicated to receive a stained or natural finish, mark grade stamp on end or back of each piece or omit grade stamp and provide certificates of grade compliance issued by grading agency.
3. Where nominal sizes are indicated, provide actual sizes required by DOC PS 20 for moisture content specified. Where actual sizes are indicated, they are minimum dressed sizes for dry lumber.
4. Provide dressed lumber, S4S, unless otherwise indicated.

B. Maximum Moisture Content of Lumber: 19 percent unless otherwise indicated.

2.2 WOOD-PRESERVATIVE-TREATED LUMBER

A. Preservative Treatment by Pressure Process: AWPA U1; Use Category UC2 for interior construction not in contact with the ground, Use Category UC3b for exterior construction not in contact with the ground, and Use Category UC4a for items in contact with the ground.

1. Preservative Chemicals: Acceptable to authorities having jurisdiction and containing no arsenic or chromium.
2. For exposed items indicated to receive a stained or natural finish, use chemical formulations that do not require incising, contain colorants, bleed through, or otherwise adversely affect finishes.

B. Kiln-dry lumber after treatment to a maximum moisture content of 19 percent. Do not use material that is warped or that does not comply with requirements for untreated material.

C. Mark lumber with treatment quality mark of an inspection agency approved by the ALSC Board of Review.

1. For exposed lumber indicated to receive a stained or natural finish, mark end or back of each piece or omit marking and provide certificates of treatment compliance issued by inspection agency.

D. Application: Treat items indicated on Drawings, and the following:

1. Wood cants, nailers, curbs, equipment support bases, blocking, stripping, and similar members in connection with roofing, flashing, vapor barriers, and waterproofing.
2. Wood sills, sleepers, blocking, and similar concealed members in contact with masonry or concrete.
3. Wood framing and furring attached directly to the interior of below-grade exterior masonry or concrete walls.
4. Wood framing members that are less than 18 inches above the ground in crawlspaces or unexcavated areas.
5. Wood floor plates that are installed over concrete slabs-on-grade.

2.3 DIMENSION LUMBER FRAMING

A. Rafters and Other Framing: No. 2 grade.

1. Species: Mixed southern pine: SPIB.

B. Exposed Framing: Provide material hand-selected for uniformity of appearance and freedom from characteristics, on exposed surfaces and edges, that would impair finish appearance, including decay, honeycomb, knot-holes, shake, splits, torn grain, and wane.

1. Application: Exposed exterior framing indicated to receive a stained or natural finish.
2. Species and Grade: Southern pine; No. 2 grade; SPIB.

2.4 TIMBER FRAMING

A. Provide timber framing complying with the following requirements, according to grading rules of grading agency indicated:

1. Species and Grade: Southern pine; No. 2 grade; SPIB.
2. Maximum Moisture Content: 20 percent.
3. Additional Restriction: Free of heart centers.

2.5 MISCELLANEOUS LUMBER

A. General: Provide miscellaneous lumber indicated and lumber for support or attachment of other construction, including the following:

1. Blocking.
2. Nailers.

3. Cants.
4. Furring.
5. Grounds.
6. Utility shelving.

B. For items of dimension lumber size, provide Standard, Stud, or No. 3 grade lumber and the following species:

1. Mixed southern pine; SPIB.

C. For utility shelving, provide lumber with 19 percent maximum moisture content and the following species and grades:

1. Mixed southern pine; No. 2 grade; SPIB.

D. For concealed boards, provide lumber with 19 percent maximum moisture content and the following species and grades:

1. Mixed southern pine; No. 2 grade; SPIB.

E. For blocking not used for attachment of other construction, Utility, Stud, or No. 3 grade lumber of any species may be used provided that it is cut and selected to eliminate defects that will interfere with its attachment and purpose.

F. For blocking and nailers used for attachment of other construction, select and cut lumber to eliminate knots and other defects that will interfere with attachment of other work.

G. For furring strips for installing plywood or hardboard paneling, select boards with no knots capable of producing bent-over nails and damage to paneling.

2.6 PLYWOOD BACKING PANELS

A. Equipment Backing Panels: DOC PS 1, Exterior, AC, in thickness indicated or, if not indicated, not less than 3/4-inch nominal thickness.

2.7 FASTENERS

A. General: Provide fasteners of size and type indicated that comply with requirements specified in this article for material and manufacture.

1. Where rough carpentry is exposed to weather, in ground contact, pressure-preservative treated, or in area of high relative humidity, provide fasteners with hot-dip zinc coating complying with ASTM A 153.

B. Nails, Brads, and Staples: ASTM F 1667.

C. Power-Driven Fasteners: NES NER-272.

D. Wood Screws: ASME B18.6.1.

E. Lag Bolts: ASME B18.2.1.

F. Bolts: Steel bolts complying with ASTM A 307, Grade A; with ASTM A 563 hex nuts and, where indicated, flat washers.

2.8 METAL FRAMING ANCHORS

A. Manufacturers: Subject to compliance with requirements, available manufacturers offering products that may be incorporated into the Work include, but are not limited to, the following:

1. Cleveland Steel Specialty Co.
2. KC Metals Products, Inc.
3. Phoenix Metal Products, Inc.
4. Simpson Strong-Tie Co., Inc.
5. USP Structural Connectors.

B. Allowable Design Loads: Provide products with allowable design loads, as published by manufacturer, that meet or exceed those indicated. Manufacturer's published values shall be determined from empirical data or by rational engineering analysis and demonstrated by comprehensive testing performed by a qualified independent testing agency.

C. Galvanized-Steel Sheet: Hot-dip, zinc-coated steel sheet complying with ASTM A 653, G60 coating designation.

1. Use for interior locations unless otherwise indicated.

D. Hot-Dip, Heavy-Galvanized Steel Sheet: ASTM A 653; structural steel (SS), high-strength low-alloy steel Type A (HSLAS Type A), or high-strength low-alloy steel Type B (HSLAS Type B); G185 coating designation; and not less than 0.036 inch thick.

1. Use for wood-preservative-treated lumber and where indicated.

2.9 MISCELLANEOUS MATERIALS

A. Sill-Sealer Gaskets: Closed-cell neoprene foam, 1/4 inch thick, selected from manufacturer's standard widths to suit width of sill members indicated.

B. Adhesives for Gluing Furring and Sleepers to Concrete or Masonry: Formulation complying with ASTM D 3498 that is approved for use indicated by adhesive manufacturer.

C. Water-Repellent Preservative: NWWDA-tested and -accepted formulation containing 3-iodo-2-propynyl butyl carbamate, combined with an insecticide containing chloropyrifos as its active ingredient.

PART 3 - EXECUTION

3.1 INSTALLATION, GENERAL

A. Set rough carpentry to required levels and lines, with members plumb, true to line, cut, and fitted. Fit rough carpentry to other construction; scribe and cope as needed for accurate fit. Locate furring, nailers, blocking, grounds, and similar supports to comply with requirements for attaching other construction.

B. Framing Standard: Comply with AF&PA's WCD 1, "Details for Conventional Wood Frame Construction," unless otherwise indicated.

C. Framing with Engineered Wood Products: Install engineered wood products to comply with manufacturer's written instructions.

D. Install plywood backing panels by fastening to studs; coordinate locations with utilities requiring backing panels.

E. Metal Framing Anchors: Install metal framing anchors to comply with manufacturer's written instructions. Install fasteners through each fastener hole.

F. Install sill sealer gasket to form continuous seal between sill plates and foundation walls.

G. Do not splice structural members between supports unless otherwise indicated.

H. Provide blocking and framing as indicated and as required to support facing materials, fixtures, specialty items, and trim.

I. Sort and select lumber so that natural characteristics will not interfere with installation or with fastening other materials to lumber. Do not use materials with defects that interfere with function of member or pieces that are too small to use with minimum number of joints or optimum joint arrangement.

J. Comply with AWPA M4 for applying field treatment to cut surfaces of preservative-treated lumber.

   1. Use inorganic boron for items that are continuously protected from liquid water.
   2. Use copper naphthenate for items not continuously protected from liquid water.

K. Securely attach rough carpentry work to substrate by anchoring and fastening as indicated, complying with the following:

   1. NES NER-272 for power-driven fasteners.
   2. Table 2304.9.1, "Fastening Schedule," in ICC's International Building Code.

L. Use steel common nails unless otherwise indicated. Select fasteners of size that will not fully penetrate members where opposite side will be exposed to view or will receive finish materials. Make tight connections between members. Install fasteners without splitting wood. Drive nails snug but do not countersink nail heads unless otherwise indicated.

M. For exposed work, arrange fasteners in straight rows parallel with edges of members, with fasteners evenly spaced, and with adjacent rows staggered.

   1. Comply with approved or indicated fastener patterns where applicable. Before fastening, mark fastener locations, using a template made of sheet metal, plastic, or cardboard.
   2. Use finishing nails unless otherwise indicated. Countersink nail heads and fill holes with wood filler.

3.2 WOOD SLEEPER, BLOCKING, AND NAILER INSTALLATION

A. Install where indicated and where required for attaching other work. Form to shapes indicated and cut as required for true line and level of attached work. Coordinate locations with other work involved.

B. Attach items to substrates to support applied loading. Recess bolts and nuts flush with surfaces unless otherwise indicated.

3.3 PROTECTION

A. Protect rough carpentry from weather. If, despite protection, rough carpentry becomes wet apply EPA-registered borate treatment. Apply borate solution by spraying to comply with EPA-registered label.

END OF SECTION

SECTION 09900
PIPING AND EQUIPMENT COATINGS AND PAINTING

PART 1- GENERAL

1.1 SUMMARY

A. Scope

1. The contractor shall furnish all materials, labor, equipment, and incidentals required to provide a protective coating system listed herein and not otherwise excluded.

2. All areas in this project shall be considered harsh service rated.

1.2 WORK INCLUDED

A. The work includes painting and finishing of interior and exterior pipe, valves, fittings and equipment and miscellaneous metals and all other work obviously required to be painted unless otherwise specified herein or on the drawings, including all existing piping and equipment. The omission of minor items in the schedule of work shall not relieve the contractor of his obligation to include such items where they come within the general intent of the specification as stated herein.

B. The following items will not be painted:

1. Any code requiring labels, such as Underwriters' Laboratories and Factory Mutual, or any equipment identification, performance rating, name or nomenclature plates.

2. Any moving parts of operating units, mechanical and electrical parts, such as valve and damper operators, linkages, sensing devices, motor and fan shafts, unless otherwise indicated.

3. Signs and nameplates.

4. Galvanized piping, pipe supports, and appurtenances.

5. Stainless steel piping, pipe supports and appurtenances.

6. Aluminum items (Aluminum embedded items shall be coated where embedded in concrete for corrosion protection).

1.3 SUBMITTALS

A. Provide submittals in accordance with Division 1.

B. Shop Drawings

1. The Contractor shall submit complete shop drawings of all materials furnished for this project as covered by these specifications. The contractor's submittal must include a certification that the submitted material describes exactly the materials to be provided or a list of deviations from the specifications with an explanation of each deviation.

C. Samples:

1. Samples of each finish and color shall be submitted to the Architect/Engineer for approval before any work is started.

2. Such samples when approved in writing shall constitute a standard, as to color and finish only, for acceptance or rejection of the finish work.

1.4 QUALITY ASSURANCE

A. Manufacturer's Qualifications:
Manufacturers regularly engaged in the manufacture of the coatings as specified herein and who can demonstrate coatings of the specified product in actual service for a period of not less than 10 years will be considered as acceptable manufacturers.

B. Workmanship shall be performed by skilled workmen thoroughly trained in necessary crafts and completely familiar with specific requirements and methods specified herein.

C. All materials shall be produced by a single manufacturer. Total paint system shall be from one manufacturer and no cross coating allowed between primers and finish coats.

D. Component Compatibility

1. Contractor and coating manufacturer shall coordinate with pipe valves and equipment to ensure compatibility of top coats with manufacturer's primers and topcoats.

E. VOC Requirements

1. Submit manufacturer's certification that paints and coatings comply with Federal, State, and Local, whichever is more stringent, requirements for VOC (Volatile Organic Compound)

1.5 WARRANTY

A. Warranty shall be in accordance with Division 1.

1.6 DELIVERY, HANDLING AND STORAGE

A. Deliver all material to site in original, new, unopened containers, labeled and bearing manufacturer's name and stock number, product and brand name, contents by volume for major constituents, instructions for mixing and reducing, and application instruction.

B. Provide adequate storage facilities designed exclusively for the purpose of paint storage and mixing. Facility area shall be located away from open flames, be well ventilated, and be capable of maintaining ambient storage temperature of no less than 45 degrees F.

C. Paint, coatings, reducing agents, and other solvents must be stored in original containers until opened; if not reseal able, then must be transferred to UL approved safety containers. Provide proper ventilation, personal protection, and fire protection for storage and use of same.

D. Comply with requirements set forth by Occupational Safety and Health Act, OSHA, for storage and use of painting materials and equipment.

1.7 EXTRA STOCK

A. Upon completion of work, provide owner with at least one gallon of each type and color of product used.

B. Containers shall be tightly sealed and clearly labeled for identification.

1.8 References

A. A. SSPC: Steel Structures Painting Council

PART 2- PRODUCTS

2.1 ACCEPTABLE SYSTEMS AND MANUFACTURERS

A. General: Paint products/systems specified are not intended to limit competition, but to establish a standard of quality desired. The owner will consider equivalent systems by other manufacturers.

2.2 MATERIALS

A. All materials specified herein are manufactured by Sherwin Williams Company or Tnemec Company, Inc., North Kansas City, Missouri.

B. Equivalent materials of other manufacturers may be substituted on approval of the Owner's Representative. Request for substitution shall include manufacturer's literature for each product giving name, generic type, descriptive information, performance and test data, and evidence of satisfactory past performance. No request for substitution shall be considered that would decrease film thickness and/or number of coats or offer a change in the generic type of coating specified.

2.3 COATING SCHEDULE for SHOP PRIMED SURFACES

A. Interior and Exterior Harsh Service

1. Surface Preparation:

a. Remove all oil and grease from surface by solvent cleaning per SSPC-SP-1.

b. Hand tool clean per SSPC-SP-2 or power tool clean per SP-3 where shop prime coat has been damaged.

2. Primer: B50WZ0001 - Kem Kromik Universal Metal Primer, dry film thickness - 3-4 mils. For touch up of shop primed surfaces.

3. Second Coat: Macropoxy 646 or 646PW (for potable water) Fast Cure epoxy dry film thickness – 4-6 mils

4. Third Coat: Macropoxy 646 or 646PW (for potable water) Fast Cure epoxy dry film thickness – 4-6 mils

2.4 COATING SCHEDULE for BARE STEEL DUCTILE IRON SURFACES

A. Surface Preparation:

1. Remove all oil and grease from surface by solvent cleaning per SSPC-SP-1.

2. Hand tool clean per SSPC-SP-2, power tool clean per SP-3 or sand blast per SP-6.

B. B. Primer: B50WZ0001 - Kem Kromik Universal Metal Primer, dry film thickness - 3-4 mils.

C. Second and Third coats shall be as per above for shop primed surfaces.

PART 3- EXECUTION

3.1 INSPECTION

A. Thoroughly examine surface scheduled to be painted prior to commencing work. Report in writing to the Owner's Representative any condition that may affect proper application and overall performance of coating system. Do not proceed with work until such conditions have been corrected. Commencing with work indicates acceptance of existing conditions and for responsibility for performance of applied coating.

3.2 PROTECTION

A. Extreme diligence shall be taken to ensure that vehicles, equipment, hardware, fixtures, materials, etc., are protected against paint spillage, overspray, etc. Such damages shall be corrected at no expense to Owner.

B. Surfaces not to be coated shall be masked, removed, or otherwise covered to protect against cleaning and coating application procedures and weather. Drop cloths shall be used to protect floor, walls, machinery, equipment, and previously coated surfaces.

C. Exercise care in erecting, bracing, handling, and dismantling staging and scaffolding, to avoid scratching or damaging walls, floors, equipment, etc.

3.3 SURFACE PREPARATION

A. Perform preparation and cleaning procedures in strict accordance with manufacturer's instructions for each substrate condition.

3.4 TOUCH UP OF SHOP APPLIED COATINGS

A. All shop applied coatings with manufacturer's standard paint and in non-immersion service, shall be touched up with manufacturer's coating.

3.5 APPLICATION

A. No paint shall be applied when surrounding air temperature, as measured in the shade, is below 45 degrees F. No paint shall be applied when the temperature of the surface to be painted is below 40 degrees F. Paint shall not be applied to wet or damp surfaces, and shall not be applied in rain, snow, fog or mist, or when the relative humidity exceeds 85%. Paint shall not be applied when the substrate temperature is within 5 degrees of the dew point. Paint manufacturer's temperature guidelines must be followed.

B. No paint shall be applied when it is expected that the relative humidity will exceed 85% or that the air temperature will drop below 45 degrees F within 4 hours after the application of the paint.

C. Maintain proper ventilation in area of work to alleviate volatile solvents evaporating from coating materials.

D. All ingredients in any container of the coating materials shall be thoroughly mixed and shall be agitated often enough during application to keep the pigment suspended.

E. Should thinning be required use only the amounts specified by the coating manufacturer.

F. Application of coating shall be by brush, roller, mitt, or spray and in accordance with manufacturer's recommendations. All material shall be evenly applied to form a smooth, continuous, unbroken coating. Drips, runs, sags, or pinholes shall not be acceptable.

G. Provide proper application equipment, including ladders, scaffolding, masking materials, and tools to perform work. Ladders and scaffolding shall meet or exceed UL requirements and Metal Ladder Manufacturer's Association.

H. Second coat shall be tinted slightly to differentiate between the second coat and third (final) coat.

I. Meet all requirements set forth by Occupational Safety and Health Act, OSHA, for confined space.

3.6 SYSTEM INSPECTION AND TESTING

A. After application of each coating in the specified system and its surface has cured, measure its thickness with a properly calibrated Nordson Microtest Dry Film Thickness Gauge, or equivalent. Follow standard method for measurement of dry paint thickness with magnetic gauges as outlined in Steel Structures Painting Council's SSPC PA2.

B. Make as many determinations as needed to ensure the specified thickness values in each typical area. To all surfaces having less dry film thickness than specified, apply additional coat(s) at no extra cost to Owner to bring thickness up to specifications.

C. Structural metals in immersion service that receive a protective coating system shall be checked with a non-destructive holiday detector that shall not exceed 67 1/2 volts. All pinholes or defects shall be repaired in accordance with manufacturer's printed recommendations and then retested.

D. Painting contractor shall permit Owner's Representative and/or paint & coating manufacturer (as requested by owner) to inspect his work for conformance to this specification. Owner reserves the right to reject all work that does not comply with this specification.

3.7 CLEAN UP

A. Upon completion, painting contractor shall clean up and remove from site all surplus materials, tools, appliances, empty cans, cartons, and rubbish resulting from painting work. Site shall be left in neat, orderly condition.

B. Remove all protective drop cloths and masking from surfaces not being painted. Provide touch up around same areas as directed by Owner's Representative.

C. Remove all misplaced paint splatters or drippings resulting from this work.

END OF SECTION

SECTION 09920
COATING FOR STEEL WATER STORAGE TANK

PART 1- GENERAL

1.1 SECTION INCLUDES

A. Cleaning, abrasive blast cleaning and painting of all interior wet, interior dry, and exterior steel surfaces.

B. Work also includes disinfection of the tank after coating.

1.2 RELATED SECTION: SECTION 13100 – ELEVATED STORAGE TANK

1.3 REFERENCES

A. ANSI/NSF 61 - Drinking Water System Components - Health Effects.
B. ASTM D 16 - Terminology Relating to Paint, Varnish, Lacquer, and Related Products.
C. AWWA C 652 - Disinfection of Water-Storage Facilities.
D. AWWA D 102- Painting Steel Water Storage Tanks.
E. 40 CFR, Part 63, Subpart MMMM - National Emission Standards for Hazardous Air Pollutants (NESHAPs) for Surface Coating of Miscellaneous Metal Parts and Products
F. NACE SP0188 Discontinuity (Holiday) Testing of New Protective Coatings on Conductive Substrates.
G. SSPC-PA 2 - Measurement of Dry Coating Thickness with Magnetic Gages.
H. SSPC-SP 6/NACE 3 - Commercial Blast Cleaning.
I. SSPC-SP 10/NACE 2 - Near-White Blast Cleaning.
J. SSPC-SP 11 - Power Tool Cleaning to Bare Metal
K. SSPC-SP 15 – Commercial Grade Power Tool Cleaning
L. SSPC-TU 11 - Inspection of Fluorescent Coating Systems

1.4 DEFINITIONS

A. Definitions of Painting Terms: ASTM D 16, unless otherwise specified.

B. Dry Film Thickness (DFT): Thickness of a coat of cured paint measured in mils (1/1000 inch).

1.5 SUBMITTALS

A. Comply with Division 1.

B. PRODUCT DATA

1. Submit Coating Manufacturer's product data for each coating, including generic description, complete technical data, surface preparation, and application instructions.

C. COLOR SAMPLES

1. Submit samples of the color specified for owner approval.

1.6 QUALITY ASSURANCE

A. COATING MANUFACTURER'S QUALIFICATIONS

1. Specialize in manufacture of coatings with a minimum of 10 years successful experience.
2. Able to demonstrate successful performance on comparable projects.
3. Single Source Responsibility: Coatings and coating application accessories shall be products of a single Coating Manufacturer.

B. APPLICATOR'S QUALIFICATIONS

1. Experienced in application of specified coatings for a minimum of 5 years on projects of similar size and complexity to this Work.
2. Applicator's Personnel: Employ persons trained for application of specified coatings.

C. FIELD PAINTING PRE-APPLICATION MEETING

1. Convene a pre-application meeting before the start of field surface preparation and coating application. Require attendance of parties directly affecting work of this section, including the Engineer, Applicator, and Coating Manufacturer's representative. Review the following:
   a. Environmental requirements.
   b. Protection of surfaces not scheduled to be coated.
   c. Surface preparation.
   d. Application.
   e. Disinfection.
   f. Repair.
   g. Field quality control.
   h. Cleaning.
   i. Protection of coating systems.
   j. First anniversary inspection.
   k. Coordination with other work.

D. DELIVERY, STORAGE, AND HANDLING

1. Delivery: Deliver materials to site in Coating Manufacturer's original, unopened containers and packaging, with labels clearly identifying:
   a. Coating or material name.
   b. Coating Manufacturer.
   c. Color name and number.
   d. Batch or lot number.
   e. Date of manufacture.
   f. Mixing and thinning instructions.
2. Storage:
   a. Store materials in a clean, dry area, and within temperature range in accordance with Coating Manufacturer's instructions.

b. Keep containers sealed until ready for use.
c. Do not use materials beyond Coating Manufacturer's shelf life limits.

3. Handling: Protect materials during handling and application to prevent damage or contamination.

1.7 ENVIRONMENTAL REQUIREMENTS

A. WEATHER

1. Air and Surface Temperatures: Prepare surfaces and apply and cure coatings within air and surface temperature range in accordance with Coating Manufacturer's instructions.
2. Surface Temperature: Maintain surfaces temperatures a minimum of 5 degrees F (3 degrees C) above dew point at the time of final surface preparation, material mixing, and application.
3. Relative Humidity: Prepare surfaces and apply and cure coatings within relative humidity range in accordance with Coating Manufacturer's instructions.
4. Precipitation: Do not prepare surfaces or apply coatings in rain, snow, fog, or mist.
5. Wind: Do not spray coatings if wind velocity is above Coating Manufacturer's limit.

B. VENTILATION

1. Provide ventilation during coating evaporation stage in confined or enclosed areas in accordance with AWWA D102-11, Section A.7.6. Forced air ventilation shall be maintained for a minimum of four (4) days following interior coating application to assist in the curing process.

C. DUST AND CONTAMINANTS

1. Schedule coating work to avoid excessive dust and airborne contaminants.
2. Protect work areas from excessive dust and airborne contaminants during coating application and curing.

PART 2- PRODUCTS

2.1 MANUFACTURERS: ACCEPTABLE COATING MANUFACTURERS

A. SHERWIN-WILLIAMS PRODUCTS SHALL BE USED AS THE GUIDE BELOW.

B. TNEMEC IS ALSO APPROVED EQUAL PAINT SUPPLIER.

C. INDURON IS ALSO APPROVED EQUAL PAINT SUPPLIER.

2.2 SHOP PRIMERS

A. All shop applied primers shall comply with Title 40 Code of Federal Regulations, Part 63, Subpart MMMM, National Emission Standards for Hazardous Air Pollutants (NESHAPs) for Surface Coating of Miscellaneous Metal Parts and Products, which establish a hazardous air pollutant (HAP) emission limit of 2.6 pounds of HAP per gallon solids.

2.3 OAP:

A. For immersion surfaces, Opt-Check optically activated pigment (OAP) technology is strongly recommended for rapid holiday detection in accordance with SSPC-TU 11.

2.4 COATING SYSTEMS FOR INTERIOR WET STEEL (WATER CONTAINER)

A. SYSTEM:

1. Epoxy - Epoxy - Epoxy.

B. AWWA D102 PAINT SYSTEM:

1. ICS-2.

C. ANSI/NSF 61 CERTIFIED:

1. For use inside potable water storage tanks.

D. SURFACE PREPARATION:

1. SSPC-SP 10.

E. SHOP PRIME COAT:

1. Immediately after blasting and before any rusting occurs, apply one coat of Sherwin-Williams Copoxy Shop Primer, B62Y110 to all bare steel surfaces. This coating shall be applied at a dry film thickness of 3.0 to 5.0 mils. If flash rust occurs prior to priming, the areas must be re-blasted prior to primer application.

F. FIELD PRIME COAT (FOR WELDS AND DAMAGED AREAS):

1. Immediately after blasting and before any rusting occurs, apply one coat of Sherwin-Williams Macropoxy 646 PW to all bare steel surfaces. This coating shall be applied at a dry film thickness of 3.0 to 5.0 mils. If flash rust occurs prior to priming, the areas must be re-blasted prior to primer application.

G. INTERMEDIATE COAT:

1. Apply one complete coat of Sherwin-Williams Macropoxy 646 PW*. This coating shall be applied at a dry film thickness of 4.0 to 6.0 mils. Color to contrast with primer and topcoat. B58VX605 hardener with Opti-Check OAP pigment technology may be used for rapid holiday detection with safe blue light inspection lamps.

H. FINISH COAT:

1. Apply one complete coat of Sherwin-Williams Macropoxy 646 PW* at a dry film thickness of 5.0 to 6.0 mils.

I. TOTAL DFT:

1. Minimum 12.0 mils. * Spray apply Dura-Plate UHS or SherPlate PW for one coat field application.

2.5 COATING SYSTEMS FOR INTERIOR DRY STEEL (DRY RISER, ACCESS TUBE, AND PEDESTAL INTERIOR)

A. SYSTEM:

1. Epoxy - Epoxy.

B. SURFACE PREPARATION:

1. SSPC-SP 6.

C. SHOP PRIME COAT:

1. Immediately after blasting and before any rusting occurs, apply one coat of Sherwin-Williams Copoxy Shop Primer, B62Y110 to all bare steel surfaces. This coating shall be applied at a dry film thickness of 3.0 to 5.0 mils. If flash rust occurs prior to priming, the areas must be re-blasted prior to primer

application.

D. FIELD PRIME COAT (FOR WELDS AND DAMAGED AREAS):

1. Immediately after blasting and before any rusting occurs, apply one coat of Sherwin-Williams Macropoxy 646 PW to all bare steel surfaces. This coating shall be applied at a dry film thickness of 3.0 to 5.0 mils. If flash rust occurs prior to priming, the areas must be re-blasted prior to primer application.

E. FINISH COAT:

1. Apply one complete coat of Sherwin-Williams Macropoxy 646 PW at a dry film thickness of 5.0 to 6.0 mils.

F. TOTAL DFT:

1. Minimum 8.0 mils.

2.6 COATING SYSTEMS FOR EXTERIOR STEEL

A. SYSTEM:

1. Zinc – Epoxy - Urethane.

B. AWWA D102 PAINT SYSTEM:

1. OCS-6.

C. SURFACE PREPARATION:

1. SSPC-SP 6.

D. SHOP PRIME COAT:

1. Immediately after blasting and before any rusting occurs, apply one coat of Sherwin-Williams Corothane I Galvapac Zinc Primer to all bare steel surfaces. This coating shall be applied at a minimum dry film thickness of 3.0 to 4.0 mils. If flash rust occurs prior to priming, the areas must be re-blasted prior to primer

application.

E. FIELD PRIME COAT (FOR WELDS AND DAMAGED AREAS):

1. Immediately after blasting and before any rusting occurs, apply one coat of Sherwin-Williams Corothane I Galvapac Zinc Primer to all bare steel surfaces. This coating shall be applied at a dry film thickness of 3.0 to 4.0 mils. If flash rust occurs prior to priming, the areas must be re-blasted prior to primer application.

F. INTERMEDIATE COAT:

1. Apply one complete coat of Sherwin-Williams Macropoxy 646 Fast Cure Epoxy. This coating shall be applied at a dry film thickness of 3.0 to 5.0 mils.

G. FINISH COAT:

1. Apply one complete coat of Sherwin-Williams Acrolon Ultra or Hi-Solids Polyurethane at a dry film thickness of 2.0 to 3.0 mils. Certain finish coat colors may require two coats depending upon the method of application and color of the intermediate coat. Use Hi-Solids Polyurethane, UV Resistant, Mildew Resistant, MR White where mildew is an issue. Total DFT: Minimum 8.0 mils.

H. FINISH COLOR AND GLOSS:

1. Contractor shall coordinate with Owner for the selection of the finish color.

I. LOGOS AND ACCENT COLORS:

1. Sherwin-Williams FluoroKem at a dry film thickness 2.0 – 3.0 mils per coat. Certain colors may require two coats.

2.7 COLD TEMPERATURES

A. Sherwin-Williams Dura-Plate 235 PW may be substituted for Macropoxy 646 when surface temperatures are below 40 degrees F.

2.8 CAULK

A. NO CAULKING ALLOWED – ALL WELDS INSIDE AND OUT MUST BE SEAL-WELDED, INCLUDING WELDS OF THE EXTERIOR BALCONY.

PART 3- EXECUTION

3.1 EXAMINATION

A. Examine areas and conditions under which coating systems are to be applied. Notify General Contractor and Engineer of areas or conditions not acceptable. Do not begin surface preparation or application until unacceptable areas or conditions have been corrected.

3.2 PROTECTION OF SURFACES NOT SCHEDULED TO BE COATED

A. Protect surrounding areas and surfaces not scheduled to be coated from damage during surface preparation and application of coatings.

B. Immediately remove coatings that fall on surrounding areas and surfaces not scheduled to be coated.

3.3 SURFACE PREPARATION

A. Prepare steel surfaces in accordance with Coating Manufacturer's instructions.

B. Ensure surfaces are dry.

C. Interior Substrate: Remove visible oil, grease, dirt, dust, mill scale, rust, paint, oxides, corrosion products, and other foreign matter in accordance with SSPC-SP 10/NACE 2. Create a blast profile in accordance with the Coating Manufacturer's recommendations.

D. Exterior Substrate: Remove visible oil, grease, dirt, dust, mill scale, rust, paint, oxides, corrosion products, and other foreign matter in accordance with SSPC-SP 6/NACE 3. Create a blast profile in accordance with the Coating Manufacturer's recommendations.

E. Prior to field touch up of shop primed steel, all surfaces shall be cleaned to remove all surface contamination including oil, grease, dust, dirt and foreign matter. All rusted, abraded, and unpainted areas on the interior wet area shall be abrasive blast cleaned to a near white finish in accordance with SSPC-SP 10/NACE 2. All other rusted, abraded and unpainted areas shall be either abrasive blast cleaned in accordance with SSPC-SP 6/NACE 3. SSPC- SP11 or SP15 may be used for small areas (less than one square foot).

F. Shop primed steel shall receive a field sweep blast prior to the application of subsequent coats.

G. Abrasive Blast-Cleaned Surfaces: Coat abrasive blast-cleaned surfaces with primer before visible rust forms on surface. If rust or any other visible contamination appears as a result of delay in primer application, the surface shall be re-cleaned to specified surface preparation.

3.4 APPLICATION

A. Apply coatings in accordance with Coating Manufacturer's instructions.

B. Mix and thin coatings, including multi-component materials, in accordance with Coating Manufacturer's instructions.

C. Keep containers closed when not in use to avoid contamination.

D. Do not use mixed coatings beyond pot life limits.

E. Use application equipment, tools, pressure settings, and techniques in accordance with manufacturer's instructions.

F. After sufficient cure of the field primer, brush apply a stripe coat to critical locations on steel such as welds, corners, and edges using specified intermediate coat.

G. Uniformly apply coatings at spreading rate required to achieve specified DFT.

H. Apply coatings to be free of film characteristics or defects that would adversely affect performance of the coating system. Apply exterior coatings to be free of film characteristics or defects that adversely affect appearance.

I. INTERIOR:

1. Caulk NOT ACCEPTED. All roof seams, connections, and crevices MUST BE SEAL WELDED to prevent corrosion and staining.

3.5 REPAIR

A. DAMAGED MATERIALS:

1. Repair or replace damaged materials and surfaces not scheduled to be coated.

B. DAMAGED COATINGS:

1. Touch-up or repair damaged coatings. Touch-up of minor damage shall be acceptable where result is not visibly different from adjacent surfaces.

C. COATING DEFECTS:

1. Repair in accordance with Coating Manufacturer's instructions coatings that exhibit film characteristics or defects that would adversely affect performance or appearance of coating systems.

3.6 FIELD QUALITY CONTROL

A. REQUIRED APPLICATOR INSPECTIONS AND DOCUMENTATION:

1. Verify coatings and other materials are as specified.
2. Verify environmental conditions are as specified.
3. Verify surface preparation and application are as specified.
4. Verify DFT of each coat and total DFT of each coating system are as specified using wet film and dry film gauges. DFT's shall be measured in accordance with SSPC-PA2.
5. Coating Defects:
   a. Check coatings for film characteristics or defects that would adversely affect performance of coating systems.
   b. Check exterior finish for film characteristics or defects that adversely affect appearance.
   c. Check for holidays on steel immersion surfaces using a holiday detector in accordance with NACE SP0188-06 or with safe blue light inspection lamps if B58VX605 hardener with Opti-Check OAP pigment technology is used.
6. Report:
   a. Prepare inspection reports daily.
   b. Submit written reports describing inspections made and actions taken to correct nonconforming work.
   c. Report nonconforming work not corrected.
   d. Submit copies of report to Engineer and Owner

B. COATING MANUFACTURER'S FIELD SERVICES:

1. Coating Manufacturer's representative shall provide technical assistance and guidance for surface preparation, application, and repair of coating systems.
2. Coating Manufacturer's representative shall provide certification that the coatings were applied per manufacturer's recommendations.

3.7 CLEANING

A. After completion of painting, remove all traces of splashed materials, paint droppings, and spots from finished and adjacent surfaces.
B. Remove temporary coverings and protection of surrounding areas and surfaces.

3.8 FIRST ANNIVERSARY INSPECTION

A. Owner will set date for one-year inspection of coating systems.
B. Owner will be responsible for draining the tank prior to the inspection. Owner will be responsible for system operation and pressure maintenance during the inspection and repair, if any.

C. Inspection shall be attended by Owner, Engineer, Applicator, and Coating Manufacturer's representative.

D. Repair deficiencies in coating systems as determined by Engineer in accordance with Coating Manufacturer's instructions.

END OF SECTION

SECTION 11100
PROCESS PIPING

PART 1- GENERAL

1.1 SUMMARY

A. This section is intended to define the required quality standards of the materials furnished and the workmanship performed in connection with the herein specified items of piping and all the required accessories and appurtenances including, in part, all labor, tools, materials and equipment for the complete piping work for this contract which are not defined elsewhere in the Specifications or on the Drawings.

1. All pipe less than 2" shall be copper (Type K or L), PVC schedule 80, CPVC schedule 80 or 304 stainless steel schedule 40 where indicated on the drawings unless otherwise noted.

2. All pipe 3" and larger shall be DI, unless otherwise noted.

3. Piping material shall be as indicated on the pipe schedule located on the drawings if provided.

1.2 RELATED DOCUMENTS

A. Drawings and general provisions of the Contract, including General Conditions and Supplemental General Conditions and Division 1 Specifications Sections apply to this section.

1.3 SUBMITTALS

A. Submittals shall be in accordance with Division 1.

B. Manufacturer's data shall be submitted for all pipe and fittings for approval prior to purchasing. Data shall indicate compliance with specifications including thickness, materials, working pressure and joints.

C. Spool drawings and dimensioned layout drawings shall be submitted for approval for all ductile iron flanged pipe. Approval by the ENGINEER will be for general layout and not for exact dimensions. CONTRACTOR is responsible for dimensions of spool drawings.

1.4 Warranty

A. Warranty shall be in accordance with Division 1.

B. The project shall not be considered substantially complete until all testing has been completed per this section.

1.5 OPERATION AND MAINTENANCE DATA

A. Operation and Maintenance Data shall be in accordance with Division 1.

PART 2- PRODUCTS

2.1 DUCTILE IRON PIPE

A. General: Ductile iron pipe (DIP) shall be centrifugally cast in metal molds or sand-lined molds. The jointed sections of the piping shall be so placed as to allow for maintenance and to permit units and equipment connected to these systems to be removed without disturbance to the main piping systems. All ductile iron pipe and fittings shall have the weight and class clearly designated on the exterior of each length or fitting with white paint and the trade mark of the manufacturer and the year cast into or on the hub.

B. Pipe and Fittings: Ductile iron pipe and fittings shall conform to the latest revision of AWWA/ANSI C115/A21.15 for flanged pipe and AWWA/ANSI C151/A21.51 for mechanical joint pipe. All pipe and fittings shall be minimum pressure class 250 unless otherwise called for on the plans. Pipe and fittings shall be cement-lined in accordance with the latest revision of AWWA/ANSI C104/A21.4.

C. Polywrap Polyethylene Encasement shall be provided around the entire length of waterline. The encasement shall conform to the following:

1. 8 mil minimum, group 2, linear low density, flat tube, virgin polyethylene film and shall meet or exceed the requirements of AWWA C105-05, ANSI A21.5-05, ASTM D4976 and NT4112-05.
2. The film shall be marked showing trademark, year of manufacture, type of resin, specification conformance, applicable pipe sizes and a corrosion protection warning.

D. Joints:

1. All exposed fittings within buildings and structures shall be minimum pressure class 250 flanged fittings in accordance with ANSI B16.1/AWWA A21.10 and A21.11.

2. Flanges shall be furnished with factory punched full face gaskets 1/8 inch thick.

3. All underground pipe fittings shall have restrained joints. All pipe fittings, plugs, caps, tees, and bends in underground ductile iron piping must be restrained utilizing Megalug Series 1100 retainer glands by EBAA Iron Sales, Inc. or approved equal. Glands shall be manufactured of ductile iron conforming to ASTM A 536-80 Dimensions of the gland shall be such that it can be used with the standardized mechanical joint bell and tee-head bolts conforming to ANSI/AWWA A21.11 and C153/A21.53. Twist-off nuts shall be used to insure proper actuating of the restraining devices.

4. Ductile iron bell and spigot pipe joints shall be restrained using locking type gaskets unless indicated otherwise on the drawings. If all joints are not required to be restrained the minimum restrained lengths and locations will be indicated on the drawings. Gaskets shall be manufactured by the pipe manufacturer to be compatible with their pipe.

5. Where flexible restrained joint piping (river pipe) is required, the joints shall lock in place but be able to be deflected. Joint shall consist of a restraining locking ring bolted over a steel ring welded to the plain end of the pipe. Other types of restraining joints may be used with approval of the Engineer.

E. Coatings and Linings

1. Underground Pipe

a. Outside Coating - Outside coating shall be a bituminous coating per ANSI A21.51 (AWWA C151). The coating shall be applied to all pipe and fittings.

b. Inside Coating - Inside of the pipe shall be cement-mortar lined in accordance with AWWA/ANSI C104/A21.4 or latest revision thereof.

1) The cement lining shall be given a seal coat of asphaltic material which shall adhere to the mortar lining. After a 48-hour drying time, the seal coat shall have no deleterious effect upon the quality, color, taste or odor of potable water.

2. Exposed Pipe

a. Exposed pipe and fittings shall have a primer compatible with the coatings specified in Division 9. Installed pipe shall be painted in accordance with Division 9

2.2 POLYVINYL CHLORIDE PIPE AND FITTINGS (PVC)

A. All PVC pipe shall be schedule 80 unless otherwise noted.

B. PVC fittings shall be schedule 80 pressure fittings with socket weld or threaded ends. Socket weld cement shall be as recommended by the piping manufacturer. All solvent cements used, conform to ASTM D-2564, listed by NSF for potable use applications.

C. All PVC flanges shall be 150 lb and shall be attached with stainless steel bolts nuts and washers. Washers shall be installed under the bolt head and nut on all PVC flanges.

D. Pipe and fittings shall be listed by the National Sanitation Foundation (NSF) for potable water applications.

2.3 POLYETHYLENE (PE) PIPE

A. 3 Inches and Smaller – Pipe shall be manufactured from a PE 3408 resin listed with the Plastic Pipe Institute (PPI) as TR-4. The resin material will meet the specifications of ASTM D3350-02 with a cell classification of PE:345464C. Pipe shall have a manufacturing standard of ASTM D 3035 iron pipe size, controlled outside diameter. Pipe shall have a pressure class as specified on the plans. The pipe shall contain no recycled compounds except that generated in the manufacturer's own plant from resin of the same specification from the same raw material. All pipes shall be suitable for use as pressure conduits, and per AWWA C901, have nominal burst values of three times the

Working Pressure Rating (WPR) of the pipe. Pipe shall also have the following agency listing of NSF 61.

B. 4 Inches and Larger - Pipe shall be manufactured from a PE 3408 resin listed with the Plastic Pipe Institute (PPI) as TR-4. The resin material will meet the specifications of ASTM D3350 with a cell classification of PE:345464C. Pipe shall have a manufacturing standard of ASTM F714. Pipe O.D. size shall be ductile iron pipe size (DIPS). Pipe shall be pressure class as indicated on the plans. The pipe shall contain no recycled compounds except that generated in the manufacturer's own plant from resin of the same specification from the same raw material. All pipes shall be suitable for use as pressure conduits, listed as NSF 61, and per AWWA C906. Pipe shall have a nominal burst value of three and one-half times the Working Pressure Rating (WPR) of the pipe. Peak flow water velocity of 5 ft/sec shall be used in the hydraulics engineering design.

C. Polyethylene Pipe Fittings

1. Fittings for polyethylene pipe shall be manufactured specifically for the intended use and be approved by the piping manufacturer to be compatible with their product. All fittings shall have a working pressure rating equal to or greater than the pipe, and shall meet all requirements of NSF 61.

2. Butt Fusion Fittings

a. Fittings shall be PE3408 HDPE, Cell Classification of 345464C as determined by ASTM D3350-02, and approved for AWWA use. Butt Fusion Fittings shall have a manufacturing standard of ASTM D3261. Molded & fabricated fittings shall have a pressure rating equal to the pipe unless otherwise specified in the plans. Fabricated fittings are to be manufactured using Data Loggers. Temperature, fusion pressure and a graphic representation of the fusion cycle shall be part of the quality control records. All fittings shall be suitable for use as pressure conduits, and per AWWA C906, shall have a nominal burst values of three and one-half times the Working Pressure Rating (WPR).

3. Electrofusion Fittings

a. Fittings shall be PE3408 HDPE, Cell Classification of 345464C as determined by ASTM D3350-02. Electrofusion Fittings shall have a manufacturing standard of ASTM F1055. Fittings shall have a pressure rating equal to the pipe. All electrofusion fittings shall be suitable for use as pressure conduits, and per AWWA C906, have nominal burst values of three and one-half times the Working Pressure Rating (WPR).

b. Flanged and Mechanical Joint Adapters - Flanged and Mechanical Joint Adapters shall be PE 3408 HDPE, Cell Classification of 345464C as determined by ASTM D3350-02. Flanged and Mechanical Joint Adapters shall have a manufacturing standard of ASTM D3261.

4. Adapters

a. When changing from or to HDPE pipe adapter as manufactured by the pipe manufacturer shall be used.

2.4 STAINLESS STEEL PIPING

A. 2" and Smaller Pipe

1. All stainless steel pipe 2" and smaller shall be threaded schedule 40 type 304L or type 316L where indicated on the plans.

2. Fittings 2" and smaller shall be 150 lb threaded fittings compatible with schedule 40 threaded pipe and of the same material as the pipe.

3. Finish: Standard finish for piping and fittings shall be No.2 Mill finish or better. All pipe fittings and fabrications shall be identified and marked with type and gauge.

B. 2-1/2 and Larger Pipe

1. All stainless steel pipe shall be the schedule and material as indicated on the drawings.

2. All fittings and flanges shall be welded.

C. Flanges

1. All flanges shall be 150 lb compatible unless indicated otherwise.
2. Flanges on schedule 40 pipe shall be slip-on or weld neck flanges as indicated on the drawings. Slip on flanges shall be fully welded on the exterior and interior.
3. Flanges for schedule 10 pipe shall be Vanstone type flanges with ductile iron or stainless steel backing rings as indicated on the drawings.
4. All Flange bolts and nuts shall be stainless steel to match the material of the pipe.

D. Welding

1. All pipe welds shall be done with acceptable industry standard practices by ASME qualified welders and ASME procedures to provide full penetration. All interior and exterior surfaces shall be smooth, even and uniform.

2. Welder certification shall be submitted for approval before any pipe welding takes place.

2.5 COPPER TUBING

A. Copper tubing shall conform to ASTM B88. Copper tubing for exterior use shall be type K. For interior use, the copper tubing shall be type L.

B. Fittings: Fittings for underground service shall be flared fittings of brass for flared copper tubes and conforming to ANSI B16.26. Fittings for interior use shall be wrought copper and bronze solder-joint fittings conforming to ANSI B16.22. Solder for jointing

shall be 95/5 tin/antimony or brazing alloys with melting temperatures above 1,000 degrees F. Flux shall be as specified by the solder manufacturer.

2.6 GALVANIZED STEEL PIPE AND FITTINGS

A. Pipe

1. Galvanized pipe shall be schedule 40 A53 Continuous Welded, Type F, Grade A, Black, Passivate, Bare, Pickled and Oiled, hot-dipped Galvanized, UL Listed; FM approved: NSF61 certified, Suitable for welding and/or, threading, Grooving and Bending, produced to ASTM A53A 53M, Federal Specification WW-P404 and ASME B36.10M.

2. Tensile Requirements

a. Tensile Strength, min. 48,000 psi
b. Yield Strength, min. 30,000 psi

B. Fittings

1. All fittings shall be 150 lb malleable iron galvanized fittings.

C. Unions

1. Unions 2½ and smaller shall be galvanized 150 lb. bronze to iron seat unions.

2.7 INSTRUMENT AND CONTROL PIPING

A. General: All labor, materials, equipment, tools and services required for the furnishing and the installation of instrument and control piping required in this contract and shall be furnished and installed in compliance with the following requirements.

B. General Instrument and Control Piping

1. Piping shall be furnished and installed as per the materials and in the sizes, grades and locations indicated on the plans and/or designated in the specifications. The Contractor shall be responsible for the adequacy of all piping supports and anchors and shall provide necessary clearances and flexibility so that the piping and equipment is not subject to undue stresses either during erection or operation.

2. Shop drawings showing sizes, materials, fittings, supports, anchors and hanger details, shall be submitted to the Engineer for approval prior to fabrication or installation of the piping.

3. The word "piping" in this paragraph of the specification is in reference to the instrument tubing.

C. Materials: All materials incorporated in the final work shall comply with the latest issue of the following specifications, but in all cases instrument tubing shall be furnished in accordance with ANSI B31.1, Code for Pressure Piping.

1. Copper Tubing

Copper tubing, type DHP	ASTM B68 and B75
Copper pipe, seamless tubing	ASTM B75
Copper pipe, solder-joint fittings	ANSI B16.22
Copper bronze solder-joint fittings for copper pipe	ANSI B16.1

2. Steel Tubing

Steel tubing	ASTM A17
Seamless steel tubing	SAE 1030

3. Aluminum Tubing

Drawn seamless tubes	ASTM B210

4. PVC Piping

Pipe and fittings shall be as specified above.

5. CPVC Piping

Pipe and fittings shall be as specified above.

6. Stainless Steel Tubing

a. Stainless steel tubing and fittings shall be 304L or 316L as indicated on the plans with compression fittings of the same material manufactured by Parker, Hannifin or approved equal.

2.8 COUPLINGS AND ADAPTERS

A. All sleeve type couplings for underground pipe shall be mechanical joint couplings in accordance with AWWA C110/A21.10, ANSI/AWWA C111/A21.11.

B. All above ground couplings shall be dresser style 38 or approved equal with restraining rods.

C. All flanged adapters shall be ROMAC flanged coupling adaptors model RFCA (Restrained Flanged coupling adapter) or approved equal. Uniflanges (zip flanges) are not allowed.

2.9 TAPPING SLEEVES AND SADDLES

A. All taps shall be made on fitting bosses or on pipe with tapping saddles. No taps shall be made directly in pipe. Fittings shall only be tapped on fitting bosses.

B. Tapping sleeves shall be used on all taps greater than 2". Tapping sleeves shall be mechanical joint ductile iron type with 125-lb. ANSI standard outlet flange or type 316 stainless steel sleeve type, rated 150 psi minimum. Tapping saddles shall be used on all taps 2" and smaller and shall be banded type, with two (2) 304 stainless steel bands, suitable for bolting in place on the pipe to be tapped. Tapping saddles shall include a corporation stop for underground service and tapped for NPT when used above ground and in exposed areas such as vaults and wet wells. Sleeves shall meet all the requirements of ASNI/AWWA C110/A21.10 and C111/A21.1.

C. Sleeves shall meet all the requirements of ASNI/AWWA C110/A21.10 and C111/A21.1. Tapping sleeves shall have a full circumferential gasket. For tapping sleeves with an outlet diameter greater than 12", the sleeve shall have an outlet seal gasket. Lubricate pipe and face of gasket with water or soap-water. The Contractor shall not use petroleum based products such as grease or pipe lubricant.

PART 3- EXECUTION

3.1 GENERAL

A. In shipping, delivering, storing and installing, pipe and accessories shall be kept in a sound, undamaged condition. Pipe coating shall not be injured, and no other pipe or material shall be placed inside a pipe or fitting after the coating has been applied.

B. All pipe between structures and terminus shall be of the same size and material and shall be furnished by the same manufacturer. Each pipe length and all fittings shall be clearly marked at intervals of five feet or less with the manufacturer's name or trademark and pipe type or strength.

3.2 EXPOSED PIPING WITHIN BUILDINGS AND STRUCTURES

A. Piping systems installed within the buildings and structures shall be installed essentially where and as shown on the drawings, with ample clearances and allowances for expansion or contraction; operation of all doors and windows; mechanical equipment, etc.; without blocking aisle space; and installed with provision for the weight of the pipe and contents; shall be supported at proper intervals to assure uniform alignment and all other conditions encountered; including, provisions for support connections to the structural members. These support connections are to be so applied as to relieve all structural members of undue stress or strain.

B. It is the intent of this specification that all piping be installed "gas" and "water" tight. Any and all joints otherwise shall be repaired and faulty materials shall be removed from the project site. Test pressures shall be applied by the use of a pump or other suitable device. Pressure shall be maintained for such a time as required to permit the Owner or his representative to complete the inspection of all pipe under test and mark the location of defective joints or other items for further correction. Testing shall be as specified elsewhere in this section.

C. The Contractor shall be responsible for the location and size of any and all sleeves or openings required for the piping systems. He shall arrange for all chases, recesses, inserts or anchors, at proper times and at the proper elevation and location in the building construction. The failure to provide this information shall require that he pay for any and

all costs incurred for these corrections. He shall arrange his work with all others engaged on the project, to maintain the proper relationship of this work with the work of all others.

3.3 CONNECTIONS TO EQUIPMENT

A. All connections to equipment shall be with flanges. Equipment with NPT connections shall have a flange installed with a NPT nipple.

3.4 UNDERGROUND PIPING OUTSIDE BUILDINGS AND STRUCTURES

A. Systems installed outside the buildings and structures shall be installed essentially where and as shown on the drawings, with ample clearance and allowances for expansion or contraction; operation of all doors and windows; mechanical equipment, etc. It is the intent of this specification that all piping be installed "gas" and "water" tight. Testing shall be done as herein specified in this section.

B. Handling Pipe: Pipe, fittings and accessories shall be handled in such a manner as to ensure that sound, undamaged pipe entirely suitable in all respects to the specific requirements of each particular fitting, pipe and accessory is provided and installed. Particular care shall be taken not to injure either the coating, the pipe, or threads. Equipment, tools and methods used in loading, reloading, unloading, hauling and laying pipe and fittings shall be such that no damage is done thereto or the coatings thereon. Where hooks are used for lifting, they shall have broad well-padded contact surfaces and shall be of such design and length that they will provide uniform support for a distance back from the end of the pipe not less than one-half of the internal pipe diameter. Defective or damaged coatings or linings may be repaired, if properly done, by and at the expense of this Contractor, who may employ the pipe manufacturer to make such repairs, but in any case, all such field repairs shall be made under the direct supervision of a representative of the pipe manufacturer. No field repair work may be done on any damage, including pipe coating or lining, without prior approval of the Owner's Representative.

C. Cutting, Cleaning, and Inspecting Pipe: The cutting of pipe for closure pieces or for other reasons shall be done in a neat and workmanlike manner by a method which will not damage the pipe. Unless otherwise approved by the Owner's Representative, all cutting of such pipe shall be done by means of mechanical cutter of an approved type. Wheel cutters shall be used wherever practical. After cutting, the interior of the pipe shall be thoroughly swabbed or cleaned of all foreign matter and shall be kept clean during and after installation.

D. Ductile iron pipe shall be cut with an electric or gas powered cutoff wheel.

E. Piping shall be laid to the elevation shown on the plans. Piping without specific elevations that conflicts with other piping that has specific elevations shown on the plans shall be varied in depth or necessary fittings shall be used to avoid the piping with specific elevations shown on the drawings.

F. Water pipe shall be laid to the line and grade shown on the Drawings with all valves and hydrants located as shown on the Drawings.

G. Protection shall be afforded to all underground and surface structures using methods acceptable to the Owner's Representative. This protection shall be furnished by the Contractor at the Contractor's own expense.

H. Subsurface explorations shall be made by the Contractor at the direction of the Owner's Representative where it is necessary to determine the location of existing pipes, valves or other underground structures.

I. When the pipe is assembled at the trench surface, proper support of the pipe using backhoes, cranes, rope, band slings, etc. shall be provided where the pipe is snaked from the trench bottom to trench surface. The Contractor shall not roll the pipe into the trench.

J. After the foundation has been properly graded, bedded when applicable, and the bell holes dug, the pipe and accessories shall be carefully lowered into the trench by approved methods. Under no circumstances shall the pipe or accessories be dropped or dumped into the trench. All damaged pipe and accessories shall be properly repaired or removed from the job. Damaged pipe shall be replaced at the expense of the Contractor.

K. Pipe shall be swabbed clean before it is laid, and any pipe which cannot be cleaned with a swab shall be removed and cleaned with suitable apparatus. Any pipe showing evidence of oil, tar or grease shall be permanently marked and removed from the job. This pipe shall not again be brought on the job site until it has been cleaned to the satisfaction of the Owner's Representative.

L. Connections to existing facilities shall be made where shown on the plans or directed by the Owner's Representative. All connections shall be witnessed by the Owner's Representative. Wet taps, using tapping sleeves and valves, shall generally be made; except as otherwise directed or planned in which case the main shall be cut and the connections made with fittings and valves. In no case shall the Contractor shut off the water or operate the fire hydrants or gate valves in the existing systems without the expressed permission of the Owner. In event such instructions or permissions given by the Owner delays the cutoff, such instructions shall be followed without recourse.

M. In making connections to the existing pipe valves shall be set as shown on the Plans, or at such designated places as the Owner's Representative may direct. If due to unforeseen conditions, these locations have to be changed or additional valves or fittings added, the Contractor shall install the valves or fittings at the new locations.

N. Install yard hydrants as indicated on the Drawings. Yard hydrants shall be set plumb with the nozzle facing away from structure. Finish grade surrounding the hydrant shall be generally flat and clear for a distance of 3 feet surrounding the hydrant. Hydrants shall be field tested upon completion of installation.

3.5 INSTALLATION OF PIPING SYSTEMS

A. Equipment Pipe Connections - Care shall be taken in bolting flanged joints, so that there is no restraint on the opposite end of the pipe or the fitting which would prevent uniform gasket pressure at the connection or would cause unnecessary stresses in the equipment flange. Bolts shall be tightened gradually at a uniform rate and in a program that will result in uniform gasket compression over the entire area of the joint. Special care shall be taken when attaching suction and discharge piping to pumping equipment so that no

stresses are transmitted to or imposed on the pump. All pumping connection to pumps or other equipment shall be so installed and so supported that accurate matching of the bolt holes and uniform contact over the entire area of abutting pump or equipment flange and connecting pipe line flange is obtained prior to the installation of any bolt in any flange. In addition, the pump connecting or equipment piping shall be free to move in all directions parallel to its longitudinal centerline when and while the bolts in the pump connection flange are tightened. Pumps or equipment shall not be grouted prior to the initial fitting and alignment of the pipes connected thereto. They shall, however, in each case be level, aligned and wedged in place in position. The pumps or equipment shall be grouted prior to the final bolting of the connecting piping in accordance with the provision of this paragraph. To provide the maximum flexibility and ease of alignment, the pump or equipment connecting piping shall be assembled with the gaskets in place with only a portion of the flange bolts, not less than four per joint, installed. After aligning and bolting, the pump or equipment connection shall be tested by loosening the flange bolts, if the piping is properly installed, there should be no change in the relationship of the piping flange to the pump or equipment connecting flange.

B. Lining Up Bell and Spigot Pipe - Pipe lines or runs intended to be straight shall be so laid. Deflections from a straight line or grade, made necessary by vertical curves or horizontal curves or offsets, shall not exceed that recommended by the manufacturer of the pipe or approved by the Engineer. If the specified or required alignment requires deflections in excess of those stipulated above, the Contractor shall provide either special bends as approved by the Engineer, or pipes in shorter lengths in such length and number that the annular deflections at any joint, as required by the specified maximum deflections, are not exceeded.

C. Laying Pipe in Trench - Each pipe length, having been properly cleaned and tested, shall be laid on the previously graded trench bottom after the bell hole has been dug; after proper joint cleaning, the joint gasket or rubber ring, if used, shall be placed in the pipe bell. Lubrication as recommended by the pipe manufacturer shall be used on the gasket and spigot end as the pipe in pushed together.

D. Where conditions are, in the opinion of the Owner's Representative, unsuitable for laying pipe because of weather or trench conditions, the Contractor shall be required to cease work until permission is given by the Owner's Representative for work to commence again providing such conditions have been corrected.

1. Only proper and suitable tools and appliances for the safe and convenient handling and laying of pipes and fittings shall be used. Pipe, fittings, and valves shall be carefully handled and lowered into the trench. Under no circumstances shall any pipe or fittings be dumped or rolled into trench or be allowed to drop against the pipe or fitting already in the trench. Great care shall be taken to prevent the pipe lining and coating from being damaged, and any lining or coating damaged in any way shall be repaired by the Contractor to the satisfaction of the Engineer. Before being lowered and while suspended, the pipe shall be inspected for defects and ductile iron pipe rung with a light hammer to detect cracks. Defective, damaged or unsound pipe will be rejected.

2. The interior of the pipe shall be thoroughly cleaned of all foreign matter before being lowered into the trench and shall be kept clean during laying operations by means of plugs or other approved methods. The pipe shall not be laid in water or

when the trench or weather conditions are unsuitable for such work. When work is not in progress, open ends of pipe and fittings shall be closed securely so that no trench water, earth, or other substances will enter the pipe or fittings.

3. The full length of each section of underground pipe shall rest solidly upon the pipe bed, and any defects due to settlement shall be made good by the Contractor at his own expense. The ends of pipe shall abut against each other in such manner that there shall be no shoulder or unevenness on the inside of the main. Bell holes shall be dug sufficiently large to ensure the making of proper joints. Special precautions shall be exercised to prevent any pipe from resting on rock.

4. Any pipe that has the grade or joint disturbed after laying shall be taken up and relaid. Any pipe, pipe fittings, or appurtenance found defective after installation shall be replaced without additional expense to the Owner.

5. Except where otherwise necessary in making connections or closures, or as authorized by the Engineer, bell-and-spigot pipe shall be laid with spigot facing in the direction of flow.

E. Where pipe cutting is necessary, it shall be done in a neat and workmanlike manner without damage to the pipe. Unless otherwise authorized, cutting shall be done by means of an approved type of mechanical cutter which will leave a smooth end at right angles to the axis of the pipe and not otherwise damage the pipe or lining. Wheel cutters shall be used when practicable.

Jointing

1. Mechanical joints and push-on joints on ductile iron and PVC pipe and fittings shall be made in accordance with the recommendations of the joint manufacturer, as approved.

2. Permissible Deflection at Joints

   a. No spring of joints to effect a change in direction will be allowed except by permission or direction or as shown on the drawings.
   b. Wherever it is necessary to deflect pipe from a straight line, either in the vertical or horizontal plane, the amount of deflection shall not exceed ½ of that recommended by the pipe or joint manufacturer.
   c. If the required alignment necessitates greater deflections, special bends approved by the Engineer or shorter lengths of pipe to provide angular deflections within acceptable limits shall be furnished.

3. Pipe excavation shall be kept free from water and no joint shall be made under water. The Contractor shall be careful during backfilling to prevent damage to or disturbing of joints and to protect the watertight integrity of the pipes at all times. There shall be no walking on or working over pipe until backfill is over pipe. Backfilling shall be commenced by depositing and tamping earth layers not more than 4 inches thick around and over the pipe to a point not less than 1 foot in depth over the top, after which backfilling of the remainder of the trench may proceed.

4. Sheeting and shoring shall be in accordance with construction methods established in the Associated General Contractors of America Safety Code. The Contractor shall follow this AGC Manual in determining whether or not sheeting and shoring is required and shall follow the AGC recommended procedure for installation.

5. Thrust Blocks

   a. Plugs, caps, tees, and bends, vertically or horizontally, on force main shall be provided with thrust blocking where indicated on the plans.
   b. Thrust blocking shall be concrete, minimum 3,000 psi.
   c. Unless otherwise indicated or directed, the base and thrust bearing sides of thrust blocks shall be poured directly against undisturbed earth. The sides of thrust blocks not subject to thrust may be poured against forms. The area of bearing shall be as shown on the drawings or directed by the Engineer.
   d. Blocking shall be placed so that the fitting joints will be accessible for repair.

3.6 FABRICATION AND INSTALLATION:

A. All piping shall be fabricated and installed by skilled and qualified craftsmen in accordance with specified methods, manufacturer's recommendations, and standard practices. Workmen shall be provided with suitable tools and appliances, adequate scaffolding, and protective devices.

1. Flared ends and threaded ends shall be protected. Great care shall be taken during handling and erection to prevent damages to these parts. Should any part become damaged, it shall not be used and the end shall be cut off, making sure that the tube is cut square across the end to allow the end to be joined properly.

2. Piping shall not obstruct openings, passageways, hoist, and dismantling spaces.

3. Piping connected to equipment shall be supported completely independent of the equipment. Pipe supports shall be installed as specified herein. Piping passing through walls and floors shall be installed in sleeves.

B. Screwed Joints: Pipe threads shall be cut and conform to USAS B21. Pipe shall be accurately cut to length and reamed to full diameter. Joints shall be made with an approved joint compound applied to the male threads only. Valves and fittings shall be made up with care to ensure that there is no distortion or damage to these parts.

C. Flared Tubing and Fittings

1. Aluminum and Copper Tubing: Aluminum and copper tubing shall have SAE 45 degree flare. Fittings shall be of two piece construction and shall be either extruded from solid brass parts or parts machined from solid brass.

2. Aluminum and Copper Tubing (200 psig and below): The application of a compression type joint with a compressing ring may be used.

3. Aluminum and Copper Tubing (above 200 psig): Fittings shall have an inverted flare. In limited space application and in all other cases, standard long nut shall be used as the union connection.

4. Steel Tubing and Fittings: Steel tubing and fittings shall be fabricated to SAE 37 degree flare as recommended by the joint industry conference, hydraulic standards, for industrial equipment.

5. Steel Tubing (150 psig and below): Fittings shall be of the 3-piece type, the nut, body and the additional sleeve, retained by the shoulder of the nut.

6. Steel Tubing (above 150 psig): Fittings shall be of the 2-piece type, the nut and body only.

D. Welded Joints

1. Welded joints shall be in strict accordance with the provisions of the ASME Boiler Code and/or ANSI B31.1, Code for Pressure Piping. The Engineer shall approve Contractor's welding procedures and workmen's credentials before welding is performed under this contract. The Engineer shall have the right at anytime to call for and witness welding tests or designate samples to be taken and tested from joints already welded. All materials, labor, tests and repairs to work shall be at the Contractor's expense.

E. CPVC and PVC pipe

1. When CPVC or PVC pipe is attached to metal pipe or equipment, the transition shall be with a male CPVC or PVC thread into a female metal thread. CPVC or PVC shall never be installed over the metal thread.

F. Tapping Procedure

1. Tapping Preparations

a. Adequate access for mounting the tapping sleeve and the tapping machine must be provided. The pipe must be uncovered if buried. The pipe shall be cleaned thoroughly prior to mounting the tapping sleeve. Loose particles, dust, sand, grease, etc. shall be removed. Normally, no further surface preparation is necessary.

b. The pipe surface shall be inspected for damage in the area underneath and adjacent to the tapping sleeve after cleaning. No damage to the pipe is acceptable in this area.

2. Existing Force Main Shall be Hot Tapped

a. For hot tapping, a specialized tapping machine is always required. In addition to the tapping sleeve and machine, the assembly consists of a branch valve (gate or ball) and the cutting device. The pressure rating of the branch valve and the tapping equipment shall be at least equal to the pressure rating of the pipeline.

b. The tapping sleeve shall be located and oriented according to the plans and/or drawing.

c. Mount the tapping sleeve on the pipe. The installation instructions issued by the tapping sleeve manufacturer for the tapping sleeve shall be used.

d. Mount the valve on the tapping sleeve. Follow the instructions for the valve or flange assembly with respect to bolt torque, seal type, etc.

e. Pressure test to verify sealing of tapping sleeve and valve is recommended prior to tapping. It should be noted that a test with overpressure between sleeve and pipe is more demanding on the rubber seal than a pressure test of the tapped pipe.

   1) If the tapping sleeve is equipped with a test plug, this test can be conducted with the branch valve closed. Otherwise a blind flange with test plug can be mounted on the valve and the test conducted with open valve. Some tapping machines are equipped with a test plug rendering the blind flange superfluous.

   2) Fill the space between the pipe and the tapping sleeve with water, evacuate entrapped air and pressurize to test the integrity of the seals between the sleeve and the pipe and between the sleeve and the valve. The test pressure need not exceed the actual internal pressure of the pipe to be tapped by more than 3 bars. (If a leak occurs, dismount and inspect for dirt or damage. Do not increase the bolt torque on the sleeve). – The test pressure shall also neither exceed the maximum test pressure rating of the tapping sleeve nor the pipe.

f. Mount the tapping machine on the valve. Follow the instructions for the tapping machine or flange assembly with respect to bolt torque, seal type, etc.

g. Make sure that the valve is open and perform the cutting operation.

   1) Cutting tools suitable for cutting of GRP pipe shall be used for cutting the tapping holes. The cutting tools must give a clean cut without tearing or breaking the pipe wall. This is especially important when the cutting device penetrates the inner surface of the GRP pipe to avoid peeling.

      a) A special diamond cutting device for glass fiber laminates is recommended. A closely spaced thin-walled fine tooth steel cutting device may also be used; however, this type of device tends to wear out fast.

      b) Advancement rate of the cutter during drilling must be limited to avoid damage and peeling of the inner surface. A test cut on a pipe wall sample is recommended for operators and tools not previously exposed to GRP pipes.

      c) The cut surface may be left as it is after cutting without further surface penetrations.

h. After cutting, the cutting device with the coupon is retrieved through the valve. The tapping machine with the cutting tool along with the pipe coupon can be removed once the valve is closed.

i. Inspection and hydrostatic test of the assembly can be performed upon completion of installation.

3. Tapping Inspection and Testing

a. Checking, hydrostatic testing, and inspection of the installed pipe assembly shall be performed according to GRP installation instructions.

b. For inspection, the following shall be observed:

1) The tapping sleeve shall not be bulged, deformed, or otherwise damaged.

2) Proper support and thrust restraint is provided.

c. Hydrostatic testing of the sleeve assembly should performed after installation according to GRP installation instructions.

d. The test pressure shall not exceed the lowest of the following:

1) 1.5 times the design pressure or pressure rating of the pipeline system as defined in GRP installation instructions, or

2) Maximum test pressure for the sleeve system as defined for the tapping sleeve.

3.7 TESTING

A. Refer to DIVISION 2 for Testing and Disinfection requirements.

END OF SECTION

SECTION 11110
FLOW MEASUREMENT

PART 1- GENERAL

1.1 SCOPE

A. The Contractor shall furnish, install, and place into satisfactory operation flow meters as indicated on the plans and specified herein.

B. These specifications set forth the minimum acceptable design criteria and performance requirements for turbine-type cold water meters

1.2 SUBMITTALS

A. Submittals shall be in accordance with Division 1.

1.3 Operation and Maintenance Data

A. Operation and Maintenance Data shall be in accordance with Division 1.

1.4 WARRANTY

A. Warranty shall be in accordance with Division 1.

PART 2- PRODUCTS

2.1 TURBINE TYPE COLD WATER FLOW METER

A. The meter package shall meet or exceed all requirements of ANSI/AWWA Standard C701 for Class II turbine meter assemblies. Each meter assembly shall be performance tested to ensure compliance. The meter package shall meet or exceed all requirements of NSF/ANSI Standard 61, Annex F and G.

B. Maincases

1. The meter maincase shall be of epoxy coated ductile iron composition. The epoxy coating shall be provided as standard fusion-bonded and adhere to NSF for non-lead regulation compliance.

C. Performance

1. The meter assembly shall have performance capability of continuous operation up to the rated maximum flows as listed below without affecting long-term accuracy or causing any undue component wear. The meter assembly shall also provide a 25% flow capacity in excess of the maximum flows listed for intermittent flow demands. Maximum headloss through the meter/strainer assembly shall not exceed those listed in the following table per meter size.

D. Measuring Chamber

1. The measuring chamber shall consist of a measuring element, removable housing, and all-electronic register. The measuring element shall be mounted on a horizontal, stationary stainless steel shaft with sleeve bearings and be essentially weightless in water. The measuring element comes integrated with the advanced Floating Ball Technology design. The measuring chamber shall be capable of operating within the above listed accuracy limits without calibration when transferred from one maincase to another of the same size. The measuring shall be so configured to capture all flows as specified above.

E. Operating Characteristics:

Meter Size	Low Flow (95% Min.)	Operating Range (98.5 - 101.5%)	Intermittent Flows (98.5 - 101.5%)	Pressure Loss (Not to Exceed)
1-1/2"	0.75 GPM	1.25 to 160 GPM	200 GPM	6.9 PSI @ 160 GPM
2"	1.0 GPM	1.5 to 200 GPM	250 GPM	7.0 PSI @ 200 GPM
3"	1.5 GPM	2.5 to 500 GPM	650 GPM	5.1 PSI @ 500 GPM
4"	2.0 GPM	3.0 to 1000 GPM	1250 GPM	8.7 PSI @ 1000 GPM
6"	2.5 GPM	4.0 to 2000 GPM	2500 GPM	8.2 PSI @ 2000 GPM
8"	4 GPM	5 to 3500 GPM	4700 GPM	5.1 PSI @ 3500 GPM
10"	5 GPM	6 to 5500 GPM	7000 GPM	7.2 PSI @ 5500 GPM

F. Direct Magnetic Drive System

1. The direct magnetic drive shall occur between the motion of the measuring element blade position and the electronic register. The OMNI direct drive system with Floating Ball Technology is designed to extend service life, enhance low flow sensitivity and provide extended flow capacity and overall accuracy of the meter assembly. Any and all additional intermediate, magnetic or mechanical, drive couplings are not acceptable.

G. Electronic Register

1. The meter's register is all-electronic and does not contain any mechanical gearing to display flow and accurate totalization. The electronic register includes the following partial list of features:

    1. AMR resolution units fully programmable
    2. Pulse output frequency fully programmable
    3. Integral data logging capability
    4. Integral resettable accuracy testing feature
    5. Large, easy-to-read LCD display
    6. 10-year battery life guarantee
    7. Provide analog 4-20 mA signal to local PLC

H. Maximum Operating Pressure

1. The meter assembly shall operate properly without leakage, damage, or malfunction up to a maximum working pressure of 200 pounds per square inch (psig).

I. Strainer

1. The meter strainer shall be integral and cast as part of the meter's maincase. The strainer's screen shall have a minimum net open area of at least two (2) times the pipe opening and be a V-shaped configuration for the purpose of maintaining a full unobstructed flow pattern. The strainer body shall be a coated ductile iron fusion-bonded epoxy identical to that of the meter's maincase. All fasteners shall be stainless steel capable of maintaining the following static pressure ratings and physical dimensions:

Meter Size	Maximum Operating Pressure	Overall Length (Not to Exceed)
1-1/2"	200 PSIG	13"
2"	200 PSIG	17"
3"	200 PSIG	19"
4"	200 PSIG	23"
6"	200 PSIG	27"
8"	200 PSIG	30-1/8"
10"	200 PSIG	41-1/8"

J. Straightening Vane

1. A straightening vane assembly is mandatory and shall be positioned directly upstream of the measuring element. The straightening vane assembly shall be an integral component of the measuring chamber.

K. Connections

1. Flanges for the 1-1/2" and 2" size meter assemblies shall be of the 2-bolt oval flange configuration. The 3", 4", 6", 8" and 10" size meter assemblies shall have flanges of the Class 125 round type, flat faced and shall conform to ANSI B16.1 for specified diameter, drilling and thickness.

L. All sizes of meter packages shall display the sizes, model, manufacturer name, and direction of flow. Such display shall be cast on the side of the meter maincase.

M. Meters shall be guaranteed against defects in material and workmanship for a period of one (1) year from date of shipment. In addition, the meter supplier shall submit nationally published literature clearly outlining its factory maintenance program and current price schedule covering complete measuring chamber exchange.

N. Transmitter

1. Transmitter shall be supplied by the flow meter manufacturer and shall come with 50-ft sensor cable to connect the flow meter and transmitter.
2. Transmitter shall accept pulses or contact closures from the metering device and provide output displaying rate of flow data and totalization of flow.
3. Transmitter shall be capable of sending 4-20 mA signals to local PLC.
4. Enclosure shall be NEMA 4X SS mounted as indicated on the drawings.

O. Manufacturer

1. The flow meter and strainer shall be the Sensus OMNI Turbo T2 or approved equal.
2. The transmitter shall be the Sensus ACT-PAK Model 100DN.

PART 3- EXECUTION

3.1 FIELD SERVICE

A. Field Service shall be in accordance with Division 1.

3.2 STARTUP

A. Startup shall be in accordance with Division 1.

3.3 TRAINING

A. Training shall be in accordance with Division 1.

END OF SECTION

SECTION 11150
VALVES, HYDRANTS, AND APPURTENANCES

PART 1- GENERAL

1.1 SCOPE

A. The Contractor shall furnish all equipment, labor, materials, and appurtenances required to accomplish the work specified herein.

1.2 DESCRIPTION

A. This section of the Specifications defines the class, type, pressure rating and materials that will be required for various valves, and appurtenances used. Reference is made to Division 15, "Mechanical", regarding end types, materials, class, etc., of the various piping systems. The Contractor shall furnish, install, insulate where required, paint, test, and adjust all valves, hydrants and other miscellaneous equipment, including all auxiliary equipment and devices such as handwheels, operating stands, position indicators, valve tags, valve boxes, extension stems, stem guides, chain wheels, chain and chain hooks, gasketing, and accessories and appurtenances as shown on the Drawings, specified or required for a complete installation.

1.3 SUBMITTALS

A. Submittals shall be in accordance with Division 1.

B. All products included in this section require a submittal.

1.4 OPERATION AND MAINTENANCE DATA

A. Operation and Maintenance Data shall be in accordance with Division 1.

1.5 WARRANTY

A. Warranty shall be in accordance with Division 1.

B. Any such defects, which occur within the stipulated guaranty period, shall be repaired, replaced, or made good at no cost to the Owner.

1.6 RELATED DOCUMENTS

A. Drawings and general provisions of the Contract, including General Conditions and Supplemental General Conditions and Division 1 Specifications Sections apply to this Section.

B. Operation and maintenance manuals shall be provided by manufacturer at least two weeks prior to shipment of major equipment components. Each manual shall be a bound, indexed binder with drawings and parts lists prepared specifically for this project rather than general instructions that are not designed for this project.

1.7 QUALITY ASSURANCE

A. Qualifications

1. Manufacturer's Qualifications:

a. The equipment manufacturer shall modify their standard equipment to meet the minimum values specified for dimensions, design, and the intent of this specification.

b. Manufacturers regularly engaged in the manufacture of the equipment as specified herein and who can demonstrate equipment of this specified design, in actual service for a period of not less than 10 years will be considered as acceptable manufacturers.

c.

d. Manufacturers shall show evidence of quality assurance in manufacturing and supplying equipment essential in details to the equipment herein specified.

2. Component Supply and Compatibility:

a. Obtain all equipment included in this Section, regardless of the component manufacturer, from the equipment supplier for sole source responsibility.

b. The equipment supplier to review and approve or prepare all Shop Drawings and other submittals for all components furnished under this Section.

1.8 DELIVERY, STORAGE, AND HANDLING

A. Packing, Shipping, Handling, and Unloading

1. Deliver materials to the Site to ensure uninterrupted progress of the Work. Deliver anchor bolts and anchorage devices, which are to be embedded in cast-in-place concrete in ample time to prevent delay of that Work.

B. Acceptance at Site

1. All boxes, crates, and packages shall be inspected by Contractor upon delivery to the Site. Contractor shall notify Engineer, in writing, if any loss or damage exists to equipment or components. Replace loss and repair damage to new condition in accordance with manufacturer's instructions.

C. Storage and Protection

1. Store materials to permit easy access for inspection and identification. Keep all material off the ground, using pallets, platforms, or other supports. Protect steel members and packaged materials from corrosion and deterioration.

2. Store all equipment in covered storage off the ground and prevent condensation and in accordance with the manufacturer's recommendations for long-term storage

PART 2- PRODUCTS

2.1 GATE VALVES

A. Gate valves, 3-1/2 inches and smaller, shall be rising stem, bronze body and bronze trim type. All parts shall be bronze except the handwheel and stem. The stuffing box gland shall be so arranged that the valve may be repacked under pressure.

B. Gate valves, 4 inches and larger, shall be rising stem, iron body, bronze mounted, resilient seats conforming to AWWA C500. Valve ends shall be as required for the piping in which they are installed. Valve ends shall be furnished according to the following specifications:

End Type Specification:

1. Screwed ANSI B 2.1
2. Flanged ANSI B 16.1, 125 psi
3. Mechanical Joint ANSI A 21.11

C. In general, interior gate valves shall have flanged ends, with handwheel and rising stem. Exterior valves shall have bell and spigot or mechanical joint ends with non-rising stem and valve box. The Contractor shall refer to the Drawings for all exceptions. Valve stems shall be manganese bronze with threads accurately cut to gauge. All valves shall have a clear waterway of full diameter of the valve. The handwheel or operating nut of each valve shall have an arrow cast on it showing the direction of opening. Where required, valves shall be equipped with gearing having a ratio of not less than 2 to 1. Gears and shafting shall be approved types and materials. Pinion shafts shall be bushed with bronze, composition A, and shall be provided with suitable oil holes. All gears shall be machine cut. Gate valves shall conform to the following ratings.

Size (inches)	Class	Working Hydrostatic Pressure PSI	Test Pressure PSI
2" and Larger	C	150	300

Class C gate valves shall be Golden Anderson, Crane Company, Mueller or approved equal.

D. Tapping valves shall be the same valves, subject to the standards, providing that tapping valves shall have the tapping ring.

E. All valves shall open left (counter clockwise)

2.2 SWING CHECK VALVES

A. SCOPE

1. This specification covers the design, manufacture, and testing of 2 inch through 48 inch Swing Check Valves suitable for cold working pressures up to 250 psig, in water, wastewater, abrasive, and slurry service.

2. The check valve shall be of the full flow body type, with a domed access cover and only two moving parts, the flexible disc and the disc accelerator.

B. STANDARDS AND APPROVALS

1. The valves shall be designed, manufactured, tested and certified to American Water Works Association Standard ANSI/AWWA C508.
2. The valves used in potable water service shall be certified to NSF/ANSI 61 Drinking Water System Components – Health Effects, and certified to be Lead-Free in accordance with NSF/ANSI 372.
3. Manufacturer shall have a quality management sys-tem that is certified to ISO 9001 by an accredited, certifying body.

C. CONNECTIONS

1. The Valves shall be provided with flanges in accordance with ANSI B16.1, Class 125.

D. DESIGN

1. The valve body shall be full flow equal to nominal pipe diameter at all points through the valve. The 4 in. valve shall be capable of passing a 3 in. solid. The seating surface shall be on a 45 degree angle to minimize disc travel. A threaded port with pipe plug shall be provided on the bottom of the valve to allow for field installation of a back- flow actuator or oil cushion device without special tools or removing the valve from the line.
2. The top access port shall be full size, allowing removal of the disc without removing the valve from the line. The access cover shall be domed in shape to provide flushing action over the disc for operating in lines containing high solids content. A threaded port with pipe plug shall be provided in the access cover to allow for field installation of a mechanical, disc position indicator.
3. The disc shall be of one-piece construction, precision molded with an integral O-ring type sealing surface and reinforced with alloy steel. The flex portion of the disc contains nylon reinforcement and shall be warranted for twenty-five years. Non-Slam closing characteristics shall be provided through a short 35 degree disc stroke and a disc accelerator to provide a cracking pressure of 0.3 psig.
4. The disc accelerator shall be of one piece construction and provide rapid closure of the valve in high head applications. The disc accelerator shall be enclosed within the valve and shall be field adjustable and replaceable without removal of the valve from the line. The disc accelerator shall be securely held in place captured between the cover and disc. It shall be formed with a large radius to allow smooth movement over the disc surface.
5. The valve disc shall be cycle tested 1,000,000 times in accordance with ANSI/AWWA C508 and show no signs of wear, cracking, or distortion to the valve disc or seat and shall remain drop tight at both high and low pressures.

E. MATERIALS

1. The valve body and cover shall be constructed of ASTM A536 Grade 65-45-12 ductile iron.
2. The disc shall be precision molded EPDM, ASTM D2000-BG.
3. The disc accelerator shall be Type 302 stainless steel.

F. ACCESSORIES

1. A screw-type backflow actuator shall be provided to allow opening of the valve during no-flow conditions. Buna-N seals shall be used to seal the stainless steel stem in a Lead-Free bronze bushing. The backflow device shall be of the rising-stem type to indicate position. A stainless steel T- handle shall be provided for ease of operation.
2. A mechanical indicator shall be provided to provide disc position indication on valves 3" and larger. The indicator shall have continuous contact with the disc under all operating conditions to assure accurate disc position indication.
3. A pre-wired limit switch will be provided to indicate open/closed position to a remote location. The mechanical type limit switch shall be activated by the mechanical indicator. The switch shall be rated for NEMA 4 and shall have U.L. rated 5 amp, 125 or 250 VAC contacts.
4. A welded nickel seat shall be provided for wastewater service applications.

G. LIMIT SWITCH

a. A mechanical indicator shall be installed to provide disc position indication on valves 3" and larger. The indicator shall have continuous contact with the disc under all operating conditions to assure accurate disc position indication.

b. A pre-wired limit switch shall be provided to indicate open/closed position to a remote location. The mechanical type limit switch shall be activated by the mechanical indicator. The switch shall be rated for NEMA 4, and shall have U.L. rated 5 amp, 125 or 250 VAC contacts.

c. The limit switch shall be installed by the valve manufacturer and shall be considered part of the valve and warrantied by the valve manufacturer.

H. MANUFACTURER

1. Manufacturer shall demonstrate a minimum of five (5) years´ experience in the manufacture of resilient, flexible disc check valves with hydraulic cushions.
2. All valves shall be hydrostatically tested and seat tested to demonstrate zero leakage. When requested, the manufacturer shall provide test certificates, dimensional drawings, parts list drawings, and operation and maintenance manuals.
3. The exterior and interior of the valve shall be coated with an NSF/ANSI 61 approved fusion bonded epoxy coating.
4. All miscellaneous metal components of the valve and appurtenances shall be 316 stainless steel.
5. Swing check valves shall be Series #7200 as manufactured by Val-Matic® Valve & Mfg. Corporation, Elmhurst, IL. USA, or approved equal.

2.3 OPERATING MECHANISMS, VALVE BOXES, ETC.

A. Valve boxes shall be of cast iron, three-piece screw type with covers and bases. They shall be of suitable size for the valve with which they are used and fully adjustable for depth of setting, extension pieces being furnished where necessary. Drop type covers shall be provided for each box with the proper word, "WATER" or "SEWER" designating the valve service cast into its top surface. Oval type bases shall be provided and shall be so designed to fully support the box without weight of the box and/or superimposed load being transmitted to any part of the valve or adjacent pipe on either side.

B. One foot-eight inch by one foot-eight inch by six inch deep (1' 8" x 1' 8" x 6") concrete collar or equivalent circular precast collar shall be installed around all valve boxes.

C. Wrenches of the various lengths needed shall be provided for operating valves with operating nuts. One wrench of suitable length for each three of such size operating nuts shall be provided.

2.4 PRESSURE GAUGES

A. Pressure gauges shall be Ashcroft Stainless Steel Type 1009 Duralife® pressure gauges, ASME B 40.1 Grade 1A (±1% of span) or approved equal. Gauge shall have a 4.5" face.

B. Pressure gauge shall be connected to a diaphragm seal
   1. Diaphragm seals shall be Ashcroft Type 201 threaded diaphragm seal or approved equal
   2. Diaphragm and housing material shall be 304 stainless steel
   3. Diaphragm seals shall have a minimum pressure rating of 150 psi

C. Pressure gauges shall be installed on the inlet and outlet riser pipe of the elevated storage tank

Location	**Range**
Inlet Riser	0-100 psi
Outlet Riser	0-100 psi

2.5 PRESSURE SWITCH

A. Pressure switches shall be Ashcroft B-Series Pressure Switch with NEMA 4X enclosure or approved equal.

B. Ranges shall be as follows:

Adjustable Operating Range	**Adjustable differential (psi)**
30inches Vacuum to 200 psi	2-25

2.6 PRESSURE GAUGE TRANSMITTER

A. Power Supply: Derived from fieldbus network
B. Signal Input: Process

C. Signal Output: 4-20mA

D. Process Connection:

1. Pressure Tap: 1/2-inch male NPT, 316Ti stainless steel

2. O-Ring Seal: O-ring seals shall be Viton unless otherwise indicated in the Instrument Index.

E. Product Requirements:

1. Pressure transmitter shall be capacitance type with a ceramic pressure sensing diaphragm. Span shall be adjustable over a 10:1 or greater range. Over range capacity without affecting calibration shall be not less than 800 percent of maximum specified range. Adjustable dampening shall be provided. External zero adjustment shall be provided. Accuracy shall be ± 0.2 percent of set span.

2. Transmitter housing shall be 304 stainless steel rated NEMA 4X. Transmitter shall be provided with an integral 4-digit LCD display with bar graph mounted on the side of the transmitter housing.

3. Transmitter shall be available with the following adjustable ranges for gage pressure applications:

Nominal Range (psig)	Minimum Span (psig)
0 to 150	1.5

F. Acceptable Manufacturers:

Endress+Hauser Cerabar S PMC 71 or approved equivalent.

G. Installation:

1. Install in accordance with manufacturer's instructions and as specified herein.

2. A root valve shall be provided at the process pressure tap on the associated process piping. All unused openings on the root valve shall be provided with plugs of the same material as the root valve. Safety instruments shall not be connected to the same process tap as instruments used for control, indication, or recording. Unless otherwise indicated on the Drawings, the instrument shall be directly connected to and supported from the root valve.

3. Where remote mounting is specified, stainless steel instrument tubing shall be provided from the process pressure tap to the pressure instrument. Unless otherwise specified, pressure instruments shall be located as close as practical to the process tap but shall be positioned to permit observation and maintenance from the process floor.

4. In liquid applications, the instrument tubing shall slope down from the process tap to the pressure transmitter and the pressure tap shall be made in the side of

the process pipe. In gas applications the instrument tubing shall slope up from the process tap to the pressure transmitter and the pressure tap shall be made in the top of the process pipe.

H. Application: Application and setup shall be in accordance with manufacturer's recommendations.

I. Test and Calibration: In accordance with manufacturer's recommendations.

J. Training: 4 hour training session covering the setup, calibration, maintenance, and troubleshooting of the pressure measurement system.

2.7 FIRE HYDRANTS

A. Fire hydrants shall be manufactured in full compliance with this specification and shall also comply with the AWWA Fire Hydrant Specification C-502, latest revision and the following:

1. Type: Compression – Dry Standpipe: Valve shall open against and close with the pressure. The design shall be such that all internal operating parts can be removed through the standpipe and main valve rod extended without excavating.

2. Size: Internal valve diameter shall be minimum 5-1/4".

3. Inlet Size and Type: 6" mechanical joint end with accessories.

4. Hose Nozzles: Each hydrant shall be equipped with two 2-1/2" I.D. hose nozzles with National Standard threads, one quarter turn bayonet lock or threaded in with O-ring seal and suitable locking arrangement.

5. Steamer Nozzle: Each hydrant shall be equipped with one 4-1/2" Steamer Nozzle having National Standard Threads, one quarter turn bayonet lock or threaded in with O-ring seal and suitable locking arrangement.

6. Direction of Open: Left, counter-clockwise.

7. Size and Shape of Operating Nut and Cap Nuts: to be 1-1/2" point to flat pentagon. Each hydrant shall be equipped with a weather cap or weather seal.

8. Seal Plate: The hydrant shall be so constructed that a moisture-proof lubricant chamber is provided which encloses the operating threads, thereby automatically lubricating the threads each time the hydrant is operated. The lubricant chamber shall be enclosed with at least three O-rings. The two lower O-rings will serve as pressure seals; the third O-ring will serve as a combined dirt and moisture seal to prevent foreign matter from entering the lubricant chamber. The hydrant shall be equipped with either and anti-friction washer or bronze bushing to reduce operating torque. The bonnet will be secured to the hydrant using bolts and nuts.

9. Standpipe – Groundline Safety Construction: The standpipe sections shall be connected at the groundline by a two part, bolted safety flange or breakable lugs. The main valve rod sections shall be connected at the groundline by a frangible

coupling. The standpipe and groundline safety construction shall be such that the hydrant nozzles can be rotated to any desired position without disassembling and removing the top operating components and the top section of the standpipe. The minimum inside diameter of the standpipe shall be 6".

10. Main Valve, Rod Assembly: The main valve rod assembly shall be so constructed to allow removal of all operating parts through the standpipe regardless of depth of bury, using a removal wrench which does not extend below the groundline of the hydrant. The main valve seat ring shall be bronze and its assembly into the hydrant shall involve bronze to bronze thread engagement, and the valve assembly pressure seals shall be obtained without the employment of torque compressed gaskets. The design of the main valve rod shall be such that the operating threads at the top of the rod and the valve assembly threads at the bottom of the rod are isolated from contact with water in the standpipe or in the hydrant inlet shoe.

11. Drain Valve: The operation of the drain mechanism shall be correlated with the operation of the main valve and shall involve a momentary flushing of the drain ports each time the hydrant is opened. The drain ports shall be fully closed when the hydrant valve is more than 2-1/2 turns open and the drainage channel in the bronze valve seat ring shall connect two or more outlet drain ports. No springs may be employed in the hydrant valve or drain valve mechanism.

12. Weep hole: in areas where the ground water stands at levels above that of the hydrant drain, the hydrant drain shall be plugged at the time of installation. Weep hole shall be plugged in accordance to manufacturers recommendations. If the drain is plugged, hydrants in service in cold climate areas should be pumped out after usage. Contractor shall mark such hydrants to indicate the need for pumping out after usage. Marking system shall be coordinated with Owner.

13. Depth of Bury: Normally hydrants shall be suitable for installation in trenches 4 feet 6 inches deep. Required parts and materials to adjust fire hydrants to different depth of bury shall be provided by the manufacturer to meet actual field conditions as required.

14. Painting Instruction: At least two prime coats and one finish color coat shall be used and must be applied by the original manufacturer, unless otherwise specified. Exposed area of fire hydrant shall receive one field coat of color Rust-Oleum paint after installation, unless otherwise directed by the inspector. Final field coat shall be brush applied. The wetted surface of the hydrant shoe shall be epoxy coated to prevent corrosion of the waterway. All fire hydrants that arrive at the job site that are not factory painted with color selected by Owner will be rejected. Color to be coordinated with Owner.

14. Pressure Rating: Test pressure 400 psi, working pressure 200 psi.

B. If the standard hydrant provided by the manufacturer does not fully comply with these specifications, but compliance can be attained by providing optional features, then each hydrant must be permanently marked to indicate the option or options that have been provided. The method of marking hydrants to indicate that options are included must be approved by the OWNER.

C. Hydrants shall be traffic model either Mueller Centurion, Kennedy K81-A, or approved equal.

2.8 YARD HYDRANTS

A. Yard hydrant shall be 3'-0" bury with a 1-1/2" FIP inlet and a 1-1/2" NST horizontal nozzle outlet. Hydrant shall be non-freezing and self-draining. Hydrant shall be operated by a top mounted 10-inch hand wheel; counterclockwise to open, clockwise to close. Hydrant must seal the drain outlet in all positions from ¼ -open to fully open. Hydrants shall have a 2" iron pipe riser with a cast iron stock top, and non-turning operating rod. Principal interior operating parts shall be brass and removable from the hydrant for servicing without removal of the hydrant.

B. Hydrants shall provide full backflow prevention.

C. Hydrants shall be Eclipse #2A post hydrant as manufactured by the Kupferle Foundry Company or approved equal.

D. Each hydrant shall be supplied with a stainless steel post-mounted hose rack.

E. Weep hole shall be protected by thrust block and 4 cubic yards of crushed stone.

2.9 RUBBER CHECK VALVE

A. Flanged Check Valve

1. Flanges shall be ANSI Class 125#
2. 3/8" minimum thickness steel back up rings shall be provided
3. Maximum 2" cracking pressure
4. Flange and retaining rings shall be 304 stainless steel
5. Elastomer material shall not be affected by highly chlorinated water
6. Valve shall have curved bill design
7. Valves shall be Tideflex Series 35 or approved equal

B. Slip On Check Valve

1. Check valve shall have 304 Stainless Steel mounting band made to clamp to discharge drain
2. Elastomer material shall not be affected by highly chlorinated water
3. Maximum 2" cracking pressure
4. Valve shall have curved bill design
5. Valve shall be Tideflex Series TF-2 or approved equal

2.10 RESTRAINED FLANGE ADAPTER

A. Restrained flange adapter shall be Model RFCA as manufactured by Romac Industries, Inc., or approved equal.

B. Restrained flange adapter shall be coated with a fusion epoxy coating and all nuts and bolts shall be 316 stainless steel.

2.11 COUNTER WEIGHTED FLAP VALVE

A. The flap valve shall have a cast iron body and cover.

B. The valve shall have resilient to bronze seats and the hinge pin and cotter pins shall be stainless steel.

C. The valve shall be constructed with a 10-degree offset from vertical to ensure positive closure

D. The weighted flap valve shall have a weight attached to the lid and allow adjustment.

E. The valve lid shall have a mechanical stop to ensure the lid cannot over rotate.

F. The flange shall be drilled using an ANSI 125# template.

G. All iron parts shall be coated in accordance with Division 9.

H. The valve shall be machined, assembled, and tested in the USA for quality assurance.

I. The manufacturer shall show proof of ISO 9001:2008 certification.

J. Valve and accessories shall be manufactured by Troy Valve, Model A2540 or approved equal.

2.12 BALL VALVES

A. Ball valve material shall be in accordance with the pipe schedule or as indicated on the drawings or as required for the intended service.

B. Ball valves shall be used where shown on the Drawings for all lines 2-inches in diameter or smaller.

C. Ball valves shall be full-port, true union type with ends to meet application.

D. Ball valves shall be manufactured of 316 stainless steel with Teflon seats and Viton "O" rings and shall be listed by NSF for use in potable water.

E. Ball valves shall be as manufactured by Nibco, Inc, Mueller, Trueline, or equal.

2.13 SAMPLE TAP

A. Sample tap shall have a plain end outlet and MIP inlet

B. Material shall be brass with a chrome plated finish

C. Sample tap shall be Matco-Norca FY-691 or approved equal

2.14 FLEXIBLE CONNECTOR

A. Contractor shall provide Proco Style 240 Single Sphere Connectors, equal flexible connectors as manufactured by The Metraflex Company, Chicago, Illinois, or equal flexible connectors by other approved manufacturers. Provide a minimum of two control rods for each flexible connector.

B. The flexible connectors shall be pressure rated for 225 psi at 230-degrees F. The flexible connectors shall meet or exceed the pressure, movement and dimensional rating of the "Spool" Arch Types as shown in the Rubber Expansion Joint division, fluid Sealing Association "Technical Handbook- Sixth Edition Table V".

C. Connectors shall be furnished complete with hot-dipped galvanized, plated carbon steel flanges for corrosion protection and shall be tapped to ANSI 150 pound standards.

D. Cover elastomer and tube elastomer shall be Nitrile (Buna-N) for water service. The flexible connectors shall be suitable for use conveying domestic potable water.

E. The flexible connectors shall be NSF 61 rated for potable water applications.

F. Flange bolts shall be installed with the bolthead on the flexible connector side of the flange.

2.15 LINK SEALS

A. Provide a Link Seal by Thunderline Corporation or equal at all pipe wall penetrations as indicated on the plans.

2.16 CORPORATION STOPS

D. Corporation stops shall be Ford Ballcorp or equal with corporation thread by flared end for copper tubing. All corporation stops shall be installed with a tapping saddle. Saddles shall be double strap epoxy coated ductile iron with stainless steel straps, bolts and nuts. Saddles shall be Ford Style FC202 or equal.

2.17 ELECTRIC VALVE ACTUATORS

A. GENERAL

1. All electric actuators shall conform to the requirements of AWWA Standard C540-93. Actuators shall contain motor, gearing, HOA switch, limit switches, torque switches, drive coupling, integral motor controls, position feedback transmitter for modulating valves and mechanical dial position indicator.

2. The motor shall be specifically designed for actuator service. The motor will be of the induction type with class F insulation and protected by means of thermal switches imbedded in the motor windings. Motor enclosure will be totally enclosed, non-ventilated.

3. Motors will be capable of operating on single phase or 3 phase power at the voltages as indicated on the electrical drawings.

4. Actuator enclosure shall be NEMA 4 (watertight). All external fasteners on the electric actuator will be stainless steel. Fasteners on limit switch and terminal compartments shall be captured to prevent loss while covers are removed.

5. All gearing shall be grease lubricated and designed to withstand the full stall torque of the motor. Manual over-ride shall be by hand wheel. Manual operation will be via power gearing to minimize required rim pull and facilitate easy change-over from motor to manual operation when actuator is under load. Return from manual to electric mode of operation will be automatic upon motor operation. A seized or inoperable motor shall not prevent manual operation.

6. Limit switches shall be furnished at each end of travel. Limit switch adjustment shall not be altered by manual operation. Limit switch drive shall be by counter gear. Limit switches must be capable of quick adjustment requiring no more than five (5) turns of the limit switch adjustment spindle. One set of normally open and one set of normally closed contacts will be furnished at each end of travel where indicated. Contacts shall be of silver and capable of reliably switching low voltage DC source from the control system furnished by others.

7. Mechanically operated torque switches shall be furnished at each end of travel. Torque switches will trip when the valve load exceeds the torque switch setting. The torque switch adjustment device must be calibrated directly in engineering units of torque. A dry contact shall be provided for remote monitoring of the torque switches.

8. All wiring shall be terminated at a plug and socket connector.

9. Quarter-turn actuators will be furnished with mechanical stops that restrict the valve/actuator travel.

10. Actuator must be capable of the following valve closing times/operating speeds: quarter-turn valves- 60 second closing time, gate valves and sluice gates- 12 inches per minute operating speed.

11. Actuators will be capable of operating in an ambient temperature range of -20 to+175 degrees F (without motor controls) and -20 to +160 degrees F (with motor controls).

12. All actuators in open/close service will be furnished with integral motor controls consisting of reversing starters, control transformer, phase discriminator, monitor relay (to signal fault conditions such as thermal switch trip, torque switch tripped in mid-travel, wrong phase sequence or phase failure), "open-stop-close" pushbuttons, "local-off-remote (HOA)" selector switch in addition to red and green indicating lights. An interface with the control system must be furnished with optical isolators to separate incoming voltage signals from the internal motor controls.

13. Actuators in modulating service will be selected such that the required dynamic valve torque is no more than 60% of the electric actuator's maximum rated breakaway torque. Power gearing in modulating actuators shall have zero backlash between the motor and actuator output.

14. All actuators in modulating service will be furnished with a feedback potentiometer in addition to the following motor controls: reversing starters, control transformer, phase discriminator, monitor relay, positioner, "open-stop-close" pushbuttons, "local-off-remote" selector switch in addition to red and green indicating lights. The positioner shall be capable of accepting a 4-20mADC command signal and positioning the valve by comparing the command signal with the present valve position as indicated by the feedback potentiometer mounted inside the actuator. The positioner shall be field adjustable to fail to the "open", "closed" or "last" position on loss of 4-20mADC command signal.

B. MANUFACTURER

1. Actuators shall be manufactured by AUMA Actuators, Inc. of Pittsburgh, Pennsylvania or approved equal.

C. INSTALLATION

1. All actuators shall be supplied and mounted on the valves by the valve manufacturer. Valve and actuator shall be considered a unit.

2. Actuators shall be tested by the valve manufacturer and shall be set up for correct operation by the valve manufacturer.

D. WARRANTY

1. Valve manufacturer shall warranty the valve and the actuator in accordance with Division 1.

2.18 BUTTERFLY VALVE

A. SCOPE

1. This specification covers the design, manufacture, and testing of AWWA Class 150B butterfly valves.

B. STANDARDS, APPROVALS AND VERIFICATION

1. The valves shall be designed, manufactured and tested in accordance with American Water Works Association Standards ANSI/AWWA C504 and C516.
2. The valves shall be certified to NFS/ANSI 61 Drinking Water System Components - Health Effects and certified to be Lead-Free in accordance with NSF/ANSI 61, Annex G.

3. Manufacturer shall have a quality management system that is certified to ISO 9001 by an accredited, certifying body.

C. CONNECTIONS

1. End connections shall flanged and fully conform with ANSI B16.1 for Class 250 iron flanges. 250 flanges shall be flat faced.

D. DESIGN

1. The valve shafts shall be of the through-type. Shafts shall be locked to the disc by O-ring sealed taper pins retained with stainless steel nuts.

2. The valve Discs shall be of the solid type without external ribs or vanes to obstruct flow.

3. Resilient seats shall be located on the valve disc and shall provide a 360° continuous, uninterrupted seating surface. Seats shall be mechanically retained with a stainless steel retaining ring and stainless steel Nylok® cap screws which shall pass through both the resilient seat and the retaining ring. The retaining ring shall be continuous or investment cast with overlapping sections, serrated grooves, and shoulders providing a Tri-Loc® system. The resilient seat's mating surface shall be to a 360° continuous, uninterrupted stainless steel body seat ring. Resilient seats shall be field adjustable and replaceable and shall not require epoxy, syringes, needles or pressure vessels to replace or adjust.

4. The sleeve bearings shall be provided in the valve hubs and shall be self-lubricating nylatron or teflon lined, fiberglass backed.

5. The thrust bearings shall be provided and shall be adjustable on valves 30" and larger.

6. The shaft seals shall be of the V-type and shall be replaceable without removal of the valve from the line or the shaft from the valve.

E. MATERIALS

1. Body: Class 150B valve bodies shall be ASTM A536 Grade 65-45-12 ductile iron.

2. Disc: Valve disc shall be ASTM A536 Grade 65-45-12 ductile iron.

3. Shafts: Shafts shall be ASTM A276 Type 304.

4. Seat: Resilient seat shall be Buna-N and mate to a Type 316 Stainless Steel body seat ring.

5. Hardware: All seat retaining hardware shall be Type 316 stainless steel.

F. ACTUATION

1. Electric actuation shall be provided as specified in this specification, section titled "Electric Valve Actuators".

G. MANUFACTURER

1. The valve exteriors for exposed service shall be coated with a universal, alkyd primer. Valve interiors shall be coated with an NSF/ANSI 61 epoxy coating approved for potable water.

2. Butterfly Valves shall be Val-Matic® Series #2000 as manufactured by Val-Matic® Valve & Mfg. Corporation, Elmhurst, IL. USA or approved equal.

2.19 FLOAT SWITCH

A. Float Switches: Float switches for both high and low level alarms shall include the following:

a. SPDT mercury switch.
b. Polypropylene casing or high density polyethylene.
c. Cable suspended by waterproof compression connector. Provide lengths suitable for tank and wet well applications.
d. Pipe mount with one inch vertical pipe to inside of tanks.
e. Enclose conductors in conduit from panels to top of tanks.
f. Float switches shall be type LS as manufactured by U.S. Filter Consolidated Electric, Flygt Corp., or equal product.

PART 3- EXECUTION

3.1 INSTALLATION

A. Valves shall be installed in accordance with Manufacturer's instructions.

3.2 SETTING OUTSIDE VALVES

A. Valves installed in trenches shall be located where indicated on the Plans. Valves and valve boxes shall be plumb. Valve boxes shall be placed directly over the valves, the top of the box being constructed flush with the surface of the finished grade in accordance with paragraph 1.3 of this section. After installation, trench shall be backfilled for a distance of 4 feet on each side of the box.

B. All underground valves shall have operator extension rods installed, and shall be pinned at the operating nut. The extension shall come to within one foot of the ground.

3.3 IDENTIFYING VALVES

A. The Contractor shall identify each valve and cleanout except potable water faucets and hose bibbs. The identification system shall proceed consecutively from the influent to the effluent. The same type valves should have a common identification character, for example:
1. Gate Valves - GV1, GV2
2. Plug Valves - PV1, PV2
3. Cleanout - CO1, CO2

B. Valves with a common function should also have a common identification character, for example:
1. Sludge Return Gate Valves; GV1A, GV1B

2. Waste Sludge Plug Valves; PV1B, PV2B

C. Each cleanout, valve, and/or cock shall be provided with a 1 inch x 2 inch (min.) heavy brass tag and/or plate. Each tag shall bear the identifying number of the valve as shown above. Each valve tag shall receive a heavy protective coating of a clear lacquer.

D. The tags shall be attached to the valves by handwheel or lever where split-key rings soldered so that rings and tags cannot be removed except where shown in concrete as per standard details. The numbers and letters shall be of block type, 1/2 inch high, stamped thereon and filled with black enamel.

E. The contractor shall furnish and install an approved valve directory. The directory shall show each valve number, the location of each valve, and the equipment, apparatus, or fixtures controlled by that valve, and the number of any other valve or valves that must be operated in conjunction with said valve. The directory shall be framed in a glazed frame with screw eyes and wires for hanging same, and shall be located, as directed by the engineer. Submit shop drawing of valve directory for approval before tagging any valves. Provisions shall be made for unseating way plug valves using the pedestal and lever as shown on the standard detail sheet.

END OF SECTION

SECTION 11200
SUBMERSIBLE WATER MIXER

PART 1 – GENERAL

1.1 SCOPE

A. This section covers submersible tank mixing systems up to 0.5 HP in size intended for continuous use while submersed in potable water storage tanks. Each mixer shall have the ability to function continuously on a year-round basis, regardless of drain and fill cycles. Each mixer shall consist of a water-filled submersible motor, an impeller and a non-submersible control center that houses all control electronics.

1.2 THE REQUIREMENT

A. CONTRACTOR shall furnish a submersible mixer with control center and install submersible mixing system together with controls and accessories necessary for a complete and operable system.

B. CONTRACTOR shall furnish electrical conduit with 115VAC Single Phase voltage and a Safety disconnect switch.

1. 20 Amp non-GFCI circuit breaker up to the point of installation of the mixing system utilizing a control center by the tank manufacturer.

C. CONTRACTOR shall also provide conduit from control center or Safety disconnect to tank penetration for submersible motor cable and penetration through tank for same cable.

1.3 REFERENCE SPECIFICATIONS, CODES AND STANDARDS

A. Comply with the applicable reference specifications as specified in the General Requirements

B. Occupational Safety and Health Administration, OSHA

C. NSF/ ANSI Standard 61

D. Underwriters Laboratories Inc., UL 508

1.4 CONTRACTOR SUBMITTALS

A. NSF Certification

1. Copies of the NSF-61 certified listing for all material being placed inside the tank and headspace, including the motor and power cable.

B. Installation, Operations, and Maintenance Manuals shall be obtained from the equipment manufacturer and submitted. The following sections shall be included:

1. General equipment specifications and data sheets
2. Installation, start-up, operation, and maintenance instructions
3. Factory-recommended maintenance schedule
4. Wiring diagrams specifying what electrical wiring needs to be done onsite during and prior to the installation, and by which responsible party
5. List of equipment or tooling necessary for diagnostics, trouble-shooting, repair or general maintenance

1.5 QUALITY ASSURANCE

A. Each mixing system shall be tested prior to deployment according to standard engineering practices at the factory testing facilities.

1.6 WARRANTY

A. For the period of time beginning with shipment to Buyer and ending on the time periods listed below, the Product is warranted to be substantially free from defects in material and workmanship and to conform to Seller's specifications applicable to the Product –
   1. Three (3) years on all supplied parts
   2. One hundred twenty (120) days labor

PART 2 – PRODUCTS

2.1 PERFORMANCE

A. Mixing system shall completely mix reservoir according to the following minimum performance requirements. These requirements can be measured and validated after installation by operators with readily-available tools such as temperature probes and total chlorine grab samplers.
   1. Temperature Uniformity
      a. For tanks up to 750,000 gallons in volume: All temperatures shall converge to within 0.50°C within 24 hours after mixer is installed and activated.
   2. Disinfectant Residual Uniformity
      a. For tanks up to 750,000 gallons in volume: Disinfectant residual within top five feet of tank and bottom five feet of tank will converge to within 0.20 ppm within 24 hours after mixer is installed and activated. During continuous operation of the mixer, disinfectant residual will converge to within 0.20 ppm at least once every 24 hours.

2.2 GENERAL

A. Mixing system consists of a spiral-shaped nozzle mounted in a submersible stainless steel casing. System is lowered to the tank floor and creates a vertical flow pattern inside the tank. Devices with an externally mounted pump shall not be acceptable. Mixer operation shall be independent of tank drain and fill cycles to ensure constant mixing. Mixer shall weigh less than 45 pounds (~20 kg) and be able to be hoisted, installed, and/or removed by on-site personnel without additional equipment needed, and so that there is no crush hazard or entanglement hazard present, and so that weight of mixer on tank floor does not cause damage to interior coating.

B. Mixing system inlet shall be elevated at a minimum of 6 inches above tank floor to avoid disturbing accumulated tank sediment or entraining particles and causing accelerated wear of moving parts.

C. Mixers using submersible pump with slit or "water sheet" or horizontal motor mounting designs are not acceptable.

D. Power source for mixer shall be 115VAC single phase grid power to allow unit to continue 24/7 operation.

2.3 CONSTRUCTION

A. Components – wet-side: shall be NSF/ANSI Standard 61 certified.

Equipment entering tank shall not adhere to, scratch or otherwise cause damage to internal tank coating or put undue stress on the materials of the tank construction. Equipment shall fit through a standard hatch of size 18" x18" or larger.

Each submersible mixer shall consist of the following components, regardless of the power source selected:

1. Nozzle
    a. AISI Type 316 Stainless Steel
    b. Electropolished to minimize surface corrosion
2. Nozzle housing
    a. AISI Type 316 Stainless Steel
    b. Brush finish to minimize surface corrosion
    c. Buoyancy mechanism to keep nozzle pointing upright no matter the angle of the tank floor
    d. Chlorine/chloramine resistant rubber foot pad to avoid scratching tank floor
    e. Integrated power cable and lowering mechanism for simplicity
3. Motor
    a. Stainless Steel 304 body
    b. Chlorine/Chloramine resistant rubber seals
    c. Fully submersible

2.4 CONTROLS

A. Unit shall be equipped with all necessary controls, inter-wired, to provide the following minimum functions:
    1. On/Off switch to control power to mixer.
    2. Any other controls shown on electrical and instrumentation drawings

B. Components – dry-side: 15VAC control center shall consist of the following components:
    1. Enclosure
        a. Type 3R
        b. Lockable
        c. Weather Resistant
        d. Overall weight of control center not to exceed 50 lbs.
        e. Green and Red LED Indicator lights show motor status
        f. Thermostat controlled Fan
    2. Motor Controller/VFD
        a. Rated to 1.0 HP
        b. Operating temperature range -4 °F to 129 °F (-20 °C to 54 °C)
        c. Manual speed control
        d. Thermal shut-off protection built-in
        e. Current overload protection built-in
        SCADA outputs included:
        f. Digital Output signal indicating motor running
        g. Digital Output signal indicating fault
        h. Digital Input/output signal allowing remote motor on/off
        i. Digital Output signal indicating HOA switch status
        j. RS-485 or Dry Contact connections
    3. GFCI-protection
        a. 115 VAC, single-phase, with a 300mA trip level GFCI included inside control center

2.5 HATCH

A. Mixer Manufacturer shall provide a 12"x12" square cutout hatch to be installed on the tank roof by the Tank Manufacturer
B. Hatch shall provide lockable clasp
C. Hatch shall have three (3) 1" penetrations hatch side to allow for mixer installation
D. Tank manufacturer shall provide fittings to prevent moisture intrusion into tank

2.6 ACCEPTABLE MANUFACTURERS:

A. The mixer shall be model PWM 150 (115) with Control Center (PCC 155) as manufactured PAX Water Technologies (Richmond, California), or approved equal.

PART 3 – EXECUTION

3.1 INSTALLATION

A. The CONTRACTOR shall furnish services of a factory-trained installation contractor or crew having experience with installation procedures and operation and maintenance requirements for the type of equipment installed under these specifications. Mixer must be able to be installed through an 18x18 inch hatch. Mixer must be able to be installed without draining tank or taking tank out of service. Wet-side of Mixer shall weigh less than 45 pounds (~20 kg) and dry-side shall weigh less than 50 pounds (~22 kg). Both wet-side and dry-side shall able to be hoisted, installed, and/or removed by on-site personnel without additional equipment needed, and so that there is no crush hazard or entanglement hazard present, and so that weight of mixer on tank floor does not cause damage to interior coating.

B. Tank penetration shall be above tank water line, through the hatch side-wall.
   1. Fitting will prevent moisture intrusion into tank and ideally be horizontally oriented.
   2. Fitting shall be 1 inch diameter fitting to allow cable to pass through.
   3. Strain relief for power cable shall be part of the contractor-supplied fitting for tanks more than 30 feet in depth.

C. Installation of the in-tank ("wet-side") components may be performed by tank manufacturer personnel during tank manufacture.

D. The mixer and SCADA interface or control center shall be installed in accordance with approved procedures submitted and as shown, unless otherwise approved in writing from the Factory.

3.2 TRAINING

A. Tank Manufacturer staff (or their representatives) will instruct designated UTILITY personnel in the safe and proper operation of the Mixer. This training will reference the operations manual provided with equipment, and show how to check for proper functioning of the equipment.

END OF SECTION

SECTION 11810
PIPE INDENTIFICATION MARKERS

PART 1- GENERAL

1.1 SUMMARY

A. Scope

1. This section includes the installation of the pipe identification markers as shown on the Drawings and as specified herein.

1.2 SUBMITTALS

A. Provide submittals in accordance with Specification 01330 "Submittal Procedures.

B. Shop Drawings

1. The Contractor shall submit complete shop drawings of all equipment furnished for this project as covered by these specifications. The submittals shall include pipe identification abbreviations, flow arrow directions, and valve tags identification. The contractor's submittal must include a certification that the submitted material describes exactly the equipment to be provided or a list of deviations from the specifications with an explanation of each deviation.

1.3 QUALITY ASSURANCE

A. Qualifications

1. Manufacturers regularly engaged in the manufacture of pipe markers as specified herein and who can demonstrate equipment of this specified design, in actual service for a period of not less than 10 years will be considered as acceptable manufacturers.

2. Manufacturers shall show evidence of quality assurance in manufacturing and supplying equipment essential in details to the equipment herein specified.

1.4 DELIVERY, STORAGE, AND HANDLING

A. Packing, Shipping, Handling, and Unloading

1. Deliver materials to the Site to ensure uninterrupted progress of the Work. Deliver anchor bolts and anchorage devices, which are to be embedded in cast-in-place concrete in ample time to prevent delay of that Work.

B. Acceptance at Site

1. All boxes, crates, and packages shall be inspected by Contractor upon delivery to the Site. Contractor shall notify Engineer, in writing, if any loss or damage exists

to equipment or components. Replace loss and repair damage to new condition in accordance with manufacturer's instructions.

C. Storage and Protection

1. Store materials to permit easy access for inspection and identification. Keep all material off the ground, using pallets, platforms, or other supports. Protect steel members and packaged materials from corrosion and deterioration.

2. Store all equipment in covered storage off the ground and prevent condensation and in accordance with the manufacturer's recommendations for long-term storage.

1.5 WARRANTY

A. Warranty shall be in accordance with Division 1

PART 2- PRODUCTS

2.1 PIPE MARKERS

A. Pipe markers shall be vinyl self-adhesive with a peel off backing suitable for indoor or outdoor piping with pipe temperatures from -40deg F to 175 deg F.

B. Markers shall be in accordance with ASME (ANSI) A13.1-2007.

C. Marker Letters

1. Marker letters shall meet the requirement of ASME (ANSI) specifications and shall conform to the follow table.

LETTER SIZE TABLE

Outside Diameter of Pipe or Covering*	Size of Legend Letters
3/4-inches to 1-3/8 inches	1/2-inches
1-1/2-inches to 2-3/8--inches	3/4-inches
2-1/2-inches to 7-7/8-inches	1-1/4-inches
8-inches to 10-inches	2-1/2-inches
10-inches and Over	3-1/2-inches

*Outside diameter shall include pipe diameter plus insulation and jacketing.

2.2 DIRECTIONAL ARROWS

A. Directional arrows shall be 5 nil self-adhesive vinyl on a roll. Width of roll shall be 2" with a continuous band of arrows.

PART 3- EXECUTION

3.1 INSTALLATION

A. Pipe markers shall be installed on clean dry pipe.

B. All pipe markers shall be installed plumb and level.

C. Pipe markers shall be installed every 10 feet, at the entrance and exit from buildings, inlet, and outlet from tanks and general where necessary to clearly identify pipes.

D. All pipe markers shall be installed in strict accordance with manufacturer's instructions.

END OF SECTION

SECTION 11820
DISINFECTION AND FLUSHING OF WATER TANKS AND PIPING SYSTEMS

PART 1 - GENERAL

1.01 REFERENCES

A. The following is a list of standards which may be referenced in this section:

1. American Water Works Association (AWWA):

   a. B300, Hypochlorites.
   b. B302, Ammonium Sulfate.
   c. B303, Sodium Chlorite.
   d. C651, Disinfecting Water Mains.
   e. C652, Disinfection of Water Storage Facilities.
   f. C653, Disinfection of Water Treatment Plants.

2. Standard Methods for the Examination of Water and Wastewater, as published by American Public Health Association, American Water Works Association, and the Water Environment Federation.

1.02 SUBMITTALS

A. Informational Submittals:

1. Plan describing and illustrating conformance to appropriate AWWA standards and this Specification.
2. Procedure and plan for cleaning system.
3. Procedures and plans for disinfection and testing.
4. Type of disinfecting solution and method of preparation.
5. Method of disposal for highly chlorinated disinfecting water.

PART 2 - PRODUCTS

2.01 WATER FOR DISINFECTION

A. Clean, uncontaminated, and potable.

B. Contractor shall make arrangements for water supply and convey water in disinfected pipelines or containers.

2.02 CONTRACTOR'S EQUIPMENT

A. Furnish chemicals and equipment, such as pumps and hoses, to accomplish disinfection.

B. Water used to fill pipeline may be supplied using a temporary connection to existing distribution syste1n. Provide protection against cross-connections as required by AWWA C651.

2.03 DISINFECTANT

A. All disinfection shall be accomplished using 12 percent sodium hypochlorite.

PART 3 - EXECUTION

3.01 GENERAL

A. Conform to AWWA C651 for pipes and pipelines, C652 for tanks and reservoirs, and C653 for water treatment plants, except as modified in these Specifications.

B. Disinfect items installed or modified under this Project intended to hold, transport, or otherwise contact potable water, or as identified herein, including, but not limited to, the following:

1. Both water booster pumps.
2. All exposed and buried water piping.
3. Disinfect surfaces of materials that will contact disinfected water, both during and following construction, using one of the methods described in AWWA C652 and C653. Disinfect prior to contact with disinfected water. Take care to avoid recontamination following disinfection.

C. Prior to application of disinfectants, clean all items of loose and suspended material.

D. Allow freshwater and disinfectant solution to flow into pipe or vessel at a measured rate so chlorine-water solution is at specified strength. Do not place concentrated liquid commercial disinfectant in pipeline or other facilities to be disinfected before it is filled with water.

3.02 SEQUENCING AND SCHEDULING

A. Commence disinfection after completion of following:

1. Completion and acceptance of internal painting of system(s).
2. Hydrostatic and pneumatic testing, pressure testing, functional and performance testing and acceptance of pipelines, pumping systems, structures, and equipment.
3. Disinfection of equipment and associated system piping.

3.03 PIPING

A. Cleaning:

1. Before disinfecting, clean all foreign matter from pipe in accordance with AWWA C651.
2. If the continuous feed method or the slug method of disinfection, as described in AWWA C651 is used, flush pipelines with potable water until clear of suspended solids and color. Provide hoses, temporary pipes, ditches, and other conduits as needed to dispose of flushing water without damage to adjacent properties.

3. Flush service connections and hydrants. Flush distribution lines prior to flushing hydrants and service connections. Operate valves during flushing process at least twice during each flush.
4. Flush pipe through flushing branches and remove branches after flushing is completed.
5. A minimum flushing velocity of 3.0 fps must be maintained throughout the flushing process.

B. Disinfecting Procedure: In accordance with AWWA C651, unless herein modified.

3.04 TANKS

A. Preparation

1. Do not disinfect water contact surfaces or fill water storage tanks until application of coating systems is complete, coatings have fully cured, and field quality control inspection is complete.
2. Allow number of days in accordance with manufacturer's instructions and as directed by Engineer for full cure of coating systems on water contact surfaces before flushing, disinfecting, or filling with water.

B. Application:

1. Disinfection: AWWA C 652 Method 2 or 3.
2. The tank shall be filled with clean water furnished by the Owner.

3.05 WET WELLS

A. Cleaning:

1. Clean interior surfaces using water under pressure before sterilizing. Isolate tank from system to prevent contaminating materials from entering the distribution system. Cleaning shall:

   a. Remove all deposits of foreign nature.
   b. Remove all biological growths.
   c. Clean the slopes, walls, top, and bottom
   d. Avoid damage to the structure.
   e. Avoid pollution or oil deposits by workers and equipment.

2. Dispose of water used in cleaning in accordance with applicable regulations before adding disinfecting solution to tank and wetwell.

B. Disinfecting Procedure: In accordance with AWWA C652, unless herein modified. Parts of structures, such as ceilings or overflows that cannot be immersed, shall be spray or brush disinfected.

3.06 DISPOSAL OF HEAVILY CHLORINATED WATER

A. Do not allow flow into a waterway without neutralizing disinfectant residual.
B. See the appendix of AWWA C651, C652, and C653 for acceptable neutralization methods.

3.07 TESTING

A. Collection of samples:

1. Coordinate activities to allow Samples to be taken by Owner in accordance with this Specification.
2. Provide valves at sampling points.
3. Provide access to sampling points
4. At least 2 samples shall be taken 16 hours apart.
5. Sampling locations must be separated a minimum of 1,200 linear feet.

B. After all water piping, tanks, and equipment has been cleaned, disinfected, and refilled with potable water, Owner will take water samples and the Contractor shall pay for the laboratory analysis.

C. No coliform bacteria may be detected during sampling. If minimum samples required above are bacterially positive, disinfecting procedures and bacteriological testing shall be repeated until bacterial limits are met. The Contractor shall be responsible for additional laboratory testing costs if additional testing is required.

END OF SECTION

SECTION 13100
PEDESPHERE ELEVATED WATER STORAGE TANK

PART 1- GENERAL REQUIREMENTS

1.1 SCOPE

A. The Tank Manufacturer (Manufacturer) shall be responsible for all labor, materials and equipment necessary for the design, fabrication, construction, painting, disinfection and testing of an elevated, welded carbon steel water storage tank supported by a steel support pedestal, commonly referred to as a "Pedesphere". Design and construction of the Elevated Tank shall conform to all requirements of AWWA D100 Standard for Welded Carbon Steel Tanks for Water Storage, except as modified by the requirements of these contract documents.

1.2 QUALIFICATION OF MANUFACTURER

A. The design and construction of the "Pedesphere" style water storage tank shall only be undertaken by a Manufacturer with a minimum of ten years' experience with elevated tank construction. The Manufacturer must be able to demonstrate experience through the design and construction of at least five "Pedesphere" style water tanks. The Manufacturer shall not subcontract the design or erection of the steel tank, pedestal and base cone support structure.

1.3 STANDARD SPECIFICATIONS

A. All work on the water storage tank shall fully conform to the requirements of the latest published editions of the following Standard Specifications:

1. AWWA (American Water Works Association) D100 Standard for Welded Carbon Steel Tanks for Water Storage.
2. AWWA D102 - Standard for Painting Steel Water Storage Tanks
3. AWWA C652 - Standard for Disinfection of Water Storage Facilities.
4. AWS (American Welding Society) D1.1
5. NSF (National Sanitation Foundation) 61 - Materials in contact with Potable Water.
6. Steel Structures Painting Council Manual - Volume 1 - Good Painting Practice.
7. Steel Structures Painting Council Manual - Volume 2 - Systems and Specifications.
8. ACI 318 - Building Code Requirements for Reinforced Concrete
9. ACI 301 –Specifications for Structural Concrete

1.4 TANK DETAILS

A. The elevated tank shall be all-welded construction of the most economical design. All members of structural steel or of reinforced concrete shall be designed to safely withstand the maximum stresses to which they may be subjected during erection and operation.

1. The minimum operating capacity of the storage tank will be 500,000 US gallons.
2. The capacity of the tank, low to high water level, shall be contained within a maximum operating range of 37.5 feet.

3. The height of the tank, top of foundation to High Water Level, be as shown on the plans.
4. The tank shall have the minimum required freeboard capacity as determined by AWWA D100; but no less than 12-inches.
5. Top of foundation elevation shall be as shown on the plans.
6. The existing ground elevation is as shown on the plans.
7. The finished ground elevation shall be as shown on the plans.

1.5 WORKING DRAWINGS

A. After contract award and prior to construction, the Manufacturer shall provide engineering drawings and design calculations for the elevated steel tank and the foundation. Drawings shall show the size and location of all structural components and the foundations along with reinforcement details, the required strength and grade of all materials and the size and arrangement of principle piping and equipment. The drawings and calculations shall bear the certification of a professional Engineer licensed in the Commonwealth of Virginia. The design coefficients and resultant loads for snow, wind and seismic forces, and the methods of analysis shall be documented.

B. Shop drawing submittals shall be in accordance with Division 1.

PART 2- DESIGN

2.1 GENERAL

A. The structural design of the elevated storage tank shall conform to the following design standards except as modified or clarified as follows:

1. Foundations – AWWA D100 and ACI 318 – Building Code Requirements for Reinforced Concrete.
2. Steel Tank - AWWA D100
3. Steel Tank Painting – AWWA D102.

2.2 ENVIRONMENTAL LOADS – AWWA D100 AND ASCE 7

A. Wind Load – Wind pressure shall be determined in accordance with AWWA D100, Section 3.1.4. Basic wind speed used in the Wind Pressure formula shall be determined using the mapped site location and Figure 1 of AWWA D100. For tanks located in coastal regions, the Owner's Engineer shall consider the use of an increased basic wind speed as appropriate.

Basic Wind Speed (BWS) = __90__ MPH

B. 2.2.2. Seismic Load – Seismic loads shall be determined in accordance with AWWA D100, Section 13.

1. Region Dependent Transition Period (TL) = __12__ (Fig. 19)
2. Site Class shall be determined in accordance with AWWA D100 Table 25 and the site geotechnical report
3. MCE Spectral Response Acceleration at 0.2sec (SS) and 1sec (S1) (Fig's. 5-18)
   SS =____25____

S1 =____6____
Longitude =____78 13 20.92____ (at tank center)
Latitude =____37 58 16.64____ (at tank center)

4. Importance Factor (IE) =____1.5____ (Table 24)

C. Snow Load – Snow load shall be determined in accordance with AWWA D100, Section 3.1.3.1.

2.3 FOUNDATION

A. A Geotechnical investigation has been carried out at the site and a copy of the report is included with the Contract Documents. Recommendations for the foundation and allowable bearing capacities are defined in this report. The Owner shall retain the services of the Geotechnical consultant to verify the adequacy of the bearing stratum after the Manufacturer has carried out the excavation and before any concrete or reinforcement is placed. The concrete foundation shall be designed by the Manufacturer based upon the recommendations in the geotechnical report.

2.4 STEEL TANK

A. GENERAL

1. The tank and supporting structure shall be of all-welded steel design and construction. All materials, design, fabrication, erection, welding, testing and inspection of the steel tank shall be in accordance with the applicable sections of AWWA D100 except as modified in this document. The tank shall have a spheroidal shape.
2. The supporting structure shall be a butt-welded single pedestal having a minimum shaft diameter adequate for the capacity and height of tower. Transition sections at the top and bottom of the pedestal shall be in accordance with the manufacturer's standard. The transition from the base to the pedestal shall be a truncated cone with a compression ring. The transition from pedestal to tank shall be a double-curved smooth knuckle.

B. STEEL PLATES

1. The minimum thickness for any part of the structure shall be 3/16 inch for parts not in contact with water and 1/4 inch for parts in contact with water. At junctions in plates where meridional forces are discontinuous such as cone to cylinder junctions or cone to base plate junctions, a tension or compression ring may be required to resist radial forces generated by the discontinuous membrane forces. In these regions, allowable stresses shall not exceed the following stress:
   a. Tension ring stress shall not exceed the lesser of 15,000 PSI or one half of the minimum specified yield of the plate material.
   b. Compression ring stresses shall not exceed 15,000 PSI.
   c. The overturning moment used in designing the pedestal and foundation shall include the moment due to eccentricity of the gravity loads caused by deflection of the structure under wind or seismic conditions (i.e. P-delta effect).

2.5 CATHODIC PROTECTION SYSTEM

A. The manufacturer shall design and supply a passive, sacrificial magnesium anode cathodic protection system.
   1. The design, installation, and testing of the system shall be in accordance with AWWA D106-16 or the latest AWWA standard for cathodic protection systems using sacrificial anodes

B. The anodes shall be mounted in the lower portion of the tank, that they may be always submerged.

C. The resistivity of the water shall be determined by the tank manufacturer.

D. The design life of the anodes shall be 10 years.

E. An operation and maintenance manual will be provided in accordance with AWWA M106-16 Sec. 5.3

2.6 METAL BELLOWS EXPANSION JOINTS

A. Metal expansion joints shall consist of hydraulically formed metal bellows with carbon steel welded end fittings.
B. The hydraulically formed metal bellows shall be either single or universal dependent upon the required lateral movements caused by settlement or thermal expansion and contraction as determined and designed by the tank manufacturer.
C. The bellows shall be of 316 stainless steel.
D. Joints shall be designed to meet 150 psi pressures and temperatures for the system as determined by the tank manufacturer.
E. Joints shall also be capable of accommodating piping system and equipment movements as determined by the tank manufacturer.
F. Joints are to be provided with stainless steel liners and carbon steel covers.
G. Tie rods shall be included, if required by the tank manufacturer, to prevent overextension of the expansion joints from pressure thrust loads. The number and size of the control rods shall be sufficient for the maximum system test pressure.
H. Expansion joints shall be Flexicraft Industries, Model N or approved equal.

2.7 RESTRAINED COUPLING

A. Joint Restraint to prevent axial separation shall be incorporated into the design of the sleeve or coupling used to connect two plain pipe ends.
B. The restraint mechanism shall consist of a plurality of individually actuated gripping surfaces to maximize restraint capability. Torque limiting twist off nuts shall be used to insure proper actuating of the restraint devices.
C. Coating
   1. All wedge assemblies and related parts shall be processed through a phosphate wash, rinse, and drying operation prior to coating application.
   2. The coating shall consist of a minimum of two coats of liquid thermoset epoxy coating with heat cure to follow each coat.
   3. All casting bodies shall be surface pretreated with a phosphate wash, rinse, and sealer before drying.
   4. The coating shall be electrostatically applied and heat cured.

5. The coating shall be a polyester based powder to provide corrosion, impact, and UV resistance.
6. The coating system shall be MEGA-BOND, by EBAA Iron, Inc., or approved equal.

D. Ductile Iron components shall be of a minimum of 65-45-12 ductile iron meeting the requirements of ASTM A536 of the latest revision and shall be tested in accordance with the stated standard.

E. The restrained joining system shall meet the applicable requirements of AWWA C219, ANSI/AWWA C111/A21.11, and ASTM D2000.

F. The restrained joining system shall be the EBAA Iron Series 3800 or approved equal.

PART 3- CONSTRUCTION

3.1 CONCRETE FOUNDATION

A. The foundation shall be designed and constructed by the Manufacturer to safely and permanently support the structure. The basis of the foundation construction shall be consistent with the soils investigation data included herein in the Project Manual. The concrete foundation shall be constructed in accordance with ACI 301. Minimum concrete compressive strength shall be as specified in Section 03300, "Cast-In-Place Concrete".

3.2 STEEL TANK CONSTRUCTION

A. GENERAL

1. The erection of the steel tank shall comply with the requirements of Section 10 of AWWA D100 except as modified by these documents.

B. WELDING

1. All shop and field welding shall conform to AWS and AWWA D100, Section 10. The Manufacturer shall ensure that the welders or welding operators are qualified in accordance with ASME Section IX or ANSI/AWS B2.1. Seal welding shall be used to create water tight welds shall be used for all welds inside of the tank including all wetted and dry areas.

C. FABRICATION

1. All fabrication and shop assembly shall conform to the requirements of AWWA D100, Section 9, Shop Fabrication.

D. ERECTION

1. Plates subjected to stress by the weight or pressure of the contained liquid shall be assembled and welded in such a manner that the proper curvature of the plates in both directions is maintained. Plates shall be assembled and welded together by a procedure that will result in a minimum of distortion from weld shrinkage.

E. INSPECTION AND TESTING

1. Inspection of shop and field welds shall be in accordance with AWWA D100, Section 11, Inspection and Testing. All inspection shall be performed prior to interior and exterior field painting. Radiographic inspection shall be performed by an independent testing agency with all costs included in the Manufacturer's bid and paid by the Manufacturer.

F. ROOF LAP JOINTS

1. All interior lap joints shall be sealed by means of caulking or continuous seal welding. This shall include penetrations of roof accessories.

G. PAINTING AND DISINFECTION

1. Surface preparation and coating of all steel surfaces shall be in accordance with Section 09920 "Coating for Steel Water Storage Tank".
2. The tank shall be tested and disinfected per AWWA and Virginia Department of Health standards.

PART 4- ACCESSORIES

4.1 GENERAL

A. The following accessories shall be provided in accordance with these specifications. All items shall be in full conformity with the current applicable OSHA safety regulations and the operating requirements of the structure.

4.2 CONDENSATE CEILING AND TANK DRAIN ASSEMBLY

A. The tank drain assembly shall be provided by and installed by the tank manufacturer. Provide 3-inch non-freeze drain valve, pipes, couplings, nipples, clamps and rubber hose as required.

B. Check valve for condensate ceiling drain shall be oriented in the horizontal position.

C. Materials:
1. 3-inch non-freeze drain valve, check valve, pipes, 45-degree elbow, clamps, nipples, couplings: 316 stainless steel
2. Rubber hose:

4.3 LADDERS

A. Access ladders shall be provided at the following locations:

1. Grade to Condensate Ceiling
2. Condensate Ceiling to upper platform.
3. Upper platform to tank floor manhole.
4. Upper platform to steel tank roof mounted on access tube interior.
5. Exterior of access tube to provide access from the roof manhole to the tank floor.

B. Ladder side rails shall be a minimum 3/8 inch by 2 inches with a 16 inch clear spacing. Rungs shall not be less than 3/4 inch, round or square, spaced at 12 inch centers. All

ladders shall be carbon steel welded to the tank surface. The surface of the rungs shall be knurled, dimpled or otherwise treated to minimize slipping. At platforms or landings, the ladder shall extend a minimum 4 feet above the platform. Ladders shall be secured to adjacent structures by brackets located at intervals not exceeding 10 feet. Brackets shall be of sufficient length to provide a minimum distance of 7 inches from the center of the rung to the nearest permanent object behind the ladder.

4.4 FALL PROTECTION

A. Ladders shall be equipped with a fall arrest system meeting OSHA regulations. The system shall be supplied complete with safety harnesses, locking mechanisms, lanyards and accessories for two persons.

4.5 UPPER PLATFORM

A. An upper platform shall be located at the top of the support pedestal to provide access from the pedestal ladder to the roof access ladder located on the interior of the access tube. Platform shall include a 24" x 36" access hatch with opening to allow ladder and safety device to continue 48" minimum above the platform floor.

4.6 ROOF HANDRAIL

A. A roof handrail shall be provided surrounding the roof manholes, vents and other roof equipment. Handrail shall comply with OSHA requirements. Handrail shall be carbon steel welded to tank roof and shall be designed to hold up to three (3) radio antennas.

4.7 CONDENSATE CEILING

A. Steel condensate ceiling located at the junction of the pedestal shaft and base cone complete with drain and valve and 24" x 36" access hatch with opening to allow ladder and safety device to continue 48" minimum above the platform floor.

4.8 OPENINGS

A. ROOF HATCHES

1. Access Tube Hatch

a. Hatch shall be 30 inch diameter and allow access from the roof to the interior of the tank. The hatch will be hinged and equipped with a hasp for locking. The hatch cover shall have a 2 inch downward edge. The openings shall have a minimum 4 inch curb. Hatch body shall be constructed of aluminum or carbon steel. Hatch cover shall be designed such that exterior rainwater cannot enter.

2. Exhaust Fan Hatch

a. Hatch shall be 24 inch diameter and flanged with a removable cover so constructed that an exhaust fan may be connected for ventilation during painting operations. Hatch cover shall be designed such that exterior rainwater cannot enter.

B. TANK VENT

1. The tank vent should be centrally located on the tank roof above the maximum weir crest elevation. The tank vent shall have an intake and relief capacity sufficiently large that excessive pressure or vacuum will not be developed during maximum flow rate. Maximum flow rate should be based on a break in the inlet/outlet pipe when the tank is full. The vent shall be designed, constructed and screened so as to prevent the ingress of wind driven debris, insects, birds and animals. The vent should be designed to operate when frosted over or otherwise clogged. The screens or relief material shall not be damaged by the occurrence and shall return automatically to operating position after pressure or vacuum is relieved. Tank vent shall be constructed of aluminum or carbon steel.

C. TANK FLOOR MANHOLE

1. A minimum 18 x 24 inch elliptical access manhole shall be provided in the tank bottom accessible from the upper platform or from a ladder that extends from the platform to the opening. The hatch shall open inward.

D. PEDESTAL HATCH

1. A 24" diameter manhole shall be located near the top of the pedestal for access to the exterior painter's rail located near the tank/pedestal interface. This opening shall be accessible from the upper pedestal platform.

4.9 ACCESS TUBE

A. A minimum 60" diameter access tube shall be provided to allow for additional room required for future antenna conduit. The access tube will be provided from the top of the pedestal to the tank roof.

4.10 TANK MIXER

A. A tank mixer shall be supplied and installed by the Tank Manufacturer as specified in Section 11200 with all appurtenances, hatches, penetrations, and accessories required.

4.11 RIGGING

A. Interior and exterior rigging devices shall be provided for painting, inspecting and maintaining the structure and accessories. A continuous bar or tee rail near the top of the exterior support structure shall be provided. The rail may be attached to the support column or steel tank. A painter's rail attached to the roof, pipe couplings with plugs in the roof or other attachments that provide complete access for painting of tank interior shall be furnished.

4.12 PIPING

A. GENERAL

1. Exterior of pipes exposed to stored water shall be coated with tank interior wet system. Exterior of pipes in the pedestal and base cone shall be coated with tank interior dry system.

B. INLET/OUTLET PIPING

1. Provide a 12 inch diameter standard weight steel inlet/outlet pipe that extends vertically from the base of the pedestal to the bottom of the tank. An expansion joint shall be provided in the vertical section of pipe. The expansion joint should be constructed to accommodate any differential movement caused by settlement or thermal expansion and contraction.
2. Inlet piping shall extend to the tank overflow elevation and be supported off the tank access tube by tank manufacturers recommendations. A steel gooseneck fitting shall be provided.

C. OVERFLOW

1. The overflow pipe shall be designed to carry the maximum design flow rate of 1,400 GPM. The steel overflow pipe will be 8 inch in diameter and shall have a minimum wall thickness of ¼". A suitable weir shall be provided with the crest at High Water Level (overflow elevation) and shall be designed to carry the full 1,400 GPM capacity. The overflow pipe shall extend down from the weir box through the tank, pedestal, and base cone. The overflow pipe shall penetrate the base cone wall as shown in the plans to provide the minimum required clearance for the overflow termination assembly. The point of discharge shall have a 90 degree elbow and be equipped with a stainless steel screened end and flap valve in accordance with Section 11150.

4.13 INTERIOR FLOOR

A. A concrete slab-on-grade shall be provided inside the base cone. The floor shall be a minimum of 6 inches thick, and reinforced with #4 bars at 12" o.c. each direction, at mid-depth of the slab. Isolation joints shall be provided at junctions with walls, columns, equipment, or piping foundations.
B. Control joints shall be spaced at a minimum 12 foot spacing and as required to prevent cracking of the floor slab.
C. Concrete slab shall be sloped at 2% to tank trench floor drain.
D. A concrete base and foundation for the riser pipes shall be designed by the Tank Manufacturer to support the base elbow and base tee for the inlet and outlet riser respectively.

4.14 PERSONNEL DOOR

A. A 36" by 80" access door with a flush threshold shall be located in the base of the pedestal cone. A step over threshold is not acceptable. The door shall be fabricated from steel plate with adequate stiffening and specifically designed for use with the tank. The access door will be equipped with handle, drip cover and dead bolt lock. Commercial hollow metal doors and frames are not acceptable.

4.15 IDENTIFICATION PLATE

A. A tank identification plate shall be mounted near the personnel door. The identification plate shall be corrosion resistant and contain the following information.

1. Tank Manufacturer
2. Manufacturer's project or file number
3. Tank capacity
4. Height to High Water Level
5. Date erected

4.16 GUARANTEE

A. The tank Manufacturer shall guarantee its work for a period of one year from the completion date defined in the contract documents to the extent that it will repair any defects caused by faulty design, workmanship or material furnished under the specifications. If Manufacturer is not advised of any defects within 30 days of end of guarantee period, guarantee shall be considered fulfilled and complete. Defects caused by damaging service conditions such as electrolytic, chemical, abrasive or other damaging service conditions are not covered by this guarantee.

B. All guarantees obtained by the tank Manufacturer from the manufacturer or installer of paint, equipment or accessories not manufactured by tank Manufacturer shall be obtained for the benefit of the Purchaser.

END OF SECTION

SECTION 16010
GENERAL ELECTRICAL PROVISIONS

PART 1- GENERAL

1.1 RELATED DOCUMENTS

A. The Contract Documents apply to this section.

1.2 SUMMARY

A. Provide necessary items for a complete installation of electrically operated equipment specified in specifications or shown on contract drawings.

B. Arrange equipment substantially as shown on the drawings. Make deviations only where necessary to avoid interference. Check equipment size against available space prior to shipment to avoid interference.

C. Material, equipment, and installation shall meet requirements of applicable codes and standards listed below. Electrical material and equipment shall bear the UL label except where UL does not label such types of material and equipment.

D. Reference to standards are referred to by abbreviation as follows:

1.	Certified Ballasts Mfg	CBM
2.	Electrical Testing Lab	ETL
3.	National Fire Protection Association	NFPA
4.	National Electrical Code (NFPA No. 70)	NEC
5.	Underwriters' Laboratories, Inc	UL
6.	National Electrical Manufacturers' Association	NEMA
7.	Institute of Electrical & Electronics Engineers, Inc	IEEE
8.	Insulated Power Cable Engineers Association	IPCEA
9.	National Electrical Safety Code	NESC
10.	Illuminating Engineering Society	IES
11.	Edison Electric Institute	EEI
12.	Electronic Industries Association	EIA
13.	American Concrete Institute	ACI
14.	American National Standards Institute	ANSI
15.	American Society for Testing and Materials	ASTM
16.	Virginia Statewide Building Code	VAS BC
17.	Association of Edison Illuminating Companies	AEIC

1.3 WARRANTY

A. This contractor will replace, without additional charge, any work or material which develops defects, except from ordinary wear and tear, within one year from date of final acceptance and inspection of the completed system and its' components. Extended warranty periods for specific equipment has been indicated in these specifications as required.

1.4 QUALITY ASSURANCE

A. The term "Electrical Contractor" shall mean the firm or corporation with a Class "A" License who is to provide, furnish, and install a complete electrical system as shown on the drawings and specified herein.

B. Trade names and catalog numbers used in these specifications shall designate quality and characteristics of the equipment and materials that are acceptable. All electrical equipment entering into the fabrication and erection of the work specified shall be in strict accordance with the specifications. Substitutions shall be considered by the Engineer provided the application for such substitution is made in writing giving complete pertinent data and specifications for the equipment offered in respect to the equipment specified. When substitutions are offered, they shall be submitted with a statement indicating the change in contract price, if any involved if the materials or equipment offered were accepted.

C. Legends, notes, schedules, and dimensioned details shown on the drawings shall be carefully followed. All electrical equipment shall be installed so as not to interfere with the work of other trades. Electrical Contractor shall cooperate with the General Contractor and other subcontractors in advance of the construction to correlate the work and avoid interference with work of other trades. Where electrical work is installed that interferes with the work of other trades without notice to the General Contractor of such interference, the Electrical Contractor shall, at his own expense, reinstall or alter same including damage to the work of other trades, in compliance with the general intent of the drawings and these specifications.

D. Electrical drawings as presented are diagrammatic only and are intended to show the approximate location of the electrical work as related to the structure unless specifically dimensioned. The correct location and relation to the electrical work to the structure when required shall be defined by reference to the working drawings, or to be determined by actual field requirements. Electrical Contractor shall maintain a record of field changes and shall furnish the Engineer with "RECORD" wiring diagrams to show any change from the Engineer's original design. Record drawings shall indicate circuit-numbering system for control and instrumentation wiring.

E. All electrical work, equipment, and materials provided under this contract shall be in strict accordance with the requirements of the applicable regulations of the Virginia Uniform Statewide Building Code, National Electrical Code and the wiring rules and requirements of Virginia Power Company. The Electrical Contractor shall obtain all permits required and pay the fees so levied and file a certificate of inspection by the proper authorities having jurisdiction with the Engineer. The electrical subcontractor shall pay for all temporary power used during the course of construction. All charges for electrical energy passing through the owner's electrical service connection prior to placing the system in operation shall be at the contractor's expense.

F. The Electrical Contractor shall use all new materials unless otherwise noted. Contractor shall comply with accepted industry standards. All fixtures and equipment shall be Underwriters' Laboratories tested, rated, and so labeled. All work shall be executed in a workmanlike manner so as to present a neat appearance. (See NECA manual "Standard of Installation" for approved methods and workmanship.) All equipment shall be left complete and in good operating order. All of the Electrical Systems shall be installed by trained mechanics who are certified in their respective

trades under the supervision of an Electrical Contractor licensed to install the work in its entirety as covered by the drawings and these specifications.

PART 2- PRODUCTS

2.1 MATERIALS

A. Nameplates

1. General: Furnish and mount on each panelboard, starter, safety switch, remote control, push-button station, and all similar controls, a nameplate descriptive of the equipment or equipment controlled. Submit complete list of nameplates with wording and location.
2. Constructed from black background phenolic material laminated with a clear main front core to provide for reverse engraving. Reverse engraved letters shall be 3/8-inch high minimum and paint filled white. Mounting holes at each end to accept stainless steel screws and an adhesive type fastener.

B. Supporting Material

1. Complete with hangers, connectors, bolts, clamps, and necessary accessories to make a complete installation. Supporting material shall be galvanized, painted, or otherwise suitably finished for the installed environment.

C. Electrical Cabinetry

1. Furnished with provisions for front access only unless otherwise noted.

PART 3- EXECUTION

3.1 DELIVERY, STORAGE AND HANDLING

A. Deliver materials to job site in the manufacturer's packaging or crate.

B. Store materials off ground and under cover to prevent damage, deterioration, or contamination.

C. Promptly remove from the site any materials which show evidence of damage, deterioration, or contamination.

3.2 INSTALLATION

A. Testing and placing in Service:

1. Furnish all necessary instruments and equipment and provide testing to confirm proper operation of electrical systems and equipment. Submit four copies of test results.
2. Test results shall include: service voltage at no load, service voltage at maximum load, voltage drop when largest motor is started, maximum load on each feeder, total service maximum load, ground resistance of main service ground.

3. Instruct Owner's personnel in proper operation and maintenance of equipment.

B. Provide equipment connections complete with motor controls, switches, wiring devices, control devices, protective devices, wiring, and other accessories. All equipment and connections shall be as recommended by the manufacturer or as indicated on drawings and specified in specifications.

C. Equipment connections for equipment furnished by the Owner or under separate contract shall be complete as specified in the above paragraph. Refer to other sections of these specifications and drawings for definition of extent of electrical switchgear, equipment, materials, and wiring to be provided by the respective sub-contractors.

D. Install control and alarm wiring for all equipment, mechanical and electrical, in accordance with Division 16 specification sections. Before installing control circuits, ensure that controls and wiring diagrams are in accordance with those furnished with the equipment. Make any changes required due to the different equipment, more up-to-date controls, or safety devices, so that the equipment operates as required and specified. Control voltage shall not exceed 132 volts unless indicated otherwise on the drawings.

E. When equipment is supplied with electrical requirements other than those specified or shown on the drawings, associated electrical devices and circuitry of the correct sizes and ratings shall be provided.

F. CLEAN UP

1. Remove all labels, shipping documents, wrapping materials, etc., where they are not a part of the finished installation. Nameplates are to be cleaned and left in a legible condition. All finger marks, surplus wire-pulling compound, sealers, and construction debris are to be removed from the surface.
2. Tool marks and scratches will be touched-up by painting. However, excessive amounts of touch-up will warrant painting of the entire surface by a qualified contractor with the cost of painting to be borne by the electrical contract.

END OF SECTION

SECTION 16110
RACEWAYS

PART 1- GENERAL

1.1 RELATED DOCUMENTS

A. The Contract Documents apply to this section.

1.2 SUMMARY

A. Furnish all labor, materials, tools, equipment, and services and although such work is not specifically indicated, furnish and install all supplementary or miscellaneous items, appurtenances and devices incidental to or necessary for a complete installation.

1.3 SUBMITTALS

A. The Contractor shall submit all submittal data in a timely manner in accordance with the approved submittals schedule.

B. Manufacturer's Data

1. Submit data on each device to be installed.
2. Submittals for each manufactured item shall be Manufacturer's descriptive literature (equipment specification), equipment drawings, diagrams, performance and characteristic curves and catalog cuts. The submittal shall include the Manufacturer's name, trade name, catalog model or number, nameplate data, dimensions, physical layout, capacity, specification reference and all other information necessary to establish contract compliance.
3. Complete and detailed system schematic drawings showing all components and the electrical point-to-point connections for each system.
4. The submittal shall be organized in a logical manner.

C. Submittals for Closeout

1. Submit in accordance with Contract Closeout Requirements.
2. Maintenance Data: Identify equipment maintenance requirements, servicing cycles, and local spare part source.

PART 2- PRODUCTS

2.1 Rigid steel conduit: low carbon, hot-dipped galvanized inside and outside, with threaded ends, minimum size 3/4 inch. Threaded fittings, cast iron or alloy steel, galvanized.

2.2 PVC coated rigid steel conduit: Rigid steel conduit with a factory-applied, 20 mil PVC coating bonded to the exterior of the conduit and conduit fittings.

2.3 PVC Schedule-80 conduit.

2.4 Liquidtight flexible metal conduit: "Sealtite" or equal.

2.5 Explosion proof flexible metal conduit: Crouse-Hinds series EC.

2.6 Sealing fittings for hazardous locations: Crouse-Hinds EYS, EZD, EZS or equal.

2.7 Thruwall sealing fittings: Type WSK by O-Z Electrical Manufacturing Company.

2.8 Insulated bushings: Type B, as applicable, by O-Z or Series BU500, as applicable, by Steel City.

2.9 Pulling in wire: Provide 5/32-inch polyethylene rope.

2.10 Thread lubricant/sealant shall be Crouse-Hinds Type STL except, when required on joints for heat producing elements such as lighting fixtures, it shall be Crouse-Hinds Type HTL.

PART 3- EXECUTION

3.1 INSTALLATION

A. Install all conduit as required for this contract per NEC, by type and use unless noted otherwise within this specification.

B. Space groups of conduits uniformly. For bends and offsets, use an approved bending machine.

C. Cut all conduits with an approved cutting machine and ream after threading to remove all burrs.

D. Fasten conduit securely to outlets, junctions and pullboxes to ensure firm electrical contact. Join conduit with approved couplings. No running threads will be allowed.

E. Provide insulated bushings and double locknuts on conduits entering or leaving sheet metal outlet, junction, or pullboxes, and cabinets.

F. Avoid condensation pockets in installations. Keep conduit, fittings and boxes free from foreign matter before, during and after installation.

G. Not more than one exposed conduit shall be run down to each exposed wall switch or outlet box.

H. Use sealing fittings where conduits pass from hazardous areas to areas of normal atmosphere.

I. Use thruwall sealing fittings where conduits enter buildings or vaults below finished grade.

J. Conduits less than one inch may be installed in concrete but shall not cross each other. Installation of larger conduits in concrete must be approved by the Engineer.

K. Use watertight joints with buried and concrete encased conduit. All buried conduits outside of buildings shall have a minimum of 24 inches of cover. Metal conduits buried in earth shall be painted (two coats) with heavy asphaltum paint.

L. Install exposed runs of conduit either parallel or perpendicular to walls, structural members or intersections of vertical planes and ceilings. Provide right angle turns

consisting of fittings or symmetrical bends. Support conduits within 1 foot of all changes in direction.

M. Supports shall include wall brackets, trapeze hangers, strap hangers, or pipe straps secured to hollow masonry with toggle bolts, to brick and concrete with expansion bolts, to metal surfaces with machine screws.

N. Wooden plugs inserted in masonry, and the use of nails as fastening media, are prohibited.

O. Install empty conduit for future use as indicated on the drawings. Conduit shall be complete with pull cord, junction and outlet boxes.

P. Conduit shall not be supported from metal roof deck.

Q. Conduit shall not penetrate concrete bases designed for vibration isolation.

R. Except as noted in the following, install rigid steel conduit, galvanized as required by location.

1. Non-Hazardous Locations

   a. Install liquidtight (jacketed) flexible metal conduit for connections to motors and other equipment subject to vibration. The maximum allowable length is 4-Feet. Rigid Steel Conduit, galvanized by location, shall be installed and secured within 3-Feet of the vibrating equipment. Liquidtight flexible metal conduit shall only be used for the extension from the secured conduit to the vibrating equipment.
   b. Install galvanized Rigid Steel conduit where conduit is exposed, subject to damage or above grade.
   c. Install Schedule-80 PVC rigid conduit or galvanized rigid steel conduit where conduit is buried or under vehicle drive paths and parking lots. Direct buried PVC conduit shall be encased with red-dye colored concrete with support chairs, tie-downs and rebar anchors.

2. Hazardous Locations

   a. Install explosion proof liquidtight (jacketed) flexible metal conduit for connections to motors and other equipment subject to vibration. The maximum allowable length is 4-Feet. PVC coated Rigid Steel Conduit shall be installed and secured within 3-Feet of the vibrating equipment. Explosion proof liquidtight flexible metal conduit shall only be used for the extension from the secured conduit to the vibrating equipment.
   b. Install PVC coated rigid steel conduit for all equipment not subject to vibration.
   c. Install gas seal-offs sealing fittings and fill with sealing material where conduits pass from hazardous areas to areas of normal atmosphere and at other locations as required by Articles 500 and 501 of the National Electric code.

S. Provide separate conduits for AC and DC wiring, for signal wiring 50 volts or less and for signal wiring over 50 volts, per NEC.

T. Provide cast iron straps with clamp boxes for exposed conduit runs. The clamp backs shall hold the conduit off the surface.

U. Exposed threads, including those on conduits to be encased in concrete or masonry, shall be painted with a heavy coat of gray marine enamel, neatly brushed on.

END OF SECTION

SECTION 16120
WIRING

PART 1- GENERAL

1.1 RELATED DOCUMENTS

A. The Contract Documents apply to this section.

1.2 SUMMARY

A. Furnish all labor, materials, tools, equipment, and services and although such work is not specifically indicated, furnish and install all supplementary or miscellaneous items, appurtenances and devices incidental to or necessary for a complete installation.

1.3 SUBMITTALS

A. The Contractor shall submit all submittal data in a timely manner in accordance with the approved submittals schedule.

B. Manufacturer's Data

1. Submit data on each type of wire to be installed.
2. Submittals for each manufactured item shall be Manufacturer's descriptive literature (equipment specification), equipment drawings, diagrams, performance and characteristic curves and catalog cuts. The submittal shall include the Manufacturer's name, trade name, catalog model or number, nameplate data, dimensions, physical layout, capacity, specification reference and all other information necessary to establish contract compliance.
3. The submittal shall be organized in a logical manner.

C. Submittals for Closeout

1. Submit in accordance with Contract Closeout Requirements.
2. Maintenance Data: Identify equipment maintenance requirements, servicing cycles, and local spare part source.

1.4 QUALITY ASSURANCE

A. Conductor Coding:

1. Color code insulated grounding conductors in accordance with NEC 250-119.
2. Color code current carrying conductors, except control and instrumentation conductors, as scheduled on the drawings.

a. No. 10 conductors shall have continuous insulation color.
b. Color code conductors larger than No. 10 which do not have continuous insulation color by application of at least two laps of colored tape on each conductor at all points of access.

3. Number code for all control and instrumentation wiring at all points of access. The numbering systems shall be non-duplicating. The numbering code system shall be submitted to the Engineer for approval prior to implementation. The contractor shall record all number Codes on a set of "Record" electrical drawings.
4. The wire identifying labels shall be PVC slip-on heat embossed sleeves, properly fitted to the wire diameter or heat-shrink style. The labels shall be as manufactured by Brady Co or equal.

B. Conductor sizes are based on copper unless otherwise indicated on drawings.

PART 2- PRODUCTS

2.1 MATERIALS

A. Power and Control Conductors:

1. Conductors inside buildings shall have moisture resistant, flame retarding, thermoplastic insulation, Type "THW" or "THWN," rated for 600 volts unless otherwise indicated. (75° C. - rated for wet or dry location.)
2. Conductors shall be soft annealed copper.
3. Install power wire, VAC signal wire, VDC signal wire and analog shielded cables in separate conduits.
4. Provide No. 12 conductors, unless otherwise indicated.
   a. Control conductors shall be No. 14 minimum for NEC Class I and No. 16 for NEC Class II.
5. Conductors No. 8 AWG and larger shall be stranded.

B. Low Signal Level Instrumentation Cables

1. Single pair cable shall be provided and installed between each field instrumentation device and the main instrumentation panel. This cable is to be installed in a conduit system, as specified under Section 16110 - Raceways. The cable configuration is to be as required by the supplier of the instrumentation, which in most cases will be a single twisted, shielded pair. The same is true for the digital status and alarm (contact closure) points which transmit to the instrumentation system.
2. All single pair low level instrumentation cable is to be stranded, twisted, tinned, 18 AWG, 300 V PVC insulated, overall foil shielded with a tinned copper drain wire, and an overall PVC jacket.
3. As required, some devices and systems will require multiple pair or multiple conductor cables. Such cables will meet the above requirements with an overall 100% coverage foil shield and an overall PVC jacket.
4. All wire lists and run sheets shall become a portion of the Project Documentation Package and also included on the record drawings required elsewhere in this Project Manual. Splicing of cables is not acceptable.

PART 3- EXECUTION

3.1 INSTALLATION

A. Install wiring in conduit unless otherwise shown.

B. Install splice-free conductors within ducts, conduits or earth.

C. Connect No. 10 and smaller wires with constant pressure expandable spring type connectors, "Scotchlok" by 3M or B-Cap by Buchanan.

D. Connect No. 8 and larger wires with compression connectors or splices as manufactured by Burndy, or T & B.

E. Insulate splicing connectors to at least 200 percent of wire insulation. Use pre-stretched tubing connector insulators, 3/M PST for No. 2 and larger conductors.

F. Use terminal strips to interconnect and splice control, instrumentation, and communication cables. Terminal lugs #10 and smaller to be compression type; #10 to #1 AWG, bolted or compression type; and #1 AWG and larger, hydraulic compression type, such as Mode 6, Thomas & Betts or Burndy.

G. Pull conductors using recognized methods and equipment leaving ample Lengths of wire at junctions for connections.
   1. Use soapstone or UL approved compound as required to facilitate pulling.
   2. Complete and cleanout conduit system before pulling wire.

H. Form and tie all wiring in panelboards and control panels.
   1. A maximum of 24 current carrying conductors will be permitted in a single raceway unless specifically indicated otherwise on the drawings. Derate in accordance with NEC.

I. Two or three single phase circuits may be installed in one conduit using conductors of different phases and a common neutral.

J. Install identification labels in all junction boxes and terminal points so as to be clearly visible.

K. Install all instrumentation wiring in accordance with the recommendations of the instrumentation equipment supplier using low signal level instrumentation cables.

L. The instrumentation equipment supplier shall recommend wire sizing for signal conductors.

M. Make cable runs continuous without intermediate splicing whenever possible.

   1. Use terminal strips in above-grade exterior or in all interior locations to interconnect and splice instrumentation cables.
   2. Install insulated, spade-type wire lugs on all conductors at all screw-type terminal connections.

N. Make final connections to instrumentation equipment.

END OF SECTION

SECTION 16131
PULL AND JUNCTION BOXES

PART 1- GENERAL

1.1 RELATED DOCUMENTS

A. The Contract Documents apply to this section.

1.2 SUMMARY

A. Furnish all labor, materials, tools, equipment, and services and although such work is not specifically indicated, furnish and install all supplementary or miscellaneous items, appurtenances and devices incidental to or necessary for a complete installation.

B. Install pull and junction boxes where shown on the drawings, and where required for changes in direction, at junction points, and to facilitate wire pulling. Furnish box sizes in accordance with NEC unless larger boxes are indicated.

C. Conduit bodies may be used on exposed work in lieu of boxes.

1.3 SUBMITTALS

A. The Contractor shall submit all submittal data in a timely manner in accordance with the approved submittals schedule.

B. Manufacturer's Data

1. Submit data on each type of pull box or junction box to be installed.
2. Submittals for each manufactured item shall be Manufacturer's descriptive literature (equipment specification), equipment drawings, diagrams, performance and characteristic curves and catalog cuts. The submittal shall include the Manufacturer's name, trade name, catalog model or number, nameplate data, dimensions, physical layout, capacity, specification reference and all other information necessary to establish contract compliance.
3. The submittal shall be organized in a logical manner.

C. Submittals for Closeout

1. Submit in accordance with Contract Closeout Requirements.
2. Maintenance Data: Identify equipment maintenance requirements, servicing cycles, and local spare part source.

PART 2- PRODUCTS

2.1 MATERIALS

A. Provide steel boxes and removable covers of code gage, hot-rolled sheet steel, hot-dipped galvanized inside and outside, for above ground work above the level of the pump room floor. Furnish weatherproof boxes when installed above ground outside.

B. Provide cast aluminum alloy boxes (Millark or Crouse-Hinds) or hot-dipped galvanized inside and outside for wet well, dry well, and wet locations. Furnish removable covers with gaskets and stainless steel, brass, or bronze screws.

C. Provide concrete boxes for underground work unless otherwise indicated in the drawings. Furnish stainless steel frames and cover with cover attached to frame with hexagon head, brass or bronze cap screws, 3/8 inches in diameter. Provide rubber gasket for sealing between cover and frame. Paint cover with two coats of heavy asphaltum as required.

PART 3- EXECUTION

3.1 Locate boxes as shown on drawings. Minor adjustments shall be made as necessary to avoid other utilities and other restrictions.

END OF SECTION

SECTION 16132
PILOT DEVICES

PART 1- GENERAL

1.1 RELATED DOCUMENTS

A. The contract documents apply to this section.

B. References

1. National Electrical Manufacturers Association (NEMA) Publications
2. ICS 1 General Standards for Industrial Controls and Systems
3. ICS 2 Standards for Industrial Control Devices, Controllers, and Assemblies
4. ICS 6 Enclosures for Industrial Controls and Systems

C. Instrument Society of America (ISA) Publications

1. S5.1 Instrumentation Symbols and Identification
2. S51.1 Standard Process Instrumentation Terminology

1.2 SUMMARY

A. Furnish all labor, materials, tools, equipment, and services and although such work is not specifically indicated, furnish and install all supplementary or miscellaneous items, appurtenances and devices incidental to or necessary for a complete installation.

1.3 SUBMITTALS

A. The Contractor shall submit all submittal data in a timely manner in accordance with the approved submittals schedule.

B. Manufacturer's Data

1. Submit data on each type of device to be installed.
2. Submittals for each manufactured item shall be Manufacturer's descriptive literature (equipment specification), equipment drawings, diagrams, performance and characteristic curves and catalog cuts. The submittal shall include the Manufacturer's name, trade name, catalog model or number, nameplate data, dimensions, physical layout, capacity, specification reference and all other information necessary to establish contract compliance.
3. Complete and detailed system schematic drawings showing all components and the electrical point-to-point connections for each system.
4. The submittal shall be organized in a logical manner.

C. Submittals for Closeout

1. Submit in accordance with Contract Closeout Requirements.
2. Maintenance Data: Identify equipment maintenance requirements, servicing cycles, and local spare part source.

1.4 WARRANTY

A. Each type of device covered under this section to be used for this project shall be installed according to the manufacturer's installation instructions and recommendations in order to maintain the manufacturer's complete warranty.

PART 2- PRODUCTS

2.1 MATERIALS

A. General: Pilot devices shall be corrosion resistant (NEMA 4, 4X, and 13) heavy-duty type, rated 600 volts. Manufacturer shall be Allen Bradley 800H (30.5mm) Series or approved equal.

B. Selector switches shall be single or multiple block, rotary type and with maintained positions.

C. Pushbutton switches shall be multiple contact, single or multiple (as required) block, spring return type with each block having one normally open and one normally closed contact.

D. Standard Indicating lights and push-to-test indicating lights shall be the transformer type, 120 volt primary, 6 volt secondary.

PART 3- EXECUTION

3.1 INSTALLATION

A. Install all devices as required to provide for a complete operating system.

B. Install front-of-panel mounted devices in control panels between 3 feet - 2 inches and 5 feet - 6 inches above finished floor.

END OF SECTION

SECTION 16133
POSITION SWITCHES

PART 1- GENERAL

1.1 RELATED DOCUMENTS

A. The contract documents apply to this section.

B. References

1. National Electrical Manufacturers Association (NEMA) Publications
2. ICS 1 General Standards for Industrial Controls and Systems
3. ICS 2 Standards for Industrial Control Devices, Controllers, and Assemblies
4. ICS 6 Enclosures for Industrial Controls and Systems

C. Instrument Society of America (ISA) Publications

1. S5.1 Instrumentation Symbols and Identification
2. S51.1 Standard Process Instrumentation Terminology

1.2 SUMMARY

A. Furnish all labor, materials, tools, equipment, and services and although such work is not specifically indicated, furnish and install all supplementary or miscellaneous items, appurtenances and devices incidental to or necessary for a complete installation.

1.3 SUBMITTALS

A. The Contractor shall submit all submittal data in a timely manner in accordance with the approved submittals schedule.

B. Manufacturer's Data

1. Submit data on each type of device to be installed.
2. Submittals for each manufactured item shall be Manufacturer's descriptive literature (equipment specification), equipment drawings, diagrams, performance and characteristic curves and catalog cuts. The submittal shall include the Manufacturer's name, trade name, catalog model or number, nameplate data, dimensions, physical layout, capacity, specification reference and all other information necessary to establish contract compliance.
3. Complete and detailed system schematic drawings showing all components and the electrical point-to-point connections for each system.
4. The submittal shall be organized in a logical manner.

C. Submittals for Closeout

1. Submit in accordance with Contract Closeout Requirements.
2. Maintenance Data: Identify equipment maintenance requirements, servicing cycles, and local spare part source.

1.4 WARRANTY

A. Each type of device covered under this section to be used for this project shall be installed according to the manufacturer's installation instructions and recommendations in order to maintain the manufacturer's complete warranty.

PART 2- PRODUCTS

2.1 MATERIALS

A. Limit Position switches, general service shall have the following features:

1. Contacts

   a. DPDT
   b. Rating: 10 Amp, 120 Volts

2. Enclosure:

   a. Non-Hazardous Areas - NEMA-4 designed for watertight applications only.
   b. Hazardous Areas - Explosion proof construction as required by location.

3. Manufacturer and Type of limit switches shall be Allen-Bradley, Bulletin 802X Watertight or approved equal.

B. Magnetic, inductive or capacitive proximity switches are not acceptable.

C. Float Switches

1. Wet Well and Headworks Areas

   a. Contacts:
      1) Normally Open – Closes on level rise
      2) Rating: 10 Amp, 120 Volts
   b. Suitable for use in waste water
   c. Class 1 Division 1 rated as defined in the National Electric Code.
   d. Integral float/cable assembly
   e. No spliced wiring shall be used in the wet well High Level Alarm to avoid corrosion.

2. Chemical Tank

   a. Contacts:
      1) Normally Open – Closes on level rise
      2) Rating: 10 Amp, 120 Volts
   b. Suitable for use in the specified chemical
   c. Integral float/cable assembly

PART 3- EXECUTION

3.1 INSTALLATION

A. Coordinate selection and installation of position switches with associated equipment manufacturers.

END OF SECTION

SECTION 16134
SWITCH AND OUTLET BOXES

PART 1- GENERAL

1.1 RELATED DOCUMENTS

A. The contract documents apply to this section.

1.2 SUMMARY

A. Furnish all labor, materials, tools, equipment, and services and although such work is not specifically indicated, furnish and install all supplementary or miscellaneous items, appurtenances and devices incidental to or necessary for a complete installation.

1.3 SUBMITTALS

A. The Contractor shall submit all submittal data in a timely manner in accordance with the approved submittals schedule.

B. Manufacturer's Data

1. Submit data on each type of device to be installed.
2. Submittals for each manufactured item shall be Manufacturer's descriptive literature (equipment specification), equipment drawings, diagrams, performance and characteristic curves and catalog cuts. The submittal shall include the Manufacturer's name, trade name, catalog model or number, nameplate data, dimensions, physical layout, capacity, specification reference and all other information necessary to establish contract compliance.
3. The submittal shall be organized in a logical manner.

C. Submittals for Closeout

1. Submit in accordance with Contract Closeout Requirements.
2. Maintenance Data: Identify equipment maintenance requirements, servicing cycles, and local spare part source.

1.4 WARRANTY

A. Each type of device covered under this section to be used for this project shall be installed according to the manufacturer's installation instructions and recommendations in order to maintain the manufacturer's complete warranty.

PART 2- PRODUCTS

2.1 MATERIALS

A. Provide boxes, complete with cover or device plate for switches, receptacles, or other similar devices, or where required for pulling or joining branch circuit wiring.

B. Conduit bodies may be used on exposed conduit work instead of outlet boxes.

C. Use sheet steel boxes, zinc coated or cadmium plated, for concealed interior work, or exposed interior work at least 8 feet above finished floor levels.

D. Use cast boxes, cast aluminum alloy, or zinc-cadmium finish malleable iron, for exposed interior work within 8 feet above finished floor levels, and for exposed or concealed work in wet, damp or exterior locations. Cast boxes shall be Series FD by Crouse-Hinds or Appleton.

E. Wall box sizes (minimum) shall be 4 inches wide, 4 inches long and 2 1/8 inches deep where wall construction permits. Where wall construction dictates width may be reduced to 2 1/8 inches, or depth to 1-1/2 inches.

F. Fixture outlets (minimum) 4 inches octagonal (4 11/16 inches x 2-1/2 inches deep where required to accommodate larger conduit or larger number of wires).

G. Gang boxes shall be one piece (minimum) 2-1/8 inches deep.

H. Provide lighting fixture outlet boxes, with suitable studs and supports for carrying the weight of the fixture, where fixtures are to be mounted on the box. Increase box depth, as required, for additional wires and conduits.

I. Provide cover or device plates for outlet boxes as follows unless otherwise noted:

1. Finished areas - Flush type stainless steel, satin finish fastened with stainless steel recessed machine screws.
2. Unfinished areas - Zinc coated sheet metal, aluminum or cast metal as appropriate for type of box.
3. Exterior areas - Copper free aluminum with gray, powder epoxy finish, gasketed, weatherproof, Crouse-Hinds WLRD for duplex receptacles and WLRS for single receptacles.

J. Provide covers and gaskets with conduit bodies, of a design suitable for the application. Provide watertight conduit bodies in damp and wet locations. Conduit bodies shall be cast ferrous alloy, galvanized, as manufactured by Crouse-Hinds, Pyle National, Killark, or Appleton.

PART 3- EXECUTION

3.1 INSTALLATION

A. Flush mount boxes in finished walls. 3/16 inch maximum gaps allowed for noncombustible walls.

B. Adjust location of outlets in masonry to occur in the nearest joint to the height specified.

C. Support all boxes to maintain alignment and rigidity.

D. Clean boxes of all foreign matter prior to installation of wiring or devices..

END OF SECTION

SECTION 16470
GENERAL LIGHTING AND DISTRIBUTION PANELBOARDS

PART 1- GENERAL

1.1 SECTION INCLUDES

A. Furnish and install panelboard(s) as specified herein and where shown on the associated schedules and drawings.

1.2 REFERENCES

A. The panelboard(s) and circuit breaker(s) referenced herein are designed and manufactured according to the latest revision of the following specifications.

1. NEMA PB 1 - Panelboards
2. NEMA PB 1.1 - Instructions for Safe Installation, Operation and Maintenance of Panelboards Rated 600 Volts or Less.
3. NEMA AB 1 - Molded Case Circuit Breakers
4. UL 50 - Enclosures for Electrical Equipment
5. UL 67 – Panelboards
6. UL 489 - Molded-Case Circuit Breakers and Circuit Breaker Enclosures
7. CSA Standard C22.2 No. 29-M1989 - Panelboards and Enclosed Panelboards
8. CSA Standard C22.2 No. 5-M91 - Molded Case Circuit Breakers
9. Federal Specification W-P-115C - Type I Class 1
10. Federal Specification W-C-375B/Gen - Circuit Breakers, Molded Case, Branch Circuit And Service.
11. NFPA 70 - National Electrical Code (NEC)
12. ASTM - American Society of Testing Materials

1.3 SUBMITTAL AND RECORD DOCUMENTATION

A. Approval documents shall include drawings. Drawings shall contain overall panelboard dimensions, interior mounting dimensions, and wiring gutter dimensions. The location of the main, branches, and solid neutral shall be clearly shown. In addition, the drawing shall illustrate one line diagrams with applicable voltage systems.

1.4 QUALIFICATIONS

A. Company specializing in manufacturing of panelboard products with a minimum of fifty (50) years documented experience.

B. Panelboards shall be manufactured in accordance with standards listed Article 1.02 - REFERENCES.

1.5 DELIVERY, STORAGE, AND HANDLING

A. Inspect and report concealed damage to carrier within their required time period.

B. Handle carefully to avoid damage to panelboard internal components, enclosure, and finish.

C. Store in a clean, dry environment. Maintain factory packaging and, if required, provide an additional heavy canvas or heavy plastic cover to protect enclosure(s) from dirt, water, construction debris, and traffic.

1.6 OPERATIONS AND MAINTENANCE MATERIALS

A. Manufacturer shall provide installation instructions and NEMA Standards Publication PB 1.1 - Instructions for Safe Installation, Operation and Maintenance of Panelboards Rated 600 Volts or Less.

1.7 WARRANTY

A. Manufacturer shall warrant specified equipment free from defects in materials and workmanship for the lesser of one (1) year from the date of installation or eighteen (18) months from the date of purchase.

PART 2- PRODUCTS

2.1 MANUFACTURERS

A. Shall be Square D Company NQOD – Class1630 or approved equal.

B. Substitutions must be submitted in writing three weeks prior to original bid date with supporting documentation demonstrating that the alternate manufacturer meets all aspects of the specification herein.

2.2 LIGHTING AND APPLIANCE PANELBOARD TYPE

A. Interior

1. Shall be for 240 Vac/48 Vdc maximum. Continuous main current ratings, as indicated on associated schedules and drawings, not to exceed 600 amperes maximum.
2. Short circuit current rating shall be greater than or equal to that which is deliverable to the panelboard. The contactor shall verify the required AIC rating and supply the properly rated panelboard
3. Provide one (1) continuous bus bar per phase. Each bus bar shall have sequentially phased branch circuit connectors suitable for plug-on or bolt-on branch circuit breakers. The bussing shall be fully rated. Panelboard bus current ratings shall be determined by heat-rise tests conducted in accordance with UL 67. Bussing rated 100-400 amperes shall be plated copper. Bussing rated for 600 amperes shall be plated copper as standard construction. Bus bar plating shall run the entire length of the bus bar. Panelboard's shall be suitable for use as Service Equipment as indicated on the schedules and drawings.
4. All current-carrying parts shall be insulated from ground and phase-to-phase by high dielectric strength thermoplastic.
5. A solidly bonded copper equipment ground bar shall be provided. An additional copper isolated/insulated ground bar shall also be provided.
6. Split solid neutral shall be plated and located in the mains compartment up to 225 amperes so all incoming neutral cable may be of the same length. UL

Listed panelboards with 200% rated solid neutral shall be plated copper for non-linear load applications. Panelboards shall be marked for non-linear load applications.

7. Interior trim shall be of dead-front construction to shield user from energized parts. Dead-front trim shall have pre-formed twistouts covering unused mounting space.
8. Nameplates shall contain system information and catalog number or factory order number. Interior wiring diagram, neutral wiring diagram, UL Listed label and short circuit current rating shall be displayed on the interior or in a booklet format.
9. Interiors shall be field convertible for top or bottom incoming feed. Main circuit breakers in 100A interiors shall be horizontally mounted. Main circuit breakers over 100A shall be vertically mounted. Sub-feed circuit breakers shall be vertically mounted. Main lug interiors up to 400 amperes shall be field convertible to main breaker. Interior leveling provisions shall be provided for flush mounted applications.

B. Main Circuit Breaker

1. Main circuit breakers shall have an over center, trip-free, toggle mechanism which will provide quick-make, quick-break contact action. Circuit breakers shall have a permanent trip unit with thermal and magnetic trip elements in each pole. Each thermal element shall be true rms sensing and be factory calibrated to operate in a 40° C ambient environment. Thermal elements shall be ambient compensating above 40° C.
2. Two and three-pole circuit breakers shall have common tripping of all poles. Circuit breakers frame sizes above 100 amperes shall have a single magnetic trip adjustment located on the front of the circuit breaker that allows the user to simultaneously select the desired trip level of all poles. Circuit breakers shall have a push-to-trip button for maintenance and testing purposes.
3. Breaker handle and faceplate shall indicate rated ampacity. Standard construction circuit breakers shall be UL Listed for reverse connection without restrictive line or load markings.
4. Circuit breaker escutcheon shall have international I/O markings, in addition to standard ON/OFF markings. Circuit breaker handle accessories shall provide provisions for locking handle in the ON or OFF position.
5. Lugs shall be UL Listed to accept solid or stranded copper and aluminum conductors. Lugs shall be suitable for 90° C rated wire, sized according to the 75° C temperature rating per NEC Table 310-16. Lug body shall be bolted in place; snap-in designs are not acceptable.
6. The circuit breakers shall be UL Listed for use with the following accessories: Shunt Trip, Under Voltage Trip, Ground Fault Shunt Trip, Auxiliary Switch, Alarm Switch, Mechanical Lug Kits, and Compression Lug Kits.

C. Branch Circuit Breakers

1. Circuit breakers shall be UL Listed with amperage ratings, interrupting ratings, and number of poles as indicated on the associated [schedules] [drawings].
2. Molded case branch circuit breakers shall have [bolt-on] [plug-on] type bus connectors.

3. Circuit breakers shall have an over center toggle mechanism which will provide quick-make, quick-break contact action. Circuit breakers shall have thermal and magnetic trip elements in each pole. Two- and three-pole circuit breakers shall have common tripping of all poles.
4. There shall be two forms of visible trip indication. The breaker handle shall reside in a position between ON and OFF. In addition, there shall be a red VISI-TRIP® indicator appearing in the clear window of the circuit breaker housing.
5. The exposed faceplates of all branch circuit breakers shall be flush with one another.
6. Lugs shall be UL Listed to accept solid or stranded copper and aluminum conductors. Lugs shall be suitable for 90° C rated wire, sized according to the 75° C temperature rating per NEC Table 310-16.
7. Breakers shall be UL Listed for use with the following factory installed accessories: Shunt Trip, Auxiliary Switch, and Alarm Switch.

D. Enclosures

1. Type 1 Boxes

   a. Boxes shall be galvanized steel constructed in accordance with UL 50 requirements. Galvannealed steel will not be acceptable.
   b. Boxes shall have removable endwalls with knockouts located on one end. Boxes shall have welded interior mounting studs. Interior mounting brackets are not required.

2. Type 1 Fronts

   a. Front shall meet strength and rigidity requirements per UL 50 standards. Front shall have ANSI 49 gray enamel electrodeposited over cleaned phosphatized steel.
   b. Fronts shall be hinged 1-piece with door. Mounting shall be as indicated on associated schedules and drawings.
   c. Panelboards shall have MONO-FLAT fronts with concealed door hinges and mounted with trim screws. Front shall not be removable with the door locked. Doors on front shall have rounded corners and edges shall be free of burrs.
   d. Front shall have cylindrical tumbler type lock with catch and spring-loaded stainless steel door pull. All lock assemblies shall be keyed alike. One (1) key shall be provided with each lock. A clear plastic directory cardholder shall be mounted on the inside of door.

3. Type 3R, 5, and 12

   a. Enclosures shall be constructed in accordance with UL 50 requirements. Enclosures shall be painted with ANSI 49 gray enamel electrodeposited over cleaned phosphatized steel.
   b. All doors shall be gasketed and equipped with a tumbler type vault lock and two (2) additional quarter turn fasteners on enclosures 59 inches or more in height. All lock assemblies shall be keyed alike.

One (1) key shall be provided with each lock. A clear plastic directory cardholder shall be mounted on the inside of door.

c. Maximum enclosure dimensions shall not exceed 21" wide and 6.5" deep.

PART 3- EXECUTION

3.1 INSTALLATION

A. Install panelboards in accordance with manufacturer's written instructions, NEMA PB 1.1 and NEC standards.

3.2 FIELD QUALITY CONTROL

A. Inspect complete installation for physical damage, proper alignment, anchorage, and grounding.

B. Measure steady state load currents at each panelboard feeder; rearrange circuits in the panelboard to balance the phase loads within 20% of each other. Maintain proper phasing for multi-wire branch circuits.

C. Check tightness of bolted connections and circuit breaker connections using calibrated torque wrench or torque screwdriver per manufacturer's written specifications.

END OF SECTION

SECTION 16620
EMERGENCY STANDBY POWER SYSTEM

PART 1- GENERAL

1.1 Standards - NEMA MG1

1.2 A complete emergency standby power system shall be provided including a diesel engine driven generator set and all auxiliary systems required for automatic operation.

1.3 Four sets of operating and maintenance instruction manuals shall be furnished. They shall cover the entire emergency standby power system including the transfer scheme.

1.4 Instruction of Owner personnel in performance of routine maintenance and operation shall be provided.

1.5 Renewal parts and major maintenance shall be readily available through authorized manufacturers dealers located within 100 miles of job site.

1.6 A single manufacturer's dealer shall supply and warrant all equipment for the emergency standby power system. Warranty: 5 year, 2500 hour warranty to cover parts, labor and travel for the full five years. This includes all parts as shipped from the factory but does not include normal maintenance items such as filters, oil and belts, etc.

1.7 Manufacturer of the engine generator set shall be Caterpillar or equal. . The Automatic Transfer Switch shall be provided by the generator manufacturer to provide sole source responsibility.

1.8 The generator set provided under these specifications shall be completely factory assembled and shall be listed and labeled per UL2200.

1.9 The engine generator set provided under these specifications shall comply with applicable EPA emissions requirements. Generator Sets shall be certified EPA Tier 3 Stationary Emergency. It shall be the responsibility of the engine generator supplier to comply with all applicable requirements of the Commonwealth of Virginia and or the authority having jurisdiction (AHJ) where the generator set will be installed.

PART 2- PRODUCTS

2.1 The generator set shall be mounted outside in a sound attenuated weatherproof enclosure with a sub-base diesel fuel tank and shall have a minimum standby rating sufficient to start and run all equipment in the facility not designated as "Standby" or "Spare". The engine shall have a maximum governed speed of 1800 rpm.

2.2 Generators:

A. Elevated Storage Tank: CAT D60-2LC(C4.4)-EPA/T3/LC1514P/SE/LC/60eKW, 480-277VAC/3-Phase/60Hz or equal.

B. Any cost associated with substituting a different model will be the responsibility of the installing electrical contractor.

2.3 The above Generator shall comply with the following:

A. Cooling System designed to operate in 122°F ambient temperatures with an air flow restriction of 0.5 inches of water.

B. Certified copy of generator set standard factory tests shall be provided for the engineers and owners records.

C. Voltage regulation shall be +/- 1.0 percent of rated voltage for any constant load between no load and rated load.

D. The generator set shall be capable of starting the equipment in the facility in multiple steps (not to exceed four). Voltage dip shall not be greater than 15% at any point in the operating cycle. Factory approved voltage dip calculations based on data obtained shall be submitted for review and approval.

E. The generator shall be rated to step load the following sequence:

1. Load Step 1 – On Transfer

a. All Station Loads shown in the electrical drawings except except Step-2 Loads.

b. Load Step 2 – Influent and Effluent Motorized Butterfly Valve Actuators.

F. Readily accessible voltage droop, voltage level and voltage gain controls shall be provided. Voltage level adjustment shall be a minimum of plus or minus 5 percent.

G. Generator insulation shall be Class H. Temperature rise shall not exceed 105°C over 40°C ambient for continuous operation at the standby rating.

H. Frequency regulation from no load to full load shall be in accordance with governor specification. For any addition of load up to 90 percent of rated load, the frequency shall recover to steady state frequency band within five seconds.

I. Equipment supplier shall furnish printed copy of equipment starting steps to Instrumentation/Controls equipment supplier to insure that the starting steps are included in the control systems.

J. Provide permanent magnet generator or Integrated Voltage Regulator (IVR).

2.4 Diesel Engine shall be Four Cycle

A. All engine ratings shall be shown in manufacturer's literature published at least six months prior to bid opening and engine shall be of a design that has been successfully used for at least three years.

B. Generator shall be driven by a single engine without the use of gearing.

C. Provide a generator mounted engine controller that provide Auto/Start/Stop, Engine Cooldown Timer, Emergency Stop, Engine Cycle Crank, and Programmable cycle timer. Controller indications shall include: Gnerator 3 phase voltage +/- 1% accuracy, RPM, Battery Voltage, Generator AC Current, Generator Frequency, Power metering (kW, kVA, kVAr, pf), Hour Meter (kW-Hours, kVAr-Hours), Engine oil pressure, Engine oil Temperature, Engine Coolant Temperature.

D. Single-Source Supplier: Fully prototype tested generator set. Generator set manufacturer must also make the engine.

2.5 Engine lubrication shall include a forced feed lubricating oil system with wet sump.

A. Provide water cooled lube oil cooler.

B. Provide full flow replaceable oil filters with spring loaded bypass valve to insure oil flow if filter clogs.

2.6 Engine combustion air cleaner shall be dry replaceable element type cleaner.

2.7 Engine fuel system shall be fuel injection type capable of performance on commercial Grade No. 2 fuel oil. Provide primary and secondary fuel filters of replaceable cartridge type. A positive displacement engine mounted fuel pump capable of 12' minimum suction shall be provided. All fuel lines shall have flexible connections and a check valve shall be provided ahead of the fuel pump.

2.8 Engine exhaust system shall include a minimum 18" long flexible steel exhaust connection for each exhaust outlet to muffler. For outdoor units with mufflers bolted to engine or engine housing, flex connection may be omitted.

A. Internally mounted critical silencer shall be provided.

B. For indoor units, mufflers and rigid exhaust pipe shall be insulated with calcium silicate suitable for temperatures up to 1000°F. Flexible connection shall have screen guard for protection of operating personnel.

C. For outdoor units, mufflers mounted on top of the weatherproof enclosure shall be shielded with formed expanded metal guards for protection of operating personnel.

D. Provide a threaded drain hole.

E. Diesel exhaust system piping shall be extra heavy black steel (schedule 80). Fitting shall be standard weight forged steel with beveled ends.

2.9 Engine governor shall be speed droop type which shall control the frequency within 3 pct of rated frequency from no load to full load. The frequency at any constant load shall remain within a steady state band width of plus or minus 0.33 pct of rated frequency.

2.10 Provide a thermostatically controlled jacket water heater to maintain proper generator starting conditions at ambient temperatures as low as -20°F. Heater voltage shall be suitable for circuit voltage shown on Contract Drawings.

2.11 Radiator shall be engine mounted and cooled by blower fan. Fan belts shall have tension adjustment. The radiator shall be capable of cooling the engine at its standby load ratings and 110°F ambient air temperature. The radiator shall be filled with ethylene glycol and water solution to protect to -20°F and shall include a cooling system rust inhibitor. All cooling system gaskets shall be suitable for use with ethylene glycol.

2.12 Provide engine driven centrifugal type water circulating pump and thermostatic valve to maintain engine at recommended temperature level.

2.13 Provide a thermostatically controlled heater in the generator to prevent condensation. Heater shall be suitable for circuit voltage shown on Contract Drawings.

2.14 Generator controls and main output circuit breaker shall be mounted on the generator.

A. The controls shall include the following meters and relays:

1. A.C. voltmeter

2. A.C. ammeter

3. Frequency meter

4. Running time meter

5. S.P.D.T. contacts that operate on failure of engine to run when "called for."

B. The controls shall include the following alarms which shall light an individual indicating lamp for each alarm condition and shall stop and lockout the unit. Lockout shall require manual reset.

1. Over-crank

2. Low oil pressure

3. High water temperature

4. Low Coolant Water Level

5. Over-speed

6. "Not In Automatic" alarm light

7. Auxiliary S.P.D.T. contact to indicate alarm condition (for use with plant enunciator system).

8. Indicator/Display lamp test switch to permit checking indicator and display lamps.

C. Starting and stopping controls shall be activated by contacts located in the transfer switch.

D. Output circuit breaker shall be installed inside of the weatherproof housing. The breaker shall be rated for generator full load amps and shall be of the molded case type and shall include a 12Vdc shunt trip.

2.15 Engine-generator set shall be provided with factory pad type vibration isolator between the frame and the generator components and must be IBC and seismic Zone-4 Certified.

2.16 Engine starting shall be electrically powered from lead-acid storage batteries, having voltage rating and ampere hour minimum capacity ratings recommended by the manufacturer to provide 120 seconds of cranking at an ambient temperature of 40°F. Provide batteries, battery rack, cables and a U/L listed automatic battery charger with automatic two rate charging that will provide recharge from 0 volts to full charge in 8 hours. Charger shall have 120 volt single phase input, ammeter, voltmeter and suitable enclosure. In addition to battery charger, an engine driven battery charging alternator shall be factory installed with required guards. Alternator shall be rated minimum of 24 volts and 45 amperes.

2.17 Finish paint coat of engine generator set, accessories and auxiliary equipment shall be standard factory color.

2.18 Sub-Base Diesel Fuel Tank

A. Provide a **Double-walled, UL 142 listed, fuel tank,** mounted under the base of the generator set. Capacity of the tank shall be rated for 48-Hours at 75% loaded. Bolt tank to the generator set base. Tank to be shipped to the jobsite connected to the generator as one piece.

B. Fuel fill cap and level indicator accessible from outside of generator.

C. Provide a 5-Gallon Over-Spill Kit on fuel fill inlet – external to generator.

D. Provide Low, High and Leak detection alarms and floats.

E. Equip tank with conduit space beneath the circuit breakers for cable runs.

2.19 Automatic Transfer Switch (ATS) shall be the delayed transition type.

A. ATS Ratings:

1. The ATS shall be 100Amp/3-Pole at 480-277VAC/3-Phase/4-Wire/60Hz.

B. The transfer function shall be accomplished as follows:

1. The transfer of load shall be initiated by a drop of any phase of normal supply voltage below 70 pct. of rated voltage.

2. Provide adjustable time delay in order to over-ride momentary power outages or fluctuations. Set delay at 20 seconds.

3. Load transfer to the generator shall occur only after the generator has attained at least 90 pct. of rated voltage and 95 pct. of rated frequency.

4. The total elapsed time between the loss of normal supply voltage and the transfer of load to the generator shall not exceed 30 seconds.

5. The load shall be transferred back to the normal supply when the voltage of each phase of the normal supply has continuously remained above 90 pct. of rated voltage for 6-60 seconds, adjustable.

6. To stagger motor starting provide a load disconnect control circuit consisting of 3 sets of single pole, double throw contacts that operate 3 seconds before transfer in either direction, and reset sequentially after operation of the switch, with an equal time between load contact operation. Controls, adjustable 2-60 seconds shall be provided. Contacts shall be rated 10 amps at 480 VAC.

7. The engine shall be stopped after a cool-down run following load transfer to the normal source, length of cool-down run shall be determined by engine manufacturer.

C. The switch shall be equipped with spare auxiliary relay contacts, 1 n.o., 1 n.c. that transfer when the normal source is energized or de-energized.

D. Switch shall be equipped with an auxiliary relay having S.P.D.T. contacts to indicate "Emergency Power Available."

E. Switch shall be equipped with an auxiliary relay having S.P.D.T. contacts to indicate "Normal Power Available."

F. The switch shall be equipped with five (5) auxiliary contacts; the contacts to open when the switch is in the emergency position.

G. Provide a time clock to automatically initiate exercising the engine as recommended by the engine manufacturer.

H. Ampere rating shall be continuous with the switch installed in an unventilated enclosure. The thermal capacity of the main contacts shall be not less than 20 times the continuous rating, for a minimum of 3 cycles.

I. WCR Ratings:

1. When coordinated with molded case circuit breakers, the minimum withstand and closing rating (WCR) shall be as follows, for a minimum of 3 electrical cycles. WCR rating of the By-Pass Isolation switch shall be equal to the ATS.

a.

	Amperage	3 Cycle Rating (UL1008)
1)	0-100A	22,000 Symmetrical
2)	101-399A	30,000
3)	400-599A	35,000
4)	600-1599A	50,000
5)	1600-3000A	100,000

2. ATS shall also be rated for 200,000 WCR when coordinated with current limiting fuses, regardless of ampere rating.

J. Transfer switch and all accessories shall be front accessible.

K. Switch shall be complete with:

1. Ammeter, voltmeter and selector switches to monitor all three phases of the load side of the switch.

2. Separate ammeter (and associated C.T.'s) and selector switch. Meter and switch shall be suitable for remote installation as indicated.

3. Pilot lights to indicate switch position (normal or emergency).

4. A pause-in-neutral feature shall be provided with an adjustable time period and shall be effective during switch operation in either direction.

L. The ATS shall be ASCO 300 Series (or equal) in a NEMA-3R enclosure.

2.20 Generator set shall be tested at the factory with a 0.8 Power Factor Test and provide testing reports to engineer. On Site: Provide resistive load bank test per NFPA-100. Load banks shall be furnished by the generator set supplier. After Load Bank Testing, provide site load tests to pump station capacity.

A. Site Tests: An installation check, start up, a load bank test and a station load test shall be performed by the manufacturer's local representative in the presence of the owner and the engineer. The engineer, regular operators, and the maintenance staff shall be notified one week in advance of the time and date of the site test. The contractor is responsible for providing all fuel required for testing filling the tank upon acceptance by the owner.

B. Fuel, lubricating oil, and antifreeze shall be checked for conformity to the manufacturer's recommendations under the environmental conditions present and expected.

C. Accessories that normally function while the set is standing by shall be checked prior to cranking the engine. This shall include: engine heaters, battery charger, generator strip heaters, remote enunciator, etc.

D. Start up under test mode to check for exhaust leaks, path of exhaust gases outside the building, cooling air flow, movement during starting and stopping, vibration during running, normal and emergency line to line voltage and phase rotation.

E. Automatic start up by means of simulated power outage to test remote automatic starting, transfer of the load, and automatic shutdown. Prior to this test, all transfer switch timers shall be adjusted for proper systems coordination. Engine temperature, oil pressure and battery charge level along with generator voltage, amperes, and frequency shall be monitored throughout the test.

F. During each test, data shall be tabulated at 30 minute intervals for the following:

1. Voltage - each phase

2. Amperage - each phase

3. Frequency

4. Power factor

5. Cooling water temperature

6. Exhaust gas temperature

7. Oil pressure

8. Ambient temperature

G. Results of all tests shall be submitted to the Engineer for approval prior to final acceptance of the equipment and installation.

H. All fuel and other consumables required for this test when performed on site shall be provided by the Contractor. Fuel tank shall be filled to capacity prior to acceptance of installation by Owner.

2.21 MONITORING POINTS

A. Make available monitoring points (I/Os) as indicated on Drawings.

PART 3- EXECUTION

3.1 The generator, fuel tank and all associated equipment shall be installed and tested according to current installation instructions provided by each manufacturer.

3.2 The equipment shall be installed where shown on the plans and in accordance with the manufacturer's recommendations and all applicable codes.

END OF SECTION

APPENDIX A:
GEOTECHNICAL ENGINEERING REPORT

GEOTECHNICAL ENGINEERING REPORT

Zion Crossroads Water and Sewer System
Elevated Water Storage Tank – Revised Location
Route 250 and Route 15
Fluvanna County, Virginia

Schnabel Reference: 16C13175 Task 05
October 11, 2017

Prepared For:
Dewberry Engineers, Inc.

Dewberry

Schnabel ENGINEERING

Schnabel
ENGINEERING

October 11, 2017

Ms. Melanie Leckey, PE
Dewberry Engineers, Inc.
4805 Lake Brook Drive, Suite 200
Glen Allen, VA 23060

Subject: **Geotechnical Engineering Report, Zion Crossroads Water and Sewer System, Elevated Water Storage Tank – Revised Location, Route 250 and Route 15, Fluvanna County, Virginia (Schnabel Reference 16C13175 Task 05)**

Dear Ms. Leckey:

SCHNABEL ENGINEERING, LLC (Schnabel) is pleased to submit our geotechnical engineering report for the revised location of the elevated water tank included in this project. This study was performed in accordance with your request on June 29, 2017 and authorization to proceed on August 31, 2017.

SITE AND PROJECT DESCRIPTION

The Zion Crossroads Water and Sewer System includes a series of water and sewer infrastructure additions and upgrades. These upgrades include approximately 23,000 lf of 10" diameter sewer force main, approximately 18,000 lf of 12" diameter waterline, a new water booster station, a new sewage pump station, and a new elevated water storage tank.

The proposed location of the elevated water storage tank is just west of the intersection of Route 250 and Route 15, south of Route 250 and west of Zion Crossroads Court. The revised location of the tank is about 75 ft west of the original proposed location. A Site Vicinity Map is included as Figure 1.

Proposed for construction is a 500,000 gallon elevated water storage tank standing about 120 ft tall. The cone shaped base will be about 33.5 ft in diameter, the pedestal will be about 10 ft in diameter, and the elevated tank will be about 55.5 ft in diameter. We anticipate a maximum structural load of about 4,750 kips.

We obtained the project information from a review of the Request For Proposal (RFP) documents, the Phase 1 Sewer System site plans and Phase 1 Water System site plans by Dewberry, preliminary tank drawings by Dewberry, structural loads provided by Caldwall Tanks, Inc., through communication with your office, and through our site visits.

schnabel-eng.com

T/ 434-975-3200 F/ 434-975-3233
480 Four Seasons Drive / Charlottesville, VA / 22901

SUBSURFACE EXPLORATION AND LABORATORY TESTING PROGRAM

We performed a subsurface exploration and field testing program to identify the subsurface stratigraphy underlying the site and to evaluate the geotechnical properties of the materials encountered. This program included test borings. Exploration methods used are discussed below. The appendices contain the results of our exploration.

Subsurface Exploration Methods

Test Borings

Schnabel's subcontractor, Ayers and Ayers, Inc. drilled four test borings for the revised tank location under our observation on September 20, 2017. Four borings were drilled for the original proposed location on January 12, 2017, by the same contractor. The Standard Penetration Test (SPT) was performed at selected depths in the borings. Appendix A includes specific observations, remarks, and logs for the borings; classification criteria; drilling methods; and sampling protocols. Figure 2, included at the end of this report, indicates the approximate test boring locations. We will retain soil samples up to 45 days beyond the issuance of this report, unless you request other disposition.

Soil Laboratory Testing

Our laboratory performed tests on selected samples collected during each subsurface exploration. The testing aided in the classification of materials encountered in the subsurface exploration and provided data for use in the development of recommendations for design of foundations, earthwork, and pavements. The results of the laboratory tests are included in Appendix B and are summarized for each stratum in the Site Geology and Subsurface Conditions section of this report. Selected test results are also shown on the boring logs in Appendix A.

Index Testing

We performed index testing on samples collected as part of each exploration to provide soil classifications and to provide parameters for use with published correlations with soil properties. Index testing included performing natural moisture content, Atterberg Limits, and gradation tests on six jar samples and one bulk sample of soil representing Stratum C1.

Compaction and CBR Testing

We performed Standard Proctor compaction and CBR testing to evaluate compaction characteristics and to provide soil parameters for pavement design. Testing was performed on a bulk sample representing Stratum C1 obtained during the exploration for the original proposed tank location. We consider the lab results representative of soils encountered during the exploration for the revised location.

SITE GEOLOGY AND SUBSURFACE CONDITIONS

Site Geology

We reviewed existing geologic data and information in our files. Based on this review, the geologic stratigraphy consists residual soils. Residual soils are derived through the in-place physical and chemical

©2017 All Rights Reserved

weathering of the underlying rock. The underlying parent rock consists of metagraywacke, quartzose schist, and mélange of Cambrian to late Proterozoic age.

Generalized Subsurface Stratigraphy

We characterized the following generalized subsurface stratigraphy based on the exploration and laboratory test data included in the appendices.

Ground Cover:

All borings encountered a layer of rootmat and topsoil at the ground surface with a depths up to about 7 inches.

Stratum A: Existing Fill

At the original proposed location, the borings encountered existing fill or cultivated soils below the surface layer consisting of Lean Clay (CL) with varying amounts of sand and root fragments to a depth of 2 ft. The fill soils were generally of low to moderate plasticity. Based on the Standard Penetration Tests performed, this stratum is medium stiff to stiff consistency, with N values of 6 to 10. Existing fill or cultivated soils were not encountered at the revised location.

Stratum C1: Fine-Grained Residuum

The borings encountered residual soils below the ground cover or Stratum A. Residual soils were also interlayered with disintegrated rock of Stratum D. Fine-grained residual soils of Stratum C1 consisted of silt (ML) and elastic silt (MH) with varying amounts of sand. These soils were generally observed to have moderate to high plasticity. Eight samples were tested to have liquid limits varying between 49 and 103, with plasticity indices from 13 to 43. The natural moisture contents measured varied from 14 to 46 percent, with an average of 28 percent. Based on the Standard Penetration Tests performed, the fine-grained soils of this stratum are generally very stiff to very hard consistency, with N values of 15 to 55.

We performed a Standard Proctor Compaction test and a CBR test on a bulk sample representing Stratum C1. The sample consisted of elastic silt with sand, and classified (MH)/(A-7-5) in accordance with ASTM and AASHTO classification systems. The compaction test resulted in a maximum dry density of 102.1 pcf at an optimum moisture content of 19.7 percent. Natural moisture content values of Stratum C1 soils tested in our laboratory varied from 6 percent below to 26 percent above the optimum value. We obtained a laboratory CBR value of 3.4 with a swell value of 3.8 percent for this sample.

Laboratory tests performed on samples representing Stratum C1 indicate these soils exhibit a medium to very high potential for moisture-related volume change (shrink/swell behavior).

Stratum C2: Coarse-Grained Residuum

Coarse-grained residual soils of Stratum C2 consisted of silty sand (SM). These soils were generally observed to have low to moderate plasticity. The natural moisture contents measured were 15 and 30 percent. Based on the Standard Penetration Tests performed, the coarse-grained residual soils are generally medium dense to dense, with N values of 21 to 43.

©2017 All Rights Reserved

Stratum D: Disintegrated Rock

We encountered disintegrated rock in Boring B-77 from about 22 to 27 ft, and from 47 to 50 ft, the maximum depth of exploration. We also encountered disintegrated rock in Boring B-93 from 37 to 42 ft. Disintegrated rock is defined as residual material with SPT N values between 60 blows per foot and refusal. Refusal is defined as an N value of 50 blows for a penetration of one inch or less. We did not observe sampler or auger refusal. The disintegrated rock of Stratum B was sampled as very dense silty sand (SM) and very hard sandy silt (ML).

Groundwater

We observed groundwater in Borings B-77 and B-93 at depths of 42 to 44 ft, about EL 500 to 502 ft, during drilling. The remaining borings caved dry at depths of 6 to 13 ft. The test boring logs in Appendix A include groundwater observations obtained during our subsurface exploration. These data include depths to groundwater encountered during drilling, upon drilling completion, and following completion of the boring.

Schnabel's drilling subcontractor installed a temporary water observation well in Boring B-77. We observed groundwater in this well at a depth of 23.6 ft, about EL 321 ft, 28 days after completion of the borings. We did not obtain long-term water level readings in the remaining borings since we backfilled them upon completion for safety.

The groundwater levels on the logs indicate our estimate of the hydrostatic water table at the time of our subsurface exploration. The final design should anticipate the fluctuation of the hydrostatic water table depending on variations in precipitation, surface runoff, pumping, evaporation, leaking utilities, stream levels, and similar factors.

Seismic Site Classification

We evaluated the Seismic Site Class for this project according to the International Building Code (IBC) Section 1615 (2012). Our analysis indicates Site Class D for this location. This Site Class was evaluated based on observed and extrapolated SPT values.

GEOTECHNICAL RECOMMENDATIONS

We based our geotechnical engineering analysis on the information developed from our subsurface exploration and soil laboratory testing, along with the project development plans, site plans, and structural loading furnished to our office. We recommend shallow foundations for support of the proposed elevated water tank based on our analysis. The following sections of the report provide our detailed recommendations.

Site Grading and Earthwork

We anticipate proposed site grades will require cut and fill placement of less than 2 ft, but trench excavations will be required for associated utilities. Recommendations for compacted fill subgrade preparation, fill soil requirements, and placement and compaction criteria are presented in subsequent sections.

©2017 All Rights Reserved

Compacted Fill Subgrades

Subgrades to receive compacted structural fill for structure or pavement support should be stripped of vegetation, topsoil, and organic matter. Schnabel's subsurface exploration indicated topsoil to depths of about 7 inches below the ground surface. However, stripping of previously cultivated sites typically results in some disturbance and contamination of near-surface soils, particularly during periods of wet weather. Therefore, we recommend a topsoil stripping depth of 1 ft be considered for the site during the project planning.

Compacted structural fill subgrades should consist of suitable soils of Stratum C1 or C2. These soils are expected to be encountered at shallow depths beneath the topsoil and root mat and existing fill soils of Stratum A.

The Geotechnical Engineer should evaluate the suitability of the fill subgrades. The stripped subgrades should be proofrolled with a loaded dump truck to evaluate the subgrade suitability for support of the compacted structural fill prior to any undercutting or initiation of fill placement. Areas that exhibit excessive pumping, weaving, or rutting should be scarified, dried and recompacted, or undercut and replaced with compacted structural fill as recommended by the Geotechnical Engineer. Subgrade evaluation techniques complementary to proofrolling could include a combination of probing with a penetrometer, drilling hand augers, or observing test pits.

If stripping and earthwork operations are performed during an extended period of warm, dry weather, the non-organic portions of the undercut materials may be reused as compacted structural fill. The use of these materials as compacted structural fill will depend on the soil moisture content, and the Contractor's ability to limit contamination of these materials with organic matter during stripping and undercutting. The Contractor may need to scarify and dry these soils to achieve adequate compaction.

When removal of unsuitable materials is required, the excavation should be performed in a manner to limit disturbance of the underlying suitable material. The excavation should be performed under the observation of the Geotechnical Engineer to evaluate required excavation depths.

Undercut volumes should be evaluated by cross sectioning. Other methods of calculating volumes of undercut, such as counting trucks, are less accurate and generally result in additional expense.

Compacted structural fill subgrades should be kept free of ponded water. Compacted structural fill subgrades should also be free of snow, ice, and frozen soils. If snow, ice, or frozen soils are present at subgrade levels, these materials should be removed as recommended by the Geotechnical Engineer.

Compacted structural fill subgrades should not be steeper than about 4H:1V. If steeper slopes are present, subgrades should be benched to permit placement of horizontal lifts of fill.

Compacted Fill

Compacted structural fill and backfill should consist of non-organic on-site soils. If off-site borrow materials are needed, these soils should classify CL, ML, SC, SM, SP, SW, GC, GM, GP, or GW according to ASTM D2487. Fill materials should not contain particles larger than 3 inches.

©2017 All Rights Reserved

Compacted structural fill should be placed in maximum 8-inch thick horizontal, loose lifts. Fill should be compacted to at least 95 percent of the maximum dry density per ASTM D698 (Standard Proctor).

Backfill placed in excavations, trenches, and other areas that large compaction equipment cannot access should be placed in maximum 6-inch thick lifts. Backfill should meet the material, placement, and compaction requirements outlined above.

Successful re-use of the excavated, on-site soils as compacted structural fill will depend on their natural moisture contents during excavation. Laboratory test results indicate soils encountered in proposed borrow areas are wet of the optimum moisture content. Scarifying and drying of these soils should be anticipated to achieve the recommended compaction. Drying of these soils will likely result in some delays, and may not be possible during cooler, wetter weather. We recommend that the earthwork be performed during the warmer, drier times of the year.

Shallow Foundations

We consider spread footings or a mat foundation suitable for support of the proposed tank. Foundations should be supported on suitable natural soils of Strata C1 and C2. We recommend that foundations supported on suitable natural soils of Strata C1 and C2 be designed for a net allowable soil bearing pressure of 5,000 psf. This bearing pressure provides a factor of safety against general bearing capacity failure of at least 3.0.

The above allowable soil bearing pressure may be increased by 33 percent for wind and seismic loads when used in conjunction with load combinations defined in IBC 2012 Section 1605.3.2, Alternative Basic Load Combinations for use with allowable stress design. This increase is not applicable for other allowable stress load combinations, strength design, or load and resistance factor design.

All foundation subgrades should be observed by the Geotechnical Engineer prior to placement of concrete to evaluate if subgrade materials are as anticipated.

Existing fill soils were encountered in portions of the site to depths of 2 ft, and are not considered suitable for support of the proposed water tank. If these soils are encountered at the design bearing grade, these soils should be removed and replaced as recommended by the Geotechnical Engineer. Unsuitable soils should be replaced with dense graded aggregate, controlled low strength material (CLSM), or concrete.

Settlements of foundations supported on suitable natural soils and on properly placed compacted structural fill are not expected to exceed about 2 inches. Differential settlement across the diameter of the foundation is not expected to exceed 0.002 inches per inch.

A modulus of subgrade reaction, k, of 100 pci should be used in the design of a mat foundation. The recommended modulus value is for a 1-ft-square plate. Some design software may consider different definitions of k for input. The Structural Engineer should contact our office if their software considers a different definition of k.

To limit the potential for damage due to moisture-related volume change of foundation soils, we recommend footings be founded at least 4 ft below final exterior grades. This depth is adequate for frost protection.

©2017 All Rights Reserved

To further limit the potential for damage from moisture-related volume change of foundation soils, site grades should be set to permit positive drainage of surface water away from the tank. Trees should not be planted within 25 ft of the foundation.

Pavements

The Contractor should prepare pavement subgrades and place compacted structural fill for pavement support as described in the Site Grading and Earthwork section of this report. Dense-graded aggregate placed as pavement base course should be compacted to at least 95 percent of maximum dry density according to ASTM D698, Standard Proctor. Dense-graded aggregate should be placed in maximum 8-inch thick loose lifts.

Final pavement subgrades should be proofrolled under the observation of the Geotechnical Engineer immediately prior to placing subbase or base course aggregate to evaluate their suitability to support the pavement.

We developed the recommended pavement sections according to the AASHTO 1993 design method for flexible pavements based on a design CBR value of 2.6. This design CBR value represents two-thirds of the laboratory value. The Type I Section should be used only in areas where truck traffic is not anticipated, while the Type II Section considers light truck traffic.

Our analysis considers that proper grading will be maintained to provide runoff from the pavement surface and beyond the limits of paved areas. We recommend the following pavement sections:

Table 1: Pavement Sections

Type Section	Thickness (inches)
Gravel Pavement Section – Type I Section	
Dense-Graded Aggregate Base Course, VDOT 21B	8
Asphalt Pavement Section – Type II Section	
Asphalt Concrete Surface Course, VDOT SM-9.5A	1.5
Asphalt Concrete Intermediate Course, VDOT IM-19.0A	2
Dense-Graded Aggregate Subbase Course, VDOT 21B	6

We recommend that reinforced concrete pavement be used in approach pad areas. These pads should be designed based on a modulus of subgrade reaction value, k, of 100 pci. The recommended modulus value is for a 1-ft-square plate. Some pavement design software may consider different definitions of k for input. The Civil Engineer should contact our office if their software considers a different definition of k.

Adequate control of surface drainage will be a very important consideration for the overall performance of this pavement design. The area surrounding pavements should be graded to direct surface water away

©2017 All Rights Reserved

from paved areas. Utility excavations within pavement areas should be backfilled with compacted structural fill.

CONSTRUCTION CONSIDERATIONS

Site Grading and Earthwork

The test boring data indicate the approximate depth of topsoil based on our visual identification procedures. The depth of stripping needed to provide a suitable base for placement of earthwork or pavements may include topsoil and other softer surficial layers. Stripping depths in previously cultivated areas will be greater, particularly during periods of wet weather. The depth of required stripping should be determined by the excavation Contractor prior to construction using test pits, probes, or other means.

The on-site soils are susceptible to moisture changes, will be easily disturbed, and will be difficult to compact under wet weather conditions. Drying and reworking of the soils are likely to be difficult during periods of wet months. We recommend that the earthwork phases of this project be performed during the warmer, drier times of the year to limit the potential for disturbance of on-site soils.

The soils at this site consist primarily of moderately to highly plastic clays and silts. These soils are moisture sensitive, and will become readily disturbed by construction traffic on exposed surfaces of wet subgrades. We recommend avoiding wet weather site preparation and grading activities. If wet weather work is performed, the quantities of disturbed soils to be excavated can be expected to increase.

Traffic on stripped or undercut subgrades should be limited to reduce disturbance of underlying soils. Also, using lightweight, track-mounted dozer equipment for stripping will limit the disturbance of underlying soils, and may reduce the undercut volume needed. The Contractor should provide site drainage to maintain subgrades free of water and to avoid saturation and disturbance of the subgrade soils before placing compacted structural fill, pavement base course or moisture barrier material. This site drainage will be important during all phases of the construction work. The Contractor should be responsible for reworking of subgrades and compacted structural fill that were initially considered suitable but were later disturbed by equipment and/or weather.

Foundations

The Contractor should exercise care during excavation for foundations so that as little disturbance as possible occurs at the foundation level. The Contractor should carefully clean loose or soft soils from the bottom of the excavation before placing concrete. A Geotechnical Engineer from our firm should observe foundation subgrades prior to concrete placement to evaluate whether subgrade soils are as anticipated in this report.

Foundation subgrades needing undercut should be concreted at the elevation of undercut or backfilled to the original design subgrade elevation with dense graded aggregate, controlled low strength material (CLSM), or lean concrete. We do not recommend open-graded crushed stone backfill since this material provides a path for moisture to reach subgrade soils, resulting in an increased potential for shrink/swell related distress. The Contractor should place foundation concrete immediately after excavation of the foundation to prevent accumulation of water in the excavation or drying of foundation soils.

©2017 All Rights Reserved

The potential for variation of moisture content in foundation soils is probably greatest during construction. If the moisture content of foundation soils increases or decreases during construction, a moisture-related change in volume will likely occur as these soils return to their natural moisture content. Therefore, prompt placement of concrete, backfilling, and grading are very important for proper foundation performance.

Engineering Services During Construction

The engineering recommendations provided in this report are based on the information obtained from the subsurface exploration and laboratory testing. However, conditions on the site may vary between the discrete locations observed at the time of our subsurface exploration. The nature and extent of variations between borings may not become evident until during construction.

To account for this variability, we should provide professional observation and testing of subsurface conditions revealed during construction as an extension of our engineering services. These services will also help in evaluating the contractor's conformance with the plans and specifications in accordance with building code requirements. Because of our unique position to understand the intent of the geotechnical engineering recommendations, retaining Schnabel for these services will allow the owner to receive consistent service throughout the project construction.

General Specification Recommendations

An allowance should be established to account for possible additional costs that may be required to construct earthwork and foundations as recommended in this report. Additional costs may be incurred for a variety of reasons including variation of soil between borings, greater than anticipated unsuitable soils, need for borrow fill material, wet on-site soils, obstructions, etc.

The project specifications should indicate the Contractor's responsibility for providing adequate site drainage during construction. Inadequate drainage will most likely lead to disturbance of soils by construction traffic and increased volume of undercut.

This report may be made available to prospective bidders for informational purposes. We recommend that the project specifications contain the following statement:

> *Schnabel Engineering, LLC, has prepared this geotechnical engineering report for this project. This report is for informational purposes only and is not part of the contract documents. The opinions expressed represent the Geotechnical Engineer's interpretation of the subsurface conditions, tests, and the results of analyses performed. Should the data contained in this report not be adequate for the Contractor's purposes, the Contractor may make, before bidding, independent exploration, tests and analyses. This report may be examined by bidders at the office of the Owner, or copies may be obtained from the Owner at nominal charge.*

Additional data and reports prepared by others that could have an impact upon the Contractor's bid should also be made available to prospective bidders for informational purposes.

©2017 All Rights Reserved

LIMITATIONS

We based the analyses and recommendations submitted in this report on the information revealed by our exploration. We attempted to provide for normal contingencies, but the possibility remains that unexpected conditions may be encountered during construction.

This report has been prepared to aid in the evaluation of this site and to assist in the design of the project. It is intended for use concerning this specific project. We based our recommendations on information on the site and proposed construction as described in this report. Substantial changes in loads, locations, or grades should be brought to our attention so we can modify our recommendations as needed. We would appreciate an opportunity to review the plans and specifications as they pertain to the recommendations contained in this report, and to submit our comments to you based on this review.

We have endeavored to complete the services identified herein in a manner consistent with that level of care and skill ordinarily exercised by members of the profession currently practicing in the same locality and under similar conditions as this project. No other representation, express or implied, is included or intended, and no warranty or guarantee is included or intended in this report, or other instrument of service.

We appreciate the opportunity to be of service for this project. Please call us if you have any questions regarding this report.

Sincerely,

SCHNABEL ENGINEERING, LLC

Noland M. Silman, PE
Project Engineer

COMMONWEALTH OF VIRGINIA
NOLAND SILMAN
Lic. No. 050054
PROFESSIONAL ENGINEER

Jeremy L. Mydlinski, PE
Senior Associate

COMMONWEALTH OF VIRGINIA
JEREMY L. MYDLINSKI
Lic. No. 033936
PROFESSIONAL ENGINEER

NMS:JLM:dah

Figures
Appendix A: Subsurface Exploration Data
Appendix B: Soil Laboratory Test Data

©2017 All Rights Reserved

FIGURES

Figure 1: Site Vicinity Map
Figure 2: Boring Location Plan

©2017 All Rights Reserved

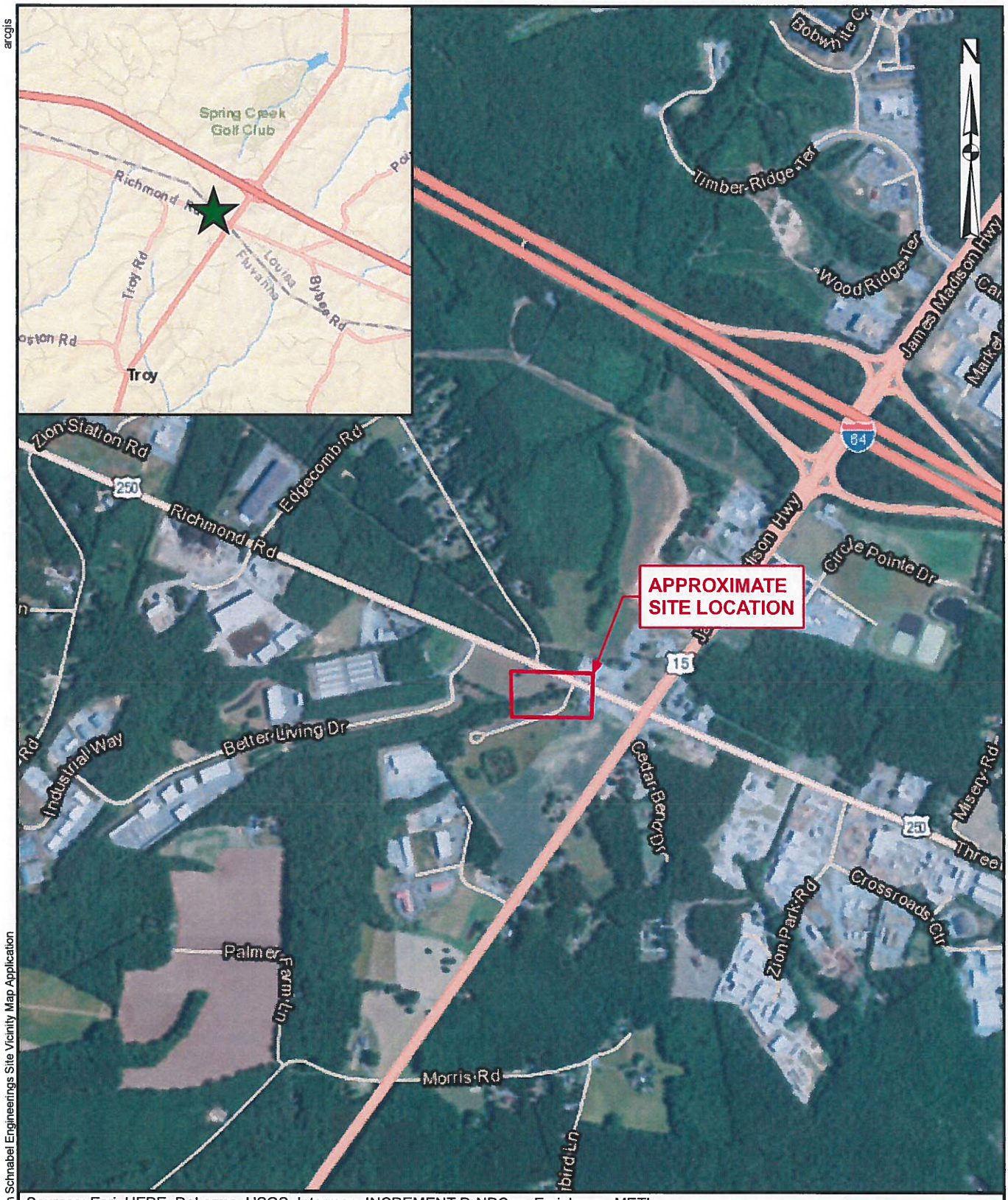

Sources: Esri, HERE, DeLorme, USGS, Intermap, INCREMENT P, NRCan, Esri Japan, METI, Esri China (Hong Kong), Esri Korea, Esri (Thailand), MapmyIndia, NGCC, © OpenStreetMap contributors, and the GIS User Community
Esri, HERE, DeLorme, MapmyIndia, © OpenStreetMap contributors

NOT TO SCALE

Schnabel ENGINEERING

ZION CROSSROADS WATER AND SEWER SYSTEM
ROUTE 250 AND ROUTE 15
FLUVANNA COUNTY, VIRGINIA

PROJECT NO. 16C13175 Task 05

SITE VICINITY MAP

FIGURE 1

10/9/2017 This Map was Created in Schnabel Engineerings Site Vicinity Map Application

arcgis

© Schnabel Engineering, 2017. All Rights Reserved.

Base Plan Provided by Dewberry on 6/29/2017.

Schnabel ENGINEERING	ZION CROSSROADS WATER AND SEWER SYSTEM ROUTE 250 AND ROUTE 15 FLUVANNA COUNTY, VIRGINIA	Figure Name: BORING LOCATION PLAN	Done: E. BRADSHAW	Figure Number: 2
		Project Number: 16C13175, TASK 05	Reviewed: N. SILMAN	Date: OCT 2017

G:\2011 - 2020\2016\Richmond\16C13175 Zion Crossroads Water and Sewer\03-SE Products\08-CAD\Boring Location Plan.dwg

APPENDIX A

SUBSURFACE EXPLORATION DATA

Subsurface Exploration Procedures
General Notes for Subsurface Exploration Logs
Identification of Soil
Boring Logs, B-75 through B-78, and B-93 through B-96

©2017 All Rights Reserved

SUBSURFACE EXPLORATION PROCEDURES

Test Borings – Hollow Stem Augers

The borings are advanced by turning a continuous flight auger with a center opening of 2¼ inches. A plug device blocks off the center opening while augers are advanced. Cuttings are brought to the surface by the auger flights. Sampling is performed through the center opening in the hollow stem auger, by standard methods, after removal of the plug. Usually, no water is introduced into the boring.

Standard Penetration Test Results

The numbers in the Sampling Data column of the boring logs represent Standard Penetration Test (SPT) results. Each number represents the blows needed to drive a 2-inch O.D., 1⅜-inch I.D. split-spoon sampler 6 inches, using a 140-pound hammer falling 30 inches. The sampler is typically driven a total of 18 inches. The first 6 inches are considered a seating interval. The total of the number of blows for the second and third 6-inch intervals is the SPT "N value." The SPT is performed according to ASTM D1586.

Soil Classification Criteria

The group symbols on the logs represent the Unified Soil Classification System Group Symbols (ASTM D2487) based on visual observation and limited laboratory testing of the samples. Criteria for visual identification of soil samples are included in this appendix. Some variation can be expected between samples visually classified and samples classified in the laboratory.

Disintegrated rock is defined as residual material with SPT N values between 60 blows per foot and refusal. Refusal is defined as an N value of 50 blows for a penetration of one inch or less.

Pocket Penetrometer Results

The values following "PP=" in the sampling data column of the logs represent pocket penetrometer readings. Pocket penetrometer readings provide an estimate of the unconfined compressive strength of fine-grained soils.

Water Observation Wells

A temporary water observation well was installed in Boring B-77 by inserting a hand-slotted, 1¼-inch PVC pipe in the boring. The pipe was capped and the area surrounding the pipe was backfilled with cuttings from the boring.

Boring Locations and Elevations

Boring locations were located using sub-meter GPS equipment. Approximate boring locations are shown on Figure 2. Ground surface elevations at the boring locations were obtained from the site topographic plans and are indicated on the boring logs. Locations and elevations should be considered no more accurate than the methods used to determine them.

©2017 All Rights Reserved

GENERAL NOTES FOR SUBSURFACE EXPLORATION LOGS

1. Numbers in sampling data column next to Standard Penetration Test (SPT) symbols indicate blows required to drive a 2-inch O.D., 1⅜-inch I.D. sampling spoon 6 inches using a 140 pound hammer falling 30 inches. The Standard Penetration Test (SPT) N value is the number of blows required to drive the sampler 12 inches, after a 6 inch seating interval. The Standard Penetration Test is performed in general accordance with ASTM D1586.
2. Visual classification of soil is in accordance with terminology set forth in "Identification of Soil." The ASTM D2487 group symbols (e.g., CL) shown in the classification column are based on visual observations.
3. Estimated water levels indicated on the logs are only estimates from available data and may vary with precipitation, porosity of the soil, site topography, and other factors.
4. Refusal at the surface of rock, boulder, or other obstruction is defined as an SPT resistance of 50 blows for 1 inch or less of penetration.
5. The logs and related information depict subsurface conditions only at the specific locations and at the particular time when drilled or excavated. Soil conditions at other locations may differ from conditions occurring at these locations. Also, the passage of time may result in a change in the subsurface soil and water level conditions at the subsurface exploration location.
6. The stratification lines represent the approximate boundary between soil and rock types as obtained from the subsurface exploration. Some variation may also be expected vertically between samples taken. The soil profile, water level observations and penetration resistances presented on these logs have been made with reasonable care and accuracy and must be considered only an approximate representation of subsurface conditions to be encountered at the particular location.
7. Key to symbols and abbreviations:

☒	S-1, SPT	Sample No., Standard Penetration Test
	5+10+1	Number of blows in each 6-inch increment

LL	Liquid Limit
MC	Moisture Content (percent)
PL	Plastic Limit
PP	Pocket Penetrometer Reading (tsf)
%Passing#200	Percent by weight passing a No. 200 Sieve

©2017 All Rights Reserved

IDENTIFICATION OF SOIL

I. DEFINITION OF SOIL GROUP NAMES (ASTM D2487)

			SYMBOL	GROUP NAME
Coarse-Grained Soils More than 50% retained on No. 200 sieve	Gravels – More than 50% of coarse fraction retained on No. 4 sieve Coarse, ¾" to 3" Fine, No. 4 to ¾"	Clean Gravels Less than 5% fines	GW	WELL GRADED GRAVEL
			GP	POORLY GRADED GRAVEL
		Gravels with fines More than 12% fines	GM	SILTY GRAVEL
			GC	CLAYEY GRAVEL
	Sands – 50% or more of coarse Fraction passes No. 4 sieve Coarse, No. 10 to No. 4 Medium, No. 40 to No. 10 Fine, No. 200 to No. 40	Clean Sands Less than 5% fines	SW	WELL GRADED SAND
			SP	POORLY GRADED SAND
		Sands with fines More than 12% fines	SM	SILTY SAND
			SC	CLAYEY SAND
Fine-Grained Soils 50% or more passes the No. 200 sieve	Silts and Clays – Liquid Limit less than 50 Low to medium plasticity	Inorganic	CL	LEAN CLAY
			ML	SILT
		Organic	OL	ORGANIC CLAY
				ORGANIC SILT
	Silts and Clays – Liquid Limit 50 or more Medium to high plasticity	Inorganic	CH	FAT CLAY
			MH	ELASTIC SILT
		Organic	OH	ORGANIC CLAY
				ORGANIC SILT
Highly Organic Soils	Primarily organic matter, dark in color and organic odor		PT	PEAT

II. DEFINITION OF SOIL COMPONENT PROPORTIONS (ASTM D2487)

			Examples
Adjective Form	GRAVELLY SANDY	>30% to <50% coarse grained component in a fine-grained soil	GRAVELLY LEAN CLAY
	CLAYEY SILTY	>12% to <50% fine grained component in a coarse-grained soil	SILTY SAND
"With"	WITH GRAVEL WITH SAND	>15% to <30% coarse grained component in a fine-grained soil	FAT CLAY WITH GRAVEL
	WITH GRAVEL WITH SAND	>15% to <50% coarse grained component in a coarse-grained soil	POORLY GRADED GRAVEL WITH SAND
	WITH SILT WITH CLAY	>5% to <12% fine grained component in a coarse-grained soil	POORLY GRADED SAND WITH SILT

III. GLOSSARY OF MISCELLANEOUS TERMS

SYMBOLS ..... Unified Soil Classification Symbols are shown above as group symbols. A dual symbol "-" indicates the soil belongs to two groups. A borderline symbol "/" indicates the soil belongs to two possible groups.

FILL ..... Man-made deposit containing soil, rock and often foreign matter.

PROBABLE FILL ..... Soils which contain no visually detected foreign matter but which are suspect with regard to origin.

DISINTEGRATED ROCK (DR) ..... Residual materials with a standard penetration resistance (SPT) between 60 blows per foot and refusal. Refusal is defined as an SPT of 50 blows for 1" or less penetration.

BOULDERS & COBBLES ..... Boulders are considered rounded pieces of rock larger than 12 inches, while cobbles range from 3 to 12-inch size.

LENSES ..... 0 to ½-inch seam within a material in a test pit.

LAYERS ..... ½ to 12-inch seam within a material in a test pit.

POCKET ..... Discontinuous body within a material in a test pit.

MOISTURE CONDITIONS ..... Wet, moist or dry to indicate visual appearance of specimen.

COLOR ..... Overall color, with modifiers such as light to dark or variation in coloration.

©2017 All Rights Reserved

Schnabel ENGINEERING — **TEST BORING LOG**

Project: Zion Crossroads Water and Sewer System
Route 250 and Route 15
Fluvanna County, Virginia

Boring Number: **B-75**
Contract Number: 16C13175 Task 05
Sheet: 1 of 1

Contractor: Ayers & Ayers, Inc.
Powhatan, Virginia
Contractor Foreman: J. Ayers Jr.
Schnabel Representative: E. Bradshaw
Equipment: CME-45B (ATV)
Method: 2-1/4" I.D. Hollow Stem Auger

Hammer Type: Safety Hammer (140 lb)
Dates Started: 1/12/17 **Finished:** 1/12/17
Location: See Location Plan

Ground Surface Elevation: 545± (ft) **Total Depth:** 15.0 ft

Groundwater Observations

	Date	Time	Depth	Casing	Caved
Encountered	1/12	---	Dry	---	---
Completion	1/12	---	Dry	---	---
Casing Pulled	1/12	---	Dry	---	8.0'

DEPTH (ft)	MATERIAL DESCRIPTION	SYMBOL	ELEV (ft)	STRATUM	SAMPLING DEPTH	SAMPLING DATA	TESTS	REMARKS
0.3	Rootmat and topsoil; 3 inches		544.3					
	FILL, sampled as sandy lean clay; moist, reddish brown, contains root fragments	FILL		A		S-01, SPT 4+5+5 REC=11", 61%		FILL
2.0	ELASTIC SILT WITH SAND; moist, reddish brown	MH	542.5			S-02, SPT 9+13+14 REC=15", 83%	LL = 53 PL = 35 MC = 31.1% % Passing #200 = 78.9	RESIDUUM
					5	S-03, SPT 8+12+15 REC=14", 78%		
6.0	SILT WITH SAND; moist, reddish brown and brown	ML	538.5	C1		S-04, SPT 10+10+15 REC=14", 78%		
					10	S-05, SPT 9+11+12 REC=16", 89%		
15.0			529.5		15	S-06, SPT 5+8+11 REC=15", 83%		

Bottom of Boring at 15.0 ft.
Boring terminated at selected depth.
Boring backfilled with cuttings upon completion.

TEST BORING LOG 16C13175 COMBINED LOGS.GPJ SCHNABEL DATA TEMPLATE 2008_07_06.GDT 10/9/17

Schnabel ENGINEERING — **TEST BORING LOG**

Project: Zion Crossroads Water and Sewer System
Route 250 and Route 15
Fluvanna County, Virginia

Boring Number: B-76
Contract Number: 16C13175 Task 05
Sheet: 1 of 1

Contractor: Ayers & Ayers, Inc.
Powhatan, Virginia
Contractor Foreman: J. Ayers Jr.
Schnabel Representative: E. Bradshaw
Equipment: CME-45B (ATV)
Method: 2-1/4" I.D. Hollow Stem Auger

Hammer Type: Safety Hammer (140 lb)
Dates Started: 1/12/17 **Finished:** 1/12/17
Location: See Location Plan

Ground Surface Elevation: 545± (ft) **Total Depth:** 20.0 ft

Groundwater Observations

	Date	Time	Depth	Casing	Caved
Encountered	1/12	—	Dry	—	—
Completion	1/12	—	Dry	—	—
Casing Pulled	1/12	—	Dry	—	10.5'

DEPTH (ft)	MATERIAL DESCRIPTION	SYMBOL	ELEV (ft)	STRATUM	SAMPLING DEPTH	SAMPLING DATA	TESTS	REMARKS
0.3	Rootmat and topsoil; 3 inches		544.3					
	FILL, sampled as sandy lean clay; moist, orangish brown, contains root fragments	FILL		A		S-01, SPT 3+4+5 REC=13", 72%		FILL
2.0			542.5			S-02, SPT 9+10+13 REC=12", 67%	MC = 39.4%	RESIDUUM
	ELASTIC SILT WITH SAND; contains quartz fragments	MH						
4.0			540.5	C1				
	SANDY SILT; moist, orangish brown	ML			5	S-03, SPT 10+13+17 REC=12", 67%		
6.0			538.5					
	SILTY SAND, fine to medium grained sand; moist, orangish brown with mottles of white	SM		C2		S-04, SPT 6+13+15 REC=13", 72%		
					10	S-05, SPT 8+12+14 REC=9", 50%	MC = 15.1%	
					15	S-06, SPT 6+11+15 REC=11.5", 64%		
	Change: contains rock fragments					S-07, SPT 6+10+11 REC=13", 72%		
20.0			524.5		20			

Bottom of Boring at 20.0 ft.
Boring terminated at selected depth.
Boring backfilled with cuttings upon completion.

Schnabel ENGINEERING — **TEST BORING LOG**

Project: Zion Crossroads Water and Sewer System
Route 250 and Route 15
Fluvanna County, Virginia

Boring Number: **B-77**
Contract Number: 16C13175 Task 05
Sheet: 1 of 2

Contractor: Ayers & Ayers, Inc.
Powhatan, Virginia
Contractor Foreman: J. Ayers Jr.
Schnabel Representative: E. Bradshaw
Equipment: CME-45B (ATV)
Method: 2-1/4" I.D. Hollow Stem Auger
Hammer Type: Safety Hammer (140 lb)
Dates Started: 1/12/17 **Finished:** 1/12/17
Location: See Location Plan
Ground Surface Elevation: 544± (ft) **Total Depth:** 50.0 ft

Groundwater Observations

	Date	Time	Depth	Casing	Caved
Encountered	1/12	11:38 AM	44.0'	---	---
Completion	1/12	12:15 PM	42.5'	---	---
Observation Well	1/12	12:16 PM	42.5'	---	---
Observation Well	2/9	4:30 PM	23.6'	---	---
Observation Well	3/6	1:36 PM	24.0'	---	---

DEPTH (ft)	MATERIAL DESCRIPTION	SYMBOL	ELEV (ft)	STRATUM	SAMPLING DEPTH	SAMPLING DATA	TESTS	REMARKS
0.3	Rootmat and topsoil; 3 inches		543.8					FILL
	FILL, sampled as lean clay with sand; moist, reddish brown, contains root fragments	FILL		A		S-01, SPT 4+3+3 REC=14.5", 81%		
2.0	ELASTIC SILT; moist, reddish brown	MH	542.0	C1		S-02, SPT 4+10+12 REC=14", 78%		RESIDUUM
					5	S-03, SPT 6+10+11 REC=14", 78%	LL = 69 PL = 45 MC = 31.1% % Passing #200 = 89.7	
6.0	SILTY SAND, fine to medium grained sand; moist, reddish brown	SM	538.0	C2		S-04, SPT 12+15+17 REC=7", 39%		
8.5	SILT WITH SAND; moist, reddish brown and brown	ML	535.5	C1	10	S-05, SPT 9+15+19 REC=13.5", 75%	LL = 49 PL = 36 MC = 19.3% % Passing #200 = 84.5	
					15	S-06, SPT 6+12+14 REC=10", 56%		
					20	S-07, SPT 10+16+19 REC=10", 56%	MC = 16.8%	
22.0	DISINTEGRATED ROCK, sampled as silt with sand; moist, light brown, contains mica	DR	522.0	D	25	S-08, SPT 12+32+40 REC=16", 89%		
27.0		SM	517.0	C2				

(continued)

TEST BORING LOG 16C13175 COMBINED LOGS.GPJ SCHNABEL DATA TEMPLATE 2008_07_06.GDT 10/9/17

Schnabel ENGINEERING — **TEST BORING LOG**

Project: Zion Crossroads Water and Sewer System
Route 250 and Route 15
Fluvanna County, Virginia

Boring Number: B-77
Contract Number: 16C13175 Task 05
Sheet: 2 of 2

DEPTH (ft)	MATERIAL DESCRIPTION	SYMBOL	ELEV (ft)	STRATUM	SAMPLING DEPTH	SAMPLING DATA	TESTS	REMARKS
	SILTY SAND; moist, orangish brown, contains mica *(continued)*							RESIDUUM
					30	S-09, SPT 7+12+16 REC=16.5", 92%		
	Change: light brown with streaks of black, contains rock fragments				35	S-10, SPT 8+11+17 REC=15", 83%		
		SM		C2				
	Change: orangish brown with mottles of black				40	S-11, SPT 5+11+15 REC=18", 100%	MC = 29.8%	
					45	S-12, SPT 15+19+24 REC=11", 61%		
47.0	DISINTEGRATED ROCK, sampled as silty sand; moist, reddish brown, contains rock fragments	DR	497.0	D				
					50	S-13, SPT 20+23+43 REC=17", 94%		
50.0			494.0					

Bottom of Boring at 50.0 ft.
Boring terminated at selected depth.
Temporary well installed upon completion.

Schnabel ENGINEERING — **TEST BORING LOG**

Project: Zion Crossroads Water and Sewer System
Route 250 and Route 15
Fluvanna County, Virginia

Boring Number: **B-78**
Contract Number: 16C13175 Task 05
Sheet: 1 of 1

Contractor: Ayers & Ayers, Inc.
Powhatan, Virginia
Contractor Foreman: J. Ayers Jr.
Schnabel Representative: E. Bradshaw
Equipment: CME-45B (ATV)
Method: 2-1/4" I.D. Hollow Stem Auger
Hammer Type: Safety Hammer (140 lb)
Dates Started: 1/12/17 **Finished:** 1/12/17
Location: See Location Plan
Ground Surface Elevation: 544± (ft) **Total Depth:** 20.0 ft

Groundwater Observations

	Date	Time	Depth	Casing	Caved
Encountered	1/12	—	Dry	—	—
Completion	1/12	—	Dry	—	—
Casing Pulled	1/12	—	Dry	—	10.5'

DEPTH (ft)	MATERIAL DESCRIPTION	SYMBOL	ELEV (ft)	STRATUM	SAMPLING DEPTH	SAMPLING DATA	TESTS	REMARKS
0.3	Rootmat and topsoil; 3 inches		543.8					FILL
	FILL, sampled as sandy lean clay; moist, orangish brown, contains root fragments	FILL		A		S-01, SPT 2+3+4 REC=16", 89%		
2.0	ELASTIC SILT; moist, reddish brown	MH	542.0			S-02, SPT 8+9+13 REC=15", 83%	LL = 80 PL = 48 MC = 36.0% % Passing #200 = 91.5	RESIDUUM
					5	S-03, SPT 6+8+12 REC=17", 94%		
6.0	SANDY SILT; moist, pinkish brown	ML	538.0	C1		S-04, SPT 6+11+17 REC=15", 83%		
					10	S-05, SPT 9+12+14 REC=15", 83%		
	Change: light brown, contains mica				15	S-06, SPT 10+13+14 REC=13", 72%	MC = 19.8%	
					20	S-07, SPT 13+23+32 REC=10", 56%		
20.0			524.0					

Bottom of Boring at 20.0 ft.
Boring terminated at selected depth.
Boring backfilled with cuttings upon completion.

Schnabel ENGINEERING — **TEST BORING LOG**

Project: Zion Crossroads Water and Sewer System
Route 250 and Route 15
Fluvanna County, Virginia

Boring Number: **B-93**
Contract Number: 16C13175 Task 05
Sheet: 1 of 2

Contractor: Ayers & Ayers, Inc.
Powhatan, Virginia
Contractor Foreman: J. Ayers Jr.
Schnabel Representative: B. Watson
Equipment: CME-45B (ATV)
Method: 2-1/4" I.D. Hollow Stem Auger

Hammer Type: Safety Hammer (140 lb)
Dates Started: 9/20/17 **Finished:** 9/20/17
Location: See Location Plan

Ground Surface Elevation: 544± (ft) **Total Depth:** 50.0 ft

Groundwater Observations

	Date	Time	Depth	Casing	Caved
Encountered ▽	9/20	11:25 AM	44.0'	---	---
Completion ▼	9/20	11:30 AM	42.5'	---	---
Casing Pulled	9/20	---	Dry	---	8.0'

DEPTH (ft)	MATERIAL DESCRIPTION	SYMBOL	ELEV (ft)	STRATUM	SAMPLING DEPTH	SAMPLING DATA	TESTS	REMARKS
0.5	Rootmat and topsoil; 6 inches		543.5					RESIDUUM
	ELASTIC SILT; moist, reddish brown, contains rock fragments	MH				S-01, SPT 5+11+12 REC=7", 39%		
						S-02, SPT 8+13+19 REC=14", 78%		
					5	S-03, SPT 9+12+19 REC=15", 83%	LL = 83 PL = 46 MC = 31.1% % Passing #200 = 89.4	
7.0	SANDY SILT; moist, reddish brown, contains mica		537.0			S-04, SPT 11+18+27 REC=13", 72%	MC = 13.8%	
					10	S-05, SPT 12+15+21 REC=14", 78%		
				C1				
					15	S-06, SPT 9+15+23 REC=15", 83%		
		ML						
	Change: contains rock fragments, and mica				20	S-07, SPT 9+17+20 REC=14", 78%	MC = 17.3%	
	Change: contains mica				25	S-08, SPT 7+11+19 REC=17", 94%		

(continued)

TEST BORING LOG 16C13175 COMBINED LOGS.GPJ SCHNABEL DATA TEMPLATE 2008 07_06.GDT 10/9/17

Schnabel ENGINEERING — **TEST BORING LOG**

Project: Zion Crossroads Water and Sewer System
Route 250 and Route 15
Fluvanna County, Virginia

Boring Number: **B-93**
Contract Number: 16C13175 Task 05
Sheet: 2 of 2

DEPTH (ft)	MATERIAL DESCRIPTION	SYMBOL	ELEV (ft)	STRATUM	SAMPLING DEPTH	SAMPLING DATA	TESTS	REMARKS
	SANDY SILT; moist, reddish brown, contains mica *(continued)*							RESIDUUM
	Change: light brown				30	S-09, SPT 18+22+31 REC=14", 78%		
		ML		C1				
	Change: reddish brown				35	S-10, SPT 19+22+27 REC=13", 72%	MC = 15.1%	
37.0	DISINTEGRATED ROCK, sampled as sandy silt; moist, brown with mottled gray, contains mica		507.0					
		DR		D	40	S-11, SPT 16+27+49 REC=13", 72%		
42.0	SANDY SILT; moist, brown with mottled gray, contains mica		502.0					
					45	S-12, SPT 11+17+23 REC=16", 89%		
		ML		C1				
	Change: light brown with mottled black					S-13, SPT 6+9+12 REC=18", 100%	MC = 45.6%	
50.0			494.0		50			

Bottom of Boring at 50.0 ft.
Boring terminated at selected depth.
Boring backfilled with cuttings upon completion.

Schnabel ENGINEERING — **TEST BORING LOG**

Project: Zion Crossroads Water and Sewer System
Route 250 and Route 15
Fluvanna County, Virginia

Boring Number: **B-94**
Contract Number: 16C13175 Task 05
Sheet: 1 of 1

Contractor: Ayers & Ayers, Inc.
Powhatan, Virginia
Contractor Foreman: J. Ayers Jr.
Schnabel Representative: B. Watson
Equipment: CME-45B (ATV)
Method: 2-1/4" I.D. Hollow Stem Auger

Hammer Type: Safety Hammer (140 lb)
Dates Started: 9/20/17 **Finished:** 9/20/17
Location: See Location Plan

Ground Surface Elevation: 544± (ft) **Total Depth:** 20.0 ft

Groundwater Observations

	Date	Time	Depth	Casing	Caved
Encountered	9/20	—	Dry	—	—
Completion	9/20	—	Dry	—	—
Casing Pulled	9/20	—	Dry	—	12.5'

DEPTH (ft)	MATERIAL DESCRIPTION	SYMBOL	ELEV (ft)	STRATUM	SAMPLING DEPTH	SAMPLING DATA	TESTS	REMARKS
0.6	Rootmat and topsoil; 7 inches		543.4			S-01, SPT 3+6+9 REC=10", 56%		RESIDUUM
	ELASTIC SILT WITH SAND; moist, reddish brown, contains rock fragments	MH				S-02, SPT 10+17+21 REC=13", 72%	LL = 103 PL = 60 MC = 31.1% % Passing #200 = 82.5	
4.0	SANDY SILT; moist, reddish brown		540.0		5	S-03, SPT 9+18+21 REC=13", 72%		
						S-04, SPT 9+11+14 REC=14", 78%		
				C1	10	S-05, SPT 10+11+14 REC=11", 61%		
		ML						
					15	S-06, SPT 11+14+16 REC=10", 56%		
	Change: contains mica							
20.0			524.0		20	S-07, SPT 6+12+19 REC=13", 72%		

Bottom of Boring at 20.0 ft.
Boring terminated at selected depth.
Boring backfilled with cuttings upon completion.

Schnabel ENGINEERING — **TEST BORING LOG**

Project: Zion Crossroads Water and Sewer System
Route 250 and Route 15
Fluvanna County, Virginia

Boring Number: **B-95**
Contract Number: 16C13175 Task 05
Sheet: 1 of 1

Contractor: Ayers & Ayers, Inc.
Powhatan, Virginia
Contractor Foreman: J. Ayers Jr.
Schnabel Representative: B. Watson
Equipment: CME-45B (ATV)
Method: 2-1/4" I.D. Hollow Stem Auger
Hammer Type: Safety Hammer (140 lb)
Dates Started: 9/20/17 **Finished:** 9/20/17
Location: See Location Plan
Ground Surface Elevation: 543± (ft) **Total Depth:** 10.0 ft

Groundwater Observations

	Date	Time	Depth	Casing	Caved
Encountered	9/20	---	Dry	---	---
Completion	9/20	---	Dry	---	---
Casing Pulled	9/20	---	Dry	---	6.0'

DEPTH (ft)	MATERIAL DESCRIPTION	SYMBOL	ELEV (ft)	STRATUM	SAMPLING DEPTH	SAMPLING DATA	TESTS	REMARKS
0.5	Rootmat and topsoil; 6 inches		542.5					RESIDUUM
	ELASTIC SILT; moist, reddish brown	MH		C1	5	S-01, SPT 3+6+11 REC=8", 44% S-02, SPT 9+15+18 REC=9", 50% S-03, SPT 7+9+11 REC=14", 78%	LL = 97 PL = 65 MC = 35.4% % Passing #200 = 93.0 MC = 30.1%	
7.0	SANDY SILT; moist, reddish brown with gray	ML	536.0			S-04, SPT 11+12+15 REC=13", 72%		
	Change: reddish brown				10	S-05, SPT 9+16+18 REC=12", 67%		
10.0			533.0					

Bottom of Boring at 10.0 ft.
Boring terminated at selected depth.
Boring backfilled with cuttings upon completion.

TEST BORING LOG 16C13175 COMBINED LOGS.GPJ SCHNABEL DATA TEMPLATE 2008_07_06.GDT 10/9/17

Schnabel ENGINEERING — **TEST BORING LOG**

Project: Zion Crossroads Water and Sewer System
Route 250 and Route 15
Fluvanna County, Virginia

Boring Number: **B-96**
Contract Number: 16C13175 Task 05
Sheet: 1 of 1

Contractor: Ayers & Ayers, Inc.
Powhatan, Virginia
Contractor Foreman: J. Ayers Jr.
Schnabel Representative: B. Watson
Equipment: CME-45B (ATV)
Method: 2-1/4" I.D. Hollow Stem Auger

Hammer Type: Safety Hammer (140 lb)
Dates Started: 9/20/17 **Finished:** 9/20/17
Location: See Location Plan

Ground Surface Elevation: 544± (ft) **Total Depth:** 20.0 ft

Groundwater Observations

	Date	Time	Depth	Casing	Caved
Encountered	9/20	---	Dry	---	---
Completion	9/20	---	Dry	---	---
Casing Pulled	9/20	---	Dry	---	12.5'

DEPTH (ft)	MATERIAL DESCRIPTION	SYMBOL	ELEV (ft)	STRATUM	SAMPLING DEPTH	SAMPLING DATA	TESTS	REMARKS
0.5	Rootmat and topsoil; 6 inches		543.5					RESIDUUM
	ELASTIC SILT WITH SAND; moist, reddish brown	MH				S-01, SPT 10+12+15 REC=9", 50%		
						S-02, SPT 10+17+22 REC=13", 72%		
					5	S-03, SPT 9+18+20 REC=14", 78%		
7.0	SANDY SILT; moist, reddish brown, contains mica		537.0			S-04, SPT 10+12+17 REC=16", 89%		
				C1	10	S-05, SPT 10+14+19 REC=15", 83%		
		ML						
					15	S-06, SPT 6+13+15 REC=13", 72%		
						S-07, SPT 11+16+20 REC=13", 72%		
20.0			524.0		20			

Bottom of Boring at 20.0 ft.
Boring terminated at selected depth.
Boring backfilled with cuttings upon completion.

APPENDIX B

SOIL LABORATORY TEST DATA

Summary of Laboratory Tests
Gradation Curves
Atterberg Limits
Moisture Density Relationship
California Bearing Ratio Tests

©2017 All Rights Reserved

Summary Of Laboratory Tests

Project Number: 16C13175 Task 05

Boring No.	Sample Depth ft / Elevation ft	Sample Type	Description of Soil Specimen	Testing Laboratory	Stratum	Natural Moisture (%)	Liquid Limit	Plastic Limit	Plasticity Index	% Passing No. 200 Sieve	% Passing No. 40 Sieve	% Retained No. 4 Sieve	Maximum Dry Density (pcf)	Optimum Moisture Content (%)	CBR Value	CBR Percent Swell
B-75	2.0 - 5.5 / 542.5 - 539.0	Bulk	ELASTIC SILT WITH SAND (MH, A-7-5), contains rock fragments, reddish brown	RICH	C1	31.1	53	35	18	78.9	91.5	1.9	102.1	19.7	3.4	3.8
B-77	4.0 - 5.5 / 540.0 - 538.5	Jar	ELASTIC SILT (MH), reddish brown	CVL	C1	31.1	69	45	24	89.7	97.8	0.0	--	--	--	--
B-77	9.0 - 10.5 / 535.0 - 533.5	Jar	SILT WITH SAND (ML), reddish brown	CVL	C1	19.3	49	36	13	84.5	97.9	0.0	--	--	--	--
B-78	2.0 - 3.5 / 542.0 - 540.5	Jar	ELASTIC SILT (MH), reddish brown	CVL	C1	36.0	80	48	32	91.5	98.0	0.0	--	--	--	--
B-93	4.0 - 5.5 / 540.0 - 538.5	Jar	ELASTIC SILT (MH), reddish brown	RICH	C1	31.1	83	46	37	89.4	96.3	0.0	--	--	--	--
B-94	2.0 - 3.5 / 542.0 - 540.5	Jar	ELASTIC SILT WITH SAND (MH), contains rock fragments, reddish brown	RICH	C1	31.1	103	60	43	82.5	89.0	4.8	--	--	--	--
B-95	2.0 - 3.5 / 541.0 - 539.5	Jar	ELASTIC SILT (MH), reddish brown	RICH	C1	35.4	97	65	32	93.0	97.9	0.0	--	--	--	--

Notes:
1. Soil tests in general accordance with ASTM standards.
2. Soil classifications are in general accordance with ASTM D2487(as applicable), based on testing indicated and visual classification.
3. Key to abbreviations: NP=Non-Plastic; -- indicates no test performed

Schnabel ENGINEERING

Project: Zion Crossroads Water and Sewer System
Route 250 and Route 15
Fluvanna County, VA

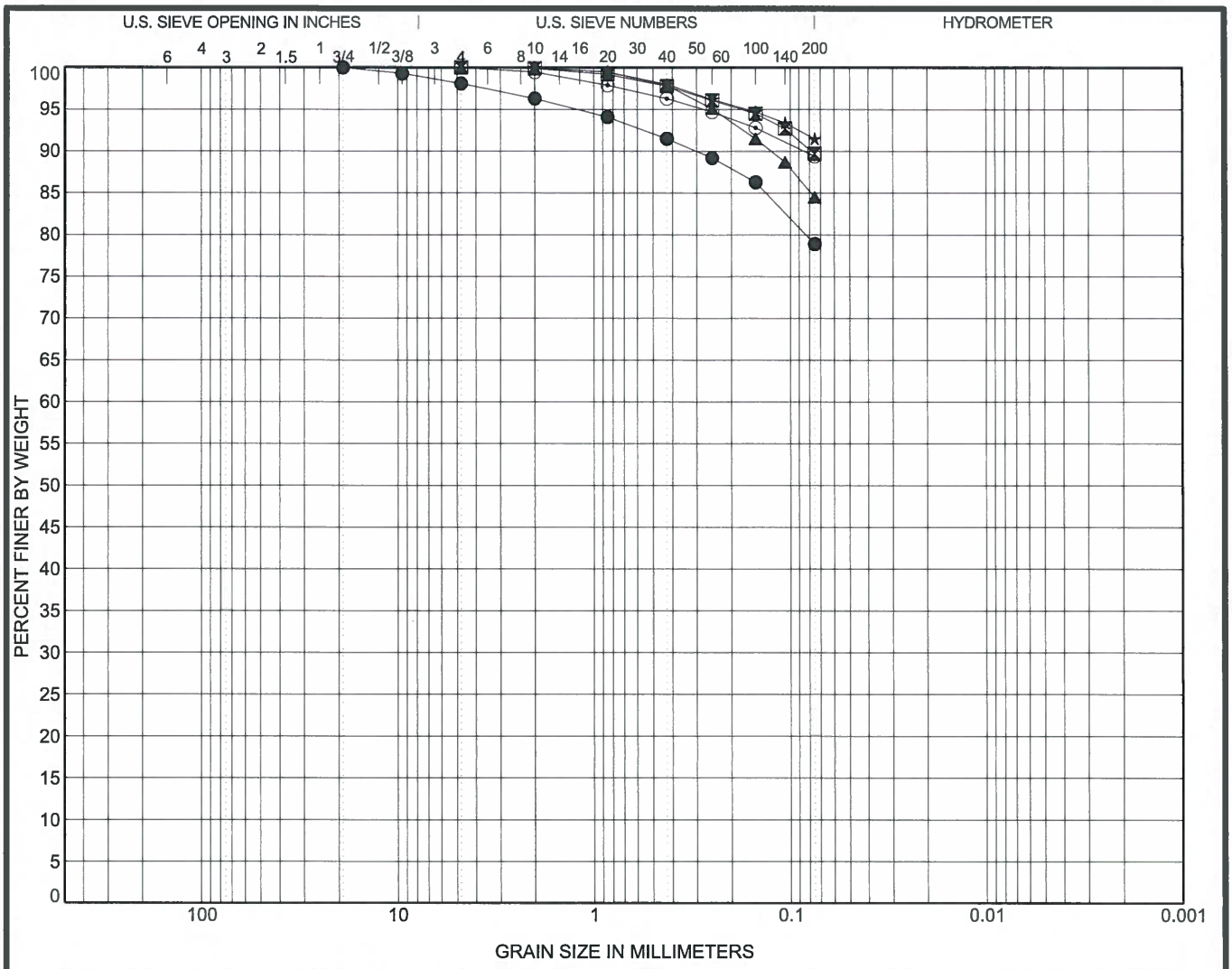

COBBLES	GRAVEL		SAND			SILT OR CLAY
	coarse	fine	coarse	medium	fine	

	Specimen		Sample Description	LL	PL	PI	Cc	Cu
●	B-75	2.0 ft	ELASTIC SILT WITH SAND (MH, A-7-5), contains rock fragments, reddish brown	53	35	18	--	--
⊠	B-77	4.0 ft	ELASTIC SILT (MH), reddish brown	69	45	24	--	--
▲	B-77	9.0 ft	SILT WITH SAND (ML), reddish brown	49	36	13	--	--
★	B-78	2.0 ft	ELASTIC SILT (MH), reddish brown	80	48	32	--	--
⊙	B-93	4.0 ft	ELASTIC SILT (MH), reddish brown	83	46	37	--	--

	Specimen		Test Method	Testing Lab	D100	D60	D30	D10	%Gravel	%Sand	%Silt	%Clay
●	B-75	2.0 ft	ASTM D422	RICH	19	--	--	--	1.9	19.2	78.9	
⊠	B-77	4.0 ft	ASTM D1140	CVL	4.75	--	--	--	0.0	10.3	89.7	
▲	B-77	9.0 ft	ASTM D1140	CVL	4.75	--	--	--	0.0	15.5	84.5	
★	B-78	2.0 ft	ASTM D1140	CVL	2	--	--	--	0.0	8.5	91.5	
⊙	B-93	4.0 ft	ASTM D422	RICH	4.75	--	--	--	0.0	10.6	89.4	

Schnabel ENGINEERING

GRADATION CURVES

Project: Zion Crossroads Water and Sewer System
Route 250 and Route 15
Fluvanna County, VA

Contract: 16C13175 Task 05

SIEVE 5 SHEET 16C13175 COMBINED LOGS.GPJ SCHNABEL DATA TEMPLATE 2010 02 25.GDT 10/9/17

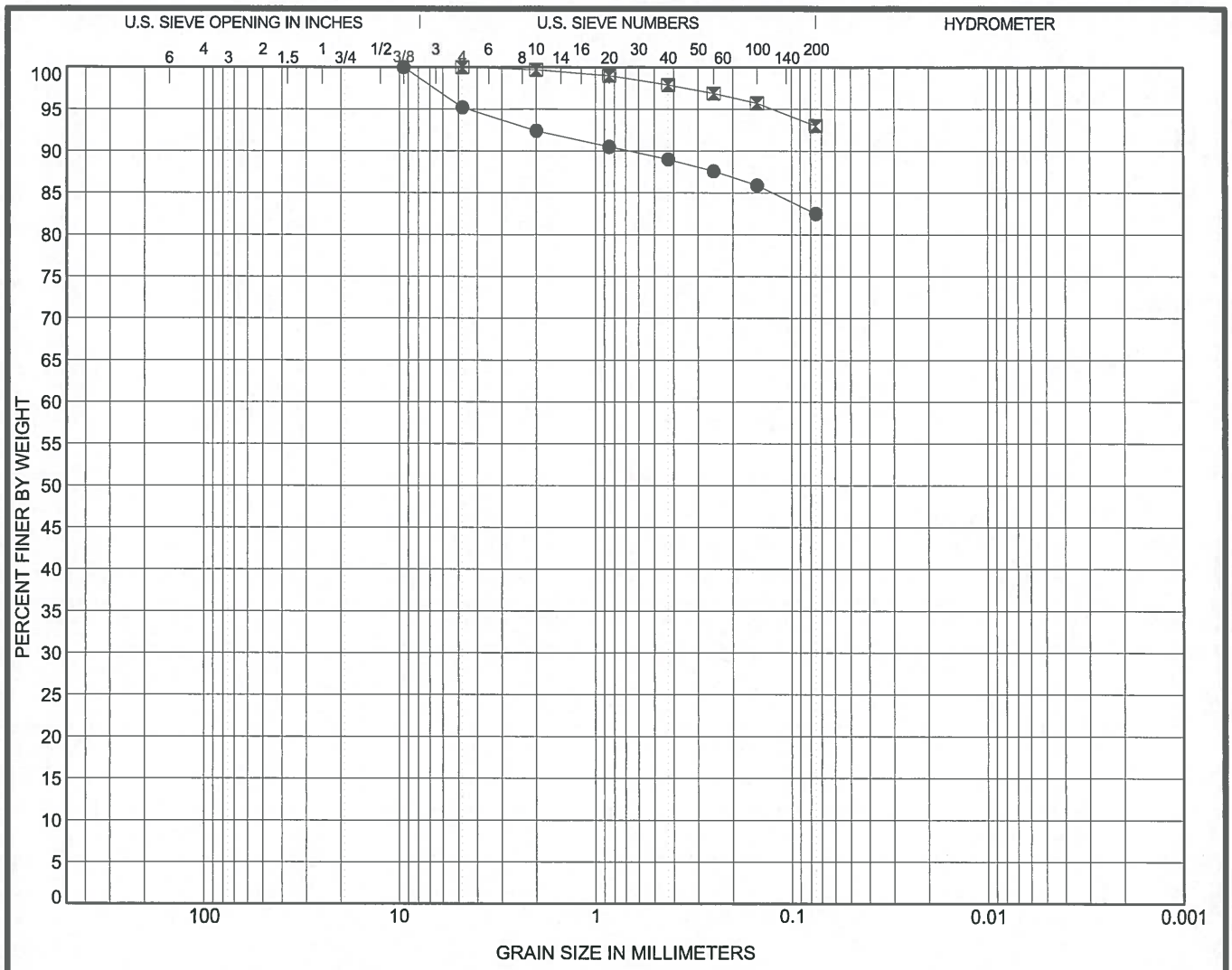

COBBLES	GRAVEL		SAND			SILT OR CLAY
	coarse	fine	coarse	medium	fine	

	Specimen		Sample Description	LL	PL	PI	Cc	Cu
●	B-94	2.0 ft	ELASTIC SILT WITH SAND (MH), contains rock fragments, reddish brown	103	60	43	--	--
⊠	B-95	2.0 ft	ELASTIC SILT (MH), reddish brown	97	65	32	--	--

	Specimen		Test Method	Testing Lab	D100	D60	D30	D10	%Gravel	%Sand	%Silt	%Clay
●	B-94	2.0 ft	ASTM D422	RICH	9.5	--	--	--	4.8	12.7	82.5	
⊠	B-95	2.0 ft	ASTM D422	RICH	4.75	--	--	--	0.0	7.0	93.0	

Schnabel ENGINEERING

GRADATION CURVES

Project: Zion Crossroads Water and Sewer System
Route 250 and Route 15
Fluvanna County, VA

Contract: 16C13175 Task 05

SIEVE 5 SHEET 16C13175 COMBINED LOGS.GPJ SCHNABEL DATA TEMPLATE 2010 02 25.GDT 10/9/17

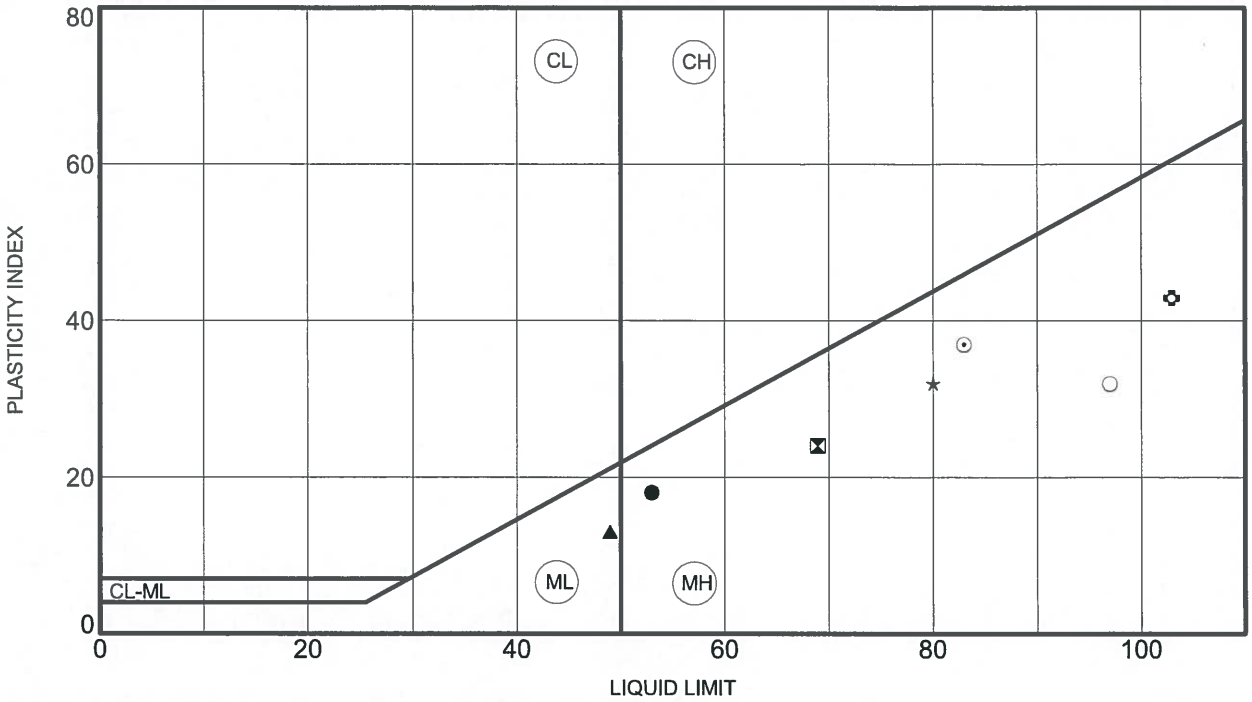

PLOTTED DATA REPRESENTS SOIL PASSING NO. 40 SIEVE

	Specimen		LL	PL	PI	Fines	Testing Lab	Description
●	B-75	2.0 ft	53	35	18	79	RICH	ELASTIC SILT WITH SAND (MH, A-7-5), contains rock fragments, reddish brown
⧗	B-77	4.0 ft	69	45	24	90	CVL	ELASTIC SILT (MH), reddish brown
▲	B-77	9.0 ft	49	36	13	85	CVL	SILT WITH SAND (ML), reddish brown
★	B-78	2.0 ft	80	48	32	92	CVL	ELASTIC SILT (MH), reddish brown
⊙	B-93	4.0 ft	83	46	37	89	RICH	ELASTIC SILT (MH), reddish brown
✿	B-94	2.0 ft	103	60	43	83	RICH	ELASTIC SILT WITH SAND (MH), contains rock fragments, reddish brown
○	B-95	2.0 ft	97	65	32	93	RICH	ELASTIC SILT (MH), reddish brown

Schnabel ENGINEERING

ATTERBERG LIMITS

Project: Zion Crossroads Water and Sewer System
Route 250 and Route 15
Fluvanna County, VA

Contract: 16C13175 Task 05

ATTERBERG LIMITS 16C13175 COMBINED LOGS.GPJ SCHNABEL DATA TEMPLATE 2008 04 22.GDT 10/9/17

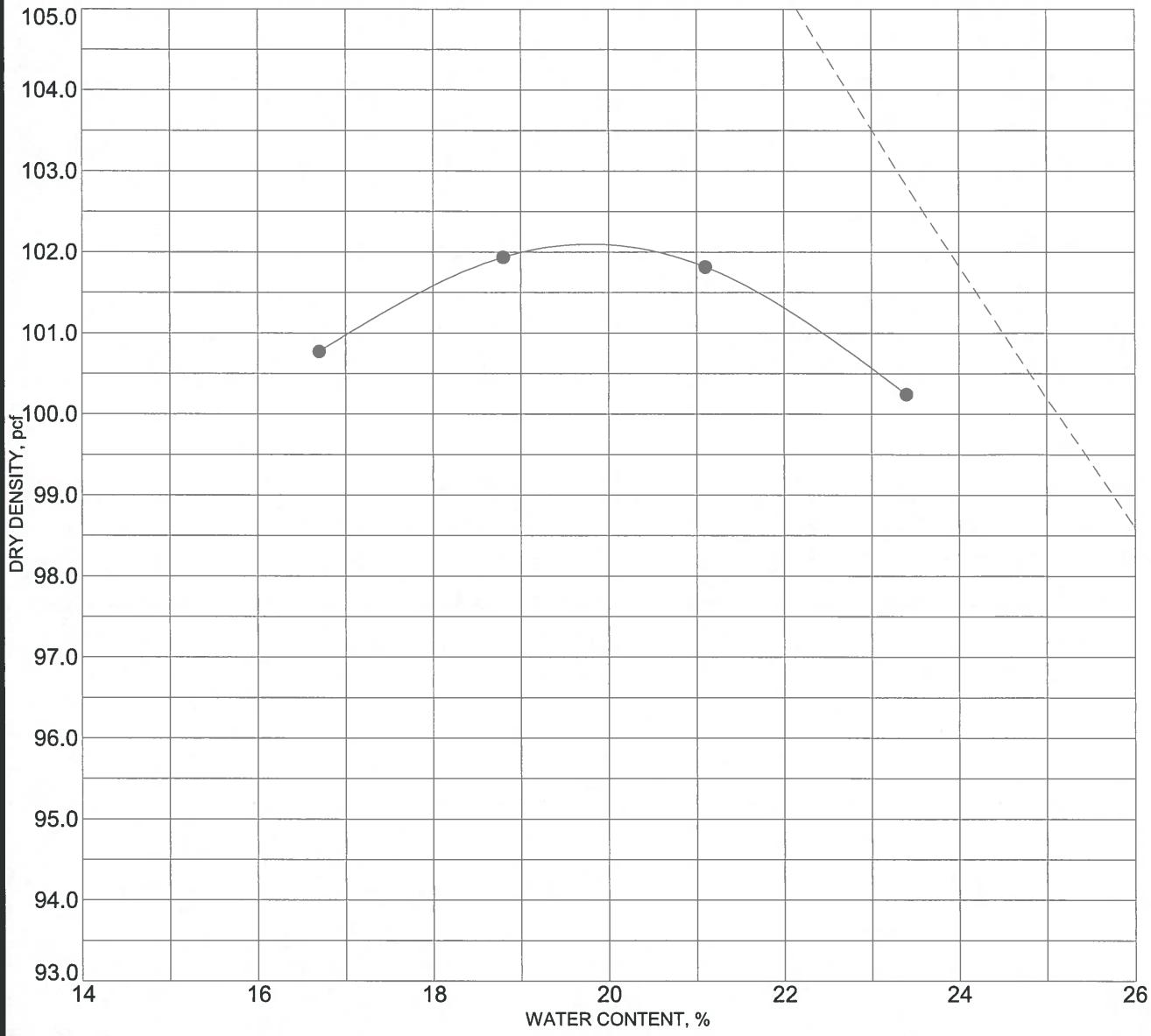

Sample Description:	ELASTIC SILT WITH SAND (MH, A-7-5), contains rock fragments, reddish brown	Assumed Specific Gravity:	2.68
		Max. Dry Density (pcf):	102.1
		Opt. Moisture (%):	19.7
Sample Source:	B-75, 2.0 ft		
Test Methods:	ASTM D698 Method B		

Liquid Limit (LL):	53
Plasticity Index (PI):	18
% Retained #4 Sieve:	1.9
% Passing # 200 Sieve:	78.9

Comments:
Bulk sample obtained from auger cuttings over the depth interval 2.0 to 5.5 feet

Date: 2-8-17 Reviewed By: DS

Schnabel ENGINEERING

MOISTURE DENSITY RELATIONSHIP

Project: Zion Crossroads Water and Sewer System
Route 250 and Route 15
Fluvanna County, VA

Contract: 16C13175 Task 5 **Testing Lab:** RICH

COMPACTION 16C13175 TASK 04 - ELEVATED WATER TANK.GPJ SCHNABEL DATA TEMPLATE 2008 04 22.GDT 2/17/17

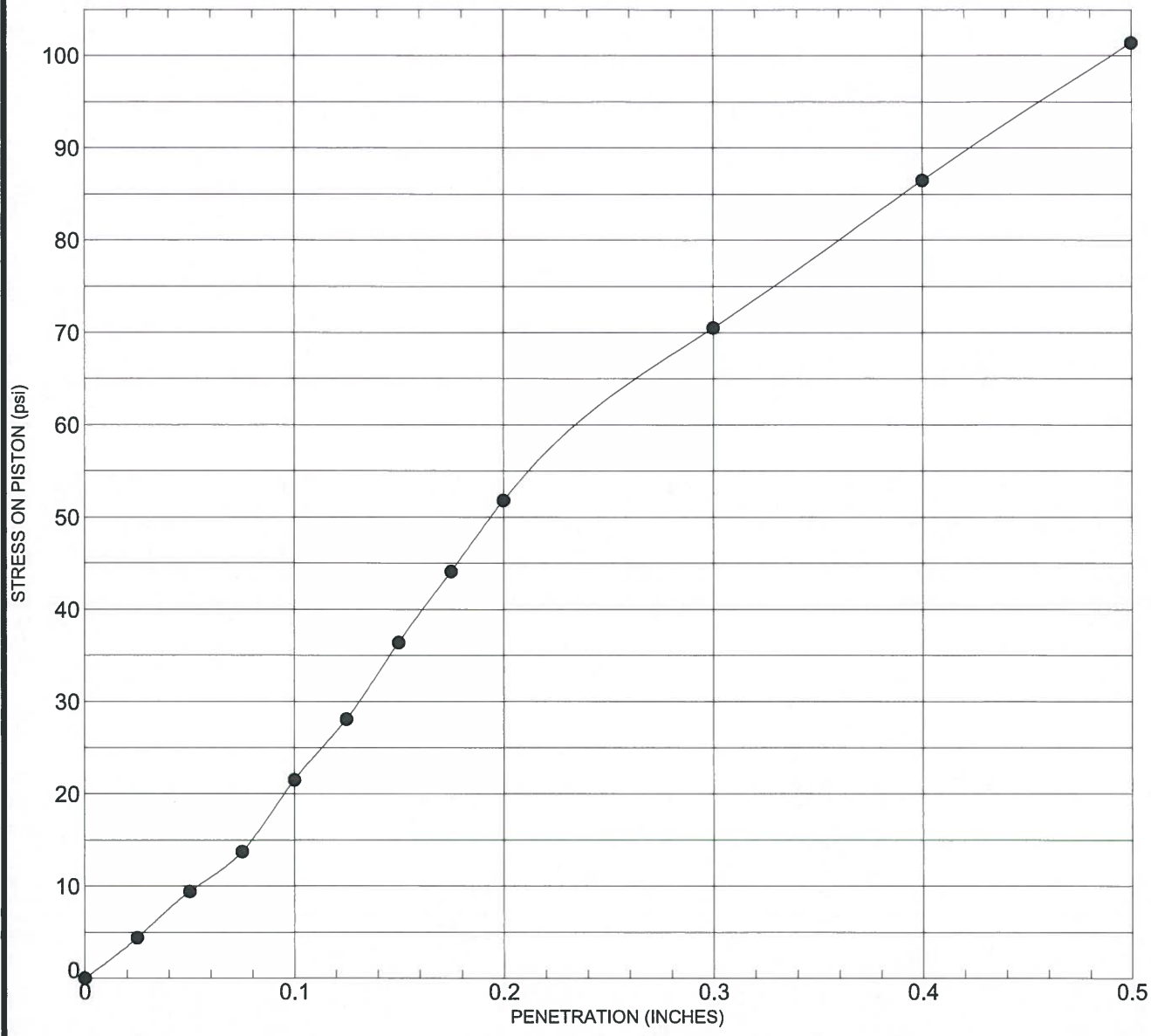

Sample Description:	ELASTIC SILT WITH SAND (MH, A-7-5), contains rock fragments, reddish brown
Sample Source:	B-75
Sample Depth:	2.0 ft
Test Method:	VTM-8

Dry Density Before Soaking (pcf):	101.3
Dry Density After Soaking (pcf):	97.6
Maximum Dry Density (pcf):	102.1
Moisture Content Before Soaking (%):	20.4
Moisture Content After Soaking (Avg) (%):	26.5
Moisture Content Top Inch After Soak (%):	32.6
Optimum Moisture Content (%):	19.7

Liquid Limit (LL):	53
Plasticity Index (PI):	18
% Retained #4 Sieve:	1.9
% Passing # 200 Sieve:	78.9

CBR:	3.4, Soaked
Surcharge (psf):	50
Swell (%):	3.8

Schnabel ENGINEERING

CALIFORNIA BEARING RATIO TEST

Project: Zion Crossroads Water and Sewer System
Route 250 and Route 15
Fluvanna County, VA

Contract: 16C13175 Task 5 **Testing Lab:** RICH

CBR SINGLE POINT 16C13175 TASK 04 - ELEVATED WATER TANK.GPJ SCHNABEL DATA TEMPLATE 2008 04 22.GDT 2/17/17

Exhibit I
Drawings

BOS 2019-01-09 p.654/1491

ZION CROSSROADS
ELEVATED WATER STORAGE TANK

FLUVANNA COUNTY DEPARTMENT OF PUBLIC WORKS

Drawing Index

GENERAL

G1.0 COVER SHEET
G2.0 GENERAL NOTES AND LEGEND

CIVIL

C1.0 SITE LAYOUT
C1.1 PIPING PLAN
C2.0 DETAILS
C2.1 DETAILS
C2.2 DETAILS
C3.0 GRADING AND EROSION & SEDIMENT CONTROL PLAN
C4.0 EROSION & SEDIMENT CONTROL NOTES
C4.1 EROSION & SEDIMENT CONTROL NOTES AND DETAILS

MECHANICAL

M1.0 TANK PIPING LAYOUT
M2.0 TANK ELEVATION AND ORIENTATION PLANS
M3.0 DETAILS
M3.1 DETAILS
M4.0 METER VAULT

STRUCTURAL

S1.0 GENERATOR PAD AND PLATFORM DETAIL

PROCESS AND INSTRUMENTATION

I1.0 PROCESS AND INSTRUMENTATION DIAGRAM

ELECTRICAL

E1.0 EST ELECTRICAL DIAGRAMS
E1.1 EST ELECTRICAL SCHEDULES AND NOTES
E1.2 EST ELECTRICAL VIEWS AND NOTES

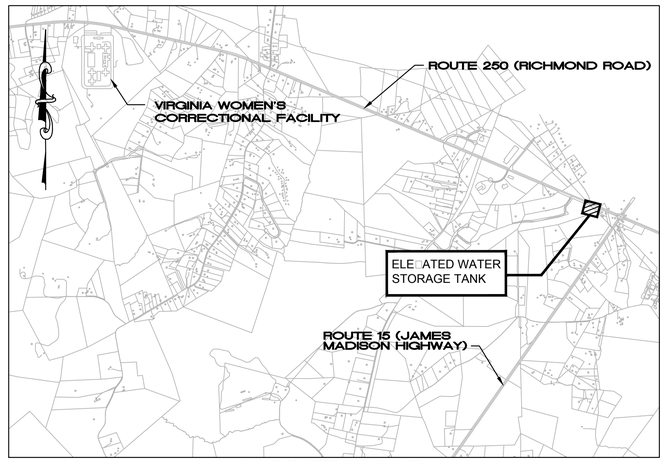

VICINITY MAP
SCALE : 1" = 2000'

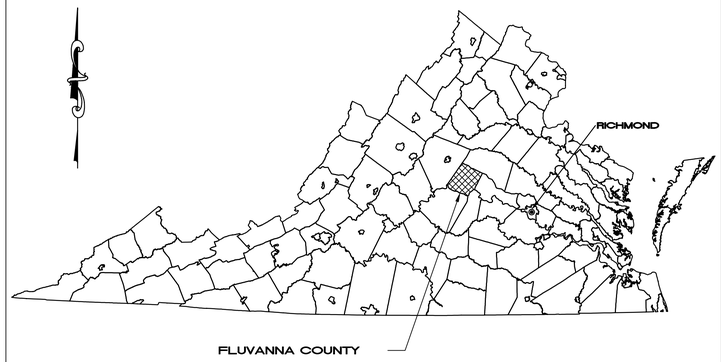

LOCATION MAP
NOT TO SCALE

THE DEWBERRY ENGINEERS INC. SEALING ENGINEER SHALL BE THE RESPONSIBLE LAND DISTURBER □RLD□FOR THIS PROJECT FOR APPRO□AL PURPOSES ONLY. ONCE THE PROJECT HAS BEEN AWARDED□ THE CONTRACTOR SHALL PRO□IDE AN RLD.

SUBMITTAL		SET NUMBER
☐ PRELIMINARY	☐ CONSTRUCTION	
☐ APPROVAL	☐ REVISION	
■ BIDDING	☐ RECORD	

Contacts:

OWNER:
Fluvanna County
Department of Public Works
Wayne Stephens, PE
P.O. Box 540
197 Main Street
Palmyra, Virginia 22963
PH. (434) 591-1925
FAX (434) 591-1924
wstephens@fluvannacounty.org

ENGINEER:
Dewberry Engineers Inc.
Dan Villhauer, P.E.
4805 Lake Brook Drive, Suite 200
Glen Allen, Virginia 23060
PH. (804) 290-7957
FAX (804) 290-7928
dvillhauer@dewberry.com

Dewberry

Dewberry Engineers Inc.
4805 Lake Brook Drive, Suite 200
Glen Allen, Virginia 23060
PHONE: 804.290.7957
FAX: 804.290.7928
www.dewberry.com

ZION CROSSROADS
ELEVATED WATER STORAGE TANK

FLUVANNA COUNTY
DEPARTMENT OF PUBLIC WORKS

FLUVANNA COUNTY, VA

KEY PLAN

SEAL

COMMONWEALTH OF VIRGINIA
DANYLO A. VILLIHAUER
Lic. No. 046419
5/4/2018
PROFESSIONAL ENGINEER

SCALE

No.	DATE	BY	Description

REVISIONS

DRAWN BY	BMM / JEH
APPROVED BY	DAV
CHECKED BY	BMM
DATE	MAY 2018

TITLE

COVER SHEET

PROJECT NO. 50078862

G1.0

NOTES

GENERAL

1. CONTRACTOR SHALL IMMEDIATELY REPORT ANY DISCREPANCIES BETWEEN EXISTING CONDITIONS AND CONTRACT DOCUMENTS TO THE ENGINEER.
2. EXISTING CONDITIONS ARE A COMBINATION OF AERIAL SURVEY AND SITE SURVEY PROVIDED BY BOWMAN ON DECEMBER 18, 2016.
3. THE "MISS UTILITY LAW" REQUIRES THE CONTRACTOR TO CALL (1–800–552–7001) AT LEAST 3 WORKING DAYS IN ADVANCE OF THE PLANNED WORK TO ALLOW TIME FOR MARKING, THAT THE MARKS BE RESPECTED AND PROTECTED, AND THAT EXCAVATION BE COMPLETED CAREFULLY.
4. CONTRACTOR SHALL BE RESPONSIBLE FOR SITE SECURITY AND JOB SAFETY. CONSTRUCTION WORK AND MATERIALS SHALL COMPLY WITH LOCAL REGULATIONS, STATE OF VIRGINIA REGULATIONS AND CODES, AND O.S.H.A. STANDARDS.
5. AREAS DISTURBED DURING CONSTRUCTION AND NOT RESTORED WITH IMPERVIOUS SURFACES (BUILDINGS, PAVEMENT, WALKS, ETC.) SHALL FOLLOW DETAIL PROVIDED BY VIRGINIA EROSION AND SEDIMENT CONTROL HANDBOOK FOR SITE SPECIFIC SEEDING MIXTURES IN ACCORDANCE WITH STANDARD & SPECIFICATION 3.32 UNLESS OTHERWISE STATED IN PROJECT SPECIFICATIONS.
6. UPON AWARD OF CONTRACT, CONTRACTOR SHALL MAKE NECESSARY CONSTRUCTION NOTIFICATIONS AND APPLY FOR AND OBTAIN NECESSARY PERMITS, PAY FEES, AND POST BONDS ASSOCIATED WITH THE WORK INDICATED ON THE DRAWINGS, IN THE SPECIFICATIONS, AND IN THE CONTRACT DOCUMENTS. DO NOT CLOSE OR OBSTRUCT ROADWAYS LEADING TO PROJECT SITE.
7. AREAS OUTSIDE THE LIMITS OF PROPOSED WORK DISTURBED BY THE CONTRACTOR'S OPERATION SHALL BE RESTORED BY THE CONTRACTOR TO THEIR ORIGINAL CONDITION AT THE CONTRACTOR'S EXPENSE.
8. IN THE EVENT THAT SUSPECTED CONTAMINATED SOIL, GROUNDWATER, AND OTHER MEDIA ARE ENCOUNTERED DURING EXCAVATION AND CONSTRUCTION ACTIVITIES BASED ON VISUAL, OFACTOCRY (SMELL), OR OTHER EVIDENCE, THE CONTRACTOR SHALL STOP WORK IN THE VICINITY OF THE SUSPECT MATERIAL TO AVOID FURTHER SPREADING OF THE MATERIAL, AND SHALL NOTIFY THE ENGINEER IMMEDIATELY SO THAT THE APPROPRIATE TESTING AND SUBSEQUENT ACTION CAN BE TAKEN.
9. CONTRACTOR SHALL PREVENT DUST, SEDIMENT, AND DEBRIS FROM EXITING THE SITE AND SHALL BE RESPONSIBLE FOR CLEANUP, REPAIRS AND CORRECTIVE ACTION IF SUCH OCCURS.
10. DAMAGE RESULTING FROM CONSTRUCTION LOADS SHALL BE REPAIRED BY THE CONTRACTOR AT NO ADDITIONAL COST TO OWNER.
11. CONTRACTOR SHALL CONTROL STORMWATER RUNOFF DURING CONSTRUCTION TO PREVENT ADVERSE IMPACTS TO ON–SITE AND OFF–SITE AREAS, AND SHALL BE RESPONSIBLE TO REPAIR RESULTING DAMAGES, IF ANY, AT NO COST TO OWNER.
12. ALL CONTRACTOR LAYDOWN AREAS SHALL BE LOCATED WITHIN THE LIMITS OF DISTURBANCE LINE AS SHOWN ON THIS PLAN.
13. WHEN WORKING ADJACENT TO EXISTING STRUCTURES, POLES, ETC., CONTRACTOR SHALL USE WHATEVER METHODS THAT ARE NECESSARY TO PROTECT STRUCTURES FROM DAMAGE. REPLACEMENT OF DAMAGED STRUCTURES SHALL BE AT THE CONTRACTOR'S EXPENSE.
14. CONTRACTOR SHALL REMOVE ALL FENCES, SHRUBS, AND OTHER ENCUMBRANCES DISTURBED DURING CONSTRUCTION AND REPLACE OR RESTORE OUTSIDE OF VDOT RIGHT OF WAY.
15. CONTRACTOR SHALL ADJUST ALL APPURTENANCES AS REQUIRED TO MATCH NEW GRADES. THE EXACT LOCATION OF APPURTENANCES SHALL BE COORDINATED WITH THE OWNER.
16. CONTRACTOR SHALL VERIFY ALL DIMENSIONS, CONDITIONS, EXISTING INVERTS, ELEVATIONS, ETC. AND, NOTIFY ENGINEER IN WRITING OF ANY DISCREPANCIES PRIOR TO CONTINUING CONSTRUCTION OF THE WORK INVOLVED.
17. CONTRACTOR SHALL COORDINATE ALL SHUT DOWNS WITH FLUVANNA COUNTY AT LEAST 48 HOURS IN ADVANCE. THE MAXIMUM DURATION OF ANY SHUT DOWN SHALL NOT EXCEED 48 HOURS.

EXISTING CONDITIONS

1. HORIZONTAL DATUM IS NAD 83 AND THE VERTICAL DATUM IS NAVD 88 BASED ON A GPS SURVEY BY BOWMAN CONSULTING GROUP, LTD TIED TO NGS AND/OR COUNTY GPS MONUMENTS.
2. THE INFORMATION AND DATA SHOWN OR INDICATED WITH RESPECT TO EXISTING UNDERGROUND FACILITIES AT OR CONTIGUOUS TO THE SITE IS BASED ON INFORMATION AND DATA FURNISHED TO THE OWNER OR ENGINEER BY THE OWNERS OF SUCH UNDERGROUND FACILITIES OR BY OTHERS. THE OWNER AND ENGINEER SHALL NOT BE RESPONSIBLE FOR THE ACCURACY OR COMPLETENESS OF ANY SUCH INFORMATION OR DATA. THE CONTRACTOR SHALL HAVE FULL RESPONSIBILITY FOR REVIEWING AND CHECKING ALL SUCH INFORMATION AND DATA, FOR LOCATING ALL UNDERGROUND FACILITIES SHOWN OR INDICATED, FOR COORDINATION OF THE WORK WITH THE OWNERS OF SUCH UNDERGROUND FACILITIES DURING CONSTRUCTION, FOR THE SAFETY AND PROTECTION THEREOF, AND REPAIRING ANY DAMAGE THERETO RESULTING FROM THE WORK, ALL OF WHICH WILL BE AT NO ADDITIONAL COST TO THE OWNER. CONTRACTOR SHALL CONTACT "MISS UTILITY" OF VIRGINIA AT 1–800–552–7001 PRIOR TO START OF CONSTRUCTION.

GRADING

1. PRIOR TO START OF CONSTRUCTION, CONTRACTOR SHALL VERIFY EXISTING SURFACE ELEVATIONS TO ASSURE PROPER TRANSITIONS BETWEEN EXISTING AND PROPOSED FACILITIES.
2. ALL CUT OR FILL SLOPES SHALL BE 3:1 OR FLATTER UNLESS OTHERWISE NOTED.
3. EXISTING GRADE CONTOURS SHOWN AT 1 FOOT INTERVALS.
4. PROPOSED GRADE CONTOURS SHOWN AT 1 FOOT INTERVALS, UNLESS OTHERWISE NOTED.
5. IF ANY EXISTING STRUCTURES TO REMAIN ARE DAMAGED DURING CONSTRUCTION IT SHALL BE THE CONTRACTORS RESPONSIBILITY TO REPAIR AND/OR REPLACE THE EXISTING STRUCTURE AS NECESSARY TO RETURN IT TO EXISTING CONDITIONS OR BETTER.
6. CONTRACTOR SHALL ASSURE POSITIVE DRAINAGE AWAY FROM STRUCTURES AND ON ALL VEGETATION, PAVED, AND GRAVEL AREAS.
7. ALL UNSURFACED AREAS DISTURBED BY GRADING OPERATION SHALL RECEIVE 6 INCHES OF TOPSOIL. CONTRACTOR SHALL STABILIZE DISTURBED AREAS IN ACCORDANCE WITH EROSION AND SEDIMENT CONTROL PLAN UNTIL A HEALTHY STAND OF VEGETATION IS OBTAINED.

LAYOUT AND MATERIALS

1. ANY PROPERTY MONUMENTATION DISTURBED DURING CONSTRUCTION SHALL BE SET OR RESET BY A PROFESSIONAL LICENSED SURVEYOR PAID BY THE CONTRACTOR AT NO EXPENSE TO THE OWNER.
2. PRIOR TO START OF CONSTRUCTION, CONTRACTOR SHALL VERIFY EXISTING IMPROVEMENTS TO ASSURE PROPER TRANSITIONS BETWEEN EXISTING AND PROPOSED FACILITIES.
3. SYMBOLS AND LEGENDS OF PROJECT FEATURES ARE GRAPHIC REPRESENTATIONS AND ARE NOT NECESSARILY SCALED TO THEIR ACTUAL DIMENSIONS OR LOCATIONS ON THE DRAWINGS. THE CONTRACTOR SHALL REFER TO THE DETAIL SHEET DIMENSIONS, MANUFACTURER'S LITERATURE, SHOP DRAWINGS AND FIELD MEASUREMENTS OF SUPPLIED PRODUCTS FOR LAYOUT OF THE PROJECT FEATURES.
4. CONTRACTOR SHALL NOT RELY SOLEY ON ELECTRONIC VERSIONS OF PLANS, SPECIFICATIONS AND DATA FILES THAT ARE OBTAINED FROM THE DESIGNERS, BUT SHALL VERIFY LOCATION OF PROJECT FEATURES IN ACCORDANCE WITH THE PAPER COPIES OF THE PLANS AND SPECIFICATIONS THAT ARE SUPPLIED AS PART OF THE CONTRACT DOCUMENTS.

UTILITIES

1. THE CONTRACTOR MUST CALL "MISS UTILITY" (1–800–552–7001) AT LEAST 72 HOURS BEFORE EXCAVATION TO REQUEST FIELD LOCATION OF UTILITIES.
2. THE LOCATIONS, SIZE AND TYPES OF EXISTING UTILITIES ARE SHOWN AS AN APPROXIMATE REPRESENTATION ONLY. THE OWNER OR ITS REPRESENTATIVE(S) HAVE NOT INDEPENDENTLY VERFIED THIS INFORMATION AS SHOWN ON THE PLANS. THE UTILITY INFORMATION SHOWN DOES NOT GUARANTEE THE ACTUAL EXISTENCE, SERVICEABILITY, OR OTHER DATA CONCERNING THE UTILITIES, NOR DOES IT GUARANTEE AGAINST THE POSSIBILITY THAT ADDITIONAL UTILITIES MAY BE PRESENT THAT ARE NOT SHOWN ON THE PLANS. PRIOR TO ORDERING MATERIALS AND BEGINNING CONSTRUCTION, THE CONTRACTOR SHALL VERIFY AND DETERMINE THE EXACT LOCATIONS, SIZES AND ELEVATIONS OF THE POINTS OF CONNECTIONS TO EXISTING UTILITIES AND SHALL CONFIRM THAT THERE ARE NO INTERFERENCES WITH EXISTING UTILITIES AND THE PROPOSED UTILITY ROUTES, INCLUDING ROUTES WITHIN PUBLIC RIGHTS OF WAY.
3. WHERE AN EXISTING UTILITY IS FOUND TO CONFLICT WITH THE PROPOSED WORK, OR EXISTING CONDITIONS DIFFER FROM THOSE SHOWN SUCH THAT THE WORK CANNOT BE COMPLETED AS INTENDED, THE LOCATION, ELEVATION, AND SIZE OF THE UTILITY SHALL BE ACCURATELY DETERMINED WITHOUT DELAY BY THE CONTRACTOR, AND THE INFORMATION FURNISHED IN WRITING TO THE OWNER'S REPRESENTATIVE(S) FOR THE RESOLUTION OF THE CONFLICT. CONTRACTOR'S FAILURE TO NOTIFY PRIOR TO PERFORMING ADDITIONAL WORK RELEASES OWNER FROM OBLIGATIONS FOR ADDITIONAL PAYMENTS WHICH OTHERWISE MAY BE WARRANTED TO RESOLVE THE CONFLICT.
4. CONTRACTOR SHALL NOTIFY AND COORDINATE ALL WORK INVOLVING EXISTING UTILITIES WITH UTILITY OWNER'S, 72 HOURS PRIOR TO START OF CONSTRUCTION.
5. CONTRACTOR SHALL NOTIFY THE UTILITY AUTHORITY'S INSPECTOR 72 HOURS PRIOR TO AND RECEIVE APPROVAL BEFORE CONNECTING TO ANY EXISTING LINE.
6. LINES UNDERGROUND SHALL BE INSTALLED, INSPECTED AND APPROVED PRIOR TO BACKFILLING.
7. ALL PIPE FITTINGS HAVE NOT BEEN SHOWN. CONTRACTOR SHALL PROVIDE/INSTALL ALL FITTINGS, FLEX COUPLINGS, JOINT RESTRAINT, THRUST BLOCKING, ETC. NECESSARY FOR COMPLETE INSTALLATION. PROVIDE CLEARANCES AS NEEDED FOR FUTURE ACCESSIBILITY.
8. PROPOSED EQUIPMENT AND PIPING LAYOUT IS BASED ON EQUIPMENT SPECIFIED. CONTRACTOR SHALL VERIFY ALL LAYOUT DIMENSIONS AND SUBMIT SHOP DRAWINGS FOR APPROVAL PRIOR TO INSTALLATION.

PIPE SCHEDULE

CATEGORY	SIZES	MATERIAL[1,2]	PIPE [1]		FITTINGS[1]
			RATING	JOINTS	
POTABLE WATER PIPING (EXPOSED OR INSIDE BUILDINGS)	UNDER 3"	304 SS	304 SS	THREADED	THREADED
POTABLE WATER PIPING (EXPOSED OR INSIDE BUILDINGS)	3" AND UP	DUCTILE IRON	CLASS 53	FLANGED	FLANGED
POTABLE WATER PIPING (BURIED)	UNDER 3"	HDPE	DR 9.0	ELECTROFUSION WELDED	ELECTROFUSION WELDED
POTABLE WATER PIPING (BURIED)	3" AND UP	DUCTILE IRON	CLASS 52	MECHANICAL JOINT (RESTRAINED)	MECHANICAL JOINT (RESTRAINED)
TANK FLOOR DRAIN PIPING	ALL	DUCTILE IRON	CLASS 52	PUSH JOINT	MECHANICAL JOINT
OVERFLOW GRAVITY PIPING	3" AND UP	RCP	CLASS V	BELL AND SPIGOT (O–RING)	N/A
SUMP PUMP PIPING (EXPOSED)	UNDER 3"	PVC	SCH 80	SOLVENT WELD	SOLVENT WELD
SUMP PUMP PIPING (BURIED)	UNDER 3"	HDPE	DR 11	ELECTROFUSION WELDED	ELECTROFUSION WELDED
INSTRUMENTATION PIPING	1"	304 SS	304 SS	THREADED	THREADED

1. UNLESS INDICATED OTHERWISE ON THE PLANS.
2. ALL PIPING ENCASED IN CONCRETE SHALL BE DUCTILE IRON.
3. INLET AND OUTLET RISER PIPE SHALL BE BY THE TANK MANUFACTURER.

LEGEND

EXISTING VEGETATION AND DRIP LINE
EXISTING TREELINE
UGW — EXISTING UNDERGROUND WATER
EXISTING STORM DRAIN
FM — EXISTING SANITARY FORCE MAIN
OHE — EXISTING OVERHEAD ELECTRIC/UTILITY
OHT — EXISTING OVERHEAD TELEPHONE
UGT — EXISTING UNDERGROUND TELEPHONE
FO — EXISTING UNDERGROUND FIBER OPTIC
EXISTING MAJOR CONTOUR
EXISTING MINOR CONTOUR
EXISTING EDGE OF GRAVEL/PAVEMENT
EXISTING PROPERTY LINE
EXISTING UTILITY EASEMENT
EXISTING TELEPHONE EASEMENT
EXISTING WELL
EXISTING WATER VALVE
EXISTING BUILDING
EXISTING IRON ROD OR PIPE FOUND
EXISTING GUY WIRE
EXISTING POWER POLE
EXISTING COMMUNICATIONS PEDESTAL
BENCHMARK
EXISTING MAILBOX
EXISTING SIGN
EXISTING TELEPHONE BOX
EXISTING SANITARY MANHOLE
SB–01 — SOIL BORING
PROPOSED TREELINE
PROPOSED EDGE OF MULCH AREA
PROPOSED CHAIN LINK FENCE
PROPOSED DRAIN LINE
PROPOSED WATERLINE
PROPOSED FIRE HYDRANT
PROPOSED YARD HYDRANT
PROPOSED BOLLARD
PROPOSED LIGHT POLE
PROPOSED FITTING
PROPOSED REDUCER
C.O. — PROPOSED CLEANOUT
PROPOSED BUTTERFLY VALVE
PROPOSED GATE VALVE
PROPOSED PLUG VALVE
PROPOSED FLOW DIRECTION
PROPOSED GRAVEL
4 — PROPOSED CONCRETE PAVEMENT

AGT	ABOVE GROUND TANK	INV.	INVERT
ASS'Y	ASSEMBLY	IPF	IRON PIPE FOUND
B.O.	BLOW OFF	IRS	IRON ROD SET
BOT.	BOTTOM	LF	LINEAR FEET
BV	BUTTERFLY VALVE	LOD	LIMITS OF DISTURBANCE
C/L	CENTERLINE	LT.	LEFT
CL	CLASS	MH	MANHOLE
C.O.	CLEANOUT	MIN.	MINIMUM
CMP	CORRUGATED METAL PIPE	MJ	MECHANICAL JOINT
CNC.	CONCENTRIC	N/F	NOW OR FORMERLY
CONC.	CONCRETE	NIC	NOT IN CONTRACT
C.Y.	CUBIC YARDS	PE	PLAIN END
DI	DUCTILE IRON	R/W	RIGHT–OF–WAY
DR.	DRIVE	REQ'D	REQUIRED
EP	EDGE OF PAVEMENT	RCP	REINFORCED CONCRETE PIPE
EA	EACH	RT.	RIGHT
ECN.	ECCENTRIC	SS	SANITARY SEWER
EL.	ELEVATION	SD	STORM DRAIN
ESMT	EASEMENT	STA.	STATION
EX.	EXISTING	STM	STORM SEWER
FFE	FINISHED FLOOR ELEVATION	STMH	STORM MANHOLE
F	FLANGE JOINT	T	TELEPHONE
FM	SEWER FORCEMAIN	TC	TOP OF CURB
F.O.T.	FLAT ON TOP	TS&V	TAPPING SLEEVE AND VALVE
GV	GATE VALVE	TYP	TYPICAL
HORIZ.	HORIZONTAL	VERT.	VERTICAL

BOS 2019-01-09 p.655/1491

Dewberry

Dewberry Engineers Inc.
4805 Lake Brook Drive, Suite 200
Glen Allen, Virginia 23060
PHONE: 804.290.7957
FAX: 804.290.7928
www.dewberry.com

ZION CROSSROADS
ELEVATED WATER STORAGE TANK

FLUVANNA COUNTY
DEPARTMENT OF PUBLIC WORKS

FLUVANNA COUNTY, VA

KEY PLAN

SEAL

COMMONWEALTH OF VIRGINIA
DANYLO A. VILLIHAUER
Lic. No. 046419
5/4/2018
PROFESSIONAL ENGINEER

SCALE

No.	DATE	BY	Description

REVISIONS

DRAWN BY	BMM / JEH
APPROVED BY	DAV
CHECKED BY	BMM
DATE	MAY 2018

TITLE

GENERAL NOTES AND LEGEND

PROJECT NO. 50078862

G2.0

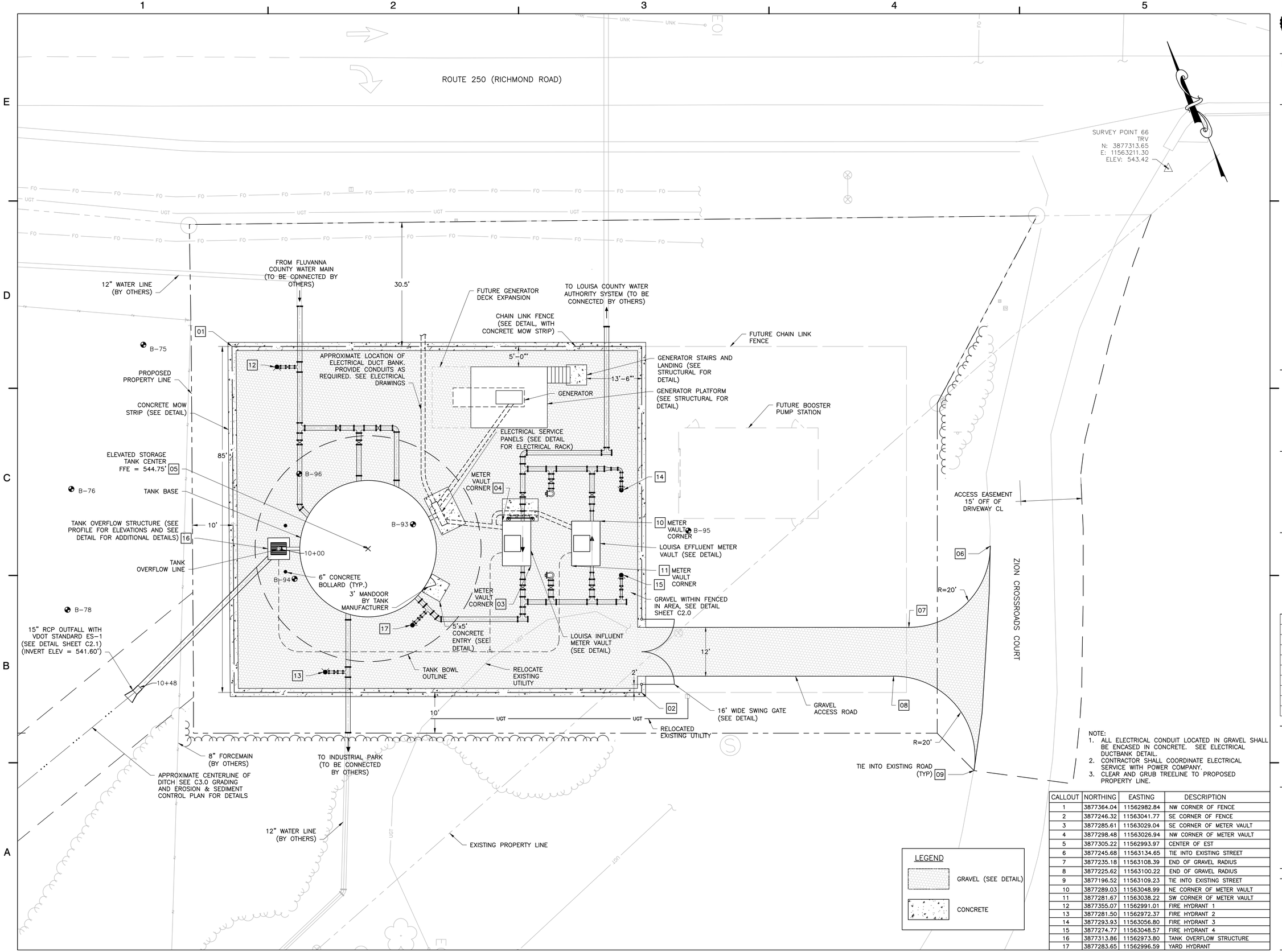

NOTE:
1. ALL ELECTRICAL CONDUIT LOCATED IN GRAVEL SHALL BE ENCASED IN CONCRETE. SEE ELECTRICAL DUCTBANK DETAIL.
2. CONTRACTOR SHALL COORDINATE ELECTRICAL SERVICE WITH POWER COMPANY.
3. CLEAR AND GRUB TREELINE TO PROPOSED PROPERTY LINE.

CALLOUT	NORTHING	EASTING	DESCRIPTION
1	3877364.04	11562982.84	NW CORNER OF FENCE
2	3877246.32	11563041.77	SE CORNER OF FENCE
3	3877285.61	11563029.04	SE CORNER OF METER VAULT
4	3877298.48	11563026.94	NW CORNER OF METER VAULT
5	3877305.22	11562993.97	CENTER OF EST
6	3877245.68	11563134.65	TIE INTO EXISTING STREET
7	3877235.18	11563108.39	END OF GRAVEL RADIUS
8	3877225.62	11563100.22	END OF GRAVEL RADIUS
9	3877196.52	11563109.23	TIE INTO EXISTING STREET
10	3877289.03	11563048.99	NE CORNER OF METER VAULT
11	3877281.67	11563038.22	SW CORNER OF METER VAULT
12	3877355.07	11562991.01	FIRE HYDRANT 1
13	3877281.50	11562972.37	FIRE HYDRANT 2
14	3877293.93	11563056.80	FIRE HYDRANT 3
15	3877274.77	11563048.57	FIRE HYDRANT 4
16	3877313.86	11562973.80	TANK OVERFLOW STRUCTURE
17	3877283.65	11562996.59	YARD HYDRANT

Dewberry

Dewberry Engineers Inc.
4805 Lake Brook Drive, Suite 200
Glen Allen, Virginia 23060
PHONE: 804.290.7957
FAX: 804.290.7928
www.dewberry.com

ZION CROSSROADS ELEVATED WATER STORAGE TANK

FLUVANNA COUNTY
DEPARTMENT OF PUBLIC WORKS

FLUVANNA COUNTY, VA

KEY PLAN

SEAL

COMMONWEALTH OF VIRGINIA
DANYLO A. VILLHAUER
Lic. No. 046419
5/4/2018
PROFESSIONAL ENGINEER

SCALE

0' 10' 20'
GRAPHIC SCALE
1" = 10'

No.	DATE	BY	Description

REVISIONS

DRAWN BY	BMM / JEH
APPROVED BY	DAV
CHECKED BY	BMM
DATE	MAY 2018

TITLE

SITE LAYOUT

PROJECT NO. 50078862

C1.0

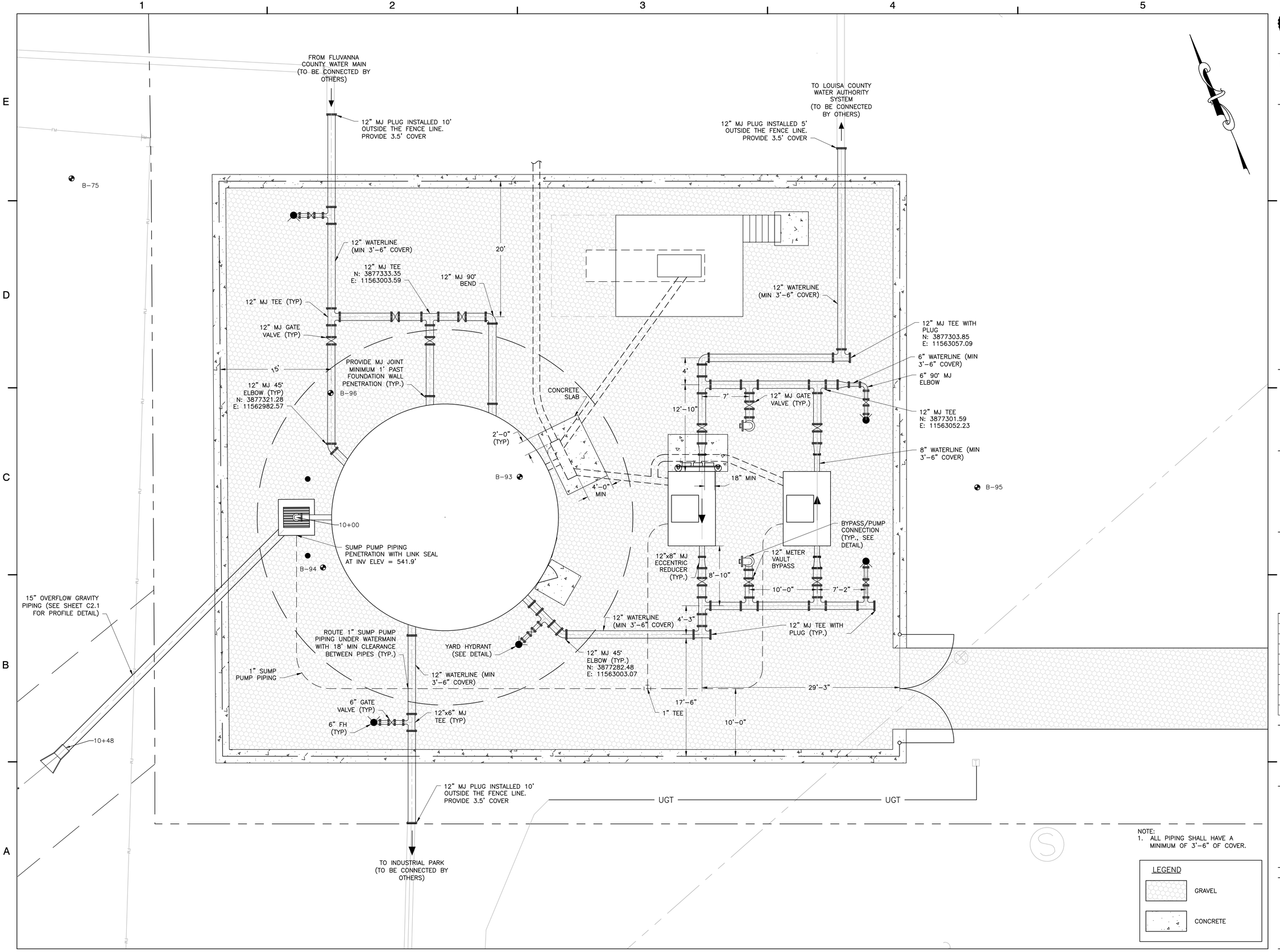

NOTE:
1. ALL PIPING SHALL HAVE A MINIMUM OF 3'-6" OF COVER.

LEGEND
- GRAVEL
- CONCRETE

Dewberry

Dewberry Engineers Inc.
4805 Lake Brook Drive, Suite 200
Glen Allen, Virginia 23060
PHONE: 804.290.7957
FAX: 804.290.7928
www.dewberry.com

ZION CROSSROADS ELEVATED WATER STORAGE TANK

FLUVANNA COUNTY
DEPARTMENT OF PUBLIC WORKS

FLUVANNA COUNTY, VA

KEY PLAN

SEAL

COMMONWEALTH OF VIRGINIA
BANYLO A. VILLIHAUER
Lic. No. 046419
5/4/2018
PROFESSIONAL ENGINEER

SCALE

0' 6' 12'
GRAPHIC SCALE 1" = 6'

No.	DATE	BY	Description

REVISIONS

DRAWN BY	BMM / JEH
APPROVED BY	DAV
CHECKED BY	BMM
DATE	MAY 2018

TITLE

PIPING PLAN

PROJECT NO. 50078862

C1.1

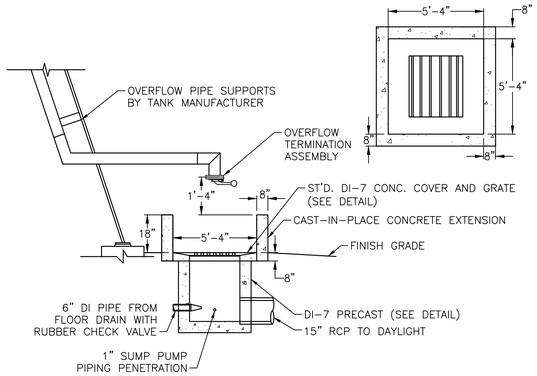

NOTES

1. DI-7 TO BE CONSTRUCTED IN ACCORDANCE TO VDOT ST'D. 104.22
2. REFER TO PIPING PLANS FOR ORIENTATION AND SIZE OF PIPING.
3. PRECAST STRUCTURE TO BE IN ACCORDANCE WITH PRECAST CONCRETE SPECIFICATIONS.
4. CAST-IN-PLACE CONCRETE TO BE 4,000 PSI AND IN ACCORDANCE WITH CAST-IN-PLACE CONCRETE SPECIFICATIONS.
5. SEE PROFILE FOR INVERTS.

TANK OVERFLOW STRUCTURE

N.T.S.

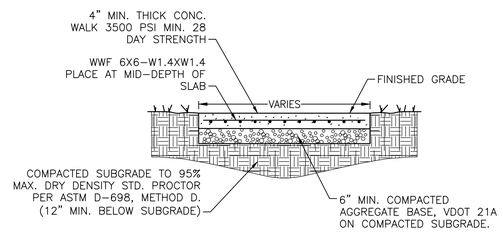

CONCRETE ENTRY

N.T.S.

Source: Dewberry

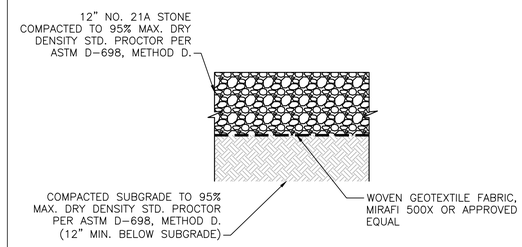

GRAVEL SECTION

N.T.S.

Source: Dewberry

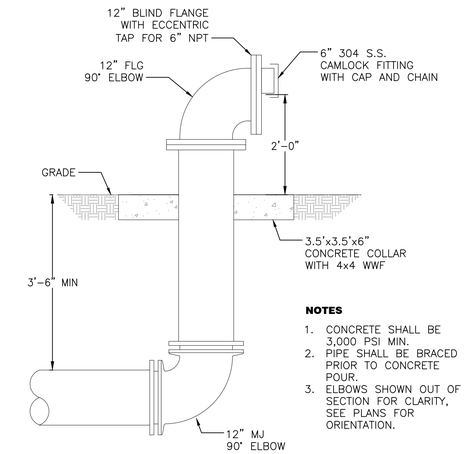

NOTES

1. CONCRETE SHALL BE 3,000 PSI MIN.
2. PIPE SHALL BE BRACED PRIOR TO CONCRETE POUR.
3. ELBOWS SHOWN OUT OF SECTION FOR CLARITY, SEE PLANS FOR ORIENTATION.

BYPASS/PUMP CONNECTION

Source: Dewberry

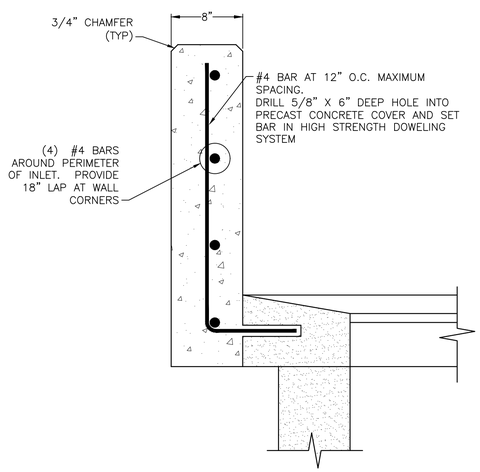

TANK OVERFLOW STRUCTURE WALL EXTENSIONS

N.T.S.

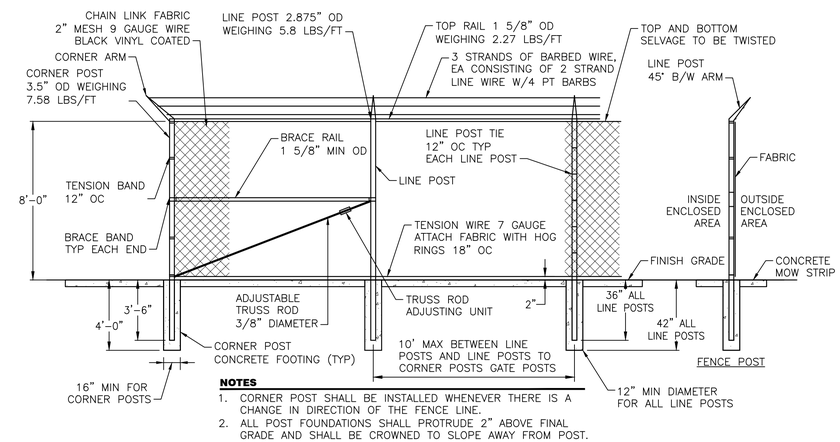

NOTES

1. CORNER POST SHALL BE INSTALLED WHENEVER THERE IS A CHANGE IN DIRECTION OF THE FENCE LINE.
2. ALL POST FOUNDATIONS SHALL PROTRUDE 2" ABOVE FINAL GRADE AND SHALL BE CROWNED TO SLOPE AWAY FROM POST.

STANDARD CHAIN LINK FENCE

N.T.S.

Source: Dewberry

NOTES

1. FOR NON-PAVED SECTIONS BACKFILL WITH SUITABLE SOILS REMOVED FROM TRENCH AND COMPACT TO 95% STD DENSITY.
2. PROVIDE NUMBER OF CONDUITS AS SHOWN ON ELECTRICAL DRAWINGS FOR EACH DUCTBANK.

ELECTRICAL DUCTBANK - SECTION

N.T.S.

Source: Dewberry

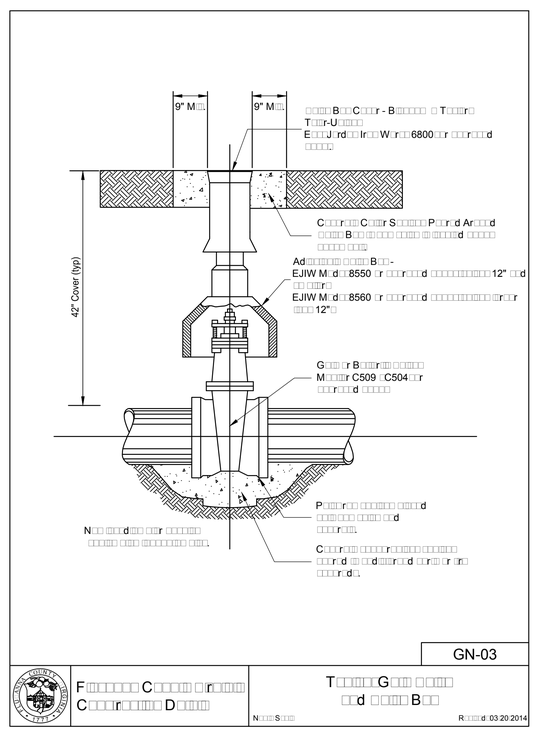

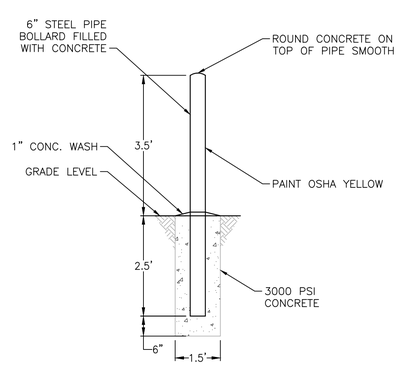

PIPE BOLLARD

N.T.S.

Source: Dewberry

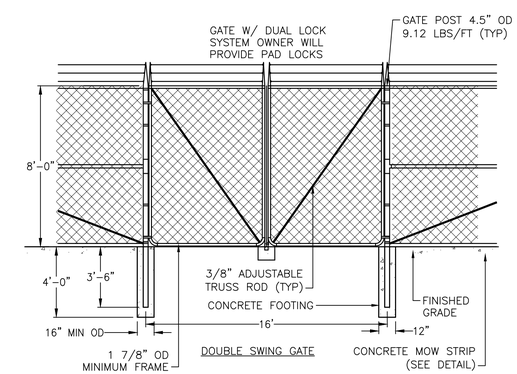

CHAIN LINK FENCE GATE

N.T.S.

Source: Dewberry

Dewberry

Dewberry Engineers Inc.
4805 Lake Brook Drive, Suite 200
Glen Allen, Virginia 23060
PHONE: 804.290.7957
FAX: 804.290.7928
www.dewberry.com

ZION CROSSROADS
ELEVATED WATER STORAGE TANK

FLUVANNA COUNTY
DEPARTMENT OF PUBLIC WORKS

FLUVANNA COUNTY, VA

KEY PLAN

SEAL

COMMONWEALTH OF VIRGINIA
DANYLO A. VILLHAUER
Lic. No. 046419
5/4/2018
PROFESSIONAL ENGINEER

SCALE

No.	DATE	BY	Description

REVISIONS

DRAWN BY	BMM / JEH
APPROVED BY	DAV
CHECKED BY	BMM
DATE	MAY 2018

TITLE

DETAILS

PROJECT NO. 50078862

C2.0

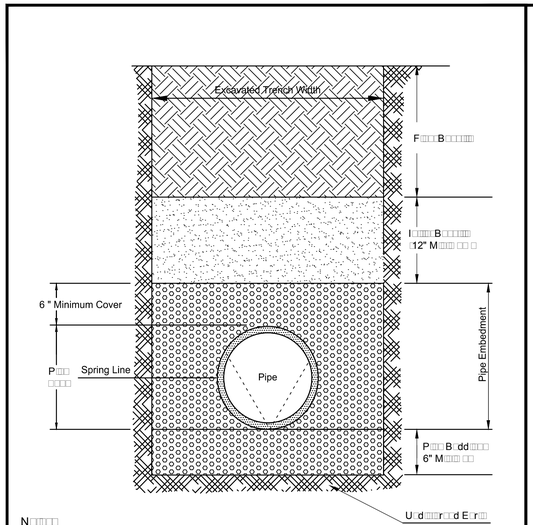

N
1 P dd d d E r 3:4 .
2 I 3 d .
3 F 8 d .
4 T 6" d ANSI/AWWA C605-94.

GN-02

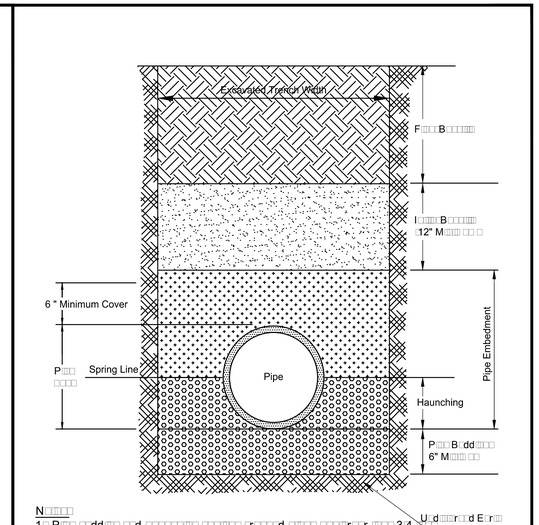

N
1 P dd d d E r 3:4 .
2 P d 3:4 r .
3 I 1 d .
4 F 8 d .
5 T 6" d r ANSI/AWWA C600
6 I DIP dd d ANSI/AWWA C600

GN-01

F C r D
P E d d B r P P
N S R d: 03/20/2014

F C r D
P E d d B r D Ir P
N S R d: 03/20/2014

1992 3.21

LEVEL SPREADER

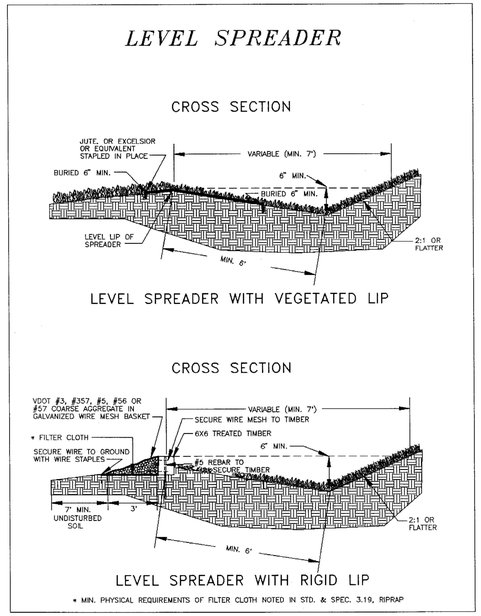

Source: Va. DSWC and N.C. Erosion and Sediment Control Planning and Design Manual

Plate 3.21-2

DRAINAGE PIPING

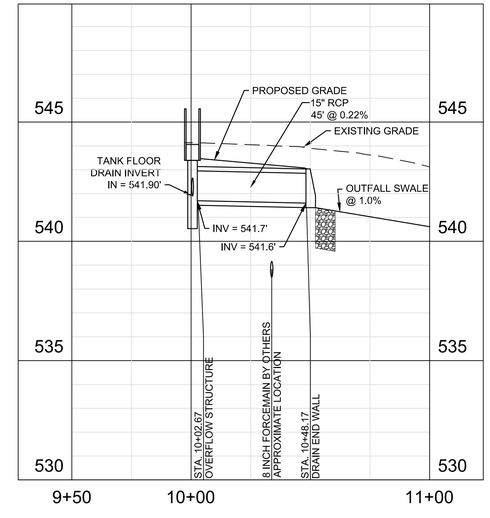

HORIZONTAL 0' 30' 60' 1" = 30'

VERTICAL 0' 3' 6' 1" = 3'

TANK OVERFLOW PIPE - PROFILE

N.T.S.

NOTES

1. CONTRACTOR TO COORDINATE WITH CONTRACTOR OF "ZION CROSSROADS WATER AND SEWER SYSTEM" PROJECT FOR TIMING OF FORCE MAIN INSTALLATION AT THIS LOCATION.

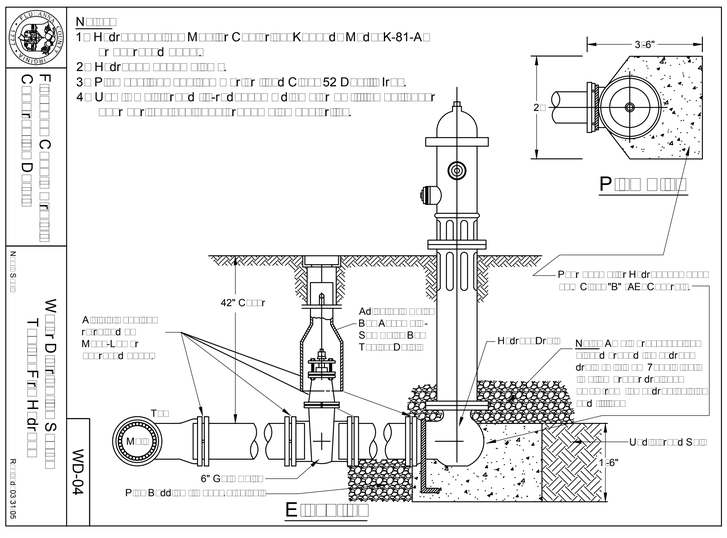

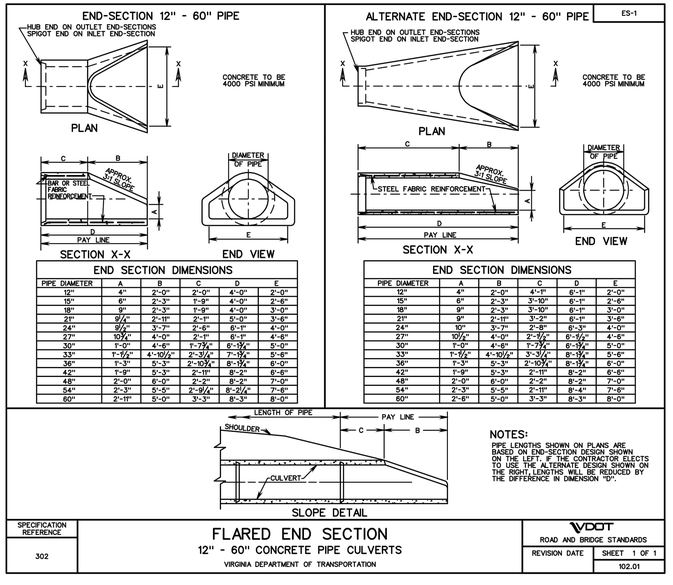

PIPE DIAMETER	A	B	C	D	E
12"	4"	2'-0"	2'-0"	4'-0"	2'-0"
15"	6"	2'-3"	1'-9"	4'-0"	2'-6"
18"	9"	2'-3"	1'-9"	4'-0"	3'-0"
21"	9"	2'-11"	2'-1"	5'-0"	3'-6"
24"	9"	3'-7"	2'-6"	6'-1"	4'-0"
27"	10½"	4'-0"	2'-11"	6'-1"	4'-6"
30"	1'-0"	4'-6"	1'-7½"	6'-1½"	5'-0"
33"	1'-1½"	4'-10½"	2'-3½"	7'-1½"	5'-6"
36"	1'-3"	5'-3"	2'-10½"	8'-1½"	6'-0"
42"	1'-9"	5'-3"	2'-11"	8'-2"	6'-6"
48"	2'-0"	6'-0"	2'-2"	8'-2"	7'-0"
54"	2'-3"	5'-5"	2'-9½"	8'-2½"	7'-6"
60"	2'-11"	5'-0"	3'-3"	8'-3"	8'-0"

PIPE DIAMETER	A	B	C	D	E
12"	4"	2'-0"	4'-9"	6'-1"	2'-0"
15"	6"	2'-3"	3'-10"	6'-1"	2'-6"
18"	9"	2'-3"	3'-10"	6'-1"	3'-0"
21"	9"	2'-11"	3'-2"	6'-1"	3'-6"
24"	10"	3'-7"	2'-8"	6'-3"	4'-0"
27"	10½"	4'-0"	2'-7½"	6'-5½"	4'-6"
30"	1'-0"	4'-6"	1'-7½"	6'-10½"	5'-0"
33"	1'-1½"	4'-10½"	3'-3½"	8'-1½"	5'-6"
36"	1'-3"	5'-3"	2'-10½"	8'-1½"	6'-0"
42"	1'-9"	5'-3"	2'-11"	8'-2"	6'-6"
48"	2'-0"	6'-0"	2'-2"	8'-2"	7'-0"
54"	2'-3"	5'-5"	2'-11"	8'-4"	7'-6"
60"	2'-6"	5'-0"	3'-3"	8'-3"	8'-0"

Dewberry

Dewberry Engineers Inc.
4805 Lake Brook Drive, Suite 200
Glen Allen, Virginia 23060
PHONE: 804.290.7957
FAX: 804.290.7928
www.dewberry.com

ZION CROSSROADS
ELEVATED WATER STORAGE TANK

FLUVANNA COUNTY
DEPARTMENT OF PUBLIC WORKS

FLUVANNA COUNTY, VA

KEY PLAN

SEAL

SCALE

No.	DATE	BY	Description

REVISIONS

DRAWN BY	BMM / JEH
APPROVED BY	DAV
CHECKED BY	BMM
DATE	MAY 2018

TITLE

DETAILS

PROJECT NO. 50078862

C2.1

Dewberry

Dewberry Engineers Inc.
4805 Lake Brook Drive, Suite 200
Glen Allen, Virginia 23060
PHONE: 804.290.7957
FAX: 804.290.7928
www.dewberry.com

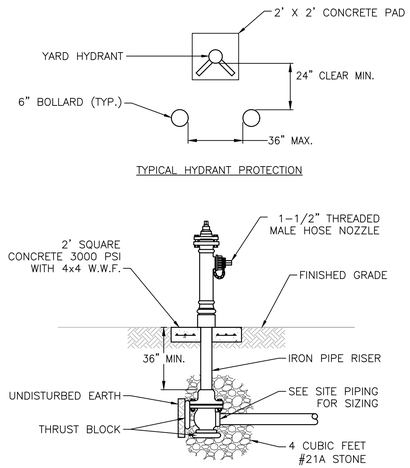

YARD HYDRANT

N.T.S. Source: Dewberry

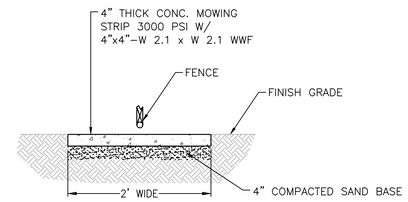

NOTES:
1. PROVIDE CONTROL JOINTS AND EXPANSION JOINTS EVERY 4'
2. 2' WIDE STRIP TO BE USED WHERE SHOWN ON THE PLANS.

CONCRETE MOW STRIP

N.T.S. Source: Dewberry

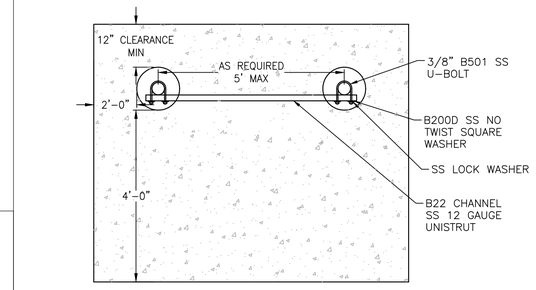

PLAN VIEW

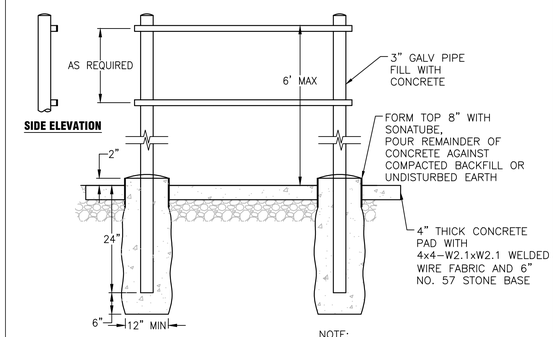

SIDE ELEVATION

FRONT ELEVATION

NOTE:
IF ELECTRICAL RACK IS REQUIRED TO BE LONGER THAN 5' PROVIDE ADDITIONAL VERTICAL SUPPORTS AS REQUIRED.

EXTERIOR ELECTRICAL RACK

N.T.S. Source: Dewberry

DI-7, 7A, 7B

DETAILS OF CONCRETE COVER AND GRATE

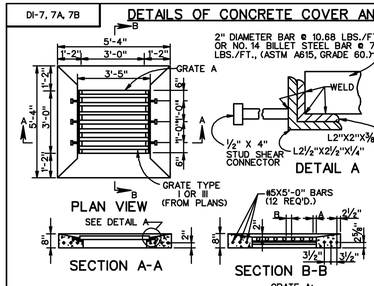

GRATE A:

BAR SPACING CHART		
GRATE TYPE	MAXIMUM DIMENSION	
	A	B
I	1 1/2"	3"
III	1"	1"

APPROXIMATE QUANTITIES	
CONCRETE CLASS A3	REINFORCING STEEL
0.423 C. Y.	63 LBS.

NOTES

1. GRATE A IS TO BE UTILIZED IN LOCATIONS NOT NORMALLY SUBJECT TO TRAFFIC.
2. GRATE B IS TO BE UTILIZED IN LOCATIONS NORMALLY SUBJECT TO TRAFFIC.
3. FOR DETAILS OF LOAD CARRYING GRATE (GRATE B), SEE T-DI-7, SHEET 103.08.
4. CONCRETE COVER AND GRATE ARE TO BE FURNISHED AS A SINGLE UNIT. OUTSIDE DIMENSIONS OF GRATE TO BE 3'-4" X 2'-11 1/2" (GRATE A) OR 3'-4" X 2'-11 1/2" (GRATE B).
5. ALTERNATE METHODS OF ANCHORING ANGLE IRON WILL BE ACCEPTABLE IF APPROVED BY THE ENGINEER.
6. GRATE AND COLLAR ARE TO BE GALVANIZED.
7. CONCRETE COVER MAY BE PRECAST OR CAST IN PLACE.
8. CONCRETE TO BE CLASS A3 IF CAST IN PLACE. 4000 PSI IF PRECAST.
9. GRATE BARS TO BE PARALLEL TO DITCH FLOW.

DETAILS OF GUTTER AND METHOD OF PLACEMENT

NOTES

1. DI-7 NO GUTTERS.
   DI-7A NO GUTTER IN ONE DIRECTION.
   DI-7B GUTTER IN BOTH DIRECTIONS.
2. JOINTS BETWEEN GUTTERS AND CONCRETE COVER ARE TO BE DOWELED WITH #4 X 8" SMOOTH RODS @ APPROX. 12" C-C TO PREVENT SETTLEMENT. IN LIEU OF DOWELS A 2" X 4" NOTCH MAY BE PROVIDED.
   SEE STANDARD T-DI-3, 4 ALTERNATE DESIGN.
3. VARIABLE 2:1 OR FLATTER.
4. DITCH GRADE MUST BE ADJUSTED TO MEET DIFFERENCE IN ELEVATION. SEE LONGITUDINAL SECTION.
5. IF DEPTH (D) BECOMES LESS THEN 4", LENGTH OF WINGS ARE TO BE EXTENDED AS DIRECTED BY THE ENGINEER.
6. CURTAIN WALL TO BE LOCATED AT THE END OF THE PAVED DITCH SECTIONS OF THE DI-7A & DI-7B THAT ARE NOT ABUTTED BY OTHER DRAINAGE.
7. IF NORMAL DITCH GRADE IS TOO FLAT TO ALLOW FOR ADJUSTED GRADE TO INLET, A SPECIAL GUTTER DETAIL WILL BE REQUIRED ON PLANS.

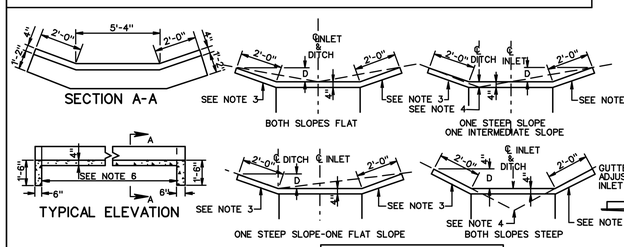

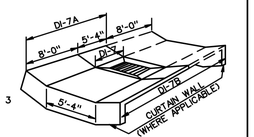

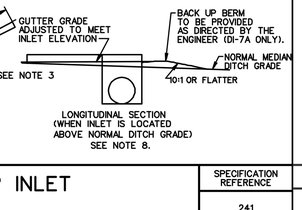

LONGITUDINAL SECTION (WHEN INLET IS LOCATED ABOVE NORMAL DITCH GRADE) SEE NOTE 8.

APPROXIMATE QUANTITY FOR ONE CURTAIN WALL, MEASURED FROM BOTTOM OF GUTTER	
CONCRETE CLASS A3	0.241 CU. YDS.

APPROXIMATE QUANTITIES			
CONCRETE CLASS A3	DI-7	DI-7A	DI-7B
(CU. YDS.)	NONE	1.211	2.148

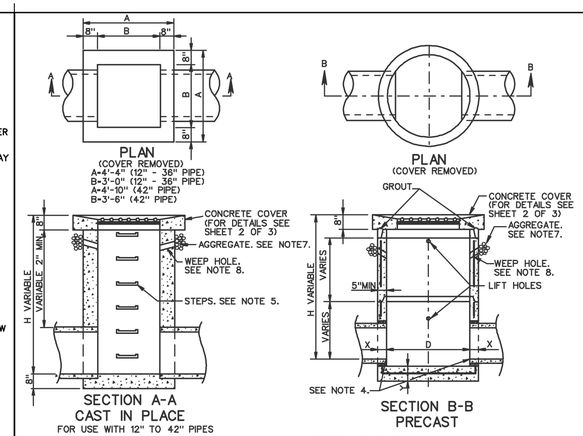

RECOMMENDED MINIMUM HEIGHT CHART		
PIPE SIZE	H DIMENSION	
	CONC.	CORR. METAL
12"	2'-6"	2'-5"
15"	2'-9 1/4"	2'-8"
18"	3'-0 1/2"	2'-11"
21"	3'-3 3/4"	3'-2"
24"	3'-7"	3'-5"
27"	3'-10 1/4"	3'-8"
30"	4'-1 1/2"	3'-11"
33"	4'-4 3/4"	4'-2"
36"	4'-8"	4'-5"
42"	5'-2 1/2"	4'-11"

NOTES (CONT.)

15. DI-7--------NO GUTTER
    DI-7A-------SINGLE GUTTER WHEN DROP INLET IS ON A GRADE.
    DI-7B------ DOUBLE GUTTER WHEN DROP INLET IS IN A SAG BETWEEN TWO GRADES.
16. FOR DETAILS OF PRECAST DI-7 NOT SHOWN HEREON SEE PRECAST UNIT ASSEMBLY DIAGRAM, PAGE 103.01, FOR PRECAST GENERAL NOTES, PAGE 103.02 AND FOR APPLICABLE PRECAST BASE, RISER AND TOP DETAILS, PAGES 103.07 THRU 103.12.
17. GRATE BARS TO BE PARALLEL TO DITCH FLOW.

PIPE SIZE	12"	15"	18"	24"	30"	36"	42"
MINIMUM DEPTH H	2'-0"	2'-3 1/4"	2'-6 1/2"	3'-1"	3'-7 1/2"	4'-2"	4'-8 1/2"
CONCRETE CUBIC YARDS	.947	1.045	1.143	1.339	1.535	1.731	1.927

INCREMENT PER FOOT OF ADDITIONAL DEPTH (H) { = 0.362 CU. YDS. (12" - 36" PIPE); = 0.410 CU. YDS. (42" PIPE) }

NOTES

DI-7, 7A, 7B

1. DEPTH OF INLET (H) TO BE SHOWN ON PLANS.
2. THE "H" DIMENSION SHOWN ON THE STANDARDS AND SPECIFIED ON THE PLANS WILL BE MEASURED FROM THE INVERT OF THE OUTFALL PIPE TO THE TOP OF THE STRUCTURE. PLAN "H" DIMENSIONS ARE APPROXIMATE ONLY FOR ESTIMATING PURPOSES AND THE ACTUAL DIMENSIONS SHALL BE DETERMINED BY THE CONTRACTOR FROM FIELD CONDITIONS. MAXIMUM DEPTH (H) TO BE 12'-8.
3. WHEN SPECIFIED ON THE PLANS THE INVERT IS TO BE SHAPED IN ACCORDANCE WITH STANDARD IS-1. THE COST OF FURNISHING AND PLACING ALL MATERIALS INCIDENTAL TO THE SHAPING IS TO BE INCLUDED IN THE BID PRICEN FOR THE STRUCTURE.
4. IN THE EVENT THE INVERT OF THE OUTFALL PIPE IS HIGHER THAN THE BOTTOM OF THE STRUCTURE, THE INVERT OF THE STRUCTURE SHALL BE SHAPED WITH CEMENT MORTAR TO PREVENT STANDING OR PONDING OF WATER IN THE STRUCTURE. THE COST OF FURNISHING AND PLACING ALL MATERIALS INCIDENTAL TO THE SHAPING IS TO BE INCLUDED IN THE BID PRICE FOR THE STRUCTURE.
5. STEPS ARE TO BE PROVIDED WHEN H IS 4'-0" OR GREATER. FOR DETAILS SEE STANDARD ST-1.
6. REINFORCED CONCRETE FOOTING MAY BE PRECAST OR CAST-IN-PLACE. TWO LIFTING HOOKS OF FABRICATORS DESIGN TO BE PROVIDED IN PRECAST FOOTING
7. 4" DEPTH AGGREGATE #68,#78, OR #8 X 6" WIDTH.
8. 3" DIAMETER WEEP HOLE WITH 12"X12" PLASTIC HARDWARE CLOTH 1/4" MESH OR GALVANIZED STEEL WIRE, MINIMUM WIRE DIAMETER 0.03", NUMBER 4 MESH HARDWARE CLOTH ANCHORED FIRMLY TO THE OUTSIDE OF THE STRUCTURE.
9. THE TYPE OF INLET (PRECAST OR CAST IN PLACE), DETAILED HEREON, TO BE CONSTRUCTED, WILL BE AT THE OPTION OF THE CONTRACTOR.
10. FOR DETAILS OF CONCRETE COVER, COLLAR AND GRATE AND THE METHOD OF PLACING APPROACH GUTTER SEE SHEET 2 OF 3.
11. CAST-IN PLACE CONCRETE IS TO BE CLASS A3 (3000 PSI). PRECAST CONCRETE IS TO BE 4000 PSI.
12. CONCRETE QUANTITIES SHOWN ARE FOR INDICATED DEPTH (H) WITHOUT PIPES. THE AMOUNT DISPLACED BY PIPES MUST BE DEDUCTED TO OBTAIN TRUE QUANTITIES. FOR INLETS OF DIFFERENT DEPTHS ADD OR SUBTRACT THE APPROPRIATE CUBIC YARDS OF CONCRETE FOR EACH FOOT OF DEPTH.
13. PAVED DITCHES ARE TO BE TRANSITIONED TO MEET INLET GUTTER AS SHOWN IN STANDARD PG-2A.
14. PROVIDE SAFETY SLABS WHEN SPECIFIED ON THE PLANS.

VDOT ROAD AND BRIDGE STANDARDS

SHEET 2 OF 3	REVISION DATE
104.23	

STANDARD MEDIAN DROP INLET
12" TO 42" PIPE
VIRGINIA DEPARTMENT OF TRANSPORTATION

SPECIFICATION REFERENCE
241 503

SPECIFICATION REFERENCE
241 503

STANDARD MEDIAN DROP INLET
12" TO 42" PIPE
VIRGINIA DEPARTMENT OF TRANSPORTATION

VDOT ROAD AND BRIDGE STANDARDS

REVISION DATE	SHEET 1 OF 3
	104.22

ZION CROSSROADS
ELEVATED WATER STORAGE TANK

FLUVANNA COUNTY
DEPARTMENT OF PUBLIC WORKS

FLUVANNA COUNTY, VA

KEY PLAN

SEAL

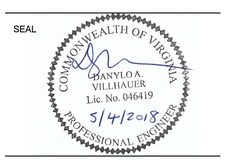

SCALE

No.	DATE	BY	Description

REVISIONS

DRAWN BY	BMM / JEH
APPROVED BY	DAV
CHECKED BY	BMM
DATE	MAY 2018

TITLE

DETAILS

PROJECT NO. 50078862

C2.2

Dewberry

Dewberry Engineers Inc.
4805 Lake Brook Drive, Suite 200
Glen Allen, Virginia 23060
PHONE: 804.290.7957
FAX: 804.290.7928
www.dewberry.com

NOTES:

1. AREA INSIDE TANK FENCE IS CO□ERED WITH STONE □SEE DETAIL SHEET C2.0□ PROPOSED SPOT SHOTS AND CONTOURS IN THIS AREA REFLECT THE TOP OF STONE ELE□ATIONS□NOT TOP OF DIRT ELE□ATIONS.
2. SPOT SHOT LEGEND□
   TG □TOP OF GRA□EL TC □TOP OF CONCRETE FF □FINISH FLOOR FG□ FINISHED GRADE

SOILS LEGEND

Ng — NASON SILT LOAM□UNDULATING PHASE□HSG B

SOIL BOUNDARY □NOT SHOWN□

E&S LEGEND

CE — CONSTRUCTION ENTRANCE □A E□S STD. 3.02□

SF — SILT FENCE □A E□S STD. 3.05□

LIMITS OF DISTURBANCE

MU — MULCH □A E□S STD. 3.35□

TS — TEMPORARY SEEDING □A E□S STD. 3.31□

PS — PERMANENT SEEDING □A E□S STD. 3.32□

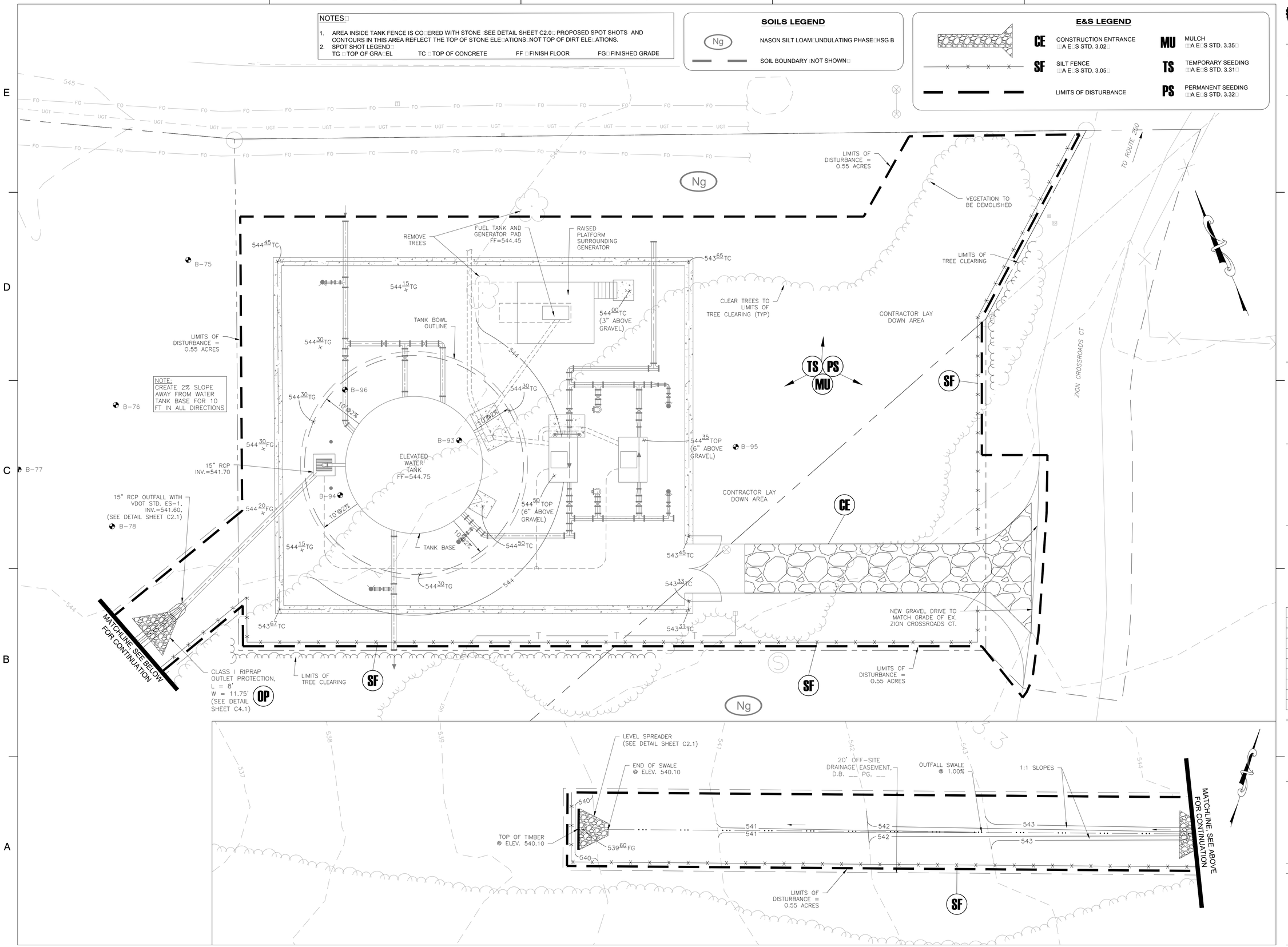

ZION CROSSROADS
ELEVATED WATER STORAGE TANK

FLUVANNA COUNTY
DEPARTMENT OF PUBLIC WORKS

FLUVANNA COUNTY, VA

KEY PLAN

SEAL

COMMONWEALTH OF VIRGINIA
DANYLO A. VILLIHAUER
Lic. No. 046419
5/4/2018
PROFESSIONAL ENGINEER

SCALE

0' 10' 20'
GRAPHIC SCALE
1" = 10'

No.	DATE	BY	Description

REVISIONS

DRAWN BY	BMM / JEH
APPROVED BY	DAV
CHECKED BY	BMM
DATE	MAY 2018

TITLE

GRADING AND EROSION & SEDIMENT CONTROL PLAN

PROJECT NO. 50078862

C3.0

EROSION & SEDIMENT CONTROL NARRATIVE

PROJECT DESCRIPTION

THIS PROJECT CONSISTS OF THE INSTALLATION OF AN ELEVATED WATER TANK, LOCATED ON RICHMOND ROAD (RTE 250), 0.15 MILES TO THE WEST OF THE INTERSECTION OF RICHMOND ROAD WITH JAMES MADISON HIGHWAY. THE LIMITS OF DISTURBANCE ARE 0.58 ACRES. ACCESS TO THE SITE WILL BE VIA A PROPOSED GRAVEL ACCESS ENTRANCE OFF OF ZION CROSSROADS COURT.

EXISTING SITE CONDITIONS

STORM WATER IS GENERALLY CONVEYED OFF-SITE THROUGH OVERLAND FLOW. NO WETLANDS WILL BE AFFECTED BY THE CONSTRUCTION OF THE PROJECT. THE PROJECT AREA IS NOT LOCATED WITHIN A FLOODPLAIN AS SHOWN ON FEMA FIRM PANEL #51065C0100C, ZONE X DATED 05/16/2008. THE SITE IS A MIX OF GRASS AND WOODS, IS RELATIVELY FLAT, AND SLOPES AT ABOUT 1%-2% TO THE SOUTH/SOUTHWEST.

ADJACENT AREAS

ALL LAND IMMEDIATELY SURROUNDING THE SITE IS VACANT AND A MIX OF GRASS/WOODS. TO THE NORTH IS RICHMOND ROAD/ROUTE 250. TO THE EAST ACROSS ZION CROSSROADS COURT IS "CROSSROADS MARKET AND DELI" BUSINESS. TO THE SOUTH AND WEST IS OPEN/VACANT GRASSY FIELDS. LOUISA COUNTY IS LOCATED ON THE NORTH SIDE OF RICHMOND ROAD.

OFF-SITE AREAS

NO OFF-SITE AREAS ARE ANTICIPATED WITH THIS PROJECT.

SOILS

ACCORDING TO ONLINE WEB BASED SOIL SURVEY BY THE NATURAL RESOURCES CONSERVATION SERVICE, UNITED STATES DEPARTMENT OF AGRICULTURE: THE FOLLOWING SOILS MAY BE FOUND WITHIN THE PROJECT LIMITS:

Ng IS NASON SILT LOAM, UNDULATING PHASE. THE EROSION HAZARD K FACTOR IS 0.43 AND IS HYDROLOGIC SOIL GROUP (HSG) B. THIS SOIL MAKES UP THE ENTIRE PROJECT SITE.

THIS SOIL IS TYPICALLY FOUND ON HILLS SLOPING 2 TO 8 PERCENT.

CRITICAL EROSION AREAS

CRITICAL EROSION AREAS ARE NOT ANTICIPATED WITH THIS PROJECT.

SOIL STOCKPILE AND BORROW AREAS

ALL SOIL STOCKPILES SHALL HAVE SILT FENCE ON ALL SIDES. STOCKPILES SHALL BE TEMPORARY/PERMANENTLY SEEDED DEPENDING ON TIME FRAME FOR REUSE OR REMOVAL OF SOIL MATERIAL. ALL ON-SITE BORROW AREAS (IF NECESSARY) SHALL BE DELINEATED ON PLAN BY CONTRACTOR. APPROPRIATE EROSION AND SEDIMENT CONTROL FEATURES (EX. SILT FENCE, SEDIMENT TRAPS/BASINS) SHALL BE INSTALLED DEPENDING ON LOCATIONS AND FIELD CONDITIONS.

STORMWATER NARRATIVE

FLUVANNA COUNTY IS NOT IN A CHESAPEAKE BAY PRESERVATION AREA, AND THE PROJECT CONSISTS OF LAND DISTURBANCE BETWEEN 10,000 SF AND 1 ACRE. THEREFORE, A STORMWATER MANAGEMENT PLAN IS NOT REQUIRED. HOWEVER, AN EROSION & SEDIMENT CONTROL PLAN IS REQUIRED AND HAS BEEN PREPARED.

MS-19 IS NOT APPLICABLE BECAUSE STORMWATER LEAVES THE SITE AS SHEET FLOW AT NON-EROSIVE VELOCITIES. THE DISCHARGE FROM THE 15" TANK DRAIN PIPE IS NOT STORMWATER FLOW; THEREFORE, MS-19 DOES NOT APPLY IN THAT SCENARIO. OUTLET PROTECTION/RIPRAP HAS BEEN PLACED AT THE OUTFALL OF THE 15" PIPE TO PREVENT EROSION FOR WHENEVER THE DRAIN LINE IS UTILIZED.

EROSION AND SEDIMENT CONTROL MEASURES

THE PLAN HAS BEEN DEVELOPED TO MINIMIZE LAND DISTURBANCE. WHERE GRADING IS NECESSARY, ADEQUATE PRECAUTIONS SHALL BE TAKEN TO MINIMIZE EROSION AND TO CONTAIN SILT THROUGH PROPER EROSION AND SEDIMENT CONTROL PRACTICES. THE INTENT OF THIS EROSION AND SEDIMENT CONTROL PLAN IS TO GUIDE THE CONTRACTOR IN IMPLEMENTING ACCEPTABLE MEASURES, INFRASTRUCTURE, AND MAINTENANCE PROGRAMS THAT WILL MINIMIZE THE AMOUNT OF EROSION AND RESULTING SEDIMENT THAT WILL TAKE PLACE DURING THE CONSTRUCTION OF THIS PROJECT. ALL VEGETATIVE AND STRUCTURAL EROSION AND SEDIMENT CONTROL PRACTICES WILL BE CONSTRUCTED AND MAINTAINED ACCORDING TO THE MINIMUM STANDARDS AND SPECIFICATIONS OF THE VA EROSION & SEDIMENT CONTROL BOOK.

EROSION AND SEDIMENT CONTROL MEASURES

TEMPORARY CONSTRUCTION ENTRANCE (STD. & SPEC. 3.02):

TO REDUCE THE AMOUNT OF SOIL OR MUD BEING TRANSPORTED ONTO PUBLIC ROADS. INSTALL A STONE PAD LOCATED AT POINTS OF INGRESS AND EGRESS, USING VDOT #1 STONE. DIMENSIONS OF CONSTRUCTION ENTRANCE SHALL BE A MINIMUM OF 12 FEET WIDE BY 70 FEET LENGTH. A FILTER FABRIC LINER SHALL BE INSTALLED PRIOR TO THE PLACEMENT OF THE CONSTRUCTION ENTRANCE AGGREGATE AS SPECIFIED IN STATE MINIMUM STANDARD #17.

SILT FENCE (STD. & SPEC. 3.05):

A TEMPORARY SEDIMENT BARRIER TO CONTROL EROSION IN SHEET FLOW AND LOW FLOW CHANNEL SITUATIONS. SILT FENCE CONSISTS OF A SYNTHETIC FILTER FABRIC (USUALLY BLACK) ENTRENCHED 4" INTO THE GROUND, STRETCHED TIGHT AND ATTACHED TO SUPPORT POSTS SPACED 6 FEET APART.

TEMPORARY SEEDING (VESCH STD. & SPEC. 3.31):

THE ESTABLISHMENT OF A TEMPORARY VEGETATIVE COVER ON DISTURBED AREAS BY SEEDING WITH APPROPRIATE RAPIDLY GROWING ANNUAL PLANTS. TEMPORARY SEEDING REDUCES EROSION AND SEDIMENTATION BY STABILIZING DISTURBED AREAS THAT WILL NOT BE BROUGHT TO FINAL GRADE FOR A PERIOD OF MORE THAN 14 DAYS. TEMPORARY SEEDING REDUCES DAMAGE FROM SEDIMENT AND RUNOFF TO DOWNSTREAM OR OFF-SITE AREAS, AND TO PROVIDE PROTECTION TO BARE SOILS EXPOSED DURING CONSTRUCTION UNTIL PERMANENT VEGETATION OR OTHER EROSION CONTROL MEASURES CAN BE ESTABLISHED. FOR USE WHERE EXPOSED SOIL SURFACES WILL NOT BE AT FINAL GRADE FOR MORE THAN 14 DAYS. SUCH AREAS INCLUDED DENUDED AREAS, SOIL STOCKPILES, DIKES, DAMS, SIDES OF SEDIMENT BASINS, TEMPORARY ROADBANKS, ETC. (SEE MS#1 AND MS#2). A PERMANENT VEGETATIVE COVER SHALL BE APPLIED TO AREAS THAT WILL BE LEFT DORMANT FOR A PERIOD OF MORE THAN ONE (1) YEAR.

PERMANENT SEEDING (VESCH STD. & SPEC. 3.32):

THE ESTABLISHMENT OF A PERENNIAL VEGETATIVE COVER ON DISTURBED AREAS BY PLANTING SEED. PERMANENT SEEDING REDUCES EROSION AND DECREASES SEDIMENT YIELD FROM DISTURBED AREAS. PERMANENT SEEDING STABILIZES DISTURBED AREAS IN A MANNER THAT IS ECONOMICAL, ADAPTABLE TO SITE CONDITIONS, AND ALLOWS SELECTION OF THE MOST APPROPRIATE PLANT MATERIAL. PERMANENT SEEDING ALSO IMPROVES WILDLIFE HABITAT AND ENHANCES NATURAL BEAUTY. FOR USE IN DISTURBED AREAS WHERE PERMANENT, LONG-LIVED VEGETATIVE COVER IS NEEDED TO STABILIZE THE SOIL. FOR USE WHERE ROUGH-GRADED AREAS WHICH WILL NOT BE BROUGHT TO FINAL GRADE FOR A YEAR OR MORE.

MULCHING (VESCH STD. & SPEC. 3.35):

APPLICATION OF PLANT RESIDUES OR OTHER SUITABLE MATERIALS TO THE SOIL SURFACE. MULCHING PERVENTS EROSION BY PROTECTING THE SOIL SURFACE FROM RAINDROP IMPACT AND REDUCING THE VELOCITY OF OVERLAND FLOW. MULCHING FOSTERS THE GROWTH OF VEGETATION BY INCREASING AVAILABLE MOISTURE AND PROVIDING INSULATION AGAINST EXTREME HEAT AND COLD. FOR USE IN AREAS WHICH HAVE BEEN PERMANENTLY SEEDED. MULCHING SHOULD OCCUR IMMEDIATELY FOLLOWING SEEDING. AREAS THAT CANNOT BE SEEDED BECAUSE OF THE SEASON SHOULD BE MULCHED WITH AN ORGANIC MULCH.

OUTLET PROTECTION (VESCH STD. AND SPEC. 3.18)

STRUCTURALLY LINED APRONS OR OTHER ACCEPTABLE ENERGY DISSIPAITNG DEVICES PLACED AT THE OUTLET OF PIPES OR PAVED CHANNEL SECTIONS, IN ORDER TO PREVENT SCOUR AT STORMWATER OUTLETS, TO PROTECT THE OUTLET STRUCTURE, AND TO MINIMIZE THE POTENTIAL FOR DOWNSTREAM EROSION BY REDUCING THE VELOCITY AND ENERGY OF CONCENTRATED STORMWATER FLOWS.

TEMPORARY AND PERMANENT STABILIZATION

DURING CONSTRUCTION APPLY TEMPORARY AND/OR PERMANENT SEEDING AS GRADING OPERATIONS ARE COMPLETED IN AREAS NOT TO RECEIVE PAVEMENT, OR OTHER IMPERVIOUS SURFACES. POST CONSTRUCTION-APPLY TOPSOIL, PERMANENT SEEDING PER SPECIFICATIONS AND SOIL AMENDMENTS (AS NECESSARY) TO ALL DISTURBED SURFACES NOT RECEIVING PAVEMENT OR OTHER IMPERVIOUS SURFACE. TEMPORARY SEEDING SHALL BE APPLIED WITHIN SEVEN DAYS TO DENUDED AREAS THAT MAY NOT BE AT FINAL GRADE, BUT WILL REMAIN DORMANT FOR LONGER THAN 30 DAYS AND LESS THAN ONE YEAR. THIS INCLUDES, BUT IS NOT LIMITED TO, STOCKPILES AND BORROW AREAS. PERMANENT SEEDING SHALL BE APPLIED AND A PERENNIAL VEGETATIVE COVERING SHALL BE ESTABLISHED ON DISTURBED AREAS WITHIN SEVEN DAYS OF BEING BROUGHT TO FINAL GRADE ON AREAS NOT OTHERWISE PROTECTED. SELECTION OF THE SEED MIXTURE SHALL DEPEND ON THE TIME OF YEAR IT IS TO BE APPLIED. MULCHING SHALL BE APPLIED TO ALL PERMANENT SEEDING IMMEDIATELY UPON COMPLETION OF SEED APPLICATION. MULCH LIBERALLY DURING THE MID-SUMMER AND WINTER SEASONS.

SEE VIRGINIA EROSION AND SEDIMENT CONTROL TECHNICAL BULLETIN NO. 4, NUTRIENT MANAGEMENT FOR DEVELOPMENT SITES, FOR UPDATED SEED MIXTURES AND SCHEDULES AS WELL AS UPDATED LIMING, MULCHING, AND FERTILIZING REQUIREMENTS. SEE VIRGINIA EROSION AND SEDIMENT CONTROL HANDBOOK STD. AND SPEC. 3.35 FOR MULCHING SPECIFICATIONS.

EROSION & SEDIMENT CONTROL MAINTENANCE

IN GENERAL, THE PROJECT AREA SHALL BE CHECKED AFTER RAINFALL EVENT OR WEEKLY, WHICH EVER IS MORE FREQUENT TO ENSURE THAT ALL EROSION AND SEDIMENT CONTROL DEVICES ARE IN WORKING ORDER. EROSION CONTROL DEVICES SHALL BE MAINTAINED ACCORDING TO THE FOLLOWING SCHEDULE:

1. CONSTRUCTION ENTRANCE
   MAINTAIN ENTRANCE IN A CONDITION TO PREVENT TRACKING OR FLOW OF MUD ONTO PUBLIC RIGHTS-OF-WAY. ALL MATERIALS SPILLED, DROPPED, WASHED, OR TRACKED FROM VEHICLES ONTO ROADWAYS MUST BE IMMEDIATELY REMOVED.
2. SILT FENCE
   SEDIMENT DEPOSITS SHALL BE REMOVED WHEN DEPOSITS REACH APPROXIMATELY ONE-HALF THE HEIGHT OF THE BARRIER. FABRIC SHALL BE REPLACED IF IT HAS DECOMPOSED OR BECOME INEFFECTIVE.
3. MULCH
   INSPECT PERIODICALLY (PARTICULARLY AFTER RAINSTORMS) TO CHECK FOR EROSION. WHERE EROSION IS OBSERVED IN MULCHED AREAS, ADDITIONAL MULCH SHALL BE APPLIED.
4. SEEDING
   WHEN IT IS CLEAR THAT PLANTS HAVE NOT GERMINATED ON AN AREA OR HAVE DIED, THESE AREAS MUST BE RE-SEEDED IMMEDIATELY TO PREVENT EROSION DAMAGE. IT IS IMPORTANT TO DETERMINE THE REASON GERMINATION DID NOT TAKE PLACE AND MAKE ANY CORRECTIVE ACTIONS NECESSARY PRIOR TO RE-SEEDING THE AREA.
5. OUTLET PROTECTION
   OUTLET PROTECTION TO REMAIN PERMANENTLY AFTER CONSTRUCTION. INSPECT PERIODICALLY, TO ENSURE THAT RIP RAP HAS NOT WASHED AWAY AND IS CLEAR OF DEBRIS.

THE CONTRACTOR SHALL BE RESPONSIBLE FOR PROVIDING AN EMPLOYEE WHO WILL BE RESPONSIBLE IN CHARGE OF THE EROSION AND SEDIMENT CONTROL PLAN AND REQUIREMENTS FOR THE PROJECT THAT IS CERTIFIED BY THE VIRGINIA DEPARTMENT OF CONSERVATION AND RECREATION AS A RESPONSIBLE LAND DISTURBER (RLD). THE NAME OF THE CONTRACTOR'S RLD AND COPY OF HIS CURRENT CERTIFICATION SHALL BE PROVIDED TO THE OWNER, ENGINEER AND COUNTY INSPECTOR PRIOR TO PERFORMING ANY LAND DISTURBING ACTIVITY.
NO EROSION AND SEDIMENT CONTROL MEASURES SHALL BE REMOVED WITHOUT APPROVAL OF THE ENGINEER OR COUNTY INSPECTOR FOR THE PROJECT.
DISPOSAL OF SEDIMENTS SHALL BE IN AN APPROVED LOCATION.

EROSION & SEDIMENT CONTROL SEQUENCE

GENERAL NOTES:

1. ALL EROSION CONTROL MEASURES SHALL BE INSTALLED AND MAINTAINED IN ACCORDANCE WITH THE LATEST EDITION OF THE VIRGINIA EROSION AND SEDIMENT CONTROL HANDBOOK (VESCH).
2. CONTRACTOR MAY COMPLETE CONSTRUCTION-RELATED ACTIVITIES CONCURRENTLY ONLY IF ALL PRECEDING ESC MEASURES HAVE BEEN COMPLETELY INSTALLED.
3. THE ACTUAL SCHEDULE FOR IMPLEMENTING ESC MEASURES WILL BE DETERMINED BY PROJECT CONSTRUCTION PROGRESS.
4. NO ESC MEASURE(S) SHALL BE REMOVED WITHOUT APPROVAL OF COUNTY ESC INSPECTOR FOR THE PROJECT.
5. ADDITIONAL ESC MEASURES MAY BE REQUIRED DUE TO SITE CONDITIONS AT TIME OF CONSTRUCTION ACTIVITY. CONTRACTOR SHALL PROVIDE ANY ADDITIONAL ESC MEASURES AS NEED TO CONTROL SEDIMENT RUN-OFF AT NO ADDITIONAL COST TO OWNER.
6. CONTRACTOR MAY LOCATE STOCKPILES FOR TOPSOIL, SUITABLE FILL WITHIN LIMITS OF CONSTRUCTION. CONTRACTOR SHALL ENCIRCLE STOCK PILE WITH SILT FENCE, TEMPORARY/PERMANENTLY SEED AND MAINTAIN THE STOCKPILE PER THE VESCH.
7. CONTRACTOR SHALL PERFORM CONSTRUCTION SEQUENCING SUCH THAT EARTH MATERIALS ARE EXPOSED FOR THE LEAST AMOUNT OF TIME BEFORE THEY ARE COVERED, SEEDED OR OTHERWISE STABILIZED TO PREVENT EROSION.

SEQUENCE:

1. COUNTY INSPECTOR MUST BE NOTIFIED ONE WEEK PRIOR TO THE COMMENCEMENT OF LAND DISTURBING ACTIVITIES AND ONE WEEK PRIOR TO THE FINAL INSPECTION.
2. INSTALL CONSTRUCTION ENTRANCE AND SILT FENCE (CLEARING ONLY THOSE AREAS NECESSARY TO INSTALL MEASURES).
3. BEGIN CLEARING AND GRUBBING THE SITE. ONLY AREAS OF THE SITE THAT DRAIN TO PROPERLY INSTALLED ESC MEASURE(S) MAY BE CLEARED AND GRUBBED.
4. ROUGH GRADE ELEVATED WATER TANK PAD AREA AS SHOWN ON GRADING PLAN.
5. TEMPORARILY SEED AND MULCH, THROUGHOUT CONSTRUCTION AND WITHIN 7 DAYS, DENUDED AREAS THAT WILL BE INACTIVE FOR 14 DAYS OR MORE.
6. START INSTALLATION OF ELEVATED WATER TANK.
7. START CONSTRUCTION OF TANK DRAIN LINE AND OUTLET PROTECTION. OUTLET PROTECTION TO REMAIN PERMANENTLY.
8. COMPLETE FINE GRADING AND INSTALLATION OF PERMANENT STABILIZATION OVER ALL DISTURBED AREAS.
9. PERMANENTLY STABILIZE AREAS TO BE VEGETATED (TOPSOIL, SEED AND MULCH) AS THEY ARE BROUGHT TO FINAL GRADE.
10. ALL EXISTING DENUDED/UNSTABILIZED AREAS WITHIN PROJECT AREA NOT OTHERWISE IMPROVED SHALL BE STABILIZED, PERMANENTLY SEEDED AND MULCHED.

EROSION & SEDIMENT CONTROL NOTES

ES-1: UNLESS OTHERWISE INDICATED, ALL VEGETATIVE AND STRUCTURAL EROSION AND SEDIMENT CONTROL PRACTICES WILL BE CONSTRUCTED AND MAINTAINED ACCORDING TO MINIMUM STANDARDS AND SPECIFICATIONS OF THE VIRGINIA EROSION AND SEDIMENT CONTROL HANDBOOK AND THE VIRGINIA EROSION AND SEDIMENT CONTROL REGULATIONS (4VAC50-30).

ES-2: THE PLAN-APPROVING AUTHORITY MUST BE NOTIFIED ONE WEEK PRIOR TO THE PRE-CONSTRUCTION CONFERENCE, ONE WEEK PRIOR TO THE COMMENCEMENT OF LAND DISTURBING ACTIVITY, AND ONE WEEK PRIOR TO THE FINAL INSPECTION. THE NAME OF THE RESPONSIBLE LAND DISTURBER MUST BE PROVIDED TO THE PLAN-APPROVING AUTHORITY PRIOR TO ACTUAL ENGAGEMENT IN THE LAND-DISTURBING ACTIVITY SHOWN ON THE APPROVED PLAN. IF THE NAME IS NOT PROVIDED PRIOR TO ENGAGING IN THE LAND-DISTURBING ACTIVITY, THE PLAN'S APPROVAL WILL BE REVOKED.

ES-3: ALL EROSION AND SEDIMENT CONTROL MEASURES ARE TO BE PLACED PRIOR TO OR AS THE FIRST STEP IN CLEARING.

ES-4: A COPY OF THE APPROVED EROSION AND SEDIMENT CONTROL PLAN SHALL BE MAINTAINED ON THE SITE AT ALL TIMES.

ES-5: PRIOR TO COMMENCING LAND DISTURBING ACTIVITIES IN AREAS OTHER THAN INDICATED ON THESE PLANS (INCLUDING, BUT NOT LIMITED TO, OFF-SITE BORROW OR WASTE AREAS), THE CONTRACTOR SHALL SUBMIT A SUPPLEMENTARY EROSION CONTROL PLAN TO THE OWNER FOR REVIEW AND APPROVAL BY THE PLAN-APPROVING AUTHORITY.

ES-6: THE CONTRACTOR IS RESPONSIBLE FOR INSTALLATION OF ANY ADDITIONAL EROSION CONTROL MEASURES NECESSARY TO PREVENT EROSION AND SEDIMENTATION AS DETERMINED BY THE PLAN-APPROVING AUTHORITY.

ES- 7: ALL DISTURBED AREAS ARE TO DRAIN TO APPROVED SEDIMENT CONTROL MEASURES AT ALL TIMES DURING LAND DISTURBING ACTIVITIES AND DURING SITE DEVELOPMENT UNTIL FINAL STABILIZATION IS ACHIEVED, AFTER WHICH, UPON APPROVAL OF THE PLAN-APPROVING AUTHORITY, THE CONTROLS SHALL BE REMOVED. TRAPPED SEDIMENT AND THE DISTURBED SOIL AREAS RESULTING FROM THE REMOVAL OF TEMPORARY MEASURES SHALL BE PERMANENTLY STABILIZED TO PREVENT FURTHER EROSION AND SEDIMENTATION.

ES-8: DURING DEWATERING OPERATIONS, WATER SHALL BE PUMPED INTO AN APPROVED FILTERING DEVICE.

ES-9: THE CONTRACTOR SHALL INSPECT ALL EROSION CONTROL MEASURES AT LEAST EVERY 2 WEEKS AND IMMEDIATELY AFTER EACH RUNOFF-PRODUCING RAINFALL EVENT. ANY NECESSARY REPAIRS OR CLEANUP TO MAINTAIN THE EFFECTIVENESS OF THE EROSION CONTROL DEVICES SHALL BE MADE IMMEDIATELY.

ES-10: THE CONTRACTOR IS RESPONSIBLE FOR THE DAILY REMOVAL OF SEDIMENT THAT HAS BEEN TRANSPORTED ONTO A PAVED OR PUBLIC ROAD SURFACE.

ES-11: SEEDING OPERATIONS SHALL BE INITIATED WITHIN 7 DAYS AFTER REACHING FINAL GRADE OR UPON SUSPENSION OF GRADING OPERATIONS FOR ANTICIPATED DURATION OF GREATER THAN 30 DAYS OR UPON COMPLETION OF GRADING OPERATIONS FOR A SPECIFIC AREA.

ES-12: THE CONTRACTOR SHALL BE RESPONSIBLE FOR PREVENTING SURFACE AND AIR MOVEMENT OF DUST FROM EXPOSED SOILS WHICH MAY PRESENT HEALTH HAZARDS, TRAFFIC SAFETY PROBLEMS, OR HARM ANIMAL OR PLANT LIFE.

ES-13: A VIRGINIA STORMWATER MANAGEMENT PROGRAM PERMIT (VSMPP) FOR THE DISCHARGE OF STORMWATER FROM CONSTRUCTION ACTIVITIES IS REQUIRED FOR PROJECTS DISTURBING 1 ACRE OR GREATER. A VSMPP IS ALSO REQUIRED FOR PROJECTS DISTURBING 2,500 SQUARE FEET OR GREATER IN A DESIGNATED CHESAPEAKE BAY PRESERVATION AREA. VISIT THE VIRGINIA STORMWATER MANAGEMENT PROGRAM PERMITTING WEB PAGE AT HTTP://WWW.DEQ.VIRGINIA.GOV/PROGRAMS/WATER/STORMWATERMANAGEMENT/VSMPPERMITS.ASPX FOR MORE INFORMATION.

MINIMUM STANDARDS

MS-1. PERMANENT OR TEMPORARY SOIL STABILIZATION SHALL BE APPLIED TO DENUDED AREAS WITHIN SEVEN DAYS AFTER FINAL GRADE IS REACHED ON ANY PORTION OF THE SITE. TEMPORARY SOIL STABILIZATION SHALL BE APPLIED WITHIN SEVEN DAYS TO DENUDED AREAS THAT MAY NOT BE AT FINAL GRADE BUT WILL REMAIN DORMANT (UNDISTURBED) FOR LONGER THAN 30 DAYS. PERMANENT STABILIZATION SHALL BE APPLIED TO AREAS THAT ARE TO BE LEFT DORMANT FOR MORE THAN ONE YEAR.

MS-2. DURING CONSTRUCTION OF THE PROJECT, SOIL STOCK PILES SHALL BE STABILIZED OR PROTECTED WITH SEDIMENT TRAPPING MEASURES. THE CONTRACTOR IS RESPONSIBLE FOR THE TEMPORARY PROTECTION AND PERMANENT STABILIZATION OF ALL SOIL STOCKPILES ON SITE AS WELL AS SOIL INTENTIONALLY TRANSPORTED FROM THE PROJECT SITE.

MS-3. A PERMANENT VEGETATIVE COVER SHALL BE ESTABLISHED ON DENUDED AREAS NOT OTHERWISE PERMANENTLY STABILIZED. PERMANENT VEGETATION SHALL NOT BE CONSIDERED ESTABLISHED UNTIL A GROUND COVER IS ACHIEVED THAT, IN THE OPINION OF DCR/DSWC, IS UNIFORM, MATURE ENOUGH TO SURVIVE AND WILL INHIBIT EROSION.

MS-4. SEDIMENT BASINS AND TRAPS, PERIMETER DIKES, SEDIMENT BARRIERS AND OTHER MEASURES INTENDED TO TRAP SEDIMENT SHALL BE CONSTRUCTED AS A FIRST STEP IN ANY LAND-DISTURBING ACTIVITY AND SHALL BE MADE FUNCTIONAL BEFORE UPSLOPE LAND DISTURBANCE TAKES PLACE.

MS-5. STABILIZATION MEASURES SHALL BE APPLIED TO EARTHEN STRUCTURES SUCH AS DAMS, DIKES AND DIVERSIONS IMMEDIATELY AFTER INSTALLATION.

MS-6. SURFACE RUNOFF FROM DISTURBED AREAS THAT IS COMPRISED OF FLOW FROM DRAINAGE AREAS GREATER THAN OR EQUAL TO THREE ACRES SHALL BE CONTROLLED BY A SEDIMENT BASIN. THE SEDIMENT BASIN SHALL BE DESIGNED AND CONSTRUCTED TO ACCOMMODATE THE ANTICIPATED SEDIMENT LOADING FROM THE LAND-DISTURBING ACTIVITY. THE OUTFALL DEVICE OR SYSTEM DESIGN SHALL TAKE INTO ACCOUNT THE TOTAL DRAINAGE AREA FLOWING THROUGH THE DISTURBED AREA TO BE SERVED BY THE BASIN.

MS-7. CUT AND FILL SLOPES SHALL BE DESIGNED AND CONSTRUCTED IN A MANNER THAT WILL MINIMIZE EROSION. SLOPES THAT ARE FOUND TO BE ERODING EXCESSIVELY WITHIN ONE YEAR OF PERMANENT STABILIZATION SHALL BE PROVIDED WITH ADDITIONAL SLOPE STABILIZING MEASURES UNTIL THE PROBLEM IS CORRECTED.

MS-8. CONCENTRATED RUNOFF SHALL NOT FLOW DOWN CUT OR FILL SLOPES UNLESS CONTAINED WITHIN AN ADEQUATE TEMPORARY OR PERMANENT CHANNEL, FLUME OR SLOPE DRAIN STRUCTURE.

MS-9. WHENEVER WATER SEEPS FROM A SLOPE FACE, ADEQUATE DRAINAGE OR OTHER PROTECTION SHALL BE PROVIDED.

MS-10. ALL STORM SEWER INLETS THAT ARE MADE OPERABLE DURING CONSTRUCTION SHALL BE PROTECTED SO THAT SEDIMENT-LADEN WATER CANNOT ENTER THE CONVEYANCE SYSTEM WITHOUT FIRST BEING FILTERED OR OTHERWISE TREATED TO REMOVE SEDIMENT.

MS-11. BEFORE NEWLY CONSTRUCTED STORMWATER CONVEYANCE CHANNELS ARE MADE OPERATIONAL, ADEQUATE OUTLET PROTECTION AND ANY REQUIRED TEMPORARY OR PERMANENT CHANNEL LINING SHALL BE INSTALLED IN BOTH THE CONVEYANCE CHANNEL AND RECEIVING CHANNEL.

MS-12. WHEN WORK IN A LIVE WATERCOURSE IS PERFORMED, PRECAUTIONS SHALL BE TAKEN TO MINIMIZE ENCROACHMENT, CONTROL SEDIMENT TRANSPORT AND STABILIZE THE WORK AREA TO THE GREATEST EXTENT POSSIBLE DURING CONSTRUCTION. NONERODIBLE MATERIAL SHALL BE USED FOR THE CONSTRUCTION OF CAUSEWAYS AND COFFERDAMS. EARTHEN FILL MAY BE USED FOR THESE STRUCTURES IF ARMORED BY NONERODIBLE COVER MATERIALS.

MS-13. WHEN A LIVE WATERCOURSE MUST BE CROSSED BY CONSTRUCTION VEHICLE MORE THAN TWICE IN ANY SIX MONTH PERIOD, A TEMPORARY STREAM CROSSING CONSTRUCTED OF NONERODIBLE MATERIAL SHALL BE PROVIDED.

MS-14. ALL APPLICABLE FEDERAL, STATE AND LOCAL REGULATIONS PERTAINING TO WORKING IN OR CROSSING LIVE WATERCOURSES SHALL BE MET.

MS-15. THE BED AND BANKS OF A WATERCOURSE SHALL BE STABILIZED IMMEDIATELY AFTER WORK IN THE WATER COURSE IS COMPLETED.

MS-16. NO MORE THAN 500 LINEAR FEET OF TRENCH MAY BE OPENED AT ONE TIME. ALL TRENCHES ARE TO BE BACKFILLED EACH DAY, SEEDED AND MULCHED IMMEDIATELY. IN THE EVENT THAT TRENCHES CANNOT BE BACKFILLED IMMEDIATELY, EROSION CONTROL MEASURES WILL BE INSTALLED.

MS-17. WHERE CONSTRUCTION VEHICLE ACCESS ROUTES INTERSECT PAVED PUBLIC ROADS, PROVISIONS SHALL BE MADE TO MINIMIZE THE TRANSPORT OF SEDIMENT BY VEHICULAR TRACKING ONTO THE PAVED SURFACE. WHERE SEDIMENT IS TRANSPORTED ONTO A PUBLIC ROAD SURFACE, THE ROAD SHALL BE CLEANED THOROUGHLY AT THE END OF EACH DAY. SEDIMENT SHALL BE REMOVED FROM THE ROADS BY SHOVELING OR SWEEPING AND TRANSPORTED TO A SEDIMENT CONTROL DISPOSAL AREA. STREET WASHING SHALL BE ALLOWED ONLY AFTER SEDIMENT IS REMOVED IN THIS MANNER.

MS-18. ALL TEMPORARY EROSION CONTROL MEASURES SHALL BE REMOVED WITHIN 30 DAYS AFTER FINAL SITE STABILIZATION IS ACHIEVED, AS DETERMINED BY THE DEPARTMENT OF CONSERVATION AND RECREATION, DIVISION OF SOIL AND WATER CONSERVATION. TRAPPED SEDIMENT AND THE DISTURBED SOIL AREAS RESULTING FROM THE DISPOSITION OF TEMPORARY MEASURES SHALL BE PERMANENTLY STABILIZED TO PREVENT FURTHER EROSION AND SEDIMENTATION.

MS-19. PROPERTIES AND WATERWAYS DOWNSTREAM FROM DEVELOPMENT SITES SHALL BE PROTECTED FROM SEDIMENT DEPOSITION, EROSION AND DAMAGE DUE TO INCREASES IN VOLUME, VELOCITY AND PEAK FLOW RATE OF STORMWATER RUNOFF. (SEE VIRGINIA REGULATIONS 4VAC50-30 EROSION AND SEDIMENT CONTROL REGULATIONS.)

LIMITS OF DISTURBANCE = 0.58 ACRES

Dewberry

Dewberry Engineers Inc.
4805 Lake Brook Drive, Suite 200
Glen Allen, Virginia 23060
PHONE: 804.290.7957
FAX: 804.290.7928
www.dewberry.com

ZION CROSSROADS
ELEVATED WATER STORAGE TANK

FLUVANNA COUNTY
DEPARTMENT OF PUBLIC WORKS

FLUVANNA COUNTY, VA

KEY PLAN

SEAL

COMMONWEALTH OF VIRGINIA
DANYLO A. VILLHAUER
Lic. No. 046419
5/4/2018
PROFESSIONAL ENGINEER

SCALE

No.	DATE	BY	Description

REVISIONS

DRAWN BY	BMM / JEH
APPROVED BY	DAV
CHECKED BY	BMM
DATE	MAY 2018

TITLE

EROSION & SEDIMENT CONTROL NOTES

PROJECT NO. 50078862

C4.0

OUTLET PROTECTION SUMMARY TABLE

OUTFALL #	LENGTH (FT.)	WIDTH (FT.)	DEPTH (FT.)	RIPRAP CLASS	D_{50} DIA. (FT.)	NOTES
OVERFLOW PIPE FROM TANK	8	11.75	1.67	I	1.1	

Source: USDA-SCS

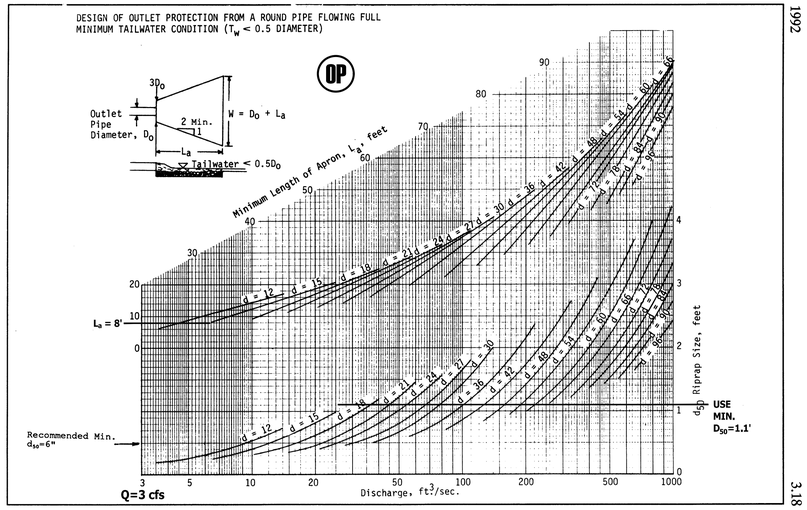

Plate 3.18-3

1992

3.18

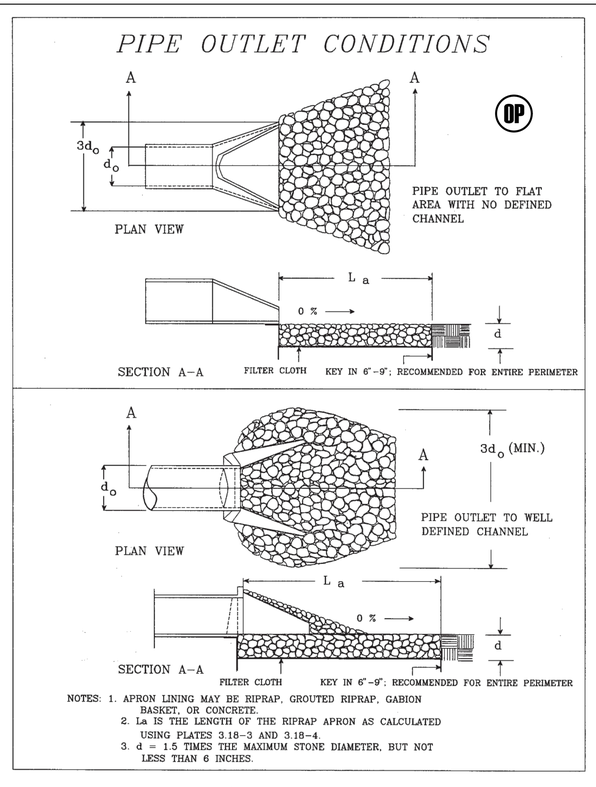

NOTES: 1. APRON LINING MAY BE RIPRAP, GROUTED RIPRAP, GABION BASKET, OR CONCRETE.
2. La IS THE LENGTH OF THE RIPRAP APRON AS CALCULATED USING PLATES 3.18–3 AND 3.18–4.
3. d = 1.5 TIMES THE MAXIMUM STONE DIAMETER, BUT NOT LESS THAN 6 INCHES.

Source: Va. DSWC

Plate 3.18-1

TABLE 3.35–A
ORGANIC MULCH MATERIALS AND APPLICATION RATES

MULCHES:	RATES: PER ACRE	RATES: PER 1000 SQ. FT.	NOTES:
STRAW OR HAY	1½ – 2 TONS (MINIMUM 2 TONS FOR WINTER COVER)	70–90 LBS.	FREE FROM WEEDS AND COARSE MATTER. MUST BE ANCHORED. SPREAD WITH MULCH BLOWER OR BY HAND.
FIBER MULCH	MINIMUM 1500 LBS.	35 LBS.	DO NOT USE AS MULCH FOR WINTER COVER OR DURING HOT, DRY PERIODS.* APPLY AS SLURRY.
CORN STALKS	4 – 6 TONS	185–275 LBS.	CUT OR SHREDDED IN 4–6" LENGTHS. AIR–DRIED. DO NOT USE IN FINE TURF AREAS. APPLY WITH MULCH BLOWER OF BY HAND.
WOOD CHIPS	4 – 6 TONS	185–275 LBS.	FREE OF COARSE MATTER. AIR–DRIED. TREAT WITH 12 LBS NITROGEN PER TON. DO NOT USE IN FINE TURF AREAS. APPLY WITH MULCH BLOWER, CHIP HANDLER, OR BY HAND.
BARK CHIPS OR SHREDDED BARK	50 – 70 CU. YDS.	1–2 CU. YDS.	FREE COARSE MATTER. AIR–DRIED. DO NOT USE IN FINE TURF AREAS. APPLY WITH MULCH BLOWER, CHIP HANDLER, OR BY HAND.

* WHEN FIBER MULCH IS THE ONLY AVAILABLE MULCH DURING PERIODS WHEN STRAW SHOULD BE USED, APPLY AT A MINIMUM RATE OF 2000 LBS./AC. OR 45 LBS./1000 SQ. FT.

MU MULCHING

CONSTRUCTION OF A SILT FENCE
(WITHOUT WIRE SUPPORT)

1. SET THE STAKES.
2. EXCAVATE A 4"x 4" TRENCH UPSLOPE ALONG THE LINE OF STAKES.
3. STAPLE FILTER MATERIAL TO STAKES AND EXTEND IT INTO THE TRENCH.
4. BACKFILL AND COMPACT THE EXCAVATED SOIL

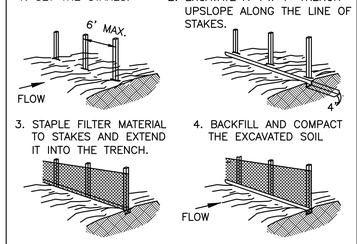

SHEET FLOW INSTALLATION
(PERSPECTIVE VIEW)

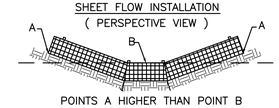

POINTS A HIGHER THAN POINT B PLACEMENT IN DRAINAGE WAY
(FRONT ELEVATION)

SF SILT FENCE
NOT TO SCALE

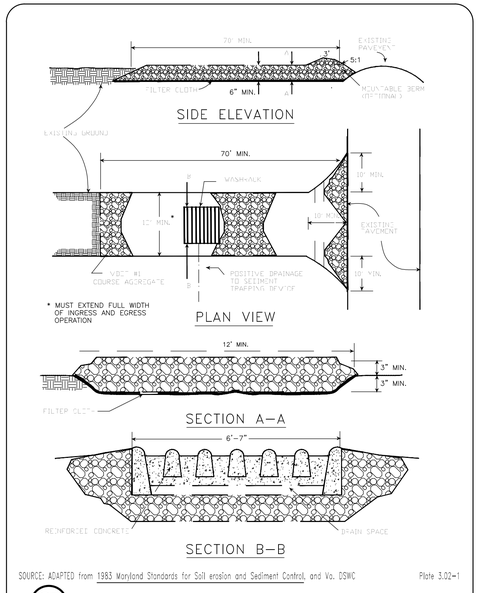

SOURCE: ADAPTED from 1983 Maryland Standards for Soil erosion and Sediment Control, and Va. DSWC

Plate 3.02-1

CE STONE CONSTRUCTION ENTRANCE

TABLE 3.31–B
ACCEPTABLE TEMPORARY SEEDING PLANT MATERIALS
"QUICK REFERENCE FOR ALL REGIONS"

PLANTING DATES	SPECIES	RATE (LBS./ACRE)
SEPT. 1 – FEB 15	50/50 MIX OF ANNUAL RYEGRASS (LOLIUM MULTI–FLORUM) & CEREAL (WINTER) RYE (SECALE CEREALE)	50–100
FEB. 16 – APR. 30	ANNUAL RYEGRASS (LOLIUM MULTI–FLORUM)	60–100
MAY 1 – AUG 31	GERMAN MILLET (SETARIA ITALICA)	50

FERTILIZER & LIME

- APPLY 10–20–10 FERTILIZER AT A RATE OF 600 lbs./acre (OR 14 lbs./1,000 sq. ft.)
- LIME AND FERTILIZER SHALL BE INCORPORATED INTO THE TOP 2 TO 4 INCHES OF THE SOIL IF POSSIBLE.

TS TEMPORARY SEEDING SPECIFICATIONS FOR ALL REGIONS
TABLE 3.31–B
(REVISED JUNE 2003)

SEED[1]		
LAND USE	SPECIES	APPLICATION PER ACRE
MINIMUM CARE LAWN (COMMERCIAL OR RESIDENTIAL)	TALL FESCUE[1] PERENNIAL RYEGRASS KENTUCKY BLUEGRASS[1]	95–100% 0–5% 0–5% TOTAL: 175–200 LBS.
HIGH–MAINTENANCE LAWN	TALL FESCUE[1]	TOTAL: 200–250 LBS.
GENERAL SLOPE (3:1 OR LESS)	TALL FESCUE RED TOP GRASS OR CREEPING RED FESCUE SEASONAL NURSE CROP	128 LBS. 2 LBS. 20 LBS. TOTAL: 150 LBS.
LOW MAINTENANCE SLOPE (STEEPER THAN 3:1)	TALL FESCUE RED TOP GRASS OR CREEPING RED FESCUE[2] SEASONAL NURSE CROP CROWNVETCH[3]	128 LBS. 2 LBS. 20 LBS. TOTAL: 150 LBS.

1–WHEN SELECTING VARIETIES OF TURFGRASS, USE THE VIRGINIA CROP IMPROVEMENT ASSOCIATION (VCIA) RECOMMENDED TURFGRASS VARIETY LIST. QUALITY SEED WILL BEAR A LABEL INDICATING THAT THEY ARE APPROVED BY VCIA. A CURRENT TURFGRASS VARIETY LIST IS AVAILABLE AT THE LOCAL COUNTY EXTENSION OFFICE OR THROUGH VCIA AT 804.746.4884 OR AT http://sudan.cses.vt.edu/html/Turf/turf/publications/publications2.html

2–USE SEASONAL NURSE CROP IN ACCORDANCE WITH SEEDING DATES AS STATED BELOW:

FEBRUARY 16 – APRIL 30.....	ANNUAL RYE
MAY 1 – AUGUST 15.....	FOXTAIL MILLET
AUGUST 16 – OCTOBER 31.....	ANNUAL RYE
NOVEMBER 1 – FEBRUARY 15.....	WINTER RYE

3–SUBSTITUTE SERICEA LESPEDEZA FOR CROWNVETCH EAST OF FARMVILLE, VA (MAY THROUGH SEPTEMBER USE HULLED SEED, ALL OTHER PERIODS, USE UNHULLED SERICEA). IF FLATPEA IS USED, INCREASE RATE TO 30 LBS/ACRE. IF WEEPING LOVEGRASS IS USED, INCLUDE IN ANY SLOPE OR LOW MAINTENANCE MIXTURE DURING WARMER SEEDING PERIODS, INCREASE TO 30–40.

FERTILIZER & LIME

- APPLY 10–20–10 FERTILIZER AT A RATE OF 1000 lbs./acre (OR 23 lbs./1,000 sq. ft.)
- LIME AND FERTILIZER SHALL BE INCORPORATED INTO THE TOP 4 TO 6 INCHES OF THE SOIL BY DISCING OR OTHER MEANS WHENEVER POSSIBLE.

NOTE:
1.)A SOIL TEST IS NECESSARY TO DETERMINE THE ACTUAL AMOUNT OF LIME REQUIRED TO ADJUST THE SOIL pH OF SITE.
2.)WHEN APPLYING SLOWLY AVAILABLE NITROGEN USE RATES AVAILABLE IN EROSION & SEDIMENT CONTROL TECHNICAL BULLETIN #4, 2003 NUTRIENT MANAGEMENT FOR DEVELOPMENT SITES AT: http://ww.dcr.state.va.us/sw/e&s.htm#pubs

PS PERMANENT SEEDING SPECIFICATIONS FOR PIEDMONT AREA

Dewberry
Dewberry Engineers Inc.
4805 Lake Brook Drive, Suite 200
Glen Allen, Virginia 23060
PHONE: 804.290.7957
FAX: 804.290.7928
www.dewberry.com

ZION CROSSROADS
ELEVATED WATER STORAGE TANK

FLUVANNA COUNTY
DEPARTMENT OF PUBLIC WORKS

FLUVANNA COUNTY, VA

KEY PLAN

SEAL

COMMONWEALTH OF VIRGINIA
DANYLO A. VILLIHAUER
Lic. No. 046419
5/4/2018
PROFESSIONAL ENGINEER

SCALE

No.	DATE	BY	Description

REVISIONS

DRAWN BY	BMM / JEH
APPROVED BY	DAV
CHECKED BY	BMM
DATE	MAY 2018

TITLE

EROSION & SEDIMENT CONTROL NOTES AND DETAILS

PROJECT NO. 50078862

C4.1

NOTE:
1. REFER TO ORIENTATION PLANS FOR LAYOUT DIMENSIONS OF ALL PIPING
2. PENETRATIONS FOR PIPING THROUGH TANK RINGWALL FOUNDATION SHALL BE PER TANK MANUFACTURERS RECOMMENDATIONS
3. ALL VALVES SHALL BE PAINTED ACCORDING TO THE DESIGNATION OF NORMALLY CLOSED (NC) OR NORMALLY OPEN (NO) AS INDICATED ON PLAN SHEET I1.0. COORDINATE FINAL COLOR SELECTION WITH OWNER
   i. NORMALLY OPEN – GREEN
   ii. NORMALLY CLOSED – RED
4. ALL UNDERGROUND PIPING BENEATH TANK BASE SHALL BE ENCASED IN CONCRETE (SEE CONCRETE ENCASEMENT DETAIL)
5. SEE SITE PLAN AND M2.0 FOR UNDERGROUND PIPE LAYOUTS.

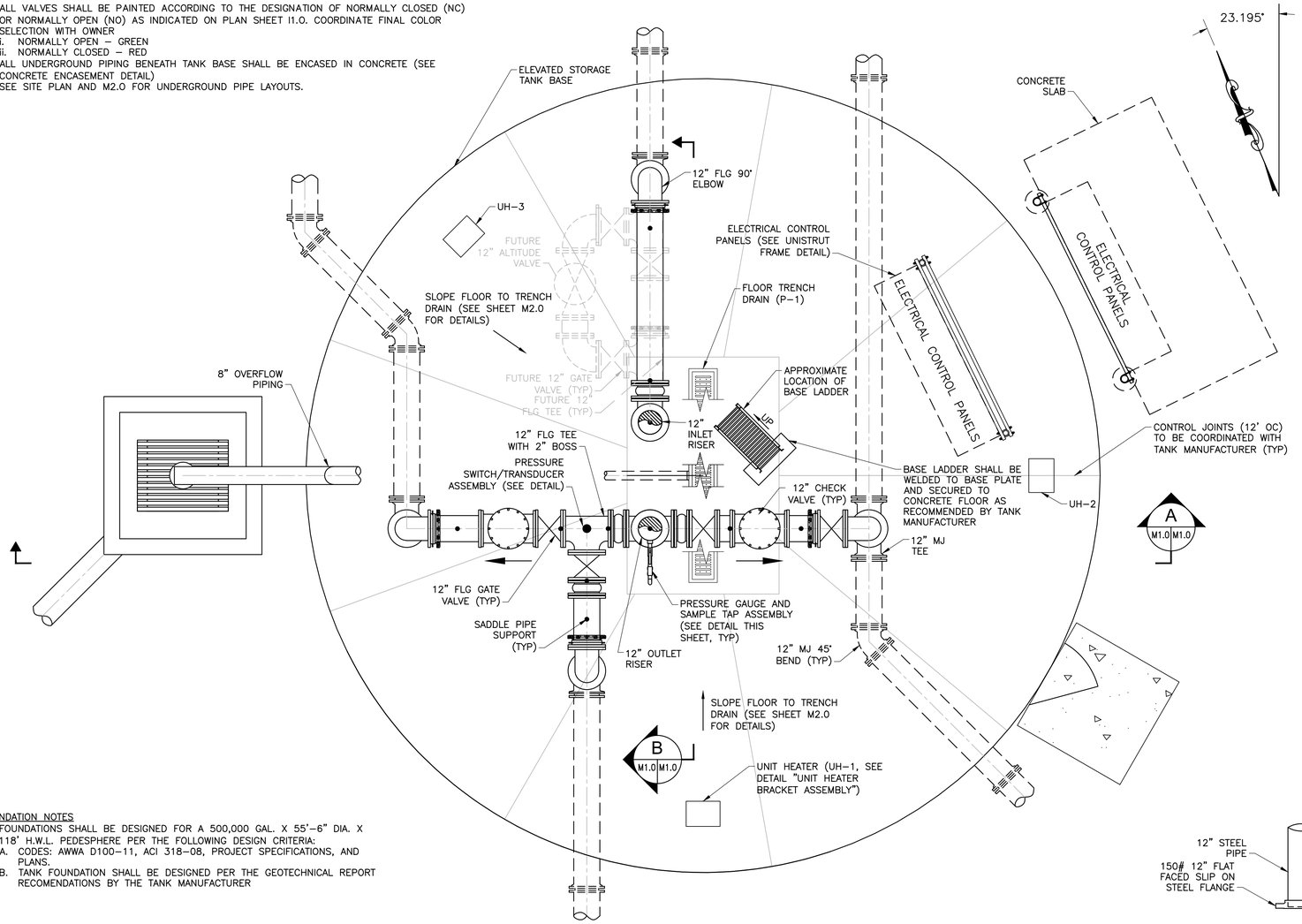

ELEVATED STORAGE TANK PIPING LAYOUT
SCALE: 3/8" = 1'-0"

FOUNDATION NOTES
1. FOUNDATIONS SHALL BE DESIGNED FOR A 500,000 GAL. X 55'-6" DIA. X 118' H.W.L. PEDESPHERE PER THE FOLLOWING DESIGN CRITERIA:
   A. CODES: AWWA D100-11, ACI 318-08, PROJECT SPECIFICATIONS, AND PLANS.
   B. TANK FOUNDATION SHALL BE DESIGNED PER THE GEOTECHNICAL REPORT RECOMENDATIONS BY THE TANK MANUFACTURER

PLUMBING FIXTURE SCHEDULE

MARK	FIXTURE	MANUFACTURER	DESCRIPTION (MODEL)	ROUGH-IN SIZES	DESCRIPTION (MODEL)
P-1	TRENCH FLOOR DRAIN	ABT	TRENCHFORMER	4"	PROVIDE MJxPE TEE CAST INTO TRENCH DRAIN FOR OUTLET. PROVIDE WITH TR12-12.502D.FB HIGH INTAKE SLOTTED DUCTILE IRON GRATING.

UNIT HEATER SCHEDULE

UNIT DESIGNATION	AREA SERVED	CAPACITY (KW)	HEATER ELECTRIC	FAN ELECTRIC	AIR THROW	TYPE	MANUFACTURER	MODEL NO
UH-1 UH-2 UH-3	BASE CONE	10.0 KW	480 3 PHASE 12.9 AMPS	480 3 PHASE 1/15 HP	850 CFM 27 HORIZONTAL	CEILING MOUNTED TO BRACKET	CHROMALOX	HTH-10-43-30

NOTES:
1. INSTALL WITH WALL MOUNTED THERMOSTAT.
2. INSTALL PER TANK MANUFACTURERS AND UNIT HEATER MANUFACTURERS RECOMMENDATIONS.
3. UNIT HEATERS SHALL HAVE INTEGRAL DISCONNECT SWITCH.
4. SEE UNIT HEATER BRACKET ASSEMBLY FOR DETAIL.

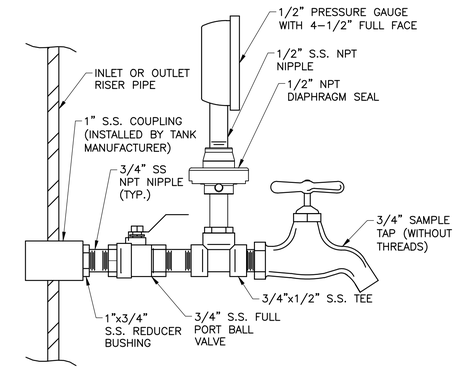

PRESSURE GAUGE AND SAMPLE TAP ASSEMBLY
SCALE: NOT TO SCALE

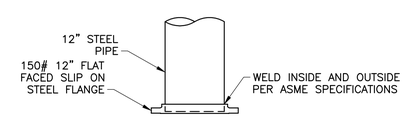

SLIP ON FLANGE
SCALE: NOT TO SCALE

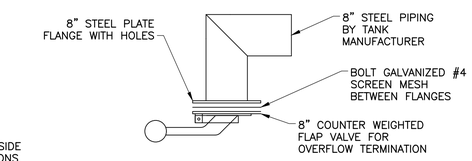

OVERFLOW TERMINATION ASSEMBLY
SCALE: NOT TO SCALE

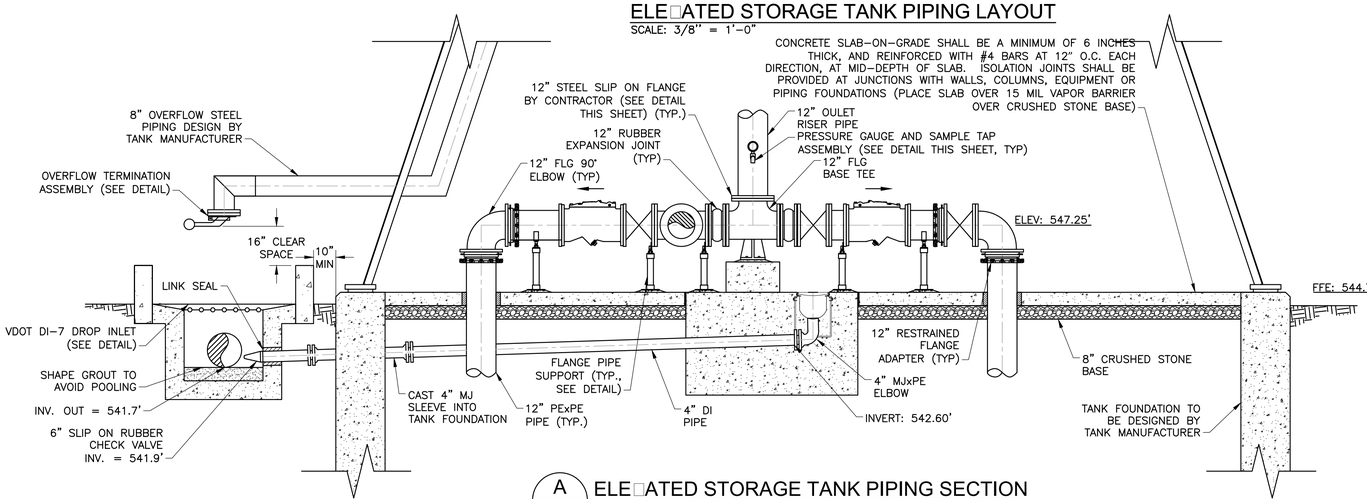

A ELEVATED STORAGE TANK PIPING SECTION
SCALE: 3/8" = 1'-0"

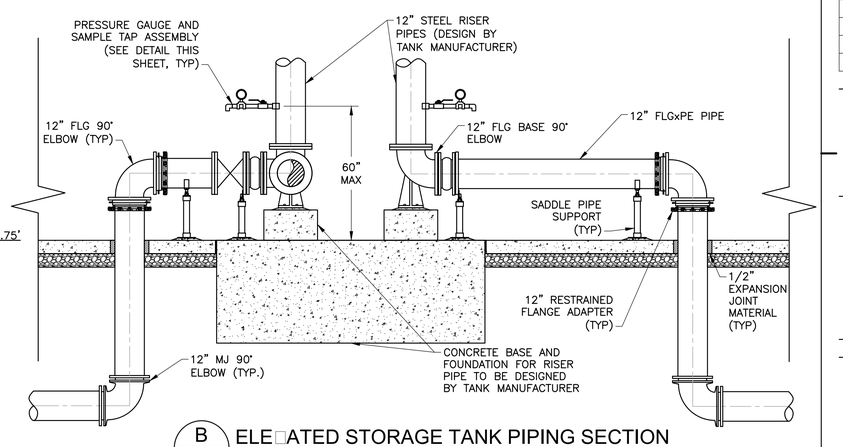

B ELEVATED STORAGE TANK PIPING SECTION
SCALE: 3/8" = 1'-0"

Dewberry
Dewberry Engineers Inc.
4805 Lake Brook Drive, Suite 200
Glen Allen, Virginia 23060
PHONE: 804.290.7957
FAX: 804.290.7928
www.dewberry.com

ZION CROSSROADS
ELEVATED WATER STORAGE TANK

FLUVANNA COUNTY
DEPARTMENT OF PUBLIC WORKS

FLUVANNA COUNTY, VA

KEY PLAN

SEAL
COMMONWEALTH OF VIRGINIA
DANYLO A. VILLIHAUER
Lic. No. 046419
5/4/2018
PROFESSIONAL ENGINEER

SCALE

No.	DATE	BY	Description

REVISIONS

DRAWN BY	BMM / JEH
APPROVED BY	DAV
CHECKED BY	BMM
DATE	MAY 2018

TITLE
TANK PIPING LAYOUT

PROJECT NO. 50078862

M1.0

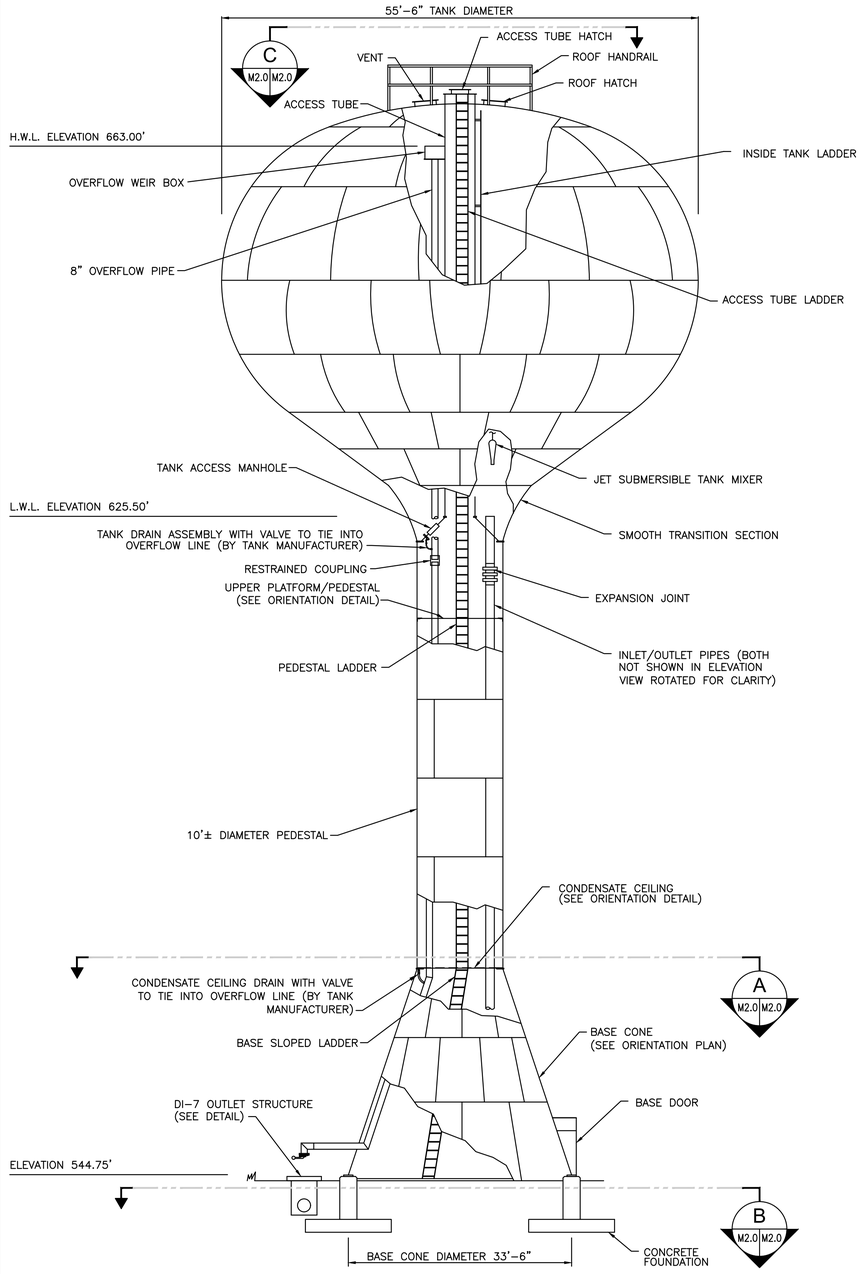

TANK ELE□ATION □IEW

SCALE: NOT TO SCALE

NOTE:
1. NOMINAL CAPACITY OF THE TANK SHALL BE 500,000 GALLONS.
2. TANK APPURTENANCES ARE ROTATED FOR CLARITY. SEE ORIENTATION PLAN FOR LAYOUT
3. SEE CONTRACT SPECIFICATIONS FOR DESIGN CRITERIA AND DETAILS
4. SEE CONTRACT SPECIFICATIONS FOR TANK COATING, WELDING, AND TESTING REQUIREMENTS
5. ALL HANDRAILS, PLATFORM LANDINGS, WALKWAYS, LADDERS, AND SAFETY CLIMB DEVICES SHALL CONFORM WITH CURRENT OSHA STANDARDS
6. TANK MANUFACTURER SHALL DESIGN AND SUPPLY A CATHODIC PROTECTION SYSTEM UTILIZING PASSIVE, SACRIFICIAL MAGNESIUM NODE. REFER TO PROJECT SPECIFICATIONS FOR DETAIL.

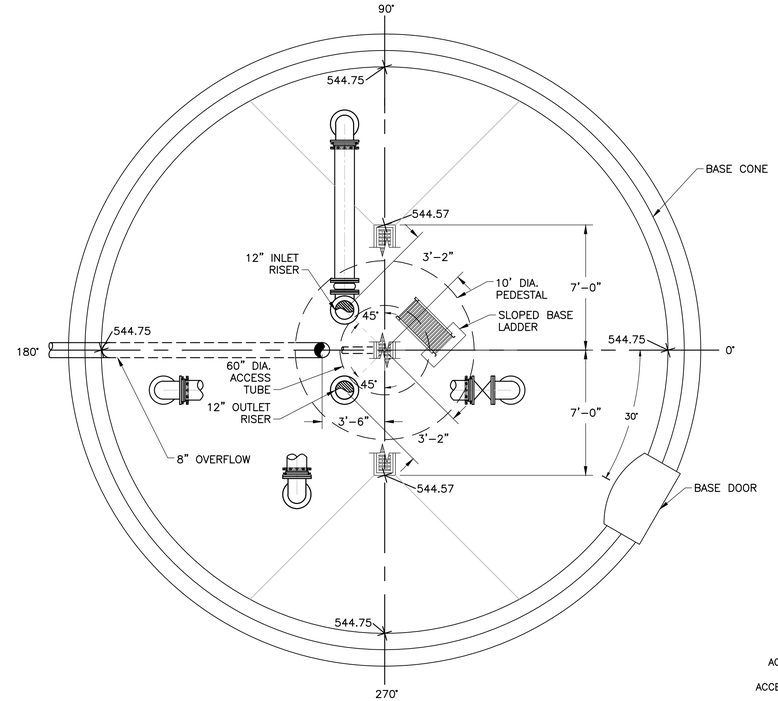

A ORIENTATION PLAN ABO□E FOUNDATION

SCALE: 1/4" = 1'-0"

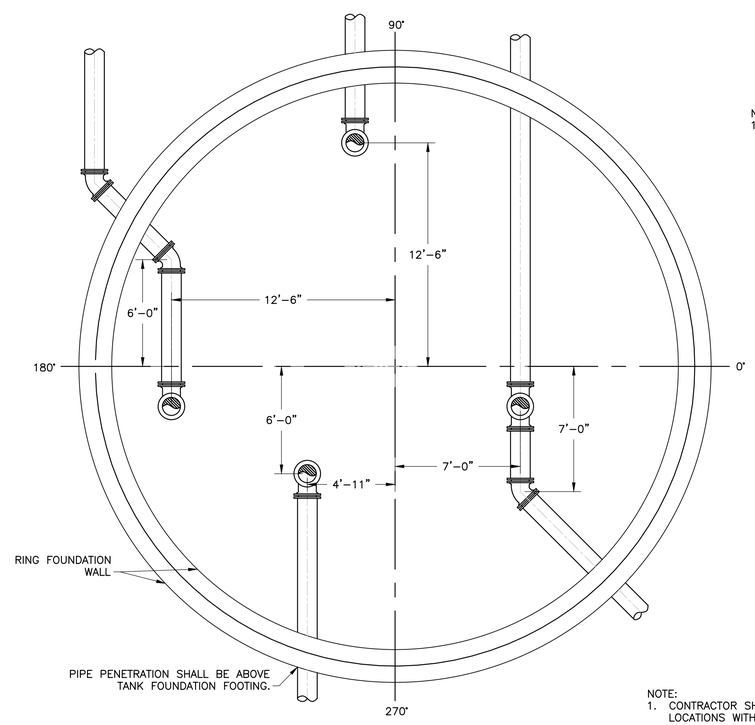

NOTE:
1. CONTRACTOR SHALL COORDINATE FINAL PIPE LOCATIONS WITH ENGINEER AND TANK MANUFACTURER AND RECEIVE APPROVAL FROM ENGINEER PRIOR TO MODIFICATIONS TO PROPOSED PIPING LAYOUT

B ORIENTATION PLAN BELOW FOUNDATION

SCALE: 1/4" = 1'-0"

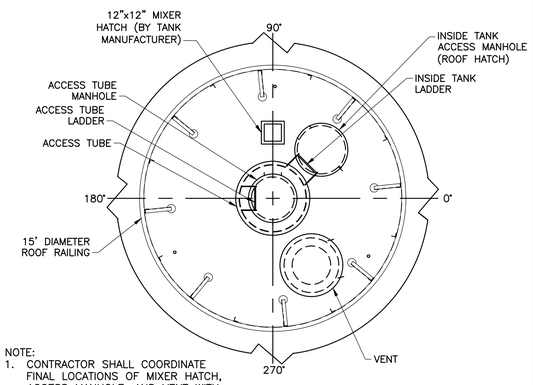

NOTE:
1. CONTRACTOR SHALL COORDINATE FINAL LOCATIONS OF MIXER HATCH, ACCESS MANHOLE, AND VENT WITH TANK MANUFACTURER AND RECEIVE APPROVAL FROM ENGINEER.

C TANK ROOF ORIENTATION

SCALE: NOT TO SCALE

Dewberry

Dewberry Engineers Inc.
4805 Lake Brook Drive, Suite 200
Glen Allen, Virginia 23060
PHONE: 804.290.7957
FAX: 804.290.7928
www.dewberry.com

ZION CROSSROADS
ELEVATED WATER STORAGE TANK

FLUVANNA COUNTY
DEPARTMENT OF PUBLIC WORKS

FLUVANNA COUNTY, VA

KEY PLAN

SEAL

COMMONWEALTH OF VIRGINIA
DANYLO A. VILLIHAUER
Lic. No. 046419
5/4/2018
PROFESSIONAL ENGINEER

SCALE

No.	DATE	BY	Description

REVISIONS

DRAWN BY	BMM / JEH
APPROVED BY	DAV
CHECKED BY	BMM
DATE	MAY 2018

TITLE

TANK ELEVATION AND ORIENTATION PLANS

PROJECT NO. 50078862

M2.0

BOS 2019-01-09 p.666/1491

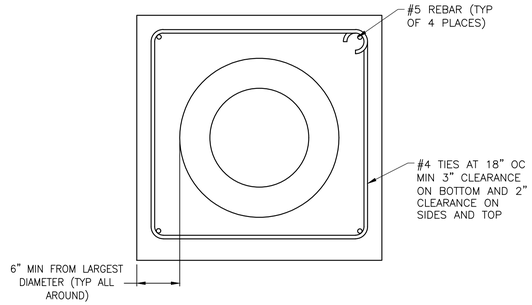

NOTES
1. CONCRETE ENCASEMENT SHALL BE PLACED AS INDICATED ON PLANS
2. CONCRETE SHALL BE 4,500 P.S.I (MIN) AT 28 DAYS IN ACCORDANCE WITH ACI-318=08
3. PIPE SHALL BE BRACED HORIZONTALLY AND VERTICALLY PRIOR TO CONCRETE POUR

PIPE ENCASEMENT DETAIL
N.T.S. Source: Dewberry

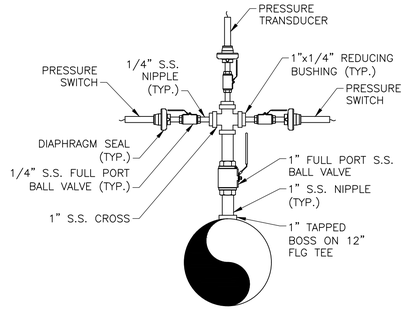

NOTES
1. ALL NIPPLES AND FITTINGS SHALL BE SCH. 40 THREADED STAINLESS STEEL.

PRESSURE SWITCH/TRANSDUCER ASSEMBLY
N.T.S. Source: Dewberry

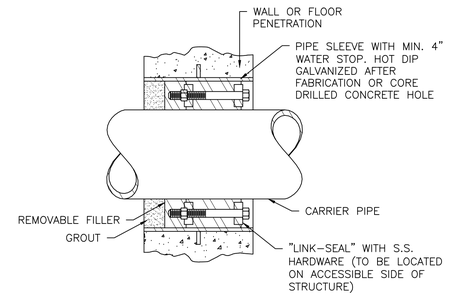

NOTES
1. HOLE SIZE AND LINK SEAL SIZE TO BE COORDINATED AS PER MANUFACTURER'S REQUIREMENTS.

LINK SEAL
N.T.S. Source: Dewberry

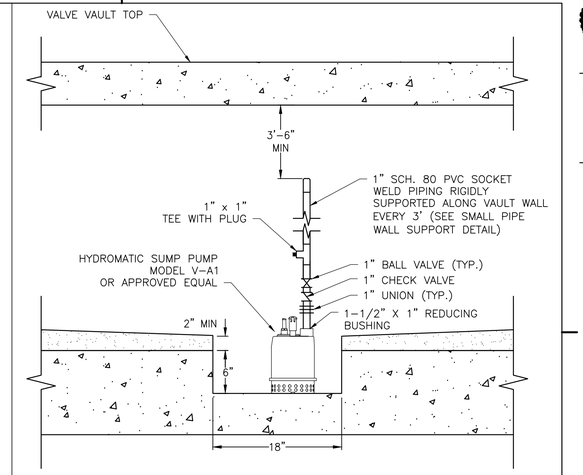

SUMP PUMP DETAIL
N.T.S. Source: Dewberry

DIMENSION TABLE				
PIPE SIZE	SUPPORT SIZE	PLATE SIZE	PLATE THICKNESS	ANCHOR BOLT DIAMETER
3"	1.5"	5"	3/8"	1/2"
4"	2"	6"	3/8"	1/2"
6"	3"	7"	3/8"	1/2"
8"-10"	4"	9"	1/2"	1/2"
12"-16"	6"	11"	1/2"	1/2"
18"-24"	8"	13.5"	5/8"	5/8"
30"	10"	16"	5/8"	5/8"
36"	12"	19"	5/8"	5/8"
42"	16"	23.5"	3/4"	3/4"
48"	18"	25"	3/4"	3/4"

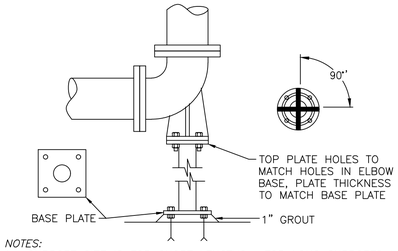

NOTES:
1. *SUPPORT SIZE IS FOR SHORT LENGTHS. FOR LONG SUPPORTS L/r RATIO SHALL BE < 100 (r = RADIUS OF GYRATION OF SUPPORT PIPE, L IS IN INCHES).*

BASE ELBOW SUPPORT
N.T.S. Source: Dewberry

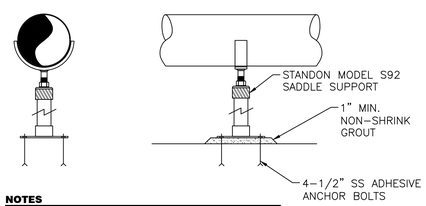

NOTES
1. *HOT DIP GALVANIZE ALL PARTS AFTER FABRICATION*

SADDLE PIPE SUPPORT
N.T.S. Source: Dewberry

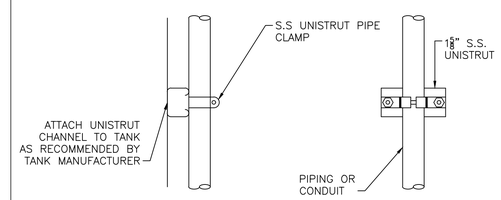

SMALL PIPE WALL SUPPORT
N.T.S. Source: Dewberry

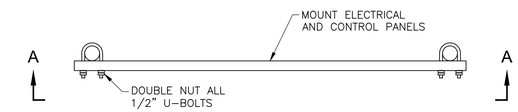

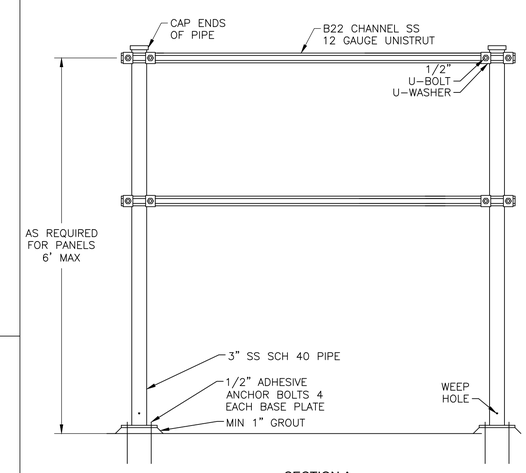

SECTION A

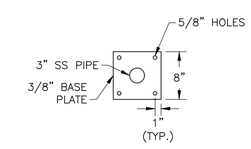

NOTES
1. PROVIDE END CAPS FOR ALL UNISTRUT CHANNEL.
2. UNISTRUT, FITTINGS, AND PIPE CLAMP FIGURE NUMBERS ARE FOR COOPER B-LINE.
3. IF ELECTRICAL RACK IS REQUIRED TO BE LONGER THAN 5' PROVIDE ADDITIONAL VERTICAL SUPPORTS AS REQUIRED.

INTERIOR ELECTRICAL RACK
N.T.S. Source: Dewberry

DIMENSION TABLE				
PIPE SIZE	SUPPORT SIZE	PLATE SIZE	PLATE THICKNESS	ANCHOR BOLT DIAMETER
3"	1.5"	5"	3/8"	1/2"
4"	2"	6"	3/8"	1/2"
6"	3"	7"	3/8"	1/2"
8"-10"	4"	9"	1/2"	1/2"
12"-16"	6"	11"	1/2"	1/2"
18"-24"	8"	13.5"	5/8"	5/8"
30"	10"	16"	5/8"	5/8"
36"	12"	19"	5/8"	5/8"
42"	16"	23.5"	3/4"	3/4"
48"	18"	25"	3/4"	3/4"

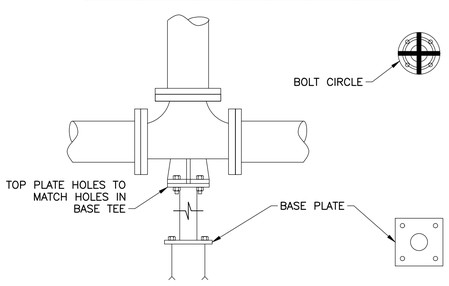

BASE TEE SUPPORT
N.T.S. Source: Dewberry

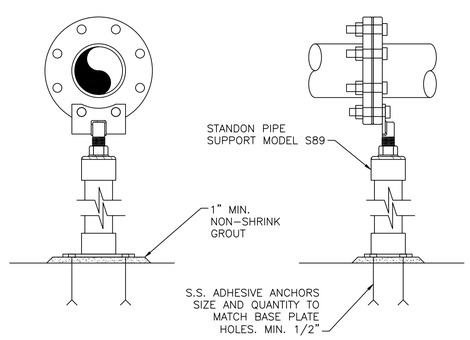

NOTES
1. HOT DIP GALVANIZE ALL PARTS AFTER FABRICATION

FLANGE PIPE SUPPORT
N.T.S. Source: Dewberry

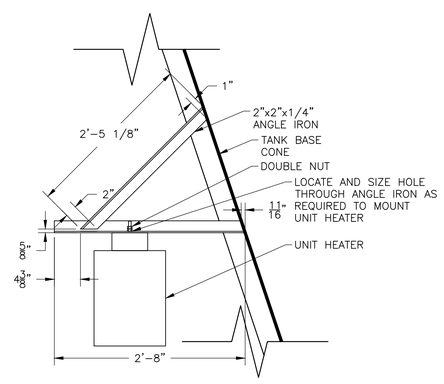

NOTES
1. LOCATE BOTTOM OF UNIT HEATER AT 7'-0" AFF.
2. TANK MANUFACTURER SHALL WELD BRACKET TO TANK STRUCTURE.
3. CONTRACTOR SHALL COORDINATE LOCATION AND HEIGHT WITH TANK MANUFACTURER.
4. PROVIDE HORIZONTAL DISCHARGE CEILING BRACKET FOR UNIT HEATER

UNIT HEATER BRACKET ASSEMBLY
N.T.S.

Dewberry
Dewberry Engineers Inc.
4805 Lake Brook Drive, Suite 200
Glen Allen, Virginia 23060
PHONE: 804.290.7957
FAX: 804.290.7928
www.dewberry.com

ZION CROSSROADS ELEVATED WATER STORAGE TANK

FLUVANNA COUNTY
DEPARTMENT OF PUBLIC WORKS

FLUVANNA COUNTY, VA

KEY PLAN

SEAL

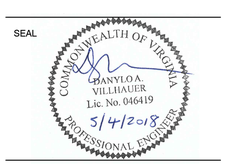

SCALE

No.	DATE	BY	Description

REVISIONS

DRAWN BY	BMM / JEH
APPROVED BY	DAV
CHECKED BY	BMM
DATE	MAY 2018

TITLE

DETAILS

PROJECT NO. 50078862

M3.0

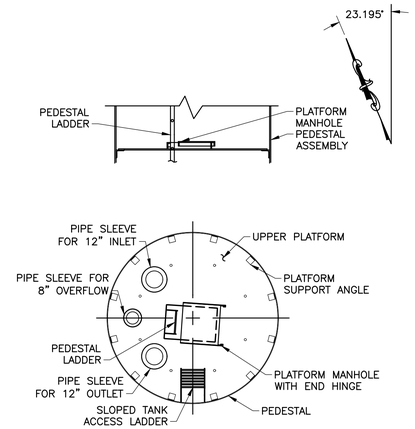

UPPER PLATFORM/PEDESTAL ORIENTATION

N.T.S.

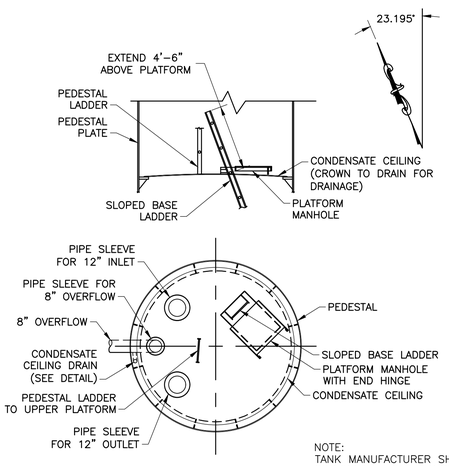

NOTE:
TANK MANUFACTURER SHALL COORDINATE FINAL LAYOUT DURING CONSTRUCTION

CONDENSATE CEILING ORIENTATION

N.T.S.

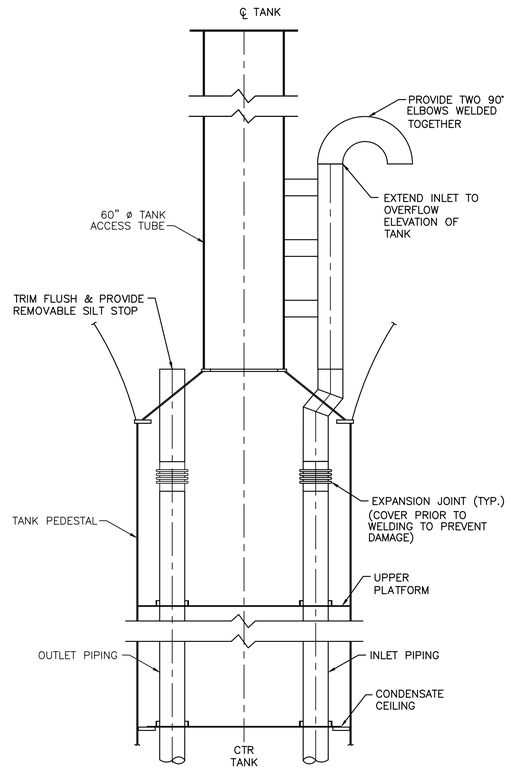

INLET/OUTLET PIPING DETAIL

N.T.S.

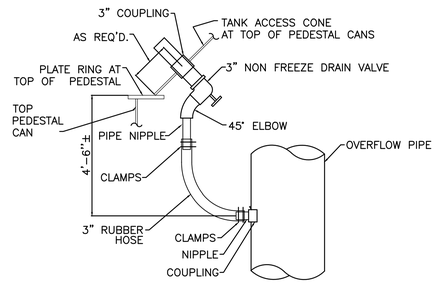

NOTES:
1) TEFLON TAPE TO BE USED FOR ALL THREADED CONNECTIONS.
2) PLUG SHALL REMAIN INSTALLED IN COUPLING UNTIL PAINTING OPERATIONS ARE COMPLETE.
3) CONTRACTOR SHALL INSTALL DRAIN & FITTINGS AS SHOWN AFTER PAINTING OPERATIONS ARE COMPLETE.
4) PROVIDE DRAIN VALVE IN AN ACCESSIBLE LOCATION.

TANK DRAIN ASSEMBLY

N.T.S.

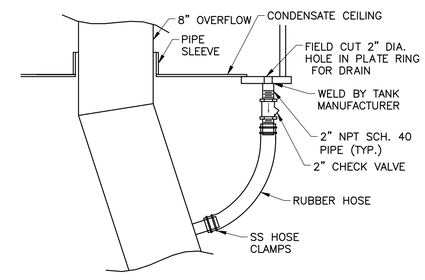

NOTES:
1) ALL PIPE AND FITTINGS SHALL BE 304 SS OR BRASS

CONDENSATE CEILING DRAIN

N.T.S.

Dewberry

Dewberry Engineers Inc.
4805 Lake Brook Drive, Suite 200
Glen Allen, Virginia 23060
PHONE: 804.290.7957
FAX: 804.290.7928
www.dewberry.com

ZION CROSSROADS
ELEVATED WATER STORAGE TANK

FLUVANNA COUNTY
DEPARTMENT OF PUBLIC WORKS

FLUVANNA COUNTY, VA

KEY PLAN

SEAL

COMMONWEALTH OF VIRGINIA
DANYLO A. VILLIHAUER
Lic. No. 046419
5/4/2018
PROFESSIONAL ENGINEER

SCALE

No.	DATE	BY	Description

REVISIONS

DRAWN BY	BMM / JEH
APPROVED BY	DAV
CHECKED BY	BMM
DATE	MAY 2018

TITLE

DETAILS

PROJECT NO. 50078862

M3.1

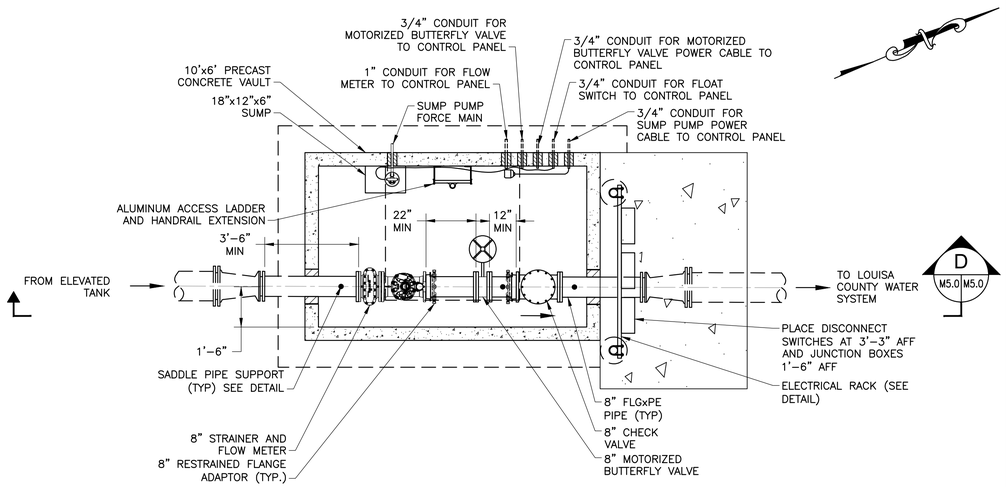

LOUISA EFFLUENT METER VAULT PLAN VIEW

SCALE: 3/8" = 1'-0"

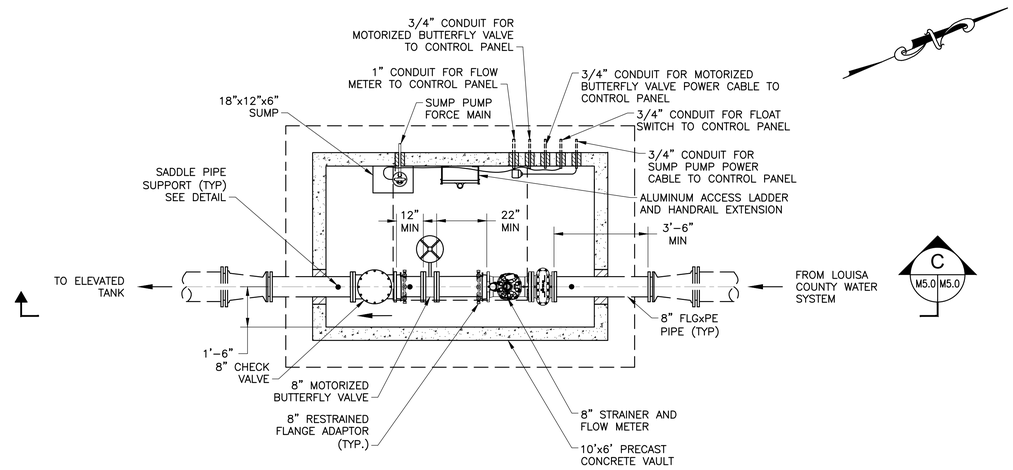

LOUISA INFLUENT METER VAULT PLAN VIEW

SCALE: 3/8" = 1'-0"

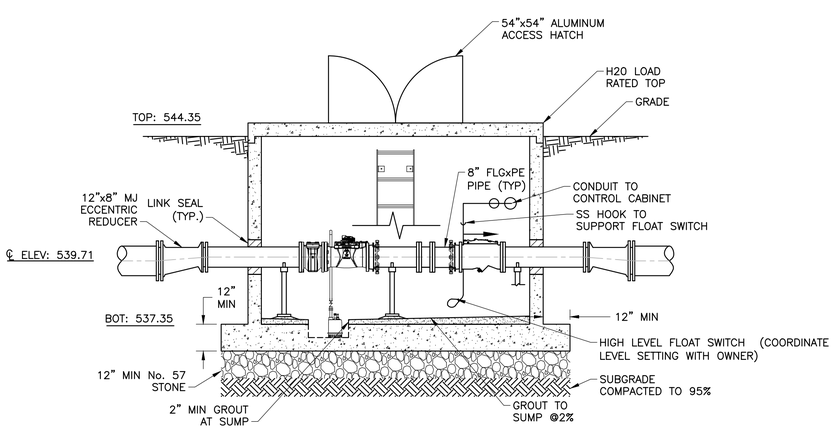

D M5.0 M5.0 LOUISA EFFLUENT METER VAULT SECTION

SCALE: 3/8" = 1'-0"

NOTE:
1. CONCRETE BASE SHALL BE MONOLITHICALLY POURED WITH VAULT WALLS

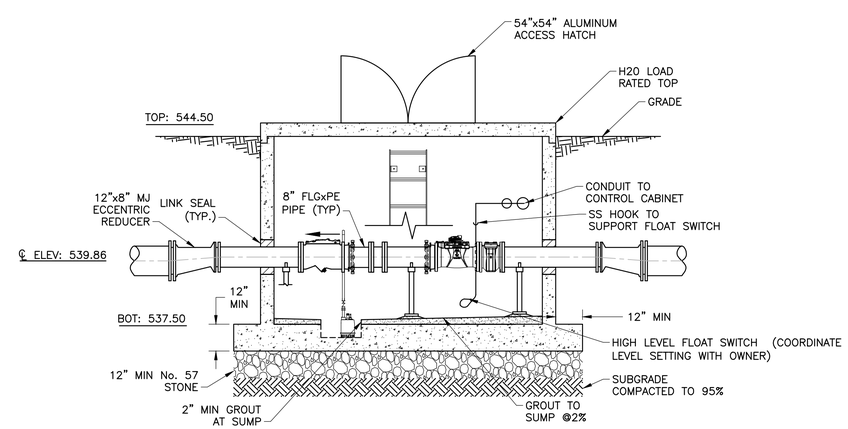

C M5.0 M5.0 LOUISA INFLUENT METER VAULT SECTION

SCALE: 3/8" = 1'-0"

NOTE:
1. CONCRETE BASE SHALL BE MONOLITHICALLY POURED WITH VAULT WALLS

Dewberry

Dewberry Engineers Inc.
4805 Lake Brook Drive, Suite 200
Glen Allen, Virginia 23060
PHONE: 804.290.7957
FAX: 804.290.7928
www.dewberry.com

ZION CROSSROADS
ELEVATED WATER STORAGE TANK

FLUVANNA COUNTY
DEPARTMENT OF PUBLIC WORKS

FLUVANNA COUNTY, VA

KEY PLAN

SEAL

COMMONWEALTH OF VIRGINIA
DANYLO A. VILLIHAUER
Lic. No. 046419
5/4/2018
PROFESSIONAL ENGINEER

SCALE

No.	DATE	BY	Description

REVISIONS

DRAWN BY	BMM / JEH
APPROVED BY	DAV
CHECKED BY	BMM
DATE	MAY 2018

TITLE

METER VAULT

PROJECT NO. 50078862

M4.0

GENERAL STRUCTURAL NOTES

GENERAL:

1. THE GENERAL STRUCTURAL NOTES ARE INTENDED TO AUGMENT THE DRAWINGS AND SPECIFICATIONS. SHOULD CONFLICTS EXIST BETWEEN THE DRAWINGS, SPECIFICATIONS, AND GENERAL STRUCTURAL NOTES, THE STRICTEST PROVISION SHALL GOVERN.
2. CONTRACTOR SHALL NOT SCALE DIMENSIONS FROM THE DRAWINGS.

DESIGN:

1. STRUCTURAL DESIGN OF GENERATOR SUPPORT PAD AND GENERATOR ACCESS PLATFORM CONFORMS TO THE REQUIREMENTS OF THE VIRGINIA UNIFORM STATEWIDE BUILDING CODE, 2012 EDITION (IBC 2012 WITH VIRGINIA AMENDMENTS).
2. BUILDING DESIGN LOADS AND DESIGN DATA FOR NEW CONSTRUCTION ARE AS FOLLOWS:

   A. FLOOR LIVE LOADS:

GENERATOR PAD	250 PSF
GENERATOR ACCESS PLATFORM	60 PSF

   B. WIND LOAD:

BASIC WIND SPEED (3 SECOND GUST)	120 MPH
BUILDING RISK CATEGORY	3
WIND EXPOSURE CATEGORY	B
INTERNAL PRESSURE COEFFICIENT	±0.18

   C. SEISMIC DESIGN DATA:

BUILDING RISK CATEGORY	3
SEISMIC IMPORTANCE FACTOR	1.25
MAPPED SPECTRAL RESPONSE ACCELERATIONS, S_S	0.224
MAPPED SPECTRAL RESPONSE ACCELERATIONS, S_1	0.069
SPECTRAL RESPONSE COEFF. S_{DS}	0.238
SPECTRAL RESPONSE COEFF. S_{D1}	0.110
SITE CLASS (ASSUMED)	D
SEISMIC DESIGN CATEGORY	B

COORDINATION:

1. STRUCTURAL DRAWINGS SHALL BE USED IN CONJUNCTION WITH, AND COORDINATED WITH CIVIL, MECHANICAL, ELECTRICAL, AND OTHER CONTRACT DOCUMENTS.
2. COORDINATE THE EXACT SIZE AND LOCATION OF ALL SLEEVES AND OPENINGS THROUGH CONCRETE SLABS, CONCRETE WALLS, AND MASONRY WALLS WITH CIVIL, MECHANICAL, AND ELECTRICAL DRAWINGS. SLEEVES SHALL BE ASTM A 53 SCHEDULE 40 STEEL WITH A DIAMETER NOT GREATER THAN 12 INCHES AND SHALL BE GALVANIZED AFTER CUTTING.

REINFORCED CONCRETE:

1. UNLESS NOTED OTHERWISE, ALL CONCRETE WORK, DETAILING, FABRICATION, AND PLACING OF REINFORCING AND CONCRETE SHALL BE GOVERNED BY THE LATEST REVISIONS OF:

   A. ACI 301, ACI 315, AND ACI 318.
   B. CRSI RECOMMENDED PRACTICE OF PLACING REINFORCING BARS.
   C. ACI 306 AND ACI 305 FOR COLD AND HOT WEATHER CONCRETING, RESPECTIVELY.

2. ALL CONCRETE SHALL BE NORMAL WEIGHT WITH A MAXIMUM UNIT WEIGHT OF 150 POUNDS PER CUBIC FOOT AND SHALL HAVE A MINIMUM 28 DAY COMPRESSIVE STRENGTH, AS SPECIFIED BELOW, FOR THE RESPECTIVE AREAS:

FOOTINGS	4,000 PSI
EXTERIOR PADS AND PAVEMENT	4,500 PSI

3. PROVIDE A 3/4" CHAMFER AT ALL EXPOSED CONCRETE CORNERS.
4. REINFORCING STEEL SHALL CONFORM TO ASTM A 615, AND SHALL BE GRADE 60 U.N.O.

FOUNDATIONS:

1. FOUNDATION DESIGN IS BASED ON A GEOTECHNICAL ENGINEERING REPORT PREPARED BY SCHNABEL ENGINEERING DATED FEBRUARY 23, 2017 (SCHNABEL PROJECT NUMBER 16C13175 TASK 4).
2. THE STRUCTURAL ENGINEER OF RECORD IS NOT RESPONSIBLE FOR SUBSURFACE CONDITIONS ENCOUNTERED IN THE FIELD CONTRARY TO THOSE ASSUMED FOR DESIGN.
3. FOUNDATION BEARING PRESSURE USED IN DESIGN (POUNDS PER SQUARE FOOT):

   COLUMN FOOTINGS 3,000 PSF

4. ALL COMPACTED FILL, EXCAVATIONS, AND SUBGRADES SHALL BE OBSERVED AND TESTED BY A GEOTECHNICAL ENGINEER REGISTERED IN THE COMMONWEALTH OF VIRGINIA (OR A QUALIFIED GEOTECHNICAL TECHNICIAN WORKING UNDER THE DIRECT SUPERVISION OF A REGISTERED ENGINEER) TO VERIFY SPECIFIED GEOTECHNICAL CONFORMANCE REQUIREMENTS. CONTRACTOR SHALL COORDINATE TESTING WITH OWNER AS DECLARED IN THE CONTRACT DOCUMENTS.
5. COMPACTED ENGINEERED FILL SHALL BE AS FOLLOWS:

   A. ON-SITE SOILS APPROVED BY THE PROJECT GEOTECHNICAL ENGINEER.
   B. OFF-SITE SOILS HAVING A CLASSIFICATION OF CL, ML, SC, SM, SP, SW, GC, GM, GP, OR GW PER ASTM D-2487 AND APPROVED BY THE PROJECT GEOTECHNICAL ENGINEER.
   C. PLACED IN LOOSE LIFTS NOT EXCEEDING 8 INCHES IN THICKNESS.
   D. COMPACTED TO AT LEAST 95 PERCENT OF MAXIMUM DRY DENSITY PER ASTM D-698.
   E. MOISTURE CONTENT ±3 PERCENT OF OPTIMUM.
   F. FREE OF BOULDERS, ORGANICS, TRASH, PARTICLES OF 3 INCHES OR MORE IN DIAMETER, AND OTHER DELETERIOUS MATERIALS.

6. CARE SHALL BE EXERCISED DURING EXCAVATION FOR FOUNDATIONS SO THAT AS LITTLE DISTURBANCE AS POSSIBLE OCCURS AT THE FOUNDATION LEVEL. LOOSE OR SOFT SOILS SHALL BE CAREFULLY CLEANED FROM THE BOTTOM OF THE EXCAVATIONS BEFORE PLACING CONCRETE. ACTUAL FOUNDATION SUBGRADES SHALL BE OBSERVED DURING CONSTRUCTION BY THE GEOTECHNICAL ENGINEER TO EVALUATE WHETHER SUITABILITY OF SUBGRADE SOILS.
7. UNLESS NOTED OTHERWISE, FOUNDATION SUBGRADES REQUIRING UNDERCUT SHALL BE FILLED FROM THE ELEVATION OF UNDERCUT TO THE ORIGINAL DESIGN SUBGRADE ELEVATION WITH LEAN CONCRETE, MINIMUM 500 PSI FLOWABLE FILL.
8. ANY SUBGRADE SOILS WHICH HAVE BEEN WEAKENED DUE TO SATURATION OR DISTURBANCE SHALL BE RECOMPACTED OR REMOVED AND REPLACED WITH STRUCTURAL FILL AS DIRECTED BY THE GEOTECHNICAL ENGINEER. CONCRETE STRUCTURES SHALL BE CONSTRUCTED IN AN EXPEDIENT MANNER ONCE EXCAVATIONS ARE MADE TO AVOID WEATHER DAMAGE.

WOOD FRAMING:

1. THE FOLLOWING SHALL APPLY FOR WOOD FRAMED CONSTRUCTION:

   A. ALL WOOD FRAMING SHALL BE SOUTHERN YELLOW PINE MINIMUM GRADE NUMBER 2, UNLESS NOTED OTHERWISE.
   B. WOOD MEMBERS SHALL HAVE MAXIMUM MOISTURE CONTENT OF 19 PERCENT.
   C. ALL PLYWOOD SHALL BE APA-RATED AS INDICATED ON DRAWINGS.
   D. ALL BOLTS USED FOR WOOD FASTENING SHALL CONFORM TO ASTM A307, LOW-CARBON STEEL WITH EXTERNALLY AND INTERNALLY THREADED FASTENERS, U.N.O.
   E. STEEL CONNECTOR PLATES SHALL CONFORM TO ASTM 36.
   F. LAG SCREWS SHALL CONFORM TO ANSI/ASME STANDARD B18.2.1
   G. NAILING SHALL BE IN ACCORDANCE WITH TABLE 2304.9.1 OF THE IBC 2012 CODE.
   H. WEATHER EXPOSED WOOD AND WOOD IN CONTACT WITH CONCRETE OR MASONRY SHALL BE PRESSURE TREATED.

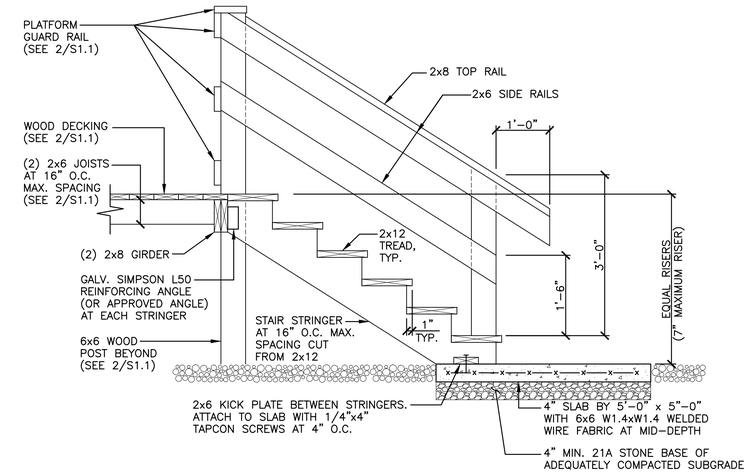

3 / S1.0 GENERATOR PLATFORM STAIR SECTION
SCALE: 3/4" = 1'-0"

GENERATOR ACCESS PLATFORM FRAMING PLAN NOTES

1. SEE S1.0 FOR GENERAL STRUCTURAL NOTES.
2. SEE SITE PLANS FOR LOCATION OF GENERATOR ON SITE.
3. STAIR LOCATION SHOWN IS SCHEMATIC. COORDINATE ACTUAL LOCATION WITH SITE PLAN.
4. ALL SAWN LUMBER SHALL BE PRESSURE TREATED, SOUTHERN PINE NO. 2 OR BETTER.
5. ALL FASTENERS AND POST BASES SHALL BE GALVANIZED OR STAINLESS STEEL.
6. - - - - - - - DENOTES (2) 2x6 X-BRACING BETWEEN POSTS. CONNECT BRACES TO POST FACE WITH (1) 5/8" DIA. THRU-BOLT.

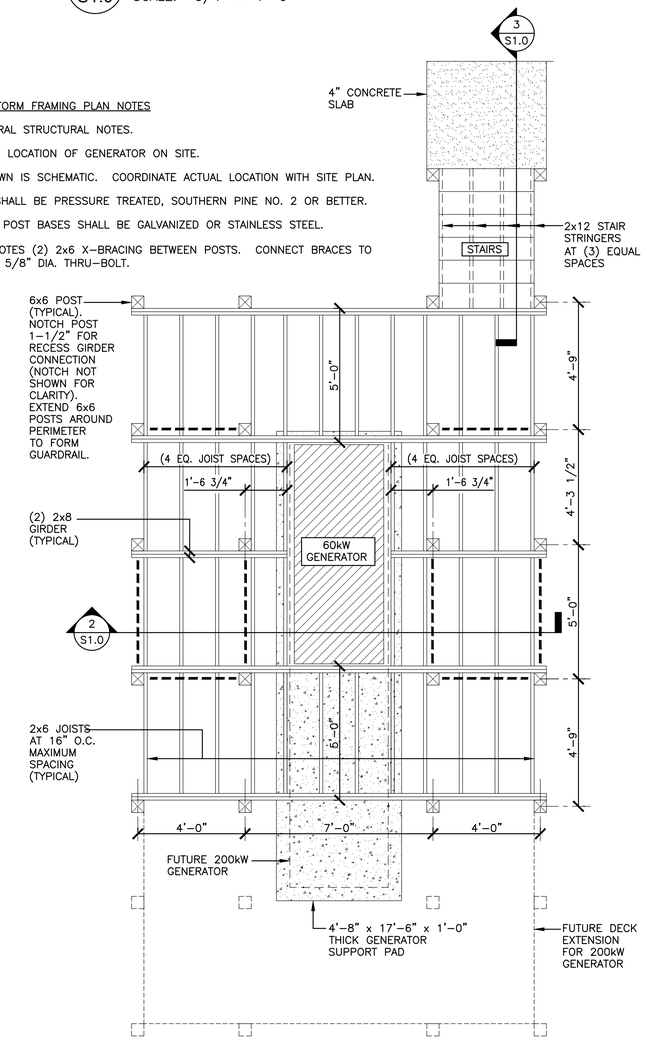

1 / S1.0 GENERATOR PLATFORM FRAMING PLAN
SCALE: 3/8" = 1'-0"

NOTES:

1. ALL FASTENERS, POST BASES, AND POST CAPS SHALL BE GALVANIZED OR STAINLESS STEEL.
2. ALL SAWN LUMBER SHALL BE PRESSURE TREATED.

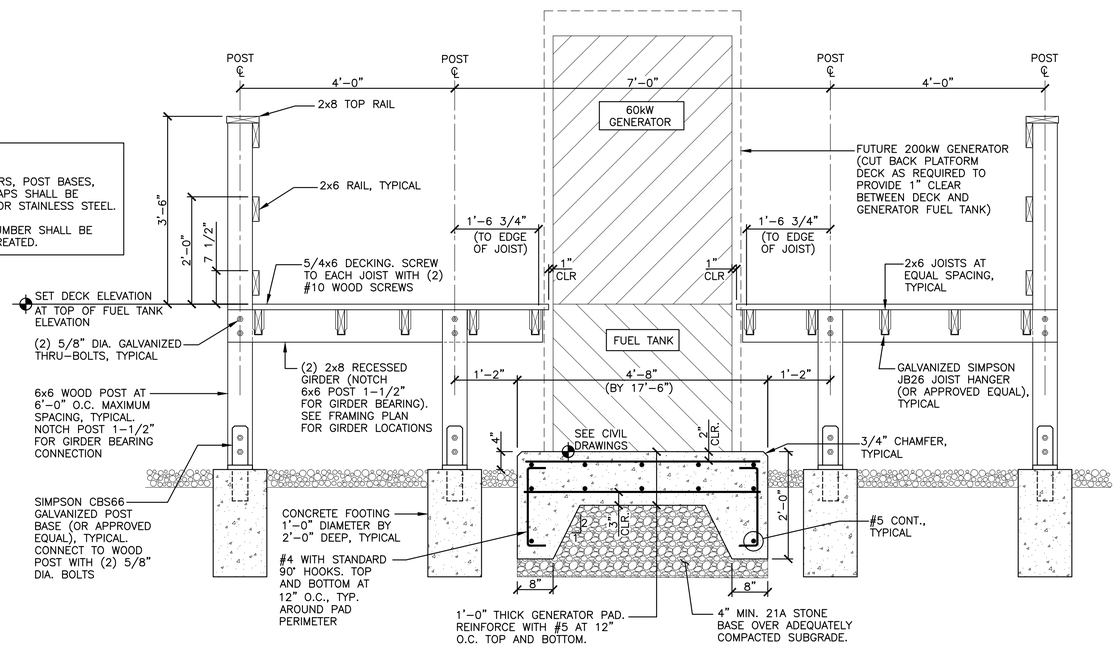

2 / S1.0 GENERATOR PAD AND PLATFORM SECTION
SCALE: 3/4" = 1'-0"

Dewberry
Dewberry Engineers Inc.
4805 Lake Brook Drive, Suite 200
Glen Allen, Virginia 23060
PHONE: 804.290.7957
FAX: 804.290.7928
www.dewberry.com

ZION CROSSROADS
ELEVATED WATER STORAGE TANK

FLUVANNA COUNTY
DEPARTMENT OF PUBLIC WORKS

FLUVANNA COUNTY, VA

KEY PLAN

SEAL
COMMONWEALTH OF VIRGINIA
JOSEPH ALLEN WOLHAR
Lic. No. 035964
5-4-2018
PROFESSIONAL ENGINEER

SCALE

No.	DATE	BY	Description

REVISIONS

DRAWN BY	STAFF
APPROVED BY	JAW
CHECKED BY	MKM
DATE	MAY 2018

TITLE
GENERATOR PAD AND PLATFORM DETAILS

PROJECT NO. 50078862

S1.0

BOS 2019-01-09 p.670/1491

Dewberry

Dewberry Engineers Inc.
4805 Lake Brook Drive, Suite 200
Glen Allen, Virginia 23060
PHONE: 804.290.7957
FAX: 804.290.7928
www.dewberry.com

ZION CROSSROADS ELEVATED WATER STORAGE TANK

FLUVANNA COUNTY
DEPARTMENT OF PUBLIC WORKS

FLUVANNA COUNTY, VA

KEY PLAN

SEAL

COMMONWEALTH OF VIRGINIA
DANYLO A. VILLHAUER
Lic. No. 046419
5/4/2018
PROFESSIONAL ENGINEER

SCALE

No.	DATE	BY	Description

REVISIONS

DRAWN BY	BMM / JEH
APPROVED BY	DAV
CHECKED BY	BMM
DATE	MAY 2018

TITLE

PROCESS AND INSTRUMENTATION DIAGRAM

PROJECT NO. 50078862

I1.0

ELEVATED WATER STORAGE TANK PLC

INSTRUMENT		P&ID	SIGNAL TYPE				
DESCR.	TYPE	element	DI	DO	AI	AO	NOTES
Tank Level	Pressure Transducer	3000			X		
Tank High Level	Pressure Switch	3001	X				
Tank Low Level	Pressure Switch	3002	X				
Motorized Butterfly Valve (Louisa Influent)	Lock Out Relay Switch	3020	X				
	Open Status	3021	X				
	Closed Status	3022	X				
	Open Command	3023		X			
	Close Command	3024		X			
Motorized Butterfly Valve (Louisa Effluent)	Lock Out Relay Switch	3120	X				
	Open Status	3121	X				
	Closed Status	3122	X				
	Open Command	3123		X			
	Close Command	3124		X			
LCWA Influent Flow	Turbine Meter	3030			X		
LCWA Effluent Flow	Turbine Meter	3130			X		
Meter Vault Level (Louisa Influent)	Float Switch	3400	X				
Meter Vault Level (Louisa Effluent)	Float Switch	3405	X				
Standby Generator	Run Status	3500	X				
	Fail Status	3501	X				
	Fuel Tank Low Level	3502	X				
	Fuel Tank Leak	3503	X				
ATS	Position	3510	X				
	Power Available	3511	X				
Tank Mixer	HOA Indicate	3600	X				
	Run/Stop Command	3601		X			
	Run/Stop Indicate	3602	X				
	Fault Alarm	3603	X				
Thermostat	Low Temperature Alarm	3700	X				

LEGEND
I - INDICATE
R - RECORD
M - Schematic/Map No.display screen of real time data
T - Trend graphics screens
H/L - High/Low

NOTE: THE OWNER'S SYSTEM INTEGRATOR SHALL FURNISH THE PUMP CONTROL PANEL FOR INSTALLATION BY THE CONTRACTOR. CONTRACTOR SHALL COORDINATE ALL WIRING TO/FROM THE CONTROL PANEL WITH THE OWNER'S SYSTEM INTEGRATOR. THE CONTRACTOR SHALL PROVIDE AND INSTALL ALL CONDUIT, WIRING, INSTRUMENTS, ETC. AS REQUIRED BY THE PLANS. THE OWNER'S SYSTEM INTEGRATOR SHALL BE RESPONSIBLE FOR TESTING THE PUMP CONTROL PANEL ONCE INSTALLED BY THE CONTRACTOR.

ABBRE□IATIONS

HP = HORSE POWER
M = MOTOR
P = PUMP
V = VALVE

LEGEND

MASTER PLC
LOCAL PLC OR REMOTE I/O
LOCAL DEVICE
REMOTE DEVICE
VARIABLE FREQUENCY DRIVE
EX. LOCAL DEVICE
TANK MIXER
GATE VALVE (NORMALLY OPEN)
GATE VALVE (NORMALLY CLOSED)
BUTTERFLY VALVE
MOTOR
ALTITUDE VALVE
SWING CHECK VALVE
BALL VALVE
CENTRIFUGAL PUMP
FLOW METER
REDUCER
STRAINER AND FLOW METER SAMPLE TAP
PRESSURE GAUGE
FLOAT SWITCH

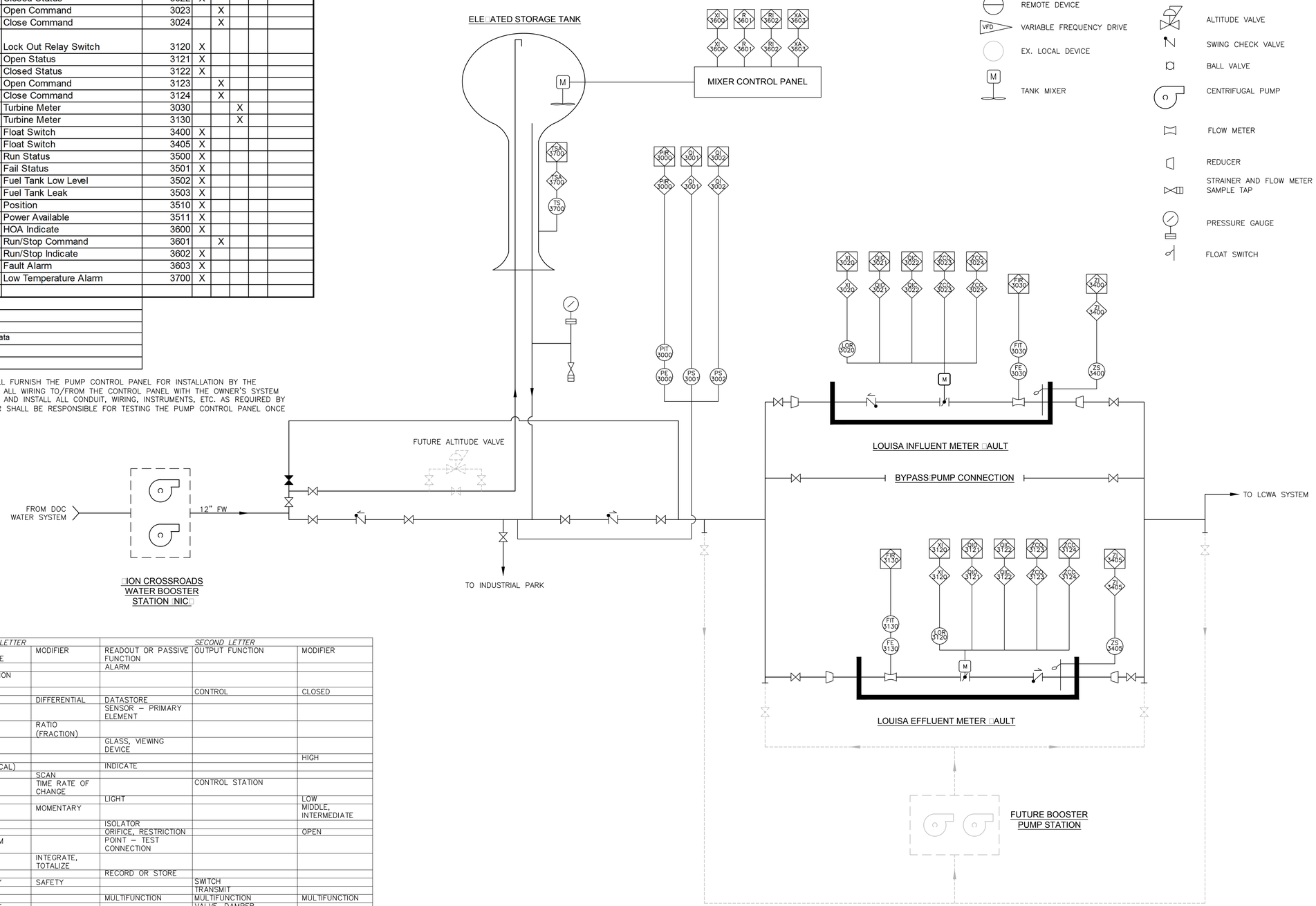

	FIRST LETTER		SECOND LETTER		
	MEASURED OR INITIATING VARIABLE	MODIFIER	READOUT OR PASSIVE FUNCTION	OUTPUT FUNCTION	MODIFIER
A	ANALYSIS		ALARM		
B	BURNER, COMBUSTION				
C				CONTROL	CLOSED
D	DENSITY	DIFFERENTIAL	DATASTORE		
E	VOLTAGE		SENSOR – PRIMARY ELEMENT		
F	FLOW RATE	RATIO (FRACTION)			
G			GLASS, VIEWING DEVICE		
H	HAND				HIGH
I	CURRENT (ELECTRICAL)		INDICATE		
J	POWER	SCAN			
K	TIME, TIME SCHEDULE	TIME RATE OF CHANGE		CONTROL STATION	
L	LEVEL		LIGHT		LOW
M	MOTOR	MOMENTARY			MIDDLE, INTERMEDIATE
N	TORQUE		ISOLATOR		
O			ORIFICE, RESTRICTION		OPEN
P	PRESSURE, VACUUM		POINT – TEST CONNECTION		
Q	EVENT OR STATUS	INTEGRATE, TOTALIZE			
R	RUN		RECORD OR STORE		
S	SPEED, FREQUENCY	SAFETY		SWITCH	
T	TEMPERATURE			TRANSMIT	
U	MULTIVARIBALE		MULTIFUNCTION	MULTIFUNCTION	MULTIFUNCTION
V	VIBRATION, VOLUME, MECHANICAL ANALYSIS			VALVE, DAMPER, LOUVER	
W	WEIGHT, FORCE		WELL		
X	FAILURE OR UNCLASSIFIED	X–AXIS		COMPUTE,	
Y		Y–AXIS		CONVERT, RELAY	
				DRIVER, ACTUATOR, FINAL	
Z	POSITION, DIMENSION	Z–AXIS		CONTROL ELEMENT	

PROCESS AND INSTRUMENTATION LEGEND

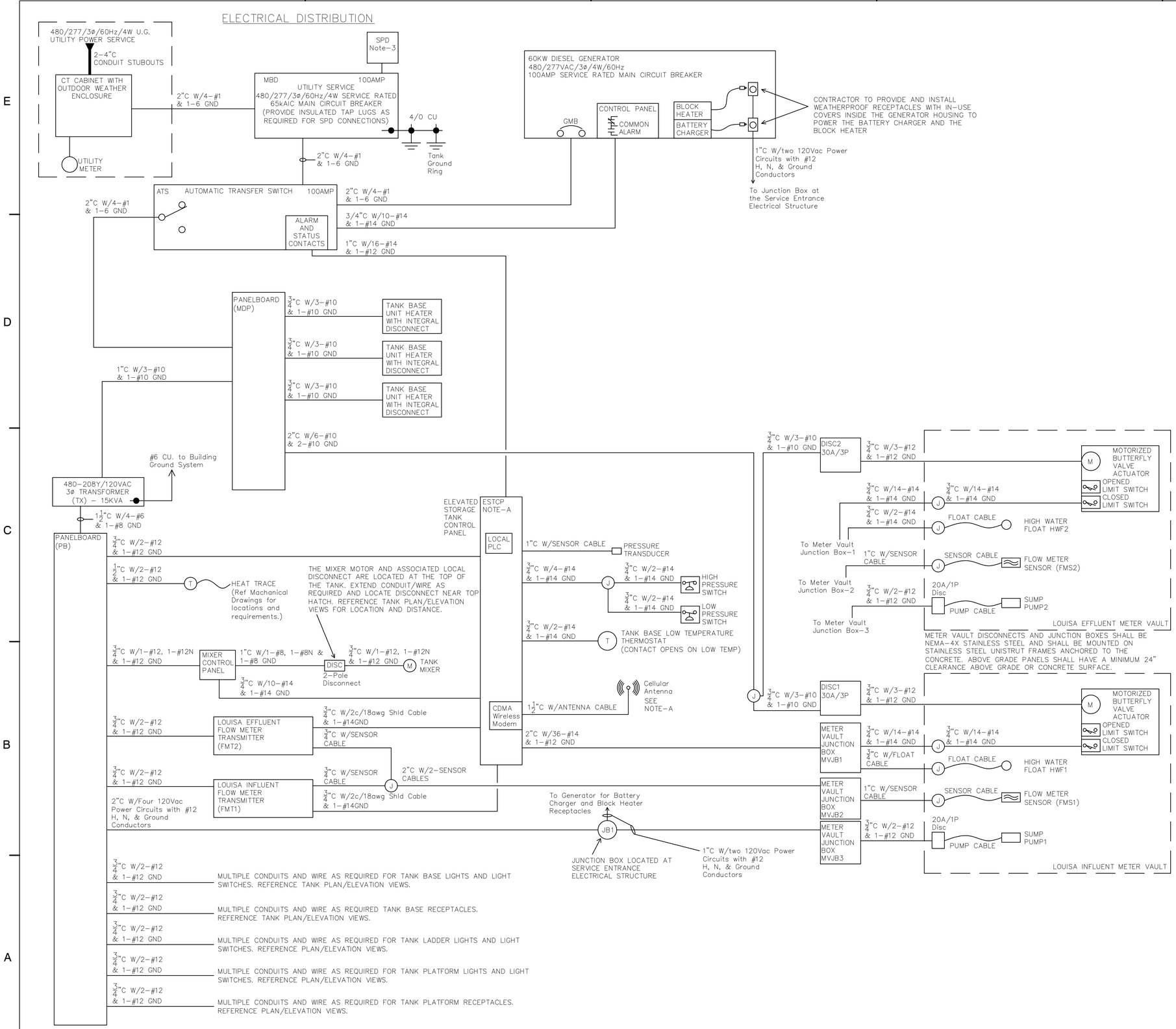

NOTE-A
PROVIDED BY OWNERS SYSTEMS INTEGRATOR FOR INSTALLATION BY THE CONTRACTOR. COORDINATE ALL WIRING TO/FROM THE CONTROL PANEL WITH THE OWNERS SYSTEMS INTEGRATOR.
NOTE-B
CONTRACTOR SHALL TERMINATE AND LOOP TEST ALL WIRING. COORDINATE WITH THE OWNERS SYSTEMS INTEGRATOR FOR INTEGRATING INTO THE COUNTY'S SCADA SYSTEM.

DOMINION CONTROL SYSTEMS, INC.
11080 L□d□□□□r R□d P.O. B□6301 □A□□□□d□□A 23005
PHONE□804□752-6323 FAX□804□752-6774

Dewberry
Dewberry Engineers Inc.
4805 Lake Brook Drive, Suite 200
Glen Allen, Virginia 23060
PHONE: 804.290.7957
FAX: 804.290.7928
www.dewberry.com

ZION CROSSROADS
ELEVATED WATER STORAGE TANK

FLUVANNA COUNTY
DEPARTMENT OF PUBLIC WORKS

FLUVANNA COUNTY, VA

KEY PLAN

SEAL
COMMONWEALTH OF VIRGINIA
D. L. Glasscock
Lic. No.036309
5/4/18
PROFESSIONAL ENGINEER

SCALE

No.	DATE	BY	Description

REVISIONS

DRAWN BY	DLG
APPROVED BY	DAV
CHECKED BY	DLG
DATE	MAY 2018

TITLE

EST ELECTRICAL DIAGRAMS

PROJECT NO. 50078862

E1.0

EST GENERAL ELECTRICAL NOTES:

1. THE CONTRACTOR SHALL PERFORM THE FOLLOWING FOR POWER SERVICE:
   - 1.1. COORDINATE WITH THE LOCAL POWER COMPANY AS REQUIRED FOR THE EXTENSION OF POWER TO THE SITE. INSTALL ALL UTILITY SUPPLIED EQUIPMENT PER THE UTILITY INSTALLATION INSTRUCTIONS AND REGULATIONS.
   - 1.2. COORDINATE WITH THE UTILITY TO ENSURE THAT PANEL MBD AND MDP HAVE AN AIC RATING WHICH EXCEEDS THAT WHICH IS DELIVERABLE TO THE SITE.
   - 1.3. PROVIDE BELOW GRADE CONDUIT STUBOUTS AND/OR EXTENSIONS TO THE UTILITY TRANSFORMER/POWER POLE AS REQUIRED BY THE UTILITY AND FOR USE BY THE UTILITY.
2. PROVIDE AND INSTALL BONDING BUSHINGS ON ALL SERVICE CONNECTIONS AND GROUNDING LOCKNUTS ON ALL PANEL CONNECTORS.
3. SURGE PROTECTION DEVICE (SPD):
   - 3.1. FOR PANEL MBD:
     - 3.1.1. PROVIDE AND INSTALL CURRENT TECHNOLOGY TransEnd 80 (OR EQUAL) UL 1449 3RD EDITION AND INSTALL PER THE MANUFACTURER'S INSTALLATION INSTRUCTIONS AND RECOMMENDATIONS.
   - 3.2. FOR PANELBOARDS MDP & PB
     - 3.2.1. PROVIDE AND INSTALL A UL LISTED SURGE ARRESTOR AS AN INTEGRAL COMPONENT TO EACH PANELBOARD. PROVIDE SHORT CIRCUIT PROTECTION IF REQUIRED.
4. ALL WIRE INSTALLED UNDER THIS CONTRACT SHALL BE COPPER.
5. ALL EQUIPMENT SHALL BE INSTALLED IN ACCORDANCE WITH LOCAL CODES AND REGULATIONS.
6. ALL EQUIPMENT SHALL BE PROVIDED WITH LAMICOID NAMEPLATES (3/16" LETTERING MIN.).
7. ALL PANELBOARD SCHEDULES SHALL REFLECT AS-BUILT CONDITIONS.
8. REFERENCE THE CIVIL SITE PLAN FOR ALL EQUIPMENT LOCATIONS AND DISTANCES.
9. REFERENCE CIVIL/MECHANICAL DRAWINGS FOR EQUIPMENT AND SENSOR MOUNTING DETAILS AND WET WELL CONDUIT INSTALLATION DETAILS.
10. CONDUIT NOTES:
    - 10.1. DUCT BANKS SHALL UTILIZE PVC SCHEDULE-40 CONDUIT
    - 10.2. PVC COATED RIGID STEEL CONDUIT AND ACCESSORIES SHALL BE USED FOR THE FOLLOWING:
      - 10.2.1. SINGLE UNDERGROUND CONDUIT RUNS @24" BELOW GRADE WITH RED VINYL WARNING TAPE AT 6" ABOVE THE CONDUIT.
      - 10.2.2. ALL CONDUIT EXTENDING TO/FROM THE TANK AND THE VALVE VAULTS AND GENERATOR.
      - 10.2.3. PROVIDE PVC REPAIR WITH MANUFACTURERS TOUCH-UP KIT WHERE REQUIRED.
    - 10.3. GALVANIZED RIGID STEEL CONDUIT SHALL BE USED FOR ALL INTERIOR CONDUIT AND ABOVE GRADE EXTERIOR CONDUIT. STUBUPS SHALL BE MINIMUM 12" ABOVE GRADE AND OR FINISHED FLOOR.
    - 10.4. CONDUIT EXTENDED TO EQUIPMENT THAT IS LOCATED MORE THAN 2FT FROM AN ADJACENT WALL SHALL BE EXTENDED IN THE SLAB WITH THE STUBUP LOCATED ADJACENT TO AND COORDINATED WITH THE EQUIPMENT.
    - 10.5. CONDUIT REQUIRED FOR FUTURE EQUIPMENT SHALL BE PROVIDED AND INSTALLED. EACH CONDUIT SHALL BE EXTENDED TO A POINT ADJACENT TO THE EQUIPMENT. INTERIOR CONDUIT STUBUPS SHALL BE A THREADED COUPLING SET FLUSH IN THE FLOOR, CAPPED AND SEALED WITH A PULL CORD INSTALLED FOR FUTURE USE. EXTERIOR CONDUIT STUBUPS SHALL BE A THREADED COUPLING 6" ABOVE GRADE AND/OR CONCRETE PAD, CAPPED AND SEALED WITH A PULL CORD INSTALLED FOR FUTURE USE.
11. LIGHTS AND RECEPTACLES - REFERENCE THE TANK LIGHTING NOTES AND PLAN/ELEVATION VIEWS TO DETERMINE THE LOCATIONS AND QUANTITIES OF LIGHTS AND RECEPTACLES. ALL RECEPTACLES SHALL BE DUPLEX 20AMP GFCI TYPE WITH WEATHERPROOF IN-USE COVERS THAT FULLY CLOSE WHILE IN USE. THE GROUNDING CONDUCTOR SHALL BE CONNECTED TO ALL RECEPTACLES SUCH THAT THE REMOVAL OF ANY RECEPTACLE WILL NOT INTERRUPT THE CONTINUITY TO OTHER RECEPTACLES.
12. ALL ENCLOSURES SHALL BE AS FOLLOWS UNLESS SPECIFICALLY NOTED OTHERWISE:
    - 12.1. UL LISTED FOR THE INTENDED PURPOSE. THIS INCLUDES UL508A FOR "ENCLOSED INDUSTRIAL CONTROL PANELS".
    - 12.2. ALL ENCLOSURES SHALL BE NEMA-4X STAINLESS STEEL.
    - 12.3. ALL ENCLOSURES SHALL BE PROVIDED WITH AMBIENT COMPENSATION AS REQUIRED BY THE INSTALLED EQUIPMENT. (ie. AIR CONDITIONER, HEATER, COOLING FANS, ETC.
    - 12.4. ALL ENCLOSURES SHALL BE PAD LOCKABLE.
13. MISCELLANEOUS JUNCTION BOXES:
    - 13.1. ALL WIRING INSIDE SHALL TERMINATE ON DIN RAIL MOUNTED FINGER-SAFE TERMINALS WITH PROPER RATINGS AND MARKED WITH THE TERMINAL MANUFACTURER'S TAGGING SYSTEM. PROVIDE PANDUIT WIREWAY, OR EQUAL, FOR THE ROUTING OF ALL WIRE AND CABLE INSIDE THE BOX. TERMINALS AND WIRING SHALL BE SEPARATED BY TYPE. (ie. INTRISICALLY SAFE, CONTROL, SIGNAL). MAINTAIN PROPER SEPARATION BETWEEN INTRINSICALLY SAFE AND NON-INTRINSICALLY SAFE CIRCUITS PER UL AND NEC.
    - 13.2. SPLIT BOLTS, WIRENUTS, BUTT-SPLICES AND THE LIKE ARE NOT ACCEPTABLE.
    - 13.3. THE ENCLOSURE SIZE SHALL BE (16"X16"X6" HxWxD MIN.). CONTRACTOR SHALL INCREASE THE SIZE OF EACH JUNCTION BOX AS REQUIRED PER NEC.
14. GROUND RING:
    - 14.1. EXTEND 4/0 COPPER FROM MBD TO TANK GROUND RING. PROVIDE AND INSTALL A 4/0 GROUND RING W/A GROUND ROD AT EACH QUADRANT OF THE TANK.
    - 14.2. EXTEND GROUND CONDUCTOR TO TANK OUTSIDE WALL AND CONNECT ON WELDED THREADED STUD. COORDINATE INSTALLATION AND LOCATION OF STUD WITH TANK MANUFACTURER FOR GROUND RING CONNECTIONS.
    - 14.3. GROUND RING CONDUCTOR SHALL BE 30" BELOW GRADE.
    - 14.4. REFERENCE GROUNDING SPECIFICATIONS FOR ADDITIONAL REQUIREMENTS.
    - 14.5. EACH GROUND ROD SHALL BE 3/4"DIA X 10FT COPPER CLAD WITH THE TOP LOCATED 24" BELOW GRADE (MIN).
    - 14.6. ALL CONNECTIONS TO GROUND RODS SHALL BE BARE COPPER CAD WELDED.
    - 14.7. PROVIDE AN ENCLOSED WATER TIGHT EXTERIOR GROUND TEST POINT ENCLOSURE WITH ACCESS FROM GRADE LEVEL AT ONE QUADRANT OF THE TANK.
    - 14.8. PROVIDE AND INSTALL A CONCRETE ENCASED ELECTRODE PER NEC 250.52(A)(3).
    - 14.9. EXTEND A BELOW GRADE BARE COPPER CONDUCTOR (2/0 min.) TO EACH METAL RAILING, FENCE, EQUIPMENT STRUCTURE/CONCRETE PAD, SUPPORT STRUCTURE AND POURED CONCRETE REBAR REINFORCING SYSTEM.

ELECTRICAL LEGEND

ALL SYMBOLS MAY NOT BE USED ON THIS CONTRACT

- +44" S — WALL MOUNTED TOGGLE SWITCH DIMENSION IS HEIGHT ABOVE FINISHED FLOOR
- S3 — WALL MOUNTED TOGGLE SWITCH NO. INDICATES 3-WAY, 4-WAY, ETC.
- RECEPTACLE
- CONDUIT RUN
- INDICATES NO. OF WIRES (1-HOT,1-NEUTRAL & 1-GROUND)
- INDICATES A CONDUIT "HOMERUN" TO A DESIGNATED PANEL. NOT INTENDED TO BE ALL INCLUSIVE, REFERENCE THE POWER DISTRIBUTION DIAGRAM FOR CONDUIT/WIRE DETAILS
- PAD-LOCKABLE DISCONNECT SWITCH
- CMS — PAD-LOCKABLE COMBINATION MOTOR STARTER W/OVERLOADS & PHASE MONITORING RELAY
- GROUND ROD
- GROUND ROD FOR GROUND RING

ABBREVIATIONS

(A Number Designates the Unit where applicable)

ATS	- AUTOMATIC TRANSFER SWITCH
CB	- CIRCUIT BREAKER
CW	- COLD WATER PIPING SYSTEM
DISC	- MACHINE LOCAL DISCONNECT SWITCH
DS	- DOOR SWITCH
EST	- ELEVATED STORAGE TANK
ESTCP	- ELEVATED STORAGE TANK CONTROL PANEL
FMS	- FLOW METER SENSOR
FMT	- FLOW METER TRANSMITTER
GMB	- GENERATOR MAIN BREAKER
J	- JUNCTION BOX
S	- LIGHT SWITCH
MANUF	- MANUFACTURER
MB	- UTILITY METERBASE/CT CABINET
MBD	- SERVICE ENTRANCE MAIN BREAKER DISCONNECT
MDP	- MAIN DISTRIBUTION PANELBOARD
P	- PUMP
PB	- DISTRIBUTION PANELBOARD
R	- RECEPTACLE
SPD	- SURGE PROTECTION DEVICE
T	- THERMOSTAT
TJB	- TANK JUNCTION BOX
TX	- TRANSFORMER
UG	- UNDER GROUND
UH	- UNIT HEATER
WP	- WEATHERPROOF

PANELBOARD: MDP, SERVICE RATED, (65kAIC)
MOUNTING: SURFACE
ENCLOSURE: NEMA-4X, 30CKT (min)

MAIN BUSS: 200AMP, COPPER
VOLTAGE: 480Y/277VAC,3ø,4W,60Hz
INTERIOR: 150AMP/65kAIC MAIN BREAKER

LOAD DESCRIPTION	CB SIZE	# POLE	CKT NO	AMPS/PHASE øA	AMPS/PHASE øB	AMPS/PHASE øC	CKT NO	# POLE	CB SIZE	LOAD DESCRIPTION
FLUVANNA MOTORIZED BUTTERLFY VALVE ACTUATOR	20	3	1	2			2	3	20	UNIT HEATER UH1 (10KW)
			3	14	2		4			
			5		14	2	6			
LOUISA MOTORIZED BUTTERLFY VALVE ACTUATOR	20	3	7	2			8	3	20	UNIT HEATER UH2 (10KW)
			9	14	2		10			
			11		14	2	12			
480-208Y/120Vac 3-PHASE TRANSFORMER TX1 (15kVA)	50	3	13	18			14	3	20	UNIT HEATER UH3 (10KW)
			15	14	18		16			
			17		14	18	18			
PREPARED SPACE	--	3	19	--			20	3	--	PREPARED SPACE
			21	--	--		22			
			23			--	24			
PREPARED SPACE	--	3	25	--			26	3	**	SURGE PROTECTION DEVICE INTEGRAL TO PANELBOARD. ** - COORDINATE CIRCUIT BREAKER SELECTION WITH SPD MANUFACTURER.
			27	--	--		28			
			29			--	30			
				64	64	64	TOTAL AMPS			

PANELBOARD: PB, SERVICE RATED (22kAIC)
MOUNTING: SURFACE
ENCLOSURE: NEMA-4X, 30CKT (18 SHOWN)

MAIN BUSS: 100AMP, COPPER
VOLTAGE: 208Y/120VAC,3ø,4W,60Hz
INTERIOR: 60AMP/22kAIC MAIN BREAKER

LOAD DESCRIPTION	CB SIZE	# POLE	CKT NO	AMPS/PHASE øA	AMPS/PHASE øB	AMPS/PHASE øC	CKT NO	# POLE	CB SIZE	LOAD DESCRIPTION
TANK BASE LIGHTING	20	1	1	5			2	1	20 GFI	TANK BASE RECEPTACLES
TANK LADDER PLATFORM LIGHTS	20	1	3		5		4	1	20 GFI	TANK LADDER PLATFORM RECEPTACLES
TANK LADDER LIGHTS	20	1	5			5	6	1	20	CONTROL ROOM RECEPTACLES
FLOWMETER TRANSMITTER FMT2	20	1	7	5			8	1	15	FLOWMETER TRANSMITTER FMT1
SUMP PUMP1	20	1	9		6		10	1	20	GENERATOR BATTERY CHARGER
SUMP PUMP2	20	1	11			6	12	1	20	GENERATOR BLOCK HEATER
EST CONTROL PANEL ESTCP	15	1	13	10			14	3	**	SURGE PROTECTION DEVICE INTEGRAL TO PANELBOARD. ** - COORDINATE CIRCUIT BREAKER SELECTION WITH SPD MANUFACTURER.
MIXER CONTROL PANEL	20	1	15		6		16			
HEAT TRACE	20	1	17			5	18			
				30	29	31	TOTAL AMPS			

EST LIGHTING FIXTURE SCHEDULE:

LIGHTING FIXTURE SCHEDULE
FIXTURES SHALL BE PER THE SCHEDULE OR APPROVED EQUAL

TYPE	MANUF.	CAT. NUMBER	FIXTURE LAMPS MOUNTING	TYPE	VOLTS
B	MAXLITE	MLSWP20WLED50DSPC12 SMALL WALLPACK	SURFACE	LED	120VAC
G	LITHONIA	OLVT SERIES LED LIGHTS CONTROLLED BY SWITCH	SURFACE	LED	120VAC
EX	PHILIPS	ER55LDT212/27WRTP	SURFACE	LED	120VAC

DOMINION CONTROL SYSTEMS, INC.
11080 L□□d□□□□r R□□d □P.O. B□□6301 □A□□□□d □□A 23005
PHONE□804□752-6323 FAX□804□752-6774

Dewberry
Dewberry Engineers Inc.
4805 Lake Brook Drive, Suite 200
Glen Allen, Virginia 23060
PHONE: 804.290.7957
FAX: 804.290.7928
www.dewberry.com

ZION CROSSROADS
ELEVATED WATER STORAGE TANK

FLUVANNA COUNTY
DEPARTMENT OF PUBLIC WORKS

FLUVANNA COUNTY, VA

KEY PLAN

SEAL

COMMONWEALTH OF VIRGINIA
D. L. Glasscock
Lic. No.036309
5/4/18
PROFESSIONAL ENGINEER

SCALE

No.	DATE	BY	Description

REVISIONS

DRAWN BY	DLG
APPROVED BY	DAV
CHECKED BY	DLG
DATE	MAY 2018

TITLE

EST ELECTRICAL SCHEDULES AND NOTES

PROJECT NO. 50078862

E1.1

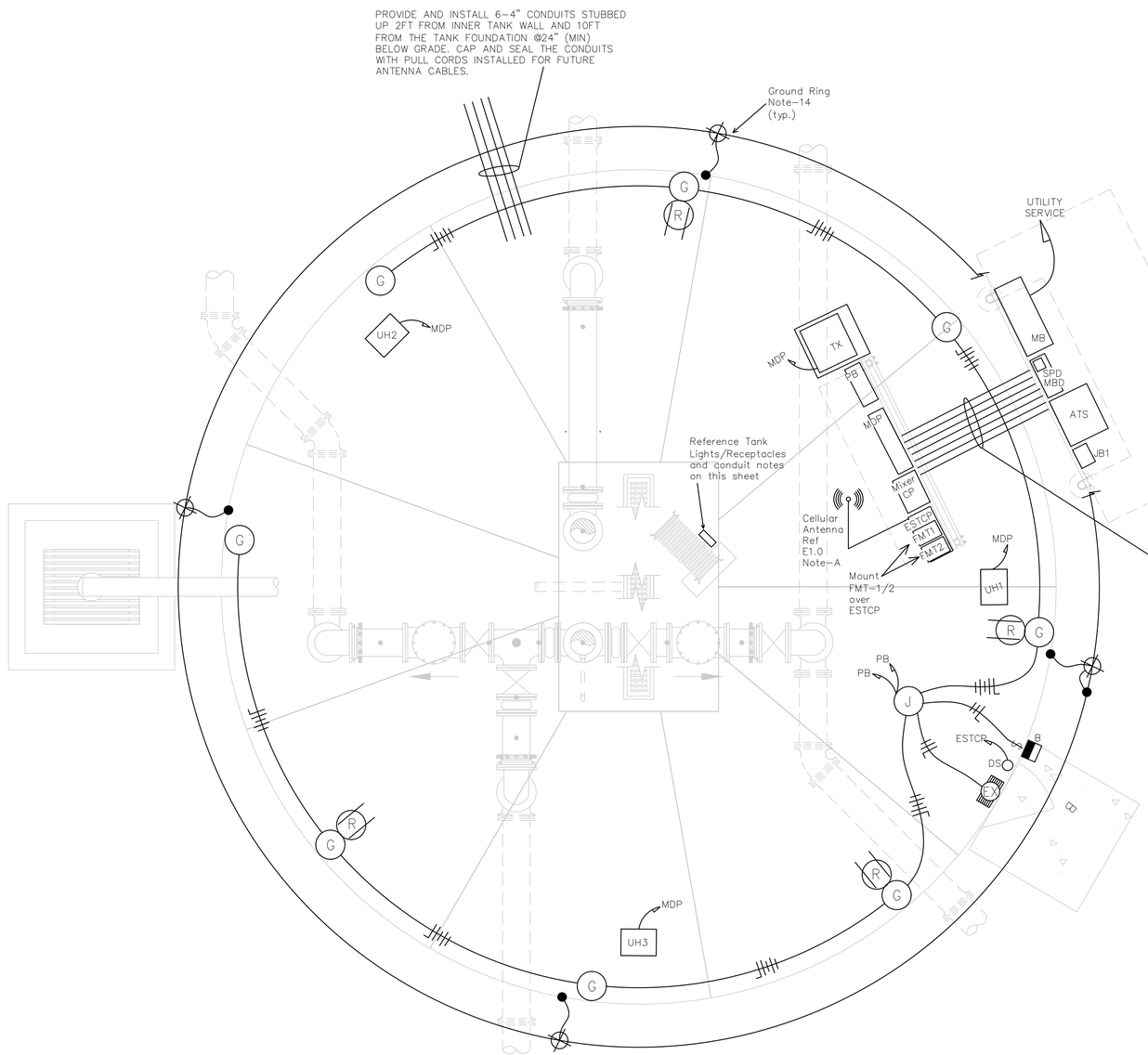

Note:
Generator & Meter Vault sizes and location are Not-to-Scale, Ref Site Plan for locations and Distances

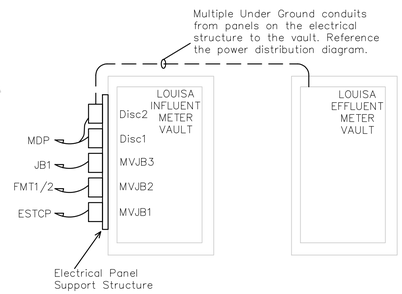

Provide and Install 7-2" direct buried PVC Coated Rigid Steel conduits, Extend conduits underground as required from inside the tank to their respective destinations and associated panels.
Conduits shall be as follows:

C-1	480Vac Power from ATS to MDP
C-2	480Vac Power from MDP to the Flow Meter Vaults Motorized Valves.
C-3	120Vac Power from PB to the generator receptacles and the sump pumps in the Flow Meter Vaults via Junction Box JB1.
C-4	Discrete Signals from the Flow Meter Vault Junction Box-3 to ESTCP.
C-5	Discrete Signals from ATS to ESTCP.
C-6	Spare Conduit
C-7	Spare Conduit

Spare Conduits shall stub up at each Electrical Structure. Cap and Seal with a pull cord for future use.

LIGHT NOTES AND SKETCHES
Not To Scale
Reference Note-11
Light Fixture G shall be Lithonia OLVT Series LED Lights (or equal) controlled by light switches.

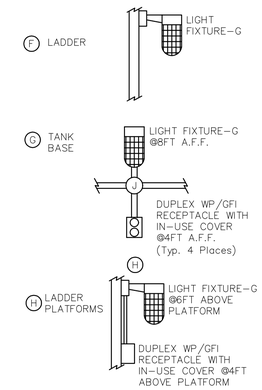

PROVIDE AND INSTALL THE FOLLOWING FOR THE ELEVATED STORAGE TANK:

1. FIVE-$\frac{3}{4}$"CONDUITS EXTENDING UP THE INSIDE OF THE TANK FROM THE BASE OF THE TANK TO THE TOP ACCESS HATCH WITH IT'S AND JUNCTION BOXES AS REQUIRED FOR THE ASSOCIATED LIGHTS AND RECEPTACLES. PROVIDE A JUNCTION BOX AND LIGHT SWITCH AT EACH PLATFORM AND AT THE ACCESS HATCH. EACH WITH HINGED DOORS AND FULLY ACCESSIBLE FOR MAINTENANCE AND ACCESS OF ALL ASSOCIATED WIRING. PROVIDE A LIGHT SWITCH AT THE BASE OF THE LADDER TO TURN ON THE LADDER LIGHTS.
2. ONE-$\frac{3}{4}$" CONDUIT EXTENDING TO THE TOP OF THE TANK FOR THE TANK MIXER DISCONNECT AND MOTOR.
3. LIGHT FIXTURES AS SHOWN WITH THE QUANTITY OF "G" FIXTURES AS REQUIRED TO NOT EXCEED 10FT SPACING BETWEEN FIXTURES ALONG EACH LADDER.
4. ONE DUPLEX WP/GFI RECEPTACLE AT EACH STAIR LANDING AND ONE LOCATED NEAR THE TOP OF THE TANK APPROXIMATELY 1FT BELOW THE TOP ACCESS HATCH THAT IS ACCESSIBLE FROM THE LADDER.
5. REFERENCE THE TANK ELEVATION DRAWING TO DETERMINE LIGHTING LOCATIONS AND DISTANCES.

Dewberry
Dewberry Engineers Inc.
4805 Lake Brook Drive, Suite 200
Glen Allen, Virginia 23060
PHONE: 804.290.7957
FAX: 804.290.7928
www.dewberry.com

ZION CROSSROADS
ELEVATED WATER STORAGE TANK

FLUVANNA COUNTY
DEPARTMENT OF PUBLIC WORKS

FLUVANNA COUNTY, VA.

KEY PLAN

SEAL
COMMONWEALTH OF VIRGINIA
D. L. Glasscock
Lic. No.036309
5/4/18
PROFESSIONAL ENGINEER

SCALE

No.	DATE	BY	Description

REVISIONS

DRAWN BY	DLG
APPROVED BY	DAV
CHECKED BY	DLG
DATE	MAY 2018

TITLE
EST
ELECTRICAL
VIEWS AND
NOTES

PROJECT NO. 50078862

E1.2

DOMINION CONTROL SYSTEMS, INC.
11080 L□□d□□□□r R□□d □P.O. B□□ 6301 □A□□□d□□ A 23005
PHONE□□804□752-6323 FAX□□804□752-6774

Exhibit J

SCHEDULE OF VALUES

FLUVANNA COUNTY - Public Works Department
Dewberry Engineers, Inc.

CB&I # 212351

	Description		
500 MG WSD Elevated Storage Tank Project			
1	Contract Insurance Bonds		$55,000
2	Tank/Foundation Engineering		$115,000
3	Tank Foundation		$248,100
	Mobilization / Site Prep	$70,000	
	Foundation - Tank	$88,100	
	Floor Slab / Interior Piping	$90,000	
4	Tank Erection		$905,900
	Deliver Fabricated Materials (140 Tons)	$557,000	
	Tank Erection	$348,900	
5	Tank Paint		$125,000
6	Electrical / Instrumentation		$229,500
	Electrical - Tank	$88,500	
	Cathodic Protection System - Tank	$13,000	
	Electrical Site / Generator	$128,000	
7	Yard Piping / Meter Vaults / Generator Pad		$215,000
8	Finish Grade / Seed / Stone / Misc Pads		$60,000
9	Fence / Gate / Mow Strip		$35,000
10	Hydrotest Tank		$2,500
TOTAL CONTRACT AMOUNT			$1,991,000

NOTE: The above values are for invoicing purposes only. They are not valid for use in determining values for change orders.

Monthly Cash Flow
CBI Ref # 212351
Dewberry Engineers, Inc.
Fluvanna County Department of Public Works
Palmyra, Fluvanna Co., VA

	Month Year	February 2019	March 2019	April 2019	May 2019	June 2019	July 2019	August 2019	September 2019	October 2019	November 2019	December 2019	January 2020	February 2020	March 2020	Total
500 MG WSD Elevated Storage Tank Project																
1 Contract Insurance Bonds	$55,000	$55,000														$55,000
2 Tank/Foundation Engineering	$115,000	$23,000	$57,500	$34,500												$115,000
3 Tank Foundation																
Mobilization / Site Prep	$70,000			$70,000												$70,000
Foundation - Tank	$88,100				$88,100											$88,100
Floor Slab / Interior Piping	$90,000					$90,000										$90,000
4 Tank Erection																
Deliver Fabricated Materials (140 Tons)	$557,000						$222,800	$334,200								$557,000
Tank Erection	$348,900						$122,115	$174,450	$52,335							$348,900
5 Tank Paint	$125,000								$43,750	$50,000	$31,250					$125,000
6 Electrical / Instrumentation																
Electrical - Tank	$88,500										$88,500					$88,500
Cathodic Protection System - Tank	$13,000											$13,000				$13,000
Electrical Site / Generator	$128,000											$64,000	$64,000			$128,000
7 Yard Piping / Meter Vaults / Generator Pad	$215,000										$107,500	$107,500				$215,000
8 Finish Grade / Seed / Stone / Misc Pads	$60,000											$24,000	$36,000			$60,000
9 Fence / Gate / Mow Strip	$35,000												$24,500	$10,500		$35,000
10 Hydrotest Tank	$2,500											$2,500				$2,500
Subtotals	$1,991,000	$78,000	$57,500	$104,500	$88,100	$90,000	$344,915	$508,650	$96,085	$50,000	$227,250	$211,000	$124,500	$10,500	$0	**$1,991,000**
Accumalative Total		$78,000	$135,500	$240,000	$328,100	$418,100	$763,015	$1,271,665	$1,367,750	$1,417,750	$1,645,000	$1,856,000	$1,980,500	$1,991,000	$1,991,000	

PALMYRA, VA

CB&I Contract # 212351
PRELIMINARY PLAN

COUNTY OF FLUVANNA
500MG WATERSPHEROID

ID	Task Name	Duration	Start	Finish
1	PRECONSTRUCTION MEETING	0 days	Wed 2/6/19	Wed 2/6/19
2	NOTICE TO PROCEED	0 days	Mon 2/18/19	Mon 2/18/19
3	FOUNDATION DESIGN	2 wks	Mon 2/4/19	Fri 2/15/19
4	FOUNDATION DRAWINGS	3 wks	Mon 2/18/19	Fri 3/8/19
5	FOUND. DWGS. Customer Review	2 wks	Mon 3/11/19	Fri 3/22/19
6	TANK DESIGN	2 wks	Mon 2/4/19	Fri 2/15/19
7	TANK DRAWINGS	3 wks	Mon 3/4/19	Fri 3/22/19
8	TANK DWGS. Customer Review	2 wks	Mon 3/25/19	Fri 4/5/19
9	FOUND. MAT'L SUBMITTALS	3 wks	Mon 3/11/19	Fri 3/29/19
10	FOUND. MAT'L Customer Review	2 wks	Mon 4/1/19	Fri 4/12/19
11	ELECTRICAL MAT'L SUBMITTALS	3 wks	Mon 4/1/19	Fri 4/19/19
12	ELECTRICAL MAT'L Customer Review	2 wks	Mon 4/22/19	Fri 5/3/19
13	TANK MATERIAL	12 wks	Mon 2/4/19	Fri 4/26/19
14	FABRICATION - TANK	11 wks	Mon 4/29/19	Fri 7/12/19
15	SHIP - TANK	6 wks	Mon 7/1/19	Fri 8/9/19
16	TANK FOUNDATION CONSTRUCTION	35 days	Mon 4/15/19	Fri 5/31/19
17	MOBILIZATION & SITE PREP.	3 wks	Mon 4/15/19	Fri 5/3/19
18	EXCAVATION FOR SPREAD FOOTING FOUNDATION	1 wk	Mon 5/6/19	Fri 5/10/19
19	CONSTRUCT SPREAD FOOTING FOUNDATION	2 wks	Mon 5/13/19	Fri 5/24/19
20	BACKFILL SPREAD FOOTING FOUNDATION FOUNDATION	1 wk	Mon 5/27/19	Fri 5/31/19
21	FLOOR SLAB AND INTERIOR PIPING	3 wks	Mon 6/3/19	Fri 6/21/19
22	ERECT STEEL TANK	10 wks	Mon 7/15/19	Fri 9/20/19
23	PAINT TANK	9 wks	Mon 9/23/19	Fri 11/22/19
24	ELECTRICAL/INSTR- TANK	2 wks	Mon 11/25/19	Fri 12/6/19
25	CATHODIC PROTECTION - TANK	1 wk	Mon 12/9/19	Fri 12/13/19
26	YARD PIPING / METER VAULTS / GENERATOR PAD	6 wks	Mon 11/25/19	Fri 1/3/20
27	ELECTRICAL / INSTR / GENERATOR - SITE	3 wks	Mon 12/30/19	Fri 1/17/20
28	FINISH GRADE / SEED / STONE / MISC. PADS	4 wks	Mon 1/6/20	Fri 1/31/20
29	FENCE / GATE / MOW STRIP	4 wks	Mon 2/3/20	Fri 2/28/20
30	PUNCHLIST	1 wk	Mon 2/24/20	Fri 2/28/20
31	TIE-INS TO YARD PIPING BY OTHERS	0 days	Mon 1/6/20	Mon 1/6/20
32	HYDROTEST TANK	1 wk	Mon 1/6/20	Fri 1/10/20
33	SUBSTANTIAL COMPLETION - 360 Days	0 days	Wed 2/12/20	Wed 2/12/20
34	FINAL COMPLETION - 420 Days	0 wks	Fri 4/10/20	Fri 4/10/20

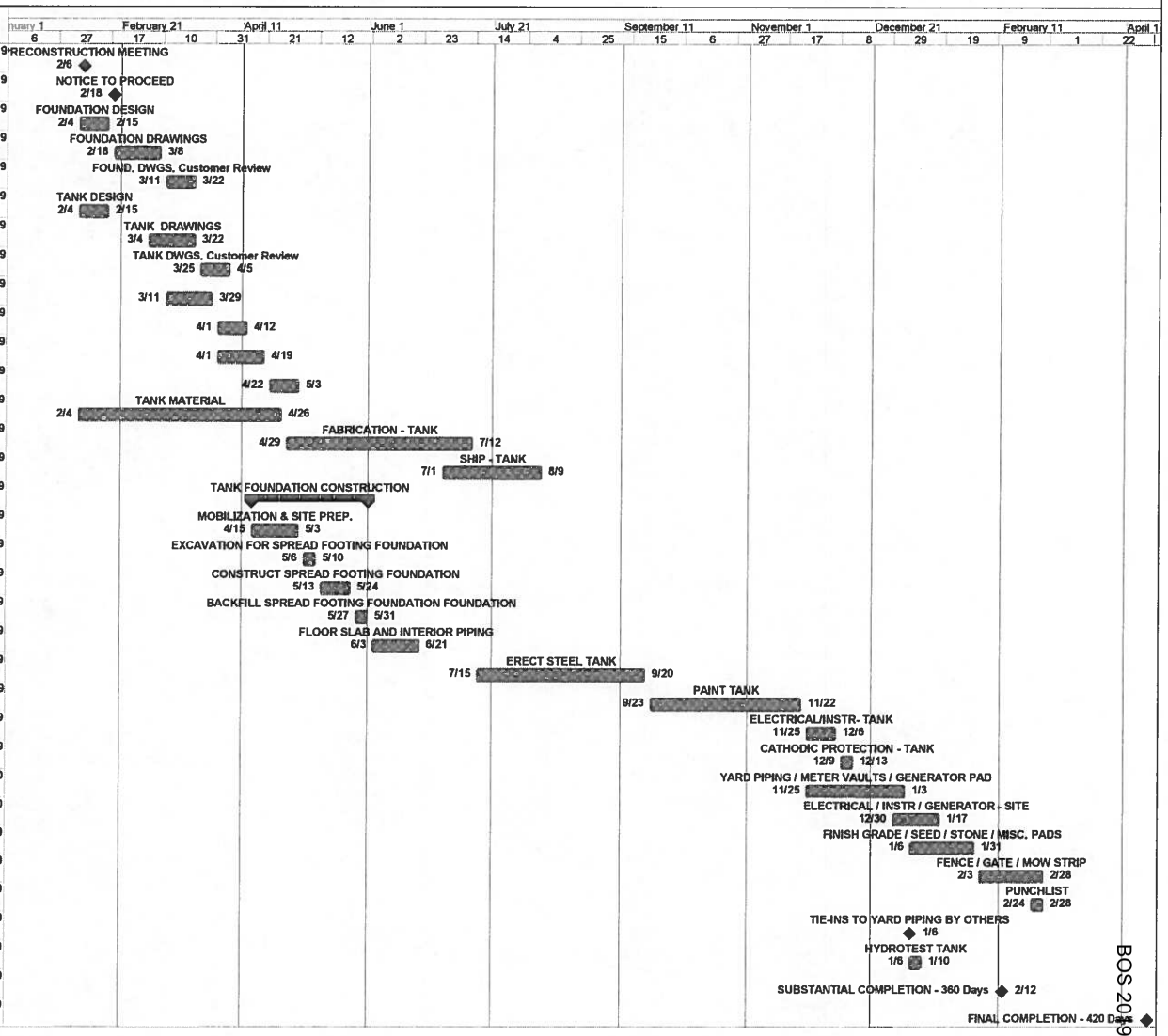

BOS 2019-01-09 p.677/1491

TAB D

FLUVANNA COUNTY BOARD OF SUPERVISORS
AGENDA ITEM STAFF REPORT

MEETING DATE:	January 9, 2019
AGENDA TITLE:	Zion Crossroad Construction Bid update
MOTION(s):	**I move the Board of Supervisors approve the Zion Crossroads Water Booster Station and Wastewater Pump Station Contract with Sargent Corporation in the amount of $1,900,000.00, and authorize the County Administrator to execute the Agreement, subject to approval as to form by the County Attorney.**

STRATEGIC INITIATIVE?	Yes	No	**If yes, list initiative(s):**	C9
	x			

AGENDA CATEGORY:	Public Hearing	Action Matter	Presentation	Consent Agenda	Other
		x			

STAFF CONTACT(S):	Cyndi Toler, Purchasing Officer
PRESENTER(S):	Cyndi Toler, Purchasing Officer
RECOMMENDATION:	Approval
TIMING:	Routine

DISCUSSION:

- **May 2018: IFB's issued for Construction**
  - Bid Opening on October 9, 2018 at the Fluvanna Community Center
  - Bids Received
    - 2018-03 Water and Sewer System- 6 Bids
    - 2018-04 Elevated Water Tank- 4 Bids
    - 2018-05 Water Booster Station and Wastewater Pump Station- 6 Bids
- Low bids have all been reviewed and approved by both Dewberry Engineers and the County Attorney's office.

	Estimated Construction Cost	Final Low Bid	Bidder	Bid to Estimate Difference
Water Booster Station	$642,600			
Wastewater Pump Station	$888,000			
Water Booster & Wastewater Pump Station Subtotal	**$1,530,600**	**$1,900,000**	**Sargent Corp.**	**$369,400**

- Sargent Corp has been in business since 1927
- They have a long history of successful similar and more extensive projects.

FISCAL IMPACT:	Budgeted in the ZXR Water system project				
POLICY IMPACT:	Na				
LEGISLATIVE HISTORY:	Na				
ENCLOSURES:	Zion Crossroads Water Booster Station and Wastewater Pump Station Contract				
REVIEWS COMPLETED:	Legal	Finance	Purchasing	HR	Other
	x		**x**		

Zion Crossroads Water Booster Station and Wastewater Pump Station Under IFB 2018-05

This document is based off of EJCDC C-520 Suggested Form of Agreement Between Owner and Contractor for Construction Contract (Stipulated Price), but has been substantially modified

THIS AGREEMENT (the "Agreement") is by and between Fluvanna County, a political subdivision of the Commonwealth of Virginia ("Owner") and Sargent Corporation, a Maine Corporation authorized to transact business in Virginia (referred to as both "Bidder" and "Contractor"). All capitalized terms used herein shall have the meaning as defined in the General Conditions, attached hereto as Exhibit F, unless the context requires otherwise.

For mutual consideration, the sufficiency of which is acknowledged, the Owner and Contractor hereby agree as follows:

ARTICLE 1 - WORK

1.01 Contractor shall complete all Work as specified or indicated in the Contract Documents. The Work is generally described as follows: Construction of the Zion Crossroads Water Booster Station and Wastewater Pump Station pursuant to that Invitation for Bids 2018-05 Zion Crossroads Water Booster Station and Wastewater Pump Station issued May 9, 2018 and all attachments, exhibits, and addendums thereto (the "IFB").

ARTICLE 2 - THE PROJECT

2.01 The Project for which the Work under the Contract Documents may be the whole or only a part is generally described as follows: Construction of the Zion Crossroads Water Booster Station and Wastewater Pump Station**.**

ARTICLE 3 - ENGINEER

3.01 The Project has been designed by Dewberry Engineers Inc. (Engineer), which is to assume all duties and responsibilities, and have the rights and authority assigned to Engineer in the Contract Documents in connection with the completion of the Work in accordance with the Contract Documents unless otherwise notified by the Owner from time to time.

ARTICLE 4 - CONTRACT TIMES

4.01 Time of the Essence

A. All time limits for Milestones, if any, Substantial Completion, and completion and readiness for final payment as stated in the Contract Documents are of the essence of the Contract.

4.02 Days to Achieve Substantial Completion and Final Payment

A. Phase l: The Work will be substantially completed within 360 days after the date when the Contract Times commence to run as provided in Paragraph 2.03 of the General Conditions,

and completed and ready for final payment in accordance with Paragraph 14.07 of the General Conditions within 600 days after the date when the Contract Times commence to run.

B. Phase 2: The Work will be substantially completed within 540 days after the date when the Contract Times commence to run as provided in Paragraph 2.03 of the General Conditions, and completed and ready for final payment in accordance with Paragraph 14.07 of the General Conditions within 600 days after the date when the Contract Times commence to run.

4.03 Liquidated Damages

A. Contractor and Owner recognize that time is of the essence as stated in Paragraph 4.01 above and that Owner will suffer financial loss if the Work is not completed within the times specified in Paragraph 4.02 above, plus any extensions thereof allowed in accordance with Article 12 of the General Conditions. The parties also recognize the delays, expense, and difficulties involved in proving in a legal or arbitration proceeding the actual loss suffered by Owner if the Work is not completed on time. Accordingly, instead of requiring any such proof, Owner and Contractor agree that as liquidated damages for delay (but not as a penalty), Contractor shall pay Owner $500.00 for each day that expires after the time specified in Paragraph 4.02 above for Substantial Completion until the Work is substantially complete. After Substantial Completion, if Contractor shall neglect, refuse, or fail to complete the remaining Work within the Contract Time or any proper extension thereof granted by Owner, Contractor shall pay Owner $500.00 for each day that expires after the time specified in Paragraph 4.02 above for completion and readiness for final payment until the Work is completed and ready for final payment.

ARTICLE 5 - CONTRACT PRICE

5.01 Owner shall pay Contractor for completion of the Work in accordance with the Contract Documents an amount in current funds equal to the sum of the amounts determined pursuant to Paragraphs 5.01.A, 5.01.B, and 5.01.C below:

A. For all Work other than Unit Price Work, a lump sum of: ONE MILLION EIGHT HUNDRED NINETY-EIGHT THOUSAND FIVE HUNDRED AND NO/100 DOLLARS ($1,898,500.00). See Part A and Part B of Basis of Bid on Bid Form submitted by Contractor.

All specific cash allowances are included in the above price in accordance with Paragraph 11.02 of the General Conditions.

B. For all Unit Price Work, an amount equal to the sum of the established unit price for each separately identified item of Unit Price Work times the actual quantity of that item:

The Bid prices for Unit Price Work set forth as of the Effective Date of the Agreement are based on estimated quantities. As provided in Paragraph 11.03 of the General Conditions, estimated quantities are not guaranteed, and determinations of actual

quantities and classifications are to be made by Engineer as provided in Paragraph 9.07 of the General Conditions.

For all Unit Price Work, see Part C and Part D of Basis of Bid on Bid Form (being $600.00 and $900.00, respectively) submitted by Contractor.

C. For all Work, at the prices stated in Contractor's Bid, attached hereto as an exhibit.

ARTICLE 6 - PAYMENT PROCEDURES

6.01 Final Payment, Submittal and Processing of Payments

A. The Contractor shall be paid a total of ONE MILLION NINE HUNDRED THOUSAND AND NO/100 DOLLARS ($1,900,000.00) (the "Contract Price") for the Work on the Project in accordance with this Agreement (and specifically with 5.01 above) after the completion of all of the Work on the Project to the sole satisfaction of the Owner; however the Contract Price may change as set forth in 5.01B above since the Unit Price Work Bid price amount is based on estimated quantities which are not guaranteed, and determinations of actual quantities and classifications are to be made by Engineer. Such payment shall be made in accordance with Section 47 "Payment" of the County's General Terms, as defined below in Article 9, and in no event, shall Contractor be paid prior to the Completion Date of the Project (being final completion to the sole satisfaction of the Owner and not substantial completion). Contractor shall submit an invoice on the Application for Payment in accordance with Article 14 of the General Conditions to the Owner upon Final Completion and the Owner shall pay a proper invoice within forty-five (45) days of receipt. Payment in full under for the Work will be made after final completion of the work. Contractor shall only submit Applications for Payment in accordance with Article 14 of the General Conditions. Applications for Payment will be processed by Owner as provided in the General Conditions and the County's General Terms.

6.02 Progress Payments; Retainage:

A. In lieu of payment in full at completion and if specifically requested by Contractor in its Bid, Owner shall make progress payments on account of the Contract Price on the basis of Contractor's Applications for Payment after competition of those milestones identified in an attachment to this Agreement as **Exhibit J** ("Payment Milestones"), but such progress payments shall only be up to those limits in Paragraph 6.02.A.1 below. All such payments will be measured by the schedule of milestones established as provided in Paragraph 2.07.A of the General Conditions. Such payments shall be made in accordance with Section 47 "Payment" of the County's General Terms, defined below in Article 9 below, and in no event, shall Contractor be paid prior to the completion date of each Milestone on the Project. Contractor shall submit an invoice on the Application for Payment in accordance with Article 14 of the General Conditions to the Owner upon completion of each milestone and the Owner shall pay a proper invoice within forty-five days of receipt. Payment in full for all of the Work will be made after final completion

of the work. Contractor shall only submit Applications for Payment in accordance with Article 14 of the General Conditions. Applications for Payment will be processed by Owner as provided in the General Conditions and the County's General Terms.

1. In no event will progress payments made to the Contractor for Milestones exceed either:

   a. **95 percent of Work completed** (with the balance being retainage). If the character and progress of the Work have not been satisfactory to Owner and Engineer, then additional retainage will apply; and

   b. **95 percent of cost of materials and equipment not incorporated in the Work** (with the balance being retainage).

   c. **The above retainage will only be paid to the Contractor upon final completion to the sole satisfaction of the Owner** after proper invoice to the Owner consistent with Section 6.01 above.

   d. Milestones may be identified in a schedule by the Contractor that references dates each Milestone will be completed within x number of days of the date the Contract Times commence under the Article 2.03 of the General Conditions.

6.03 Final Payment

A. Upon final completion and acceptance of the Work in accordance with Paragraph 14.07 of the General Conditions, Owner shall pay the remainder of the Contract Price, if any, as provided in said Paragraph 14.07.

ARTICLE 7 - INTEREST

7.01 There shall be NO interest owed on any late payment made by the Owner.

ARTICLE 8 - CONTRACTOR'S REPRESENTATIONS

8.01 In order to induce Owner to enter into this Agreement, Contractor makes the following representations:

A. Contractor has examined and carefully studied the Contract Documents and the other related data identified in the Bidding Documents.

B. Contractor has visited the Site and become familiar with and is satisfied as to the general, local, and Site conditions that may affect cost, progress, and performance of the Work.

C. Contractor is familiar with and is satisfied as to all federal, state, and local Laws and Regulations that may affect cost, progress, and performance of the Work.

D. Contractor has carefully studied all, if any: (l) reports of explorations and tests of subsurface conditions at or contiguous to the Site and all drawings of physical conditions relating to existing surface or subsurface structures at the Site (except Underground Facilities), if any, that have been identified in Paragraph SC-4.02 of the Supplementary Conditions as containing reliable "technical data," and (2) reports and drawings of

Hazardous Environmental Conditions, if any, at the Site that have been identified in Paragraph SC-4.06 of the Supplementary Conditions as containing reliable "technical data."

E. Contractor has considered the information known to Contractor; information commonly known to contractors doing business in the locality of the Site; information and observations obtained from visits to the Site; the Contract Documents; and the Site-related reports and drawings identified in the Contract Documents, with respect to the effect of such information, observations, and documents on (1) the cost, progress, and performance of the Work; (2) the means, methods, techniques, sequences, and procedures of construction to be employed by Contractor, including any specific means, methods, techniques, sequences, and procedures of construction expressly required by the Contract Documents; and (3) Contractor's safety precautions and programs.

F. Based on the information and observations referred to in Paragraph 8.01.E above, Contractor does not consider that further examinations, investigations, explorations, tests, studies, or data are necessary for the performance of the Work at the Contract Price, within the Contract Times, and in accordance with the other terms and conditions of the Contract Documents.

G. Contractor is aware of the general nature of work to be performed by Owner and others at the Site that relates to the Work as indicated in the Contract Documents.

H. Contractor has given Engineer written notice of all conflicts, errors, ambiguities, or discrepancies that Contractor has discovered in the Contract Documents, and the written resolution thereof by Engineer is acceptable to Contractor.

I. The Contract Documents are generally sufficient to indicate and convey understanding of all terms and conditions for performance and furnishing of the Work.

ARTICLE 9 - CONTRACT DOCUMENTS

9.01 Contents

A. The Contract Documents (also referred to as the “Contract Package”) consist of the following:

1. **This Agreement; and**
2. **The Exhibits attached hereto and made a material part hereof being the following:**

A. **Exhibit A:** Portions of the Invitation for Bid 2018-05 Project Manual, being the following:

A1 - Bidding Requirements being the Owner's Advertisement for Bids entitled Invitation for Bid #2018-05 Zion Crossroads Water Booster Station and Wastewater Pump Station together with the County of Fluvanna General

Terms, Conditions and Instructions to Bidders and Contractors (the "County's General Terms");

A2 - Instructions to Bidders; and

A3 - Any and all Addenda, amendments, exhibits, or attachments thereto, and specifically including Addendums No. 1 dated July 3, 2018, Addendum No. 2 dated August 24, 2018, and Addendum No. 3 dated September 26, 2018 (collectively the Addendums are sometimes referred to herein as the "IFB Addendums");

B. **Exhibit B:** The Contractor's Bid dated October 2, 2018, being the offer or proposal of the Bidder/Contractor submitted including the prescribed forms (including without limitation the Contractor's Qualification Statement, Bid Form, and Bid Bond) setting forth the prices for the Work to be performed including any and all exhibits, addenda or attachments thereto;

C. **Exhibit C:** Notice to Proceed (form of the same to be issued by the Owner within 30 days of the Effective Date of this Agreement, as defined below);

D. **Exhibit D:** Performance bond (entitled "Standard performance Bond for Construction Contracts");

E. **Exhibit E:** Payment Bond (entitled "Standard Labor and Material Payment Bond");

F. **Exhibit F:** General Conditions;

G. **Exhibit G:** Forms under the agreement, to be completed at appropriate times, from time to time, and used as described in the Contract Documents:

G1 – Contractors Application for Payment;

G2 – Certificate of Substantial Completion;

G3 – Work Change Directive;

G4 – Change Order;

G5 – Field Order; and

G6 – Request for Information;

H. **Exhibit H:** Technical Specifications (**Owner and Contractor acknowledge and agree that the IFB Addendums modified the Technical Specifications.)**

TECHNICAL SPECIFICATIONS

Division 01 - General Requirements
Section 01010 – Summary of Work
Section 01013 – Mobilization
Section 01200 – Price and Payment Procedure
Section 01310 – Project Meetings
Section 01320 – Scheduling of Construction
Section 01330 – Submittal Procedures
Section 01400 – Testing and Special Inspections
Section 01500 – Temporary Facilities and Controls
Section 01730 – Operating and Maintenance Data
Section 01770 – Closeout Procedures
Division 02 – Site Work
Section 02100 – Site Preparation
Section 02110 – Clearing and Grubbing
Section 02120 – Erosion and Sediment Control
Section 02220 – Demolition
Section 02230 – Dewatering
Section 02300 – Earthwork
Section 02325 – Trenching and Backfilling
Section 02600 – Piping System Testing
Section 02710 – Asphalt Paving
Section 02798 – Utility Location and Identification
Section 02821 – Chain Link Fence and Gates
Section 02920 – Turf and Grasses
Division 03 – Concrete
Section 03240 – Adhesive Anchors
Section 03300 - Cast-In-Place Concrete
Section 03400 – Precast Concrete Structures
Section 03600 – Grout
Division 04 – Unit Masonry Assemblies
Section 04220 – Concrete Unit Masonry
Division 05 – Metals
Section 05120 – Structural Steel
Section 05520 - Aluminum Access Hatches
Section 05530 - Pipe Supports and Stands
Division 06 – Wood and Plastics
Section 06100 – Rough Carpentry
Section 06160 – Sheathing
Section 06170 – Shop-Fabricated Wood Trusses
Division 07 – Thermal and Moisture Protection
Section 07212 – Board and Batt Insulation
Section 07220 – EIFS Exterior Wall System
Section 07411 – Preformed Metal Roof Panels
Section 07620 – Sheet Metal Flashing and Trim
Section 07631 – Gutters and Downspouts
Section 07720 – Roof Accessories
Section 07920 – Joint Sealants
Division 08 – Openings

Section 08111 – Hollow Metal Doors and Frames
Section 08200 – Sliding Window
Section 08332 – Overhead Coiling Door
Section 08710 – Door Hardware
Division 09 – Finishes
Section 09900 – Coatings and Paintings
Section 09910 – Concrete Epoxy Coatings
Division 11 – Equipment
Section 11100 – Process Piping
Section 11110 – Flow Measurement
Section 11150 – Valves, Hydrants, and Appurtenances
Section 11300 – Sewage Pumps
Section 11500 – Horizontal Split Case Pumps
Section 11810 – Pipe Identification Markers
Section 11820 – Disinfection and Flushing of Water Tanks and Piping Systems
Division 13 – Special Construction
Section 13005 – Signage
Section 13120 – Precast Concrete Building
Division 15 – Mechanical
Section 15010 – Basic Mechanical Requirements
Section 15738 – Split System Air-Conditioning Units
Section 15767 – Propeller Unit Heaters
Section 15838 – Exhaust Fan
Section 15856 – Combination Louver/Damper
Section 15010P – Basic Plumbing Requirements
Section 15083P – Plumbing Insulation
Section 15100P – Plumbing Valves
Division 16 – Electrical
Section 16010 – General Electrical Provisions
Section 16110 – Raceways
Section 16120 – Wiring
Section 16131 – Pull and Junction Boxes
Section 16132 – Pilot Devices
Section 16133 – Position Switches
Section 16134 – Switch and Outlet Boxes
Section 16170 – Variable Frequency Drive
Section 16470 – General Lighting and Distribution Panelboards
Section 16620 – Emergency Standby Power System
Appendix A – VUSBC Statement of Special Inspections
Appendix B – Geotechnical Engineering Reports

1. Zion Crossroads Water and Sewer System, Wastewater Pump Station, March 2017
2. Zion Crossroads Water and Sewer System, Water Booster Station, March 2017

I. **Exhibit I:** Drawings consisting of 52 sheets dated May 4, 2018 with each sheet bearing the following general title: Zion Crossroads Water Booster Station and Wastewater Pump Station.

J. **Exhibit J:** Payment Milestones – See Zion Crossroads WBS & WWPS Milestone Schedule. **All payments are subject to the provisions of Article 6 above. Notwithstanding any other provision of this Agreement and consistent with Article 6, all payments to be made under this Agreement shall be subject to withholding by the Owner of a five percent (5%) retainage only to be paid at Final Completion.**

B. The documents listed in Paragraph 9.01A are attached to this Agreement and made a material part of this Agreement.

C. The Contract Documents may only be amended, modified, or supplemented as provided in Paragraph 3.04 of the General Conditions.

D. **The parties agree that in the definition of "Resident Project Representative" in the "General Conditions" (being Exhibit F hereto), "Wayne Stephens Director of Public Works" is replaced with "Steven M. Nichols, Fluvanna County Administrator".**

E. In the event of a conflict between this Agreement and any of the exhibits the following shall be the order of preference in resolving any conflicts: (i) this **Agreement**, (ii) **Exhibit B**, being the Bid; (iii) the **IFB Addendums**; (iv) **Exhibit A**, except the IFB Addendums; (v) **Exhibit F**, being the General Conditions; (vi) **Exhibit H**, being the Technical Specifications, as modified be the IFB Addendums; (vii) **Exhibit I**, being the Project Drawings, as modified by the IFB Addendums, if applicable; (viii) **Exhibit C**, being the Notice to proceed; (ix) **Exhibit D**; (x) **Exhibit E**; and (xi) **Exhibit G**, as blank forms. For clarification, (i) being this Agreement above shall control over (ii) through (xi) above; (ii) being Exhibit B shall control over (iii) through (xi), and so forth. Whenever possible the Agreement and all of the exhibits shall be read together.

ARTICLE 10 - MISCELLANEOUS

10.01 Terms

A. Terms used in this Agreement will have the meanings stated in the Invitation for Bid, General Conditions and the Supplementary Conditions.

10.02 Assignment of Contract

A. No assignment by a party hereto of any rights under or interests in the Contract will be binding on another party hereto without the written consent of the party sought to be bound in its sole discretion; and, specifically but without limitation, moneys that may become due and moneys that are due may not be assigned without such consent (except to the extent that the effect of this restriction may be limited by law), and unless specifically stated to the contrary in any written consent to an assignment, no assignment will release or discharge the assignor from any duty or responsibility under the Contract Documents.

10.03 Successors and Assigns

A. Owner and Contractor each binds itself, its partners, successors, assigns, and legal representatives to the other party hereto, its partners, successors, assigns, and legal representatives in respect to all covenants, agreements, and obligations contained in the Contract Documents.

10.04 Severability

A. Any provision or part of the Contract Documents held to be void or unenforceable under any Law or Regulation shall be deemed stricken, and all remaining provisions shall continue to be valid and binding upon Owner and Contractor, who agree that the Contract Documents shall be reformed to replace such stricken provision or part thereof with a valid and enforceable provision that comes as close as possible to expressing the intention of the stricken provision.

10.05 Contractor's Certifications

A. Contractor certifies that it has not engaged in corrupt, fraudulent, collusive, or coercive practices in competing for or in executing the Contract. For the purposes of this Paragraph 10.05:

1. "corrupt practice" means the offering, giving, receiving, or soliciting of anything of value likely to influence the action of a public official in the bidding process or in the Contract execution;

2. “fraudulent practice" means an intentional misrepresentation of facts made (a) to influence the bidding process or the execution of the Contract to the detriment of Owner, (b) to establish Bid or Contract prices at artificial non-competitive levels, or (c) to deprive Owner of the benefits of free and open competition;

3. "collusive practice" means a scheme or arrangement between two or more Bidders, with or without the knowledge of Owner, a purpose of which is to establish Bid prices at artificial, non-competitive levels; and

4. "coercive practice" means harming or threatening to harm, directly or indirectly, persons or their property to influence their participation in the bidding process or affect the execution of the Contract.

10.06 The Effective Date of the Agreement. This Agreement is signed and sealed on the dates indicated below. As used in the Contract Documents the “Effective Date” and the “Effective Date of the Agreement” is February 6, 2019**; and notwithstanding any other provision of this Agreement, the Owner shall have 30 days from the Effective Date, being on or before March 8, 2019 to issue the Notice to proceed**. Notwithstanding the foregoing should the Owner issue the Notice to Proceed prior to February 6, 2019, then the date that times will commence to run as set forth in such Notice to Proceed or February 6, 2019, whichever is sooner, shall be the Effective Date” and the “Effective Date of the Agreement”.

10.07 Property Acquisition Accommodations. Owner and Contractor acknowledge and agree that significant property acquisitions (permanent easements, temporary easements, and land in fee) by the Owner are required for the Project and that issues may arise in which portions of the property interests needed for the Project or access thereto for the construction cannot be obtained prior to the time that the Contract Times commence to run. In the event that the County is reasonably and diligently pursuing such needed property interest(s), the Contractor agrees to make accommodations and accept change orders (whenever reasonable at no cost to the County) to avoid those portions of the Project, as will be set forth in the Notice to Proceed, during a portion of the Contract Times until such later time that the property can be acquired or accessed by the County for the Project whenever the Project schedule can reasonably be modified to account for the same.

[Signature page to follow.]

IN WITNESS WHEREOF, Owner and Contractor's duly authorized representatives have signed and sealed this Agreement as of the dates set forth below. Counterparts have been delivered to Owner and Contractor. All portions of the Contract Documents have been signed or have been identified by Owner and Contractor or on their behalf.

OWNER: Fluvanna County

By:_____

Steven M. Nichols, County Administrator

DATE:_____

_____

Attest: _____

_____

Title: _____

_____

Address for Notices:

Fluvanna County
Attn: County Administrator
_____
132 Main Street
_____
Palmyra, VA 22963
_____

With a copy to:
Fluvanna County Attorney
_____
414 East Jefferson Street
_____
Charlottesville, VA 22902
_____

CONTRACTOR: Sargent Corporation

By:_____

Printed Name: _____

Title: _____

DATE:

Attest:

Title:

Address for Notices:

Sargent Corporation (License No. 2705104156)
-
-
-

Address for Service of Process:
-
-
-

Approved as to form:

_____

_____
Fluvanna County Attorney

SEEN AND ACKNOWLEDGED:
ENGINEER:
Dewberry Engineers, Inc.

By:

Printed Name: _____

Title: _____

Date:_____

Exhibit A

Exhibit A1

COUNTY OF FLUVANNA, VIRGINIA
Invitation for Bid (IFB) #2018-05
Zion Crossroads Water Booster Station and Wastewater Pump Station
Issue Date: May 9, 2018
Due Date: July 24, 2018

Procurement & Technical Contact:
County of Fluvanna
Cyndi Toler, Purchasing Officer
132 Main Street
P.O. Box 540
Palmyra, VA 22963
Ph: (434) 591-1930 ext. 1124
Email: ctoler@fluvannacounty.org

All sealed bids shall be turned in no later 2:00 p.m. EST, July 24, 2018. All bids that are delivered via mail or are hand delivered must be addressed to the "Procurement Contact" listed above. Any Bids that are turned in late will be rejected and returned unopened. Any Bids sent in via facsimile, telephone, or email shall not be considered.

Bid documents may be picked up at the Fluvanna County Department of Finance located at 132 Main Street, 2nd floor, Palmyra, VA 22963 or by clicking on the following link: https://www.fluvannacounty.org/rfps.

1. GENERAL INFORMATION

By this Invitation for Bids ("IFB"), the Fluvanna County Board of Supervisors (hereinafter the "County" or "Owner") is seeking competitive sealed bids from qualified licensed contractors (herein referred to interchangeably as "Contractor" or "Bidder") to establish a firm fixed price contract with Contractor to furnish, deliver, supply and install all necessary labor, and materials associated with the construction of the Zion Crossroads Water Booster Station and Waste Water Pump Station and other work related thereto (collectively the "Stations") and complete any and all necessary or appropriate associated work at the site ("Site Work") in accordance with the specifications, terms and conditions stated herein. Collectively, the work on the Stations and Site Work are referred to herein as the "Project" or "project". The Project consists of providing and installing two (2) new buildings: a CMU block building with EIFS exterior wall system at the Zion Crossroads Water Booster Station and a precast concrete building at the Wastewater Pump Station in Fluvanna County, VA. This Project is one of three simultaneous projects related to the Zion Crossroads Water and Sewer System Project, the other projects are generally known as the "Water and Sewer System" and the "Elevated Storage Tank" (collectively the "Other Projects"). These Other Projects are under separate contracts and Contractor will be responsible for coordination with the Other Projects and associated contractors. The project includes, but is not limited to:

A. Phase 1 – Zion Crossroads Water Booster Station
   1. CMU block building with EIFS exterior wall system matching existing DOC buildings.
   2. Two (2) horizontal split case water booster pumps.
   3. Emergency backup generator and ATS.
   4. All piping, valves, and appurtenances as indicated on contract drawings.

B. Phase 2 – Zion Crossroads Wastewater Pump Station
   1. Precast concrete building.
   2. Two (2) submersible wastewater pumps installed in a precast concrete wetwell.
   3. Emergency backup generator and ATS.
   4. All piping, valves, and appurtenances as indicated on contract drawings.

Bidders may bid on all of the work on the Station and Site Work for either just the Zion Crossroads Water Booster Station, all of the work on the Station and Site Work for the Zion Crossroads Wastewater Pump Station or all of the work on the Project for both Stations and all associated Site Work. If there is a cost savings associated with doing work on both Stations then such must be clearly identified by the Bidder in its Bid.

2. PLANS AND SPECIFICATIONS/EXHIBITS: The following exhibits are attached hereto and incorporated herein as material parts of this IFB (collectively the "Plans and Specifications"):

A. **APPENDIX I –** County of Fluvanna General Terms, Conditions and Instructions to Bidders and Contractors;

B. **INSTRUCTION TO BIDDERS** (based off of Engineers Joint Contract Documents Committee ("EJCDC") C-200 Suggested Instructions to Bidders for Construction Contracts, but is substantially modified);

C. **Contractor's Qualification Statement** (based off EJCDC form);

D. **Bid Form** (based off of EJCDC C-410 Suggested Bid Form for Construction Contracts, but is modified);

E. **Bid Bond** (EJCDC C-430 Bid Bond (Penal Sum Form);

F. **Notice of Award** (EJCDC C-510 Notice of Award);

G. **Agreement** (based off of EJCDC Suggested form of Agreement Between Owner and Contractor for Construction Contract (Stipulated Price), but is substantially modified);

H. **Notice to Proceed** (EJCDC C-550 Notice to Proceed);

I. **Standard Performance Bond for Construction Contracts**;

J. **Standard Payment Bond for Construction Contracts**;

K. **Contractor's Application for Payment** (EJCDC C-620 Contractor's Application for Payment);

L. **Certificate of Substantial Completion** (EJCDC C-625 Certificate of Substantial Completion);

M. **General Conditions** (Based off of EJCDC C-700 Standard General Conditions of the Construction Contract, but substantially modified);

N. **Supplementary Conditions** (Based off of EJCDC C-800 Supplementary Conditions of the Construction Contract, but substantially modified);

O. **Work Change Directive** (EJCDC C-940 Work Change Directive);

P. **Change Order** (based off of EJCDC C-941 Change Order, but substantially modified);

Q. **Field Order** (based off of EJCDC C-942 Field Order, but substantially modified);

R. **Request for Information form;**

S. **Pre-Bid Question Form** (suggested format); and

T. Any and all Project plans, documents, manuals, drawings, criteria, requirements, specifications or other materials attached to this IFB, incorporated by reference into any of the above documents or into this IFB by reference including without limitation all those Technical Specifications identified in the Table of Contents and those Sections entitled "Division 01 – General Requirements", "Division 02 – Site Work", "Division 03 – Concrete", "Division 04 – Unit Masonry Assemblies", "Division 05 – Metals", "Division 06 – Wood and Plastics", "Division07 – Thermal and Moisture Protection", "Division 08 – Openings", "Division 09 – Finishes", "Division 11 – Equipment", "Division 13 – Special Construction", "Division 15 – Mechanical", "Division 16 – Electrical" and "Appendix A –

VUSBC Statement of Special Inspections", "Appendix B – Geotechnical Engineering Reports" as well as the "Zion Crossroads Water Booster Pump Station and Wastewater Pump Station" drawings.

To the extent any exhibit hereto directly conflicts with APPENDIX I – County of Fluvanna General Terms, Conditions and Instructions to Bidders and Contractors (the "County's General Terms"), the County's General Terms shall control. Whenever possible exhibits shall be read together and all provisions and requirements thereof shall be met even if they cover the same subject matter.

This IFB and the Plans and Specifications are a material part of the Contract Documents as such is defined in the General Requirements.

3. PRE-BID CONFERENCE:

A. A mandatory Pre-Bid Conference will be held at the Fluvanna County Administration Building, Morris Room located at 132 Main St, Palmyra, Virginia 22963 at 10:00 AM, local prevailing time on June 27, 2017. All prospective bidders must attend.

B. At the pre-bid conference Bidders will be allowed to inspect and analyze the current environment and collect further data in determination of their ability to perform the work on the Project. Any Procurement and technical questions shall be directed to Cyndi Toler, Purchasing Officer at ctoler@fluvannacounty.org during the course of this solicitation. The Bidder shall be presumed to have made a reasonable inspection of the Site(s) before the time of Bid submission and shall be held responsible for all information available through such inspections; and submission of a Bid will be a confirmation that the Bidder did make a site inspection and is aware of all conditions affecting performance and price(s) submitted. The County may determine in its sole discretion that a second pre-bid conference is necessary, the date and time of any such second pre-bid conference will be disclosed in an amendment to this IFB.

4. SCOPE OF WORK: Contractor shall provide, furnish deliver, supply and install, all necessary or appropriate labor, services, parts, tools, materials, equipment, items and resources as may be required to complete the work on the Project (the "Scope of Work"), in accordance with the specifications and terms and conditions stated herein, which Scope of Work, shall include at minimum, but is not limited to, all of the following:

A. **Contractor Minimum Requirements:** At minimum the Contractor must meet these minimum performance standards:

i. The Contractor should have, at a minimum, a current Class "A" Contractor's license as issued by the Commonwealth of Virginia Board of Contractors, Department of Professional and Occupational Regulation.

ii. The Contractor shall possess the appropriate contractor's license with the specific specialty services as recognized by the Virginia Board for Contractors, Department of Professional and Occupational Regulation to perform any services required for the work on the Project.

iii. The Contractor's firm should have been in business providing similar services promulgated in this solicitation for a minimum of five (5) consecutive years.

iv. The Contractor's personnel assigned to the resulting contract should wear appropriate uniforms or attire that, at a minimum, bear the contractor's company name, the employees name, and shall be maintained in a professional condition at all times.

v. The Contractor shall be responsible for providing quality services on the Project in accordance with industry standards, plans, directions and instruction as provided hereunder and in any resulting Contract.

vi. All equipment, materials and installation work provided as a part of the Project shall conform to applicable Federal, State and local laws, regulations, rules and procedures including without limitation the Virginia Uniform Statewide Building Codes, OSHA and the specifications of this IFB.

vii. Contractor(s) shall report any safety concerns, near misses, accidents and injuries related to the work area to the County immediately.

viii. Contractor(s) shall warrant replace or repair any defective product, materials, installation or services on the Project for three (3) years from County's final acceptance of any services hereunder, work or services on the Project at no additional cost. County shall be deemed to have accepted services hereunder only after receipt of a proper and detailed invoice from Contractor for all of the work on the Project and payment by the County to Contractor in full on such invoice.

ix. Contractor(s) shall respond to emergency warranty repairs within one (1) day and shall respond to routine warranty repairs within three (3) business days.

x. The Contractor shall transfer and assign to the County any and all warranties or similar guarantees for any materials or products provided by Contractor to the County hereunder.

xi. The winning bidder will deliver a performance and payment bond in an amount equal to the contract price from an insurer licensed in Virginia.

B. **Building Specifications:** At minimum, the Stations and Site Work and all work on the Project must meet the following requirements:

i. Be in all respects consistent with and meet any and all provisions, notes, requirements or specifications any and all attachments to this IFB (the "Plans and Specifications"). Site work is required to the extent necessary to produce a finished Project that meets or exceeds all the requirements and specifications provided in this IFB, including without limitation the Plans and Specifications.

ii. All work, services, labor and materials shall be consistent with requirements of Applicable Law (as defined in 4(G) below).

C. **ADDITIONAL REQUIREMENTS:** The Contractor shall

i. Assign a Supervisor to the project that shall be the main point of contact for the project.

ii. Assure and guaranty that all equipment, materials, and installation work shall conform to the most current adopted Virginia Uniform Statewide Building Codes, OSHA, and this IFB.

iii. Examine the work areas and site conditions under which work stated herein shall be performed. Contractor shall notify County of any condition(s) which may affect the Project.

iv. Locate and clearly mark all underground utilities prior to construction.

v. Perform all site preparation work inclusive of soil excavation and rough grade.

vi. Provide grade stakes or locator flags to flag corners of building.

vii. Obtain building permit.

viii. Provide on-site supervision of construction activities.

ix. Provide final approval/inspection and acceptance of Stations, etc. for the Project.

x. Provide finished grading work.

xi. Verify site preparation work with a County designated Project Manager.

xii. Deliver building materials to site location as designated by the Project Manager.

xiii. Erect building(s).

xiv. Furnish and install all supplementary or miscellaneous items, appurtenances and devices incidental to or necessary for a sound, secure and complete installation.

xv. Provide County with any applicable manufacturer warranties.

xvi. Agree to all of the provisions of the County of Fluvanna's General Terms, Conditions and Instructions to Bidders and Contractors attached to this IFB as Appendix I and further shall agree that any resulting contract awarded pursuant to this IFB shall incorporate by reference as material provisions of such Contract the County of Fluvanna's General Terms, Conditions and Instructions to Bidders and Contractors. Any resulting Contract shall be in form acceptable to the County in its sole discretion.

D. **PROTECTION OF PERSON AND PROPERTY:**

i. All materials shall be protected from damage during delivery, storage and installation.

ii. Work can be done on property from sun up to sun down 7 days a week.

iii. The Contractor is responsible to keep a clean and safe construction area at the end of each work day.

iv. Contractor shall be responsible for initiating, maintaining and supervision of all safety precautions in connection with the work being performed. Any damage to existing Property, site, buildings, land or personal property, resulting from the Work on the Project or the performance of a Contract awarded pursuant to this IFB shall be repaired or replaced at the sole cost and expense of the Contractor to the satisfaction of the County. The Contractor shall repair and/or replace any damage done to any County property by their employees or resulting from Contractor's services as soon as practicable, but in any event, no more than ten (10) calendar days after notification by the County. All such repairs or replacements shall be completed to the County's sole satisfaction. To protect the Contractor, the Contactor shall document any damages in the project area prior to commencing work. This written record shall be provided to the County prior to commencing work.

E. **BUILDING PERMITS & INSPECTIONS:**

i. The Contractor shall locate all underground utilities and their depth and location prior to starting any work on the Project.

ii. The Contractor shall apply for all required building permits before starting the Work on this Project.

iii. Contractor shall notify the county to arrange for inspections at agreed milestones and shall notify for final inspection.

iv. Plans and Specifications are attached hereto.

F. **INSURANCE REQUIREMENTS:**

i. The Contractor shall agree to carry the required liability insurances that are listed under item number 39 of the "GENERAL TERMS, CONDITIONS AND INSTRUCTIONS TO BIDDERS AND CONTRACTORS" attached hereto as Appendix I and also as required by the Contract Documents.

ii. By signing and submitting a proposal under this solicitation, the Contractor certifies that if awarded the contract, it will have the insurance coverage required at the time the work commences. The Contractor further certifies that the contractor will maintain the specified coverage during the entire term of the contract and that all insurance coverage will be provided by insurance companies authorized to sell insurance in Virginia by the Virginia State Corporation Commission.

iii. During the period of the contract the County reserves the right to require the Contractor to furnish certificates of insurance for the coverage from time to time.

iv. This is a construction contract under the Virginia Public Procurement Act and Performance and Payment Bonds shall be required pursuant to Virginia Code Section 2.2-4337.

G. **APPLICABLE LAW:** The Contractor shall comply with applicable federal, State and local laws, ordinances, rules and regulations in performance of the Contract ("Applicable Law"), including without limitation:

i. The Americans with Disabilities Act, as this Project is a new construction Project for a unit of government; and

ii. The Virginia Statewide Building Code.

5. SUBMITTAL INSTRUCTIONS

A. The County will not be responsible for any expenses incurred by a Contractor in preparing and submitting a Bid. All Bids shall provide a straight-forward, concise delineation of the Contractor's capabilities to satisfy the requirements of this IFB. Emphasis should be on completeness and clarity of content. The contents of the Bid submitted by the successful Bidder and this IFB, and any amendments thereto, will become part of any contract awarded as a result of this IFB.

B. The format of each bid must contain the following elements organized into separate chapters and sections, as the Bidder may deem appropriate. The following paragraphs provide guidelines to each Bidder for information to include in the bid document:

C. **Cover Letter** - Provide a cover letter that confirms the Bidder's understanding of this IFB, a general understanding of the Project, an overview of the history and qualifications of the Contractor.

D. **Overview** - The purpose of this section is to provide Fluvanna County with an overview of the history, qualifications and abilities of the Contractor's firm and for the Contractor to demonstrate the specific qualifications of the staff the Contractor will assign to this Project if selected. At a minimum, the proposal should: (i) Designate a Project Manager and indicate office location; and (ii) Include the organization chart, functional discipline, and responsibilities of Project team members.

E. **Resumes/Qualifications -** Provide a concise resume or description of each team member's education, relevant professional experience, length of time employed by the Contractor and/or sub-consultant, and professional licenses. Each Contractor submitting a proposal shall provide an updated statement of qualifications highlighting the expertise and experience of the Contractor and its personnel related to the Project.

F. **Demonstrated History of Successful Projects** - Discuss recent project information of similar type to the Project completed by the Contractor including the project name, location, brief description of the project, description of the scope of services provided, and principal contact person. List all work of a similar nature to the Project completed for any department or agency of the Commonwealth of Virginia and any Virginia public body or locality.

G. **Proposed Sub-Consultants** - The Contractor shall clearly state whether it is proposing to subcontract any of the work herein. The names of all proposed sub-contractors shall be provided. By proposing such firm(s) or individuals, the Contractor assumes full liability for the sub-consultant's performance. The Contractor shall state the amount of previous work experience with the sub-consultant(s).

H. **References:** Provide the current name, address, and telephone number of at least five (5) references the Contractor has served either currently or in the past three (3) years; preferably those where one or more of the Project team members provided the same or similar services as requested herein. Indicate the Scope of Services provided to each reference.

I. **Pricing** – Notwithstanding any other provision contained herein or in any exhibit hereto, please provide flat lump sum pricing. The lump sum price shall include all labor, materials, services, equipment, tools, consumables, parts, supervision, permitting, overhead, administrative, overhead, delivery, shipping, handling, travel and other costs, fees or charges of any kind related to or required for the Work on the Project.

J. **Project Full Specifications** – Must meet all Plans and Specifications contained herein.

K. **Forms:** All forms required to be submitted under this IFB must be included in the Bid, including without limitation,

i. Vendor Data Sheet (Attachment A)
ii. Proof of Authority to Transact Business in Virginia (Attachment B)
iii. Certificate of No Collusion (Attachment C)
iv. Bidder Statement (Attachment D); and
v. Any forms required by the Plans and Specifications

L. The County is not responsible for failure to locate, consider and evaluate qualification factors presented outside this format.

M. Any information thought to be relevant, but not applicable to the enumerated scope of work, should be provided as an appendix to the bid. If publications are supplied by the Officer to respond to a requirement, the response should include reference to the document number and page number. Bids not providing this reference may be considered to have no reference material included in the additional documents.

N. Each Contractor submitting a bid shall provide an updated statement of qualifications. The following is the minimum to be considered a complete bid:

i. Expertise and experience of the Contractor related to the scope of services contained in this IFB. This section shall include recent project information of similar type completed by the Contractor along with the name and telephone number of the point of contact for each project.
ii. Financial responsibility of the Contractor.
iii. The Contractor should include a street address of the office proposed to handle the work.
iv. Identification and statement of qualifications of the construction project team who will be assigned to the Project for actual "hands on" work, as well as the principal assigned the Project for oversight responsibilities.
v. Provide your proposed Project timeline/completion schedule.

O. The County is not responsible for failure to locate, consider and evaluate qualification factors presented outside this format.

6. SUBMITTAL INSTRUCTIONS

A. **Each Bidder must submit one (1) original and four (4) copies along with one (1) electronic**

copy of its bid documents on CD ROM, DVD, or USB flash drive/memory stick.

B. An authorized representative of the Bidder shall sign bid documents. All information requested should be submitted. Failure to submit all information requested may result in the bid being rejected by the County.

C. All forms attached to this IFB must be fully completed, executed by the Bidder and returned as a part of Contactor's Bid.

D. **Each bid shall be in writing and received in hard copy by the deadline. Oral bids, bids received by telephone, fax, telegraph, or email shall be rejected.**

7. CONTRACT AWARD: The contract will be awarded to the lowest responsible and responsive bidder whose bid, conforming to this IFB, is most advantageous to the County, considering price and any other evaluation criteria set forth in the bid documents and consistent with the Virginia Procurement Act, the County's Code, the County's Procurement Policies and Procedures and other applicable law. Nothing herein requires that the County complete this Work and the County may determine not to award any Contract pursuant to this IFB in its sole discretion for any reason or no reason at all.

8. TERMS

A. The County's General Terms, Conditions, and Instructions to Bidders and Contractors are attached hereto and incorporated herein by reference as Appendix I. These provisions bind all Bidders. Further, the conditions and requirements of this IFB, including, but not limited to, County's General Terms, Conditions, and Instructions to Bidders and Contractors, are a material part of any contract awarded between the County and the successful Bidder(s).

B. Awards shall be made to as many Bidders as deemed necessary to fulfill the anticipated requirements of the County. The County may award contracts to multiple Bidders and use their services for some or all of the projects identified herein. The County may choose not to award a contract or Notice to Proceed for any or all projects described herein.

C. The Contract awarded hereunder shall be in a form similar to that Agreement attached herein and referenced in Article 2(G) and acceptable to the County in its sole discretion.

VENDOR DATA SHEET

Note: The following information is required as part of your response to this solicitation. Failure to complete and provide this sheet may result in finding your bid nonresponsive.

1. Qualification: The vendor must have the capability and capacity in all respects to satisfy fully all of the contractual requirements.

2. Vendor's Primary Contact:
Name: _____ Phone: _____

3. Years in Business: Indicate the length of time you have been in business providing this type of good or service: _____ Years _____ Months

4. Vendor Information:
FIN or FEI Number: _____ If Company, Corporation, or Partnership
SSN: _____ (If Vendor is a sole proprietor)

5. Indicate below a listing of at least four (4) current or recent accounts, either commercial or governmental, that your company is servicing, has serviced, or has provided similar goods. Include the length of service and the name, address, and telephone number of the point of contact.

Company:	Contact:
Phone:	Email:
Dates of Service:	$$ Value:

Company:	Contact:
Phone:	Email:
Dates of Service:	$$ Value:

Company:	Contact:
Phone:	Email:
Dates of Service:	$$ Value:

Company:	Contact:
Phone:	Email:
Dates of Service:	$$ Value:

By my signature below, I, as a duly authorized representative of the entity named below, certify the accuracy of the foregoing information:

_____ Date: _____
Legal Name of Entity if Applicable

By: _____ (SEAL) Print Name: _____
Signature of Authorized Representative

Print Title: _____

Vendor Certification (for a Sole Proprietor):

_____ (SEAL) Print Name: _____ Date: _____
Signature

PLEASE RETURN THIS PAGE WITH PROPOSAL SUBMISSION – [REQUIRED]

PROOF OF AUTHORITY TO TRANSACT BUSINESS IN VIRGINIA

THIS FORM MUST BE SUBMITTED WITH YOUR PROPOSAL/BID. FAILURE TO INCLUDE THIS FORM MAY RESULT IN REJECTION OF YOUR PROPOSAL/BID

Pursuant to Virginia Code §2.2-4311.2, an Offeror/Bidder organized or authorized to transact business in The Commonwealth pursuant to Title 13.1 or Title 50 of the Code of Virginia shall include in its proposal/bid the identification number issued to it by the State Corporation Commission ("SCC"). Any Offeror/Bidder that is not required to be authorized to transact business in the Commonwealth as a foreign business entity under Title 13.1 or Title 50 of the Code of Virginia or as otherwise required by law shall include in its proposal/bid a statement describing why the Offeror/Bidder is not required to be so authorized. Any Offeror/Bidder described herein that fails to provide the required information shall not receive an award unless a waiver of this requirement and the administrative policies and procedures established to implement this section is granted by the County Administrator, as applicable. If this quote for goods or services is accepted by the County of Fluvanna, Virginia, the undersigned agrees that the requirements of the Code of Virginia Section 2.2-4311.2 have been met.

Please complete the following by checking the appropriate line that applies and providing the requested information. ***PLEASE NOTE: The SCC number is NOT your federal ID number or business license number.***

A._____ Offeror/Bidder is a Virginia business entity organized and authorized to transact business in Virginia by the SCC and such vendor's Identification Number issued to it by the SCC is _____.

B._____ Offeror/Bidder is an out-of-state (foreign) business entity that is authorized to transact business in Virginia by the SCC and such vendor's Identification Number issued to it by the SCC is _____.

C._____ Offeror/Bidder does not have an Identification Number issued to it by the SCC and such vendor is not required to be authorized to transact business in Virginia by the SCC for the following reason(s): **Please attach additional sheets if you need to explain why such Offeror/Bidder is not required to be authorized to transact business in Virginia.**

Legal Name of Company (as listed on W-9): _____
Legal Name of Offeror/Bidder: _____
Date: _____
Authorized Signature: _____
Print or Type Name and Title: _____

PLEASE RETURN THIS PAGE WITH PROPOSAL SUBMISSION – [REQUIRED]

CERTIFICATE OF NO COLLUSION:

The undersigned, acting on behalf of _____, does hereby certify in connection with the procurement and proposal to which this Certificate of No Collusion is attached that:

This proposal is not the result of, or affected by, any act of collusion with another person engaged in the same line of business or commerce; nor is this proposal the result of, or affected by, any act of fraud punishable under Article 1.1 of Chapter 12 of Title 18.1 of the Code of Virginia, 1950, as amended (18.2-498.1 et seq.).

The undersigned declares that the person or persons signing this proposal is/are fully authorized to sign the proposal on behalf of the firm listed and to fully bind the firm listed to all conditions and provisions thereof.

Respectfully submitted this _____ day of _____, 2015.

_____
Legal Name of Entity

By: _____ (SEAL)
Signature of Authorized Representative

Print Name: _____

Print Title: _____

Date: _____

ACKNOWLEDGEMENT

State of _____
In the County/City of _____, **to-wit:**

The foregoing Certification of No Collusion was subscriber and sworn to before me by_____ (Print Name), _____ (Print Title) on behalf of _____ (Print Name of Entity) on this _____ day of _____ (month), _____ (year).

_____
Notary Public

My commission expires: _____

Registration Number: _____

PLEASE RETURN THIS PAGE WITH PROPOSAL SUBMISSION – [REQUIRED]

OFFEROR STATEMENT

The undersigned Offeror hereby certifies that the Offeror has carefully examined all instructions, plans, conditions, specifications and other documents or items of this Request for Proposal and hereby submits this Proposal pursuant to such instructions, plans, conditions, specifications and other documents or items.

Complete if Offeror is an Entity:

WITNESS the following duly authorized signature and seal:

Name of Entity: _____
By: _____ (SEAL)
Signature
Print Name: _____
Print Title: _____

STATE OF _____
COUNTY/CITY OF _____, to-wit:

The foregoing instrument was acknowledged before me this _____ day of _____ (month), _____ (year) by _____(Print Name), _____(Print Title) on behalf of _____ (Name of Entity).

_____ [SEAL]
Notary Public

My commission expires: _____
Notary registration number: _____

Complete if Offeror is a Sole Proprietor:
Witness the following signature and seal:

_____ (SEAL)
Signature
Print Name: _____

STATE OF _____
COUNTY/CITY OF _____, to-wit:
The foregoing instrument was acknowledged before me this _____ day of _____ (month), _____ (year) by _____ (Print Name), a sole proprietor.

_____ [SEAL]
Notary Public

My commission expires: _____
Notary registration number: _____

PLEASE RETURN THIS PAGE WITH PROPOSAL SUBMISSION – [REQUIRED]

Appendix I

COUNTY OF FLUVANNA

GENERAL TERMS, CONDITIONS AND INSTRUCTIONS TO BIDDERS AND CONTRACTORS

GENERAL TERMS, CONDITIONS AND INSTRUCTIONS TO BIDDERS AND CONTRACTORS

These General Terms, Conditions and Instructions to Bidders and Contractor (hereinafter referred to as the "General Conditions") shall apply to all purchases and be incorporated into and be a part of each Solicitation (as defined below) and every Contract (as defined below) awarded by Fluvanna County, a political subdivision of the Commonwealth of Virginia (hereinafter referred to as the "County") unless otherwise specified by the County in writing. Bidders, Offerors and Contractors or their authorized representatives are expected to inform themselves fully as to these General Conditions before submitting Bids or Proposals to and/or entering into any Contract with the County: failure to do so will be at the Bidder's/Contractor's own risk and except as provided by law, relief cannot be secured on the plea of error.

Subject to all Federal, State and local laws, policies, resolutions, regulations, rules, limitations and legislation, including the County's Procurement Policies and Procedures, Bids or Proposals on all Solicitations issued by County will bind Bidders or Offerors, as applicable, and Contracts will bind Contractors, to all applicable terms, conditions, instructions, rules and requirements herein set forth unless otherwise SPECIFICALLY set forth by the County in writing in the Solicitation or Contract. All provisions of these General Conditions are material to any contract between the County and a Contractor.

INTRODUCTION

1. **VIRGINIA PUBLIC PROCUREMENT ACT AND ETHICS IN PUBLIC CONTRACTING:** The Virginia Public Procurement Act of Virginia Code §§ 2.2-4300 *et seq.* (hereinafter the "VPPA") is incorporated herein by reference. Nothing in these General Conditions is intended to conflict with the VPPA and in case of any conflict, the VPPA controls. Specifically, the provisions of Article 6 of the VPPA (Virginia Code §§ 2.2-4367 through 2.2-4377) relating to ethics in contracting, shall be applicable to all Solicitations and Contracts solicited or entered into by the County. By submitting their Bids or signing any Contract, all Bidders and Contractors certify that they have not violated any of the provisions of Article 6 of the VPPA, including, but not limited to, that their Bids are made without collusion or fraud and that they have not offered or received any kickbacks or inducements.

2. **DEFINITIONS:** The definitions of Virginia Code §§ 2.2-4301, 2.2-4302.1 and 2.2-4302.2 are specifically incorporated herein by reference and as used in these General Conditions, whether capitalized or not, any of such defined terms have the same meaning as such terms have under the VPPA: such defined terms include: "Affiliate", "Best Value", "Business", "Competitive Negotiation", "Competitive Sealed Bidding", "Construction", "Construction Management Contract", "Design-Build Contract", "Employment Services Organization", "Goods", "Informality", "Job Order Contracting", "Multiphase Professional Services Contract", "Nonprofessional Services", "Potential Bidder or Offeror", "Professional Services", "Public Body", "Public Contract", "Responsible Bidder or Offeror", "Responsive Bidder", "Reverse Auctioning" and "Services". Additionally, as used in these General Conditions, the following terms, whether capitalized or not, have the following meanings:

a. Bid/Proposal: The offer of a Bidder or Offeror to provide specific Goods or Services at specified prices and/or other conditions specified in the Solicitation. The term "Bid" is used throughout these General Conditions and where appropriate includes the term "Proposal" or any modifications or amendments to any Bid or Proposal.

b. Bidder/Offeror/Vendor: Any individual(s), company, firm, corporation, partnership or other organization bidding or offering on any Solicitation issued by the County and/or offering to enter into Contracts with the County. The term "Bidder" is used throughout these General Conditions and where appropriate includes the term "Offeror" and/or "Vendor".

c. Contract: Any contract to which the County will be a party.

d. Contractor: Any individual(s), company, firm, corporation, partnership, or other organization to whom an award is made by the County or whom enters into any contract to which the County is a party.

e. County: The County of Fluvanna, a political subdivision of the Commonwealth of Virginia, including where applicable all agencies and departments of the County.

f. County Administrator: The Fluvanna County Administrator.

g. County Attorney: The Fluvanna County Attorney.

h. Purchasing Agent: The County Administrator is the County's Purchasing Agent and is responsible for the purchasing activity of Fluvanna County; and has signatory authority to bind the County to all contracts and purchases made lawfully under the Fluvanna County Small Purchasing Procedures. The Purchasing Agent has signatory authority to bind the County to all other contracts and purchases only after the contracts or purchases have been approved by a vote of the Fluvanna County Board of Supervisors.

i. General Terms, Conditions and Instructions to Bidders and Contractors (also referred to herein as the "General Conditions"): These General Terms, Conditions and Instructions to Bidders and Contractors shall be attached to and made a part of all Solicitations by the County and all Contracts to which the County is party.

j. His: Any references to "his" shall include his, her, their, or its as appropriate.

k. Invitation to Bid (also referred to herein as an "IFB"): A request which is made to prospective Bidders for their quotation on Goods or Services desired by the County. The issuance of an IFB will contain or incorporate by reference the General Conditions and the other specifications and contractual terms and conditions applicable to the procurement.

l. Purchasing Officer: The Purchasing Officer employed by the County and to whom Bidders/Contractors can submit questions relating to any Bid or Contract.

m. Request for Proposal (also referred to herein as a "RFP"): A request for an offer from prospective Offerors which shall indicate the general terms which are sought to be procured from Offerors. The RFP will specify the evaluation factors to be used and will contain or incorporate by reference the General Conditions and other applicable contractual terms and conditions, including any unique capabilities or qualifications that will be required of the Contractor.

n. Small Purchasing Procedures: The County's Small Purchasing Procedures, being Chapter 4 of the County's Procurement Policies and Procedures, a method of purchasing not requiring competitive sealed bids or competitive negotiation for single or term contracts for goods and services other than professional services if the aggregate or the sum of all phases is not expected to exceed $50,000; and also allowing for single or term contracts for professional services without requiring competitive negotiation, provided the aggregate or the sum of all phases is not expected to exceed $50,000.

o. Solicitation: The process of notifying prospective Bidders or Offerors that the County wishes to receive Bids or Proposals on a set of requirements to provide Goods or Services. "Solicitation" includes any notification of the County requirements may consist of public advertising (newspaper, County's website, or other electronic notification), the mailing of notices of Solicitation, any Invitation for Quotes ("IFQ"), Initiations to Bid ("IFB"), or Requests for Proposal ("RFP"), the public posting of notices, issuance of an Open Market Procurement ("OMP"), or telephone calls to prospective Bidders or Offerors.

p. State: The Commonwealth of Virginia.

3. **AUTHORITY:** The Purchasing Agent shall serve as the principal public purchasing official for the County, and shall be responsible for the procurement of goods, services, insurance and construction in accordance with the County's Procurement Policies and Procedures. The Purchasing Agent has responsibility and authority for negotiating, placing and when necessary modifying every Solicitation, Contract and purchase order issued by the County under the County's Small Purchasing Procedures. The Purchasing Agent has signatory authority to bind the County to all contracts and purchases made lawfully under the County's Small Purchasing Procedures. The Purchasing Agent has responsibility and authority for negotiating, placing and when necessary modifying every other Solicitation, Contract and purchase order issued by the County except that the Purchasing Agent has signatory authority to bind the County to all other contracts and purchases ONLY after the contracts or purchases have been adopted and approved by a vote of the Fluvanna County Board of Supervisors (the "Board").

Unless specifically delegated by the Board or the Purchasing Agent, and consistent with the limited authority granted thereto, no other County officer or employee is authorized to order supplies or Services, enter into purchase negotiations or Contracts, or in any way obligate the County for any indebtedness. Any purchase or contract made which is contrary to such authority shall be of no effect and void and the County shall not be bound thereby.

For convenience, the County's Purchasing Officer shall serve as an intermediary between the Purchasing Agent and the Bidder or Contractor and any Bidder or Contractor may direct communications regarding any purchase, Solicitation or Contract to the Purchasing Officer; however as stated *supra* only the Board or County's Purchasing Agent can bind the County and only upon the conditions stated *supra*.

CONDITIONS OF BIDDING

4. **COMPETITION INTENDED:** It is the County's intent to encourage and permit open and competitive bidding in all Solicitations. It shall be the Bidder's responsibility to advise the County in writing if any language, requirement, specification, etc., or any combination thereof, stifles competition or inadvertently restricts or limits the requirements stated in a Solicitation to a single source. The County must receive such notification not later than seven (7) business days prior to the deadline set for acceptance of the Bids. In submitting a Bid, the Bidder guarantees that he or she has not been a party with other Bidders to an agreement to bid a fixed or uniform price. Violation of this implied guarantee shall render the Bid of any Bidder involved void.

5. **DISCRIMINATION PROHIBITED:** Pursuant to Virginia Code § 2.2-4310, the County does not discriminate against Bidders, Offerors or Contractors because of race, religion, color, sex, national origin, age, disability, status as a service disabled veteran, or any other basis prohibited by state law relating to discrimination in employment. Whenever solicitations are made, the County shall include businesses selected from a list made available by the Department of Small Business and Supplier Diversity. Pursuant to Virginia Code § 2.2-4343.1, the County does not discriminate against "faith-based organizations", being a religious organization that is or applies to be a contractor to provide goods or services for programs funded by the block grant provided pursuant to the Personal Responsibility and Work Reconciliation Act of 1996, P.L. 104-193.

6. **CLARIFICATION OF TERMS:** Pursuant to Virginia Code § 2.2-4316, if any Bidder has questions or comments about the specifications or other Solicitation documents, the prospective Bidder should contact the County no later than seven (7) business days prior to the date set for the opening of Bids or receipt of Proposals. Any revisions to the Solicitation will be made only by written addendum issued by the County. Notifications regarding specifications may not be considered if received in less than seven (7) business days of the date set for opening of Bids/receipt of Proposals.

7. **MANDATORY USE OF COUNTY FORM AND TERMS AND CONDITIONS:** Unless otherwise specified in the Solicitation, all Bids must be submitted on the forms provided by the County, including but not limited to, a Cover Sheet or Pricing Schedule, if applicable, properly signed in ink in the proper spaces and submitted in a sealed envelope or package. Unauthorized modification of or additions to any portion of the Solicitation may be cause for rejection of the Bid. However, the County reserves the right to decide, on a case by case basis, in its sole discretion, whether to reject any Bid or Proposal which has been modified.

These General Conditions are mandatory provisions of all Solicitations and all Contracts of the County.

8. **LATE BIDS & MODIFICATION OF BIDS:** Any Bid or modification thereto received at the office designated in the Solicitation after the exact time specified for receipt of the Bid is considered a late Bid or modification thereof. The County is not responsible for delays in the delivery of the mail by the U.S. Postal Service, private carriers or the inter-office mail system. It is the sole responsibility of the Bidder to ensure their Bid reaches County by the designated date and hour. The following rules apply to all Bids submitted to the County:

    a. The official time used in the receipt of Bids/Proposals is that time on the automatic time stamp machine in the Finance Department;
    b. Late Bids or modifications thereof will be returned to the Bidder UNOPENED, if Solicitation number, due date and Bidder's return address is shown on the container;
    c. If a Bid is submitted on time, however a modification thereto is submitted after the due date and time, then the County in its sole discretion may choose to consider the original Bid except that the County may not consider such original Bid if the Bid is withdrawn by the Bidder pursuant to Section 9 below; and
    d. If an emergency or unanticipated event or closing interrupts or suspends the County's normal business operations so that Bids cannot be received by the exact time specified in the Solicitation, then the due date/time specified for receipt of Bids will be deemed to be extended to the same time of day specified in the Solicitation on the first work day on which normal County business operations resume.

9. **WITHDRAWAL OF BIDS:**

    a. Pursuant to Virginia Code § 2.2-4330, a Bidder for a public construction contract, other than a contract for construction or maintenance of public highways, may withdraw his Bid from consideration if the price bid was substantially lower than the other Bids due solely to a mistake in the Bid, provided the Bid was submitted in good faith, and the mistake was a clerical mistake as opposed to a judgment mistake, and was actually due to an unintentional arithmetic error or an unintentional omission of a quantity of work, labor or material made directly in the compilation of a Bid, which unintentional arithmetic error or unintentional omission can be clearly shown by objective evidence drawn from inspection of original work papers, documents and materials used in the preparation of the Bid sought to be withdrawn.

    If a Bid contains both clerical and judgment mistakes, a Bidder may withdraw his Bid from consideration if the price bid would have been substantially lower than the other Bids due solely to the clerical mistake, that was an unintentional arithmetic error or an unintentional omission of a quantity of work, labor or material made directly in the compilation of a Bid that shall be clearly shown by objective evidence drawn from inspection of original work papers, documents and materials used in the preparation of the Bid sought to be withdrawn. The Bidder shall give notice in writing to the County of his or her claim of right to withdraw his or her Bid within two (2) business days after the conclusion of the Bid opening procedure and shall submit original work

papers with such notice.

b. A Bidder for a Contract other than for public construction may request withdrawal of his or her Bid under the following circumstances:

   i. Bids may be withdrawn on written request from the Bidder received at the address shown in the Solicitation prior to the time of opening.
   ii. Requests for withdrawal of Bids after opening of such Bids but prior to award shall be transmitted to the County, in writing, accompanied by full documentation supporting the request. If the request is based on a claim of error, documentation must show the basis of the error. Such documentation may take the form of supplier quotations, Bidder work sheets, etc. If Bid bonds were tendered with the Bid, the County may exercise its right of collection.

c. No Bid may be withdrawn under this Section 9 when the result would be the awarding of the Contract on another Bid of the same Bidder or of another Bidder in which the ownership of the withdrawing Bidder is more than five percent (5%).

d. If a Bid is withdrawn under the authority of this Section 9 the lowest remaining Bid shall be deemed to be the low Bid.

e. No Bidder who, is permitted to withdraw a Bid shall, for compensation, supply any material or labor to or perform any subcontract or other work agreement for the person or firm to whom the Contract is awarded or otherwise benefit, directly or indirectly, from the performance of the project for which the withdrawn Bid was submitted.

f. The County shall notify the Bidder in writing within five (5) business days of its decision regarding the Bidder's request to withdraw its Bid. If the County denies the withdrawal of a Bid under the provisions of this Section 9, it shall State in such notice the reasons for its decision and award the Contract to such Bidder at the Bid price, provided such Bidder is a responsible and responsive Bidder. At the same time that the notice is provided, the County shall return all work papers and copies thereof that have been submitted by the Bidder.

g. Under these procedures, a mistake shall be proved only from the original work papers, documents and materials delivered as required herein. The work papers, documents and materials submitted by the bidder shall, at the bidder's request, be considered trade secrets or proprietary information subject to the conditions of subsection F of Virginia Code § 2.2-4342.

10. ERRORS IN BIDS: When an error is made in extending total prices, the unit Bid price will govern. Erasures in Bids must be initialed by the Bidder. Carelessness in quoting prices, or otherwise in preparation of the Bid, will not relieve the Bidder. Bidders/Offerors are

cautioned to recheck their Bids for possible error. Errors discovered after public opening cannot be corrected and the Bidder will be required to perform if his or her Bid is accepted.

11. **IDENTIFICATION ON BID ENVELOPE:** All Bids, Proposals and requested copies thereof submitted to the County shall be in a separate envelope or package, sealed and identified with the following information clearly marked on the outside of the envelope or package:

    a. Addressed as indicated on page 1 of the solicitation;
    b. Solicitation number;
    c. Title;
    d. Bid due date and time;
    e. Bidder's name and complete mailing address (return address); and
    f. Pursuant to Virginia Code § 2.2-4311.2, the Bidder's identification number issued by the State Corporation Commission, or if the bidder is not required to be authorized to transact business in the Commonwealth as a foreign business entity under Title 13.1 or Title 50 or as otherwise required by law shall include in its bids or proposal a statement describing why the bidder or offeror is not required to be so authorized.

    If a Bid is not addressed with the information as shown above, the Bidder takes the risk that the envelope may be inadvertently opened and the information compromised, which may cause the Bid to be disqualified. Bids may be hand delivered to the designated location in the County's offices. No other correspondence or other Proposals/Bids should be placed in the envelope. Any Bidder or Offeror that fails to provide the information required in (f) above shall not receive an award unless a waiver is specifically granted by the County Administrator.

12. **ACCEPTANCE OF BIDS:** Unless otherwise specified, all formal Bids or Proposals submitted shall be valid for a minimum period of one hundred twenty (120) calendar days following the date established for opening or receipt, respectively, unless extend by mutual agreement of the parties. At the end of the one hundred twenty (120) calendar days the Bid/Proposal may be withdrawn at the written request of the Bidder. Thereafter, unless and until the Proposal is withdrawn, it remains in effect until an award is made or the Solicitation is canceled by the County. The County may cancel any Solicitation at any time by notice of such cancelation to the Bidders.

13. **COMPLETENESS:** To be responsive, a Bid must include all information required by the Solicitation.

14. **CONDITIONAL BIDS:** Conditional Bids are subject to rejection in whole or in part.

15. **RESPONSE TO SOLICITATIONS**: In the event a Bidder cannot submit a Bid on a Solicitation, the Bidder is requested to return the Solicitation cover sheet with an explanation as to why the Bidder is unable to Bid on these requirements, or if there be no cover sheet for the Solicitation a letter to the County explaining the same.

16. **BIDDER INTERESTED IN MORE THAN ONE BID AND COLLUSION:** More than one bid from an individual, firm, partnership, corporation or association under the same or different name will be rejected. Reasonable grounds for believing that a bidder is interested in more than one bid for the work contemplated will cause rejection of all bids in which the bidder is interested. Any or all bids may be rejected if there is any reason for believing that collusion exists among the bidders. Participants in such collusion may not be considered in future bids for the same work. Each bidder, as a condition of submitting a bid, shall certify that he is not a party to any collusive action as herein defined. However, a party who has quoted prices on work, materials, or supplies to a Bidder is not thereby disqualified from quoting prices to other Bidders or firms submitting a Bid directly for the work, materials or supplies.

17. **BID OPENING:** Pursuant to Virginia Code § 2.2-4301, all Bids received in response to an IFB will be opened at the date, time and place specified, and announced publicly, and made available for inspection as provided in Section 21 of these General Conditions. Proposals received in response to an RFP will be made available for inspection as provided in Section 21 of these General Conditions.

18. **TAX EXEMPTION:** The County is exempt from the payment of any federal excise or any Virginia sales tax. The price bid must be net, exclusive of taxes. Tax exemption certificates will be furnished if requested by the Bidder.

19. **DEBARMENT STATUS:** By submitting their Bids, Bidders certify that they are not currently debarred from submitting Bids on Contracts by the County, nor are they an agent of any person or entity that is currently debarred from submitting Bids or Proposals on Contracts by the County or any agency, public entity/locality or authority of the State.

20. **NO CONTACT POLICY:** No Bidder shall initiate or otherwise have contact related to the Solicitation with any County representative or employee, other than the Purchasing Officer or Purchasing Agent, after the date and time established for receipt of Bids. Any contact initiated by a Bidder with any County representative, other than the Purchasing Officer or Purchasing Agent, concerning this Solicitation is prohibited and may cause the disqualification of the Bidder.

21. **VIRGINIA FREEDOM OF INFORMATION ACT**: As provided under Virginia Code § 2.2-4342, all proceedings, records, Contracts and other public records relating to procurement transactions shall be open to the inspection of any citizen, or any interested person, firm or corporation, in accordance with the Virginia Freedom of Information Act of Virginia Code §§ 2.2-3700 *et seq.*, except:

a. Cost estimates relating to a proposed procurement transaction prepared by or for the County shall not be open to public inspection;
b. Any competitive sealed bidding Bidder, upon request, shall be afforded the opportunity to inspect Bid records within a reasonable time after the opening of Bids but prior to award, except in the event that the County decides not to accept any of the Bids and to reopen the Contract. Otherwise, Bid records shall be open to public inspection only after award of the Contract;
c. Any competitive negotiation Offeror, upon request, shall be afforded the opportunity to inspect Proposal records within a reasonable time after the evaluation and negotiations of Proposals are completed but prior to award except in the event that the County decides not to accept any of the Proposals and to reopen the Contract. Otherwise, Proposal records shall be open to the public inspection only after award of the Contract;
d. Any inspection of procurement transaction records under this Section 21 shall be subject to reasonable restrictions to ensure the security and integrity of the records;
e. Trade secrets or proprietary information submitted by a Bidder, Offeror or Contractor in connection with a procurement transaction shall not be subject to public disclosure under the Virginia Freedom of Information Act; however, the Bidder, Offeror or Contractor must invoke the protections of this Section 21 prior to or upon submission of the data or other materials, and must identify the data or other materials to be protected and State the reasons why protection is necessary; and
f. Nothing contained in this Section 21 shall be construed to require the County, when procuring by "competitive negotiation" (RFP), to furnish a Statement of reasons why a particular Proposal was not deemed to be the most advantageous to the County.

22. CONFLICT OF INTEREST: Bidder/Contractor certifies by signing any Bid/Contract to/with the County that no conflict of interest exists between Bidder/Contractor and County that interferes with fair competition and no conflict of interest exists between Bidder/Contractor and any other person or organization that constitutes a conflict of interest with respect to the Bid/Contract with the County.

SPECIFICATIONS

23. OMISSIONS OR DISCREPANCIES: Any items or parts of any equipment listed in a Solicitation which are not fully described or are omitted from such specification, and which are clearly necessary for the completion of such equipment and its appurtenances, shall be considered a part of such equipment although not directly specified or called for in the specifications. Should a Bidder find a discrepancy or ambiguity in, or an omission from, the Solicitation, including the drawings and/or specifications, he or she shall so notify the County within twenty-four (24) hours of noting the discrepancy, ambiguity or omission and in any

event no less than five (5) days prior to the date set for the opening of Bids. If necessary, the County will send a written addendum for clarification to all Bidders no later than three (3) days before the date set for opening of Bids. Any notification regarding specifications received less than five (5) days prior to the date set for the opening of Bids may or may not be considered by the County in its sole discretion. The Bidder shall abide by and comply with the true intent of the specifications and not take advantage of any unintentional error or omission, but shall fully complete every part as the true intent and meaning of the specifications and drawings. Whenever the mention is made of any articles, material or workmanship to be in accordance with laws, ordinances, building codes, underwriter's codes, A.S.T.M. regulations or similar expressions, the requirements of these laws, ordinances, etc., shall be construed as to the minimum requirements of these specifications.

24. **BRAND NAME OR EQUAL ITEMS:** Pursuant to Virginia Code § 2.2-4315, unless otherwise provided in the Solicitation, the name of a certain brand, make or manufacturer does not restrict Bidders to the specific brand, make or manufacturer named; it conveys the general style, type, character, and quality of the article desired, and any article which the County in its sole discretion determines to be the equal of that specified, considering quality, workmanship, economy of operation, and suitability for the purpose intended, shall be accepted. The Bidder is responsible to clearly and specifically indicate the product being offered and to provide sufficient descriptive literature, catalog cuts and technical detail to enable the County to determine if the product offered meets the requirements of the Solicitation. This is required even if offering the exact brand, make or manufacturer specified. Normally in competitive sealed bidding, only the information furnished with the Bid will be considered in the evaluation. Failure to furnish adequate data for evaluation purposes may result in declaring a Bid non-responsive. Unless the Bidder clearly indicates in its Bid that the product offered is "equal" product, such Bid will be considered to offer the brand name product referenced in the Solicitation.

25. **FORMAL SPECIFICATIONS:** When a Solicitation contains a specification which states no substitutes, no deviation therefrom will be permitted and the Bidder will be required to furnish articles in conformity with that specification.

26. **CONDITION OF ITEMS:** Unless otherwise specified in the Solicitation, all items shall be new, in first class condition.

AWARD

27. **RESPONSIBLE BIDDERS:** In determining whether a Bidder is a responsible Bidder as defined herein, at minimum, the following criteria will be considered:

a. The ability, capacity and skill of the Bidder to perform the Contract or provide the service required under the Solicitation;
b. Whether the Bidder can perform the Contract or provide the service promptly, or within the time specified, without delay or interference;
c. The character, integrity, reputation, judgment, experience and efficiency of the Bidder;
d. The quality of performance of previous Contracts or Services;
e. The previous and existing compliance by the Bidder with laws and ordinances relating to the Contract or Services;
f. The sufficiency of the financial resources and ability of the Bidder to perform the Contract or provide the service;
g. The quality, availability and adaptability of the Goods or Services to the particular use required;
h. The ability of the Bidder to provide future maintenance and service for the use of the subject of the Contract;
i. The number and scope of the conditions attached to the Bid;
j. Whether the Bidder is in arrears to the County on debt or Contract or is a defaulter on surety to the County or whether the Bidder's County taxes or assessments are delinquent; and
k. Such other information as may be secured by the County, the Purchasing Agent or the Purchasing Officer having a bearing on the decision to award the Contract. If an apparent low Bidder is not awarded a Contract for reasons of nonresponsibility, the County shall so notify that Bidder and shall have recorded the reasons in the Solicitation or Contract file.

28. AWARD OR REJECTION OF BIDS; WAIVER OF INFORMALITIES: The County shall award the Contract to the lowest responsive and responsible Bidder complying with all provisions of the IFB, provided the Bid price is reasonable and it is in the best interest of the County to accept it. Awards made in response to a RFP will be made to the highest qualified Offeror whose Proposal is determined, in writing, to be the most advantageous to the County taking into consideration the evaluation factors set forth in the RFP. The County reserves the right to award a Contract by individual items, in the aggregate, or in combination thereof, or to reject any or all Bids and to waive any informality in Bids received whenever such rejection or waiver is in the best interest of the County. Award may be made to as many Bidders/Offerors as deemed necessary to fulfill the anticipated requirements of the County. The County also reserves the right to reject the Bid if a Bidder is deemed to be a non-responsible Bidder. Pursuant to Virginia Code § 2.2-4319, an IFB, a RFP, any other solicitation, or any and all bids or proposals, may be canceled or rejected by the County at any time. The reasons for cancellation or rejection shall be made part of the contract file. The County shall not cancel or reject an IFB, a RFP, any other solicitation, bid or proposal solely to avoid awarding a contract to a particular responsive and responsible bidder or offeror.

29. EXCLUSION OF INSURANCE BIDS PROHIBITED: Pursuant to Virginia Code § 2.2-4320, notwithstanding any other provision of law or these General Conditions, no insurer licensed to transact the business of insurance in the State or approved to issue surplus lines insurance in the State shall be excluded from presenting an insurance bid proposal to the County in response to a RFP or an IFB; excepting that the County may debar a prospective insurer pursuant to its Debarment Policy, see Chapter 2 of the County's Procurement Policies and Procedures.

30. ANNOUNCEMENT OF AWARD: Upon the award or announcement of the decision to award a Contract as a result of this Solicitation, the County will publicly post such notice on the County's bulletin board located at 72 Main Street, 2nd Floor, Palmyra, Virginia 22963. Award results may also be viewed on the County's website.

31. QUALIFICATIONS OF BIDDERS OR OFFERORS: The County may make such reasonable investigations as deemed proper and necessary to determine the ability of the Bidder to perform the work/furnish the item(s) and the Bidder shall furnish to the County all such information and data for this purpose as may be requested. The County reserves the right to inspect Bidder's physical facilities prior to award to satisfy questions regarding the Bidder's capabilities. The County further reserves the right to reject any Bid or Proposal if the evidence submitted by or investigations of, such Bidder fails to satisfy the County that such Bidder is properly qualified to carry out the obligations of the Contract and to complete the work/furnish the item(s) contemplated therein.

32. TIE BIDS AND PREFERENCE FOR VIRGINIA PRODUCTS WITH RECYCLED CONTENT AND FOR VIRGINIA FIRMS:

a. Pursuant to Virginia Code § 2.2-4328, in the case of a tie bid on an IFB only, the County may give preference to Goods, Services and construction produced in Fluvanna County or provided by persons, firms or corporations having principal places of business in Fluvanna County. If such choice is not available, preference shall then be given to Goods produced in Virginia, or for goods, services or construction provided by Virginia persons, firms, corporations, pursuant Virginia Code § 2.2-4324. If no County or State choice is available, the tie shall be decided publicly by lot. The decision by the County to make award to one or more such Bidders shall be final.

b. Whenever the lowest responsive and responsible bidder is a resident of any other state and such state under its laws allows a resident contractor of that state a percentage preference, a like preference shall be allowed to the lowest responsive and responsible bidder who is a resident of Virginia and is the next lowest bidder. If the lowest responsive and responsible bidder is a resident of any other state and such state under its laws allows a resident contractor of that state a price-matching preference, a like preference shall be allowed to responsive and responsible bidders who are residents of Virginia. If the lowest bidder is a resident contractor of a state with an absolute preference, the bid shall not be considered. The Department of General Services shall post and maintain an updated list on its website of all states with an absolute preference for their resident contractors and those states that allow their resident contractors a percentage preference, including the respective percentage amounts. For

purposes of compliance with this Section 32, the County may rely upon the accuracy of the information posted on this website.

c. Notwithstanding the provisions of subsections a and b, in the case of a tie bid in instances where goods are being offered, and existing price preferences have already been taken into account, preference shall be given to the bidder whose goods contain the greatest amount of recycled content.

d. For the purposes of this Section 32, a Virginia person, firm or corporation shall be deemed to be a resident of Virginia if such person, firm or corporation has been organized pursuant to Virginia law or maintains a principal place of business within Virginia.

33. **NEGOTIATION WITH LOWEST RESPONSIBLE BIDDER:** Pursuant to Virginia Code § 2.2-4318, unless cancelled or rejected, a responsive Bid from the lowest responsible Bidder shall be accepted as submitted, except that if the Bid from the lowest responsible Bidder exceeds available funds, the County may negotiate with the apparent low Bidder to obtain a Contract price within available funds. However, the negotiation may be undertaken only under conditions and procedures described in writing and approved by the County prior to issuance of the IFB and summarized therein.

CONTRACT PROVISIONS

34. **APPLICABLE LAW AND COURTS**: Any Bid or Contract resulting from a Solicitation and its terms, including, but not limited to, the parties' obligations under it, and the remedies available to each party for breach of it, shall be governed by, construed and interpreted in accordance with the laws of the Commonwealth of Virginia, and exclusive jurisdiction and venue of any dispute or matters involving litigation between the parties hereto shall be in the courts of Fluvanna County, Virginia. Any jurisdiction's choice of law, conflict of laws, rules, or provisions, including those of the Commonwealth of Virginia, that would cause the application of any laws other than those of the Commonwealth of Virginia, shall not apply. The Contractor shall comply with applicable federal, State and local laws, ordinances, rules and regulations in performance of the Contract.

35. **PROVISION AND OWNERSHIP OF INFORMATION:** The County shall make a good faith effort to identify and make available to the Contractor all non-confidential technical and administrative data in the County's possession which the County may lawfully release including, but not limited to Contract specifications, drawings, correspondence, and other information specified and required by the Contractor and relating to its work under any Contract. The County reserves its rights of ownership to all material given to the Contractor by the County and to all background information documents, and computer software and documentation developed by the Contractor in performing any Contract.

36. **DOCUMENTS:** All documents, including but not limited to data compilations, drawings, reports and other material, whether in hard copy or electronic format, prepared, developed or

furnished by the Contractor pursuant to any Contract shall be the sole property of the County. At the direction of the County, the Contractor shall have the right to make copies of the documents produced available to other parties. The County shall be entitled to delivery of possession of all documents, upon payment in accordance with the terms of any Contract for the service incurred to produce such documents.

37. **CONFIDENTIALITY:** Contractor shall not publish, copyright or otherwise disclose or permit to be disclosed or published, the results of any work performed pursuant to this contract, or any particulars thereof, including forms or other materials developed for the County in connection with the performance by Contractor of its services hereunder, without prior written approval of the County. Contractor, cognizant of the sensitive nature of much of the data supplied by the County, shall not disclose any information (other than information which is readily available from sources available to the general public) obtained by it in the course of providing services hereunder without the prior written approval of the County, unless disclosure of such information by it is required by law, rule or regulation or the valid order of a court or administrative agency.

38. **INDEPENDENT CONTRACTOR:** The Contractor and any agents, or employees of the Contractor, in the performance of any Contract shall act as an independent contractor and not as officers, employees or agents of the County.

39. **INSURANCE:** The Contractor agrees that, during the period of time it renders services to the County pursuant to any Contract, it shall carry (and provide the County with evidence of coverage) the following minimum amounts of insurance:

Automobile	$500,000	Liability Medical Payment Comprehensive Collision
Public Liability	$1,000,000	
Professional Liability	$1,000,000	
Excess Liability	$2,000,000	Aggregate Over Above Policy Limits (Excluding Professional Liability)
Worker's Compensation	Amount required by Virginia law	

The Contract may specifically require the Contractor to carry higher minimum amounts of insurance.

In addition, the Contractor shall require, and shall include in every subcontract, that any subcontractor providing any goods or services related to such Contract obtain, and continue to maintain for the duration of the work, workers' compensation coverage in the amount required by Virginia law.

40. **KEY PERSONNEL:** For the duration of any Contract, the Contractor shall make no substitutions of key personnel unless the substitution is necessitated by illness, death, or termination of employment, or as expressly approved by the County. The Contractor shall notify the County within five (5) calendar days after the occurrence of any of these events and provide the information required by the paragraph below.

    The Contractor shall provide a detailed explanation of the circumstances necessitating any proposed substitution, complete resumes for the proposed substitute, and any additional information requested by the County. The proposed substitute should have comparable qualifications to those of the person being replaced. The County will notify the Contractor within fifteen (15) calendar days after receipt of all required information of its approval or disapproval of the proposed substitution.

41. **SEVERABILITY:** If any term, covenant or provision of these General Conditions or any Contract shall be held to be invalid, illegal or unenforceable in any respect, these General Conditions and any Contract shall remain in effect and be construed without regard to such provision.

42. **TITLES:** The titles and section headings herein and in any Contract are inserted solely for convenience and are not to be construed as a limitation on the scope of the provisions to which they refer.

43. **ATTORNEYS' FEES:** In the event of a dispute between the County and Contractor under any Contract which cannot be amicably resolved, in addition to all other remedies, the party substantially prevailing in any litigation shall be entitled to recover its reasonable expenses, including, but not limited to, reasonable attorneys' fees.

44. **NO WAIVER:** Neither any payment for, nor acceptance of, the whole or any part of the services by the County, nor any extension of time, shall operate as a waiver of any provision of any Contract, nor of any power herein reserved to the County, or any right to damages herein provided, nor shall any waiver of any breach of any Contract be held to be a waiver of any other or subsequent breach. Failure of the County to require compliance with any term or condition of any Contract shall not be deemed a waiver of such term or condition or a waiver of the subsequent enforcement thereof.

45. **NO FINANCE CHARGES:** No finance charges shall be paid by the County.

46. **ANTITRUST**: By entering into a Contract, the Contractor conveys, sells, assigns, and transfers to the County all rights, title and interest in and to all causes of the action it may now have or hereafter acquire under the antitrust law of the United States or the State, relating to the particular Goods or Services purchased or acquired by the County under said Contract.

Consistent and continued tie bidding could cause rejection of Bids by the County and/or investigation for antitrust violations.

47. PAYMENT: Pursuant to Virginia Code § 2.2-4352, unless more time is provided in the Solicitation or Contract, payment will be made forty-five (45) days after receipt by the County of a proper invoice, or forty-five (45) days after receipt of all Goods or acceptance of work, whichever is later. The County reserves the right to withhold any or all payments or portions thereof for Contractor's failure to perform in accordance with the provision of the Contract or any modifications thereto. Within twenty (20) days of receipt of proper invoice or of goods or services, the County shall notify the Contractor if any defect or impropriety that would prevent payment by the payment date. The following provisions apply to such payments:

a. Invoices for items/Services ordered, delivered/performed and accepted shall be submitted by the Contractor in duplicate directly to the payment address shown on the purchase order, Solicitation or Contract, as applicable. All invoices shall show the Contract number, purchase order number, or Solicitation number, as applicable, and as required under Virginia Code § 2.2-4354, either the individual Contractor's social security number or the Contractor's federal employer identification number, whichever is applicable.

b. Any payment terms requiring payment in less than forty-five (45) days will be regarded as requiring payment forty-five (45) days after receipt of proper invoice or receipt of all Goods or acceptance of work, whichever occurs later. Notwithstanding the foregoing, offers of discounts for payment in less than forty-five (45) days are valid and enforceable.

c. Pursuant to Virginia Code § 2.2-4353, the date any payment shall be deemed the date of postmark in all cases where payment is made by mail.

d. The County's fiscal year is July 1 to June 30. Contractors are advised to submit invoices, especially for Goods and/or Services provided in the month of June, for the entire month (i.e. June 1 - June 30), so that expenses are recognized in the appropriate fiscal year.

e. Any payment made by the Contractor to the County shall only be made in U.S. Dollars. If payment is received in foreign currency the County may, in its sole discretion, reject such payment and require immediate compensation in U.S. Dollars.

48. SUBCONTRACTORS: Pursuant to Virginia Code § 2.2-4354, in the event that any subcontractors are used by Contractor in connection with the work, Contractor shall:

a. Within seven (7) days after receipt of amounts paid to the Contractor for work performed by a subcontractor, either:
    i. Pay the subcontractor for the proportionate share of the total payment received attributable to the work performed by the subcontractor under any Contract; or

ii. Notify the County and subcontractor, in writing, of his intention to withhold all or a part of the subcontractor's payment with the reason for nonpayment.

b. Contractor shall require each subcontractor to provide either (i) for an individual, their social security numbers, or (ii) for proprietorships, partnerships, and corporations to provide their federal employer identification numbers.

c. The Contractor shall pay interest to any subcontractor on all amounts owed by the Contractor that remain unpaid after seven days following receipt by the Contractor of payment from the County for work performed by the subcontractor under any Contract, except for amounts withheld as allowed in subdivision (a)(II) above. Unless otherwise provided under the terms of any Contract, interest shall accrue at the rate of one percent (1%) per month.

d. The Contractor shall include in each of its subcontracts under any Contract a provision requiring each subcontractor to include or otherwise be subject to the above payment and interest requirements (a), (b) and (c) with respect to each lower tier subcontractor.

e. The Contractor's obligation to pay an interest charge to a subcontractor pursuant to the payment clause in this Section 48 shall not be construed to be an obligation of the County. No Contract modification may be made for the purpose of providing reimbursement for such interest charge. No cost reimbursement claim may include any amount for reimbursement for such interest charge.

49. RETAINAGE ON CONSTRUCTION CONTRACTS: Pursuant to Virginia Code 2§ 2.2-4333, if a Contract for construction provides for progress payments in installments based upon an estimated percentage of completion, then the contractor shall be paid at least ninety-five percent (95%) of the earned sum when payment is due, with no more than five percent (5%) being retained to ensure faithful performance of the contract. All amounts withheld may be included in the final payment. Any subcontract related to work on a Contract that provides for similar progress payments shall be subject to the provisions above and the Contractor agrees to include such provisions in every subcontract.

50. SUCCESSORS AND ASSIGNS: The County and the Contractor bind themselves and their respective successors and assigns to any Contract. The foregoing notwithstanding, the Contractor shall not assign, sublet or transfer its interest in any Contract without the prior written consent of the County, which may be granted or withheld in the County's sole discretion. Nothing hereinafter mentioned shall be construed as creating any personal liability on the part of any officer, agent or employee of the County, nor shall it be construed as giving any benefits hereunder to anyone other than the County and the Contractor.

51. DEFAULT: Failure of a Contractor to deliver Goods or Services in accordance with Contract terms and conditions and/or within the time specified, or within reasonable time as interpreted by the County in its sole discretion, or failure to make replacements/corrections of rejected articles/services when so requested, immediately or as directed by the County, or

failure of the Contractor to act in accordance with the Contract in any material respect, as reasonably determined by the County, shall constitute a "default" by the Contractor and shall further authority for the County to purchase in the open market articles/services of comparable grade/quality to replace the services, articles rejected, and/or not delivered. On all such purchases, the Contractor shall reimburse the County, within a reasonable time specified by the County, for any expense incurred in excess of Contract prices including, but not limited to, any purchase and administrative costs. Such purchases shall be deducted from the Contract quantities, if applicable. Should public necessity demand it, the County reserves the right to use or consume articles delivered or services performed which are substandard in quality, subject to an adjustment in price to be determined by the County. In case of any default, the County, after due oral or written notice if required in accordance with the Contract, may terminate the Contract at its option in its sole discretion effective immediately. These remedies shall be in addition to any other remedies which the County may have, including but not limited to, any remedies at law, under the Contract or in equity.

Notwithstanding the foregoing, the Contractor shall not be liable for damages for delay in shipment or failure to deliver when such delay or failure is the result of fire, flood, strike, act of God, act of Government, act of an alien enemy or by any other circumstances which, in the County's opinion, are beyond the control of the Contractor. Under such circumstances, however, the County may, at its sole discretion, terminate or cancel the Contract effective immediately.

52. NON-DISCRIMINATION ASSURANCES: The Contractor shall conform to the provisions of the Federal Civil Rights Act of 1964, as amended, as well as the Virginia Fair Employment Act of 1975, as amended, where applicable, and § 2.2-4311 of the Virginia Procurement Act:

a. During the performance of any Contract, the Contractor agrees as follows: the Contractor will not discriminate against any employee or applicant for employment because of race, religion, color, sex, national origin, age, disability, or other basis prohibited by state law relating to discrimination in employment, except where there is a bona fide occupational qualification reasonably necessary to the normal operation of the Contractor. The Contractor agrees to post in conspicuous places, available to employees and applicants for employment, notices setting forth the provisions of this nondiscrimination clause. The Contractor, in all Solicitations or advertisements for employees placed by or on behalf of the Contractor, will state that such Contractor is an equal opportunity employer. Notices, advertisements and Solicitations placed in accordance with federal law, rule or regulation shall be deemed sufficient for the purpose of meeting the requirements of this Section 52.

b. The Contractor shall include the provisions of paragraph (a) above in every subcontract or purchase over $10,000.00 so that the provisions will be binding upon each subcontractor or Vendor.

53. MODIFICATION:

a. Pursuant to Virginia Code § 2.2-4309, these General Conditions and any Contract entered into by the County and any Contractor shall not be subject to change, modification, or discharge except by written instrument signed by the County and Contractor, but no fixed-price contract may be increased by more than twenty-five percent (25%) of the amount of the contract or $50,000, whichever is greater, without the advance written approval of the County's Board. In no event may the amount of any contract, without adequate consideration, be increased for any purpose, including, but not limited to, relief of an offeror from the consequences of an error in its bid or offer.

b. The County may, but is not obligated to, extend the term of an existing contract for services to allow completion of any work undertaken but not completed during the original term of the contract.

c. Nothing in this Section 53 shall prevent the County from placing greater restrictions on contract modifications.

54. INDEMNIFICATION: Contractor agrees to indemnify, keep and save harmless the County, its officers, agents, officials, employees and volunteers against any and all claims, claims of injuries, death, damage to property, patent claims, suits, liabilities, judgments, losses, costs and expenses, including but not limited to costs of investigation, all reasonable attorneys' fees (whether or not litigation results), and the cost of any appeal, occurring or arising in connection with the Contractor's, its agents', subcontractors', employees', or volunteers' negligence or wrongful acts or omissions in connection with its performance of any Contract. The Contractor shall, at his or her own expense, appear, defend and pay all charges of attorneys and all costs and other expenses arising therefrom or incurred in connection therewith; and if any judgment shall be rendered against the County in any such action, the Contractor shall, at his or her own expenses, satisfy and discharge the same. Contractor expressly understands and agrees that any performance bond or insurance protection required by any Contract, or otherwise provided by the Contractor, shall in no way limit the responsibility to indemnify, keep and save harmless and defend the County as herein provided. Nothing contained in this Solicitation or the Contract shall be deemed to be a waiver of the County's sovereign immunity.

55. DRUG-FREE WORKPLACE: Pursuant to Virginia Code § 2.2-4312, in every Contract over $10,000.00 the following provisions apply: During the performance of any Contract, the Contractor agrees to (i) provide a drug-free workplace for the Contractor's employees; (ii) post in conspicuous places, available to employees and applicants for employment, a Statement notifying employees that the unlawful manufacture, sale, distribution, dispensation, possession, or use of a controlled substance or marijuana is prohibited in the Contractor's workplace and specifying the actions that will be taken against employees for violations of such prohibition; (iii) state in all Solicitations or advertisements for employees placed by or on behalf of the Contractor that the Contractor maintains a drug-free workplace; and (iv) include the provisions of the foregoing clauses in every subcontract or purchase order of over $10,000, so that the provisions will be binding upon each subcontractor or vendor.

For the purposes of this Section, "*drug-free workplace*" means a site for the performance of work done in connection with a specific Contract awarded to a Contractor in accordance with this the VPPA and the County's Procurement Procedures, the employees of whom are prohibited from engaging in the unlawful manufacture, sale, distribution, dispensation, possession or use of any controlled substance or marijuana during the performance of the Contract.

56. TERMINATION: Contracts will remain in force for full periods specified and/or until all articles ordered before date of termination shall have been satisfactorily delivered and accepted and thereafter until all requirements and conditions shall have been met, unless:

a. Terminated prior to expiration date by satisfactory deliveries of entire Contract requirements;

b. Terminated by the County upon thirty (30) days written notice to the Contractor at the County's convenience in the County's sole discretion ("termination for convenience"), unless a termination for convenience is specifically and expressly prohibited by the Contract. Any Contract cancellation notice shall not relieve the Contractor of the obligation to deliver and/or perform on all outstanding orders issued prior to the effective date of the termination;

c. Terminated by the County for cause, default or negligence on the part of the Contractor. However, pursuant to Section 51 of these General Conditions, the County may hold the Contractor responsible for any resulting additional purchase and administrative costs. There is no advance notice requirement in the event of Termination for Cause and termination is effective immediately upon notice to Contractor of the termination for cause;

d. Extended upon written authorization of County and accepted by Contractor, to permit ordering of unordered balances or additional quantities at Contract prices and in accordance with Contract terms.

57. APPROPRIATIONS: Notwithstanding any other provision of any Contract, the payment of the County's obligations under any Contract shall be subject to annual appropriations by the Board of Supervisors of the County in each fiscal year of monies sufficient to satisfy the same.

58. REFERENCES TO VIRGINIA LAW: Any reference in these General Conditions to the Code of Virginia or other relevant Federal, State or local law is incorporated in whole herein by reference as in effect at the time of the Solicitation or Contract as such statutory provisions may be amended or replaced by any statute dealing with the same or similar subject matter.

59. COOPERATIVE PROCUREMENT: Except as prohibited by the current Code of Virginia, all resultant Contracts will be extended to other Public Bodies of the Commonwealth of Virginia, to permit their ordering of Goods, supplies and/or Services at the prices and terms of the resulting Contract ("cooperative procurement"). By submitting any Bid or entering into

any Contract with the County a Bidder/Contractor expressly authorizes cooperative procurement under Virginia Code § 2.2-4304 to the full extent permitted by law. If any other public body decides to use any Contract, the Contractor must deal directly with that public body concerning all matters relating thereto, including but not limited to, the placement or orders, issuance of the purchase order, contractual disputes, invoicing and payment. The County acts only as the "Contracting Agent" for these public bodies. Any resulting contract with other public bodies shall be governed by the laws of that specific entity. It is the Contractor's responsibility to notify the public bodies of the availability of the Contract. Fluvanna County shall not be held liable for any direct or indirect costs, damages or other claim of any kind incurred by another public body or any Contractor as a result of any cooperative procurement.

60. AUDIT: The Contractor hereby agrees to retain all books, records and other documents relative to any Contract for five (5) years after final payment, or until audited by the County, whichever is sooner. The County, its authorized agents, and/or County auditors shall have full access to and right to examine any of said materials during said period.

61. GUARANTIES AND WARRANTIES: All guarantees, representations and warranties required shall be furnished by the Contractor and shall be delivered to the Purchasing Agent before final payment on any Contract is made. In addition to any guarantees, representations and warranties required under the Contract, the Contractor agrees to:

a. Save the County, its agents and employees harmless from liability of any nature or kind for the use of any copyrighted or un-copyrighted composition; secret process, patented or unpatented; invention; article or appliance furnished or used in the performance of a Contract for which the Contractor is not the patentee, assignee, licensee or owner;

b. Protect the County against latent defective material or workmanship and to repair or replace any damages or marring occasioned in transit or delivery;

c. Furnish adequate protection against damage to all work and to repair damages of any kind to the building or equipment, to the Contractor's own work or to the work of other contractors, for which the Contractor's workers are responsible;

d. Pay for all permits, licenses and fees and give all notices and comply with all laws, ordinances, rules and regulations of the County; and

e. Protect the County from loss or damage to County owned property while it is in the custody of the Contractor;

f. At minimum supply all Goods or Services with the manufacturer's standard warranty, if applicable; and

g. For any Contract involving Services of any nature, the Contractor further agrees to:

i. Enter upon the performance of Services with all due diligence and dispatch, assiduously press to its complete performance, and exercise therein the highest degree of skill and competence;
ii. Allow Services to be inspected or reviewed by an employee of the County at any reasonable time and place selected by the County;
iii. Acknowledges that the County shall be under no obligation to compensate Contractor for any Services not rendered in strict conformity with the Contract; and
iv. Stipulates that the presence of a County Inspector shall not lessen the obligation of the Contractor for performance in accordance with the Contract requirements, or be deemed a defense on the part of the Contractor for infraction thereof. The Inspector is not authorized to revoke, alter, enlarge, relax, or release any of the requirements of any Contract Any omission or failure on the part of the Inspector to disapprove or reject any work or material shall not be construed to be an acceptance of any such defective work or material.

62. PRICE REDUCTIONS: If at any time after the date of the Bid/Contract the Contractor makes a general price reduction in the comparable price of any material covered by the Contract to customers generally, an equivalent price reduction based on similar quantities and/or considerations shall apply to any Contract for the duration of the Contract period (or until the price is further reduced). Such price reduction shall be effective at the same time and in the same manner as the reduction in the price to customers generally. For purpose of this provision, a "general price reduction" shall mean any horizontal reduction in the price of an article or service offered (1) to Contractor's customers generally, or (2) in the Contractor's price schedule for the class of customers, i.e., wholesalers, jobbers, retailers, etc., which was used as the basis for bidding on this Solicitation. An occasional sale at a lower price, or sale of distressed merchandise at a lower price, would not be considered a "general price reduction" under this provision. The Contractor shall submit his or her invoice at such reduced prices indicating on the invoice that the reduction is pursuant to the "Price Reduction" provision of the Contract documents. The Contractor in addition will within ten (10) days of any general price reduction notify the County of such reduction by letter. FAILURE TO DO SO IS A DEFAULT UNDER THE CONTRACT AND MAY RESULT IN TERMINATION OF THE CONTRACT IN THE COUNTY'S DISCRETION. The Contractor, if requested, shall furnish, within ten (10) days after the end of the Contract period, a statement certifying either (1) that no general price reduction, as defined above, was made after the date of the Bid or Contract, or (2) if any such general price reductions were made, that as provided above, they were reported to the County within ten (10) days and the County was billed at the reduced prices. Where one or more such general price reductions were made, the statement furnished by the Contractor shall include with respect to each price reduction (1) the date when notice of any such reduction was issued, (2) the effective date of the reduction, and (3) the date when the County was notified of any such reduction.

63. COMPLIANCE WITH IMMIGRATION LAW: Pursuant to Virginia Code § 2.2-4311.1, in every Contract the following provision applies: the Contractor does not, and shall not

during the performance of the Contract, knowingly employ an unauthorized alien as defined in the federal Immigration Reform and Control Act of 1986.

64. VIRGINIA STATE CORPORATION COMMISSION: Pursuant to Virginia Code § 2.2-4311.2, Any Bidder or Contractor organized as a stock or non-stock corporation, limited liability company, business trust, or limited partnership or registered as a registered limited liability partnership shall be authorized to transact business in the Commonwealth as a domestic or foreign business entity if so required by Title 13.1 or Title 50 of the Code of Virginia, or as otherwise required by law, at the time of the Bid, Proposal or any response to Solicitation and during the term of the Contract and any Contract renewal. The Contractor shall not allow its existence to lapse or its certificate of authority or registration to transact business in the Commonwealth, if so required, to be revoked or cancelled at any time during the term or any renewal of the Contract. If the Contractor fails to remain in compliance with the provisions of this Section 64, the Contract may become void at the option of the County.

65. CLAIMS PROCEDURE:

a. The procedure for consideration by the County of contractual claims for any Contract shall be that set forth in Virginia Code § 15.2-1243, *et seq.*

b. In addition, pursuant to Virginia Code § 2.2-4364, contractual claims, whether for money or other relief, shall be submitted in writing to the County Administrator no later than sixty (60) days after final payment; however, written notice of the Contractor's intention to file such claim shall have been given at the time of the occurrence or beginning of the work upon which the claim is based. Nothing herein shall preclude a Contract from requiring submission of an invoice for final payment within a certain time after completion and acceptance of the work or acceptance of the Goods. Pendency of claims shall not delay payment of amount agreed due in the final payment.

c. No written decision denying a claim or addressing issues related to the claim shall be considered a denial of the claim unless the written decision is signed by the Board or the County Administrator. The contractor may not institute legal action prior to receipt of the final written decision on the claim unless the County fails to render a decision within ninety (90) days of submission of the claim. Failure of the County to render a decision within ninety (90) days shall not result in the contractor being awarded the relief claimed or in any other relief or penalty. The sole remedy for the County's failure to render a decision within 90 days shall be the contractor's right to institute immediate legal action.

d. A Contractor may not institute legal action, prior to receipt of the County's decision on the claim, unless the County fails to render such decision within the time specified by law. A failure by the County to render a decision within the time provided by law shall be deemed a final decision denying the claim by the County.

e. The decision of the Board or the County Administrator shall be final and conclusive unless the Contractor appeals within six (6) months of the date of the final written decision by instituting legal action as provided in Virginia Code § 2.2-4364.

f. No administrative appeals procedure pursuant to Virginia Code § 2.2-4365 has been adopted for contractual claims by the County.

g. Nothing herein shall be construed to prevent the County from instituting legal action against any Contractor or Bidder.

66. NOTICES: All written notices required or permitted under any Solicitation, Bid or Contract shall be deemed sufficient if delivered in person to the County Purchasing Agent or Bidder/Contractor, as applicable, or sent by first class mail to the County or Bidder/Contractor at the addresses set forth in the Solicitation, Bid or Contract or at such other address as a party may designate from time to time by notice given in accordance with the terms of this Section 66; except that where a Solicitation, Bid or Contract expressly requires notice to a specific individual or at a specific location, such shall control. Such notices are deemed received when actually delivered to the party or its representative or agent if hand delivered, or one (1) business day after deposited into the United States mail, if mailed.

DELIVERY

67. SHIPPING INSTRUCTIONS-CONSIGNMENT: Unless otherwise specified in the Solicitation or Contract, as applicable, each case, crate, barrel, package, etc., delivered under the Contract must be plainly stenciled or securely tagged, stating the Contractor's name, purchase order number, and delivery address as indicated in the order. Where shipping containers are to be used, each container must be marked with the purchase order number, name of the Contractor, the name of the item, the item number, and the quantity contained therein. Deliveries must be made within the hours of 8:00 a.m. – 3:00 p.m. Deliveries at any other time will not be accepted unless specific arrangements have been previously made with the designated individual at the delivery point. No deliveries will be accepted on Saturdays, Sundays and holidays unless previous arrangements have been made. It shall be the responsibility of the Contractor to insure compliance with these instructions for items that are drop-shipped.

68. RESPONSIBILITY FOR SUPPLIES TENDERED: The Contractor shall be responsible for the materials or supplies covered by the Contract until they are delivered at the designated point. The Contractor shall additionally bear all risk on rejected materials or supplies after notice of rejection is tendered by the County. Rejected materials or supplies must be removed by and at the expense of the Contractor promptly after notification of rejection, unless public health and safety require immediate destruction or other disposal of rejected delivery. If rejected materials are not removed by the Contractor within ten (10) days after date of notification, the County may return the rejected materials or supplies to the Contractor at the Contractor's risk and expense or dispose of them as abandoned property.

69. **INSPECTIONS:** The County reserves the right to conduct any test/inspection it may deem advisable to assure supplies and Services conform to the specification in the Solicitation, Bid or Contract, as applicable. Inspection and acceptance of materials or supplies will be made after delivery at destinations herein specified unless otherwise stated. Unless otherwise specified in the Contract, if inspection is made after delivery at the destination specified, the County will bear the expense of inspection except for the value of samples used in case of rejection. Final inspection shall be conclusive except in regard to latent defects, fraud or such gross mistakes as to amount to fraud. Final inspection and acceptance or rejection of the materials or supplies will be made as promptly as practicable, but failure to inspect and accept or reject materials or supplies shall not impose liability on the County for such materials or supplies as are not in accordance with the specifications.

70. **COMPLIANCE:** Delivery must be made as ordered and in accordance with the Solicitation, Bid or Contract, as applicable, or as directed by the County when not in conflict with the Bid/Contract. The decision as to reasonable compliance with delivery terms shall be final. Burden of proof of delay in receipt of Goods by the purchaser shall rest with the Contractor. Any request for extension of time of delivery from that specified must be approved by the County, such extension applying only to the particular item or shipment affected. Unless otherwise specified in the Contract, should the Contractor be unreasonably delayed by the County, there shall be added to the time of completion a time equal to the period of such delay caused by the County. However, the Contractor shall not be entitled to claim damages or extra compensation for such delay or suspension. These conditions may vary for construction Contracts.

71. **POINT OF DESTINATION:** All materials shipped to the County must be shipped F.O.B. DESTINATION unless otherwise stated specifically in the Solicitation, Bid or Contract, as applicable. The materials must be delivered to the "Ship To" address indicated on the purchase order or Solicitation, as applicable.

72. **REPLACEMENT:** Materials or components that have been rejected by the County, in accordance with the terms of the Contract, shall be replaced by the Contractor at no cost to the County.

73. **DAMAGES:** Any and all damages to property of the "County" that is the direct result of the Contractor, the employees of the Contractor and/or its subcontractors, agents, licensees, successors, or assigns, shall be the sole responsibility of the Contractor. The property shall be repaired to its last known condition prior to the damages and/or replaced at no cost to the County. The County shall approve any and all repairs/replacements prior to acceptance of the repairs/replacement.

74. **PACKING SLIPS OR DELIVERY TICKETS:** All shipments shall be accompanied by Packing Slips or Delivery Tickets and shall contain the following information for each item delivered:

    a. Purchase Order Number;

b. Name of Article and Stock Number;

c. Quantity Ordered;

d. Quantity Shipped;

e. Quantity Back Ordered; and

f. The Name of the Contractor.

Contractors are cautioned that failure to comply with these conditions shall be considered sufficient reason for refusal to accept the Goods.

75. ADDITIONAL CHARGES: No delivery charges of any kind shall be added to any invoice; except that (i) if Goods are expressly bought F.O.B. "shipping point" under the Contract and the Contractor prepays transportation, then delivery charges shall be added to invoices; and (ii) if express delivery is authorized and substituted by the County on orders for the method specified in the Contract, then the difference between freight or mail and express charges may be added to invoice.

76. METHOD AND CONTAINERS: Unless otherwise specified, Goods shall be delivered in commercial packages in standard commercial containers, so constructed as to ensure acceptance by common or other carrier for safe transportation to the point of delivery. Containers become the property of the County unless otherwise specified by bidder.

Exhibit A2

INSTRUCTION TO BIDDERS

This document is based off of EJCDC C-200 Suggested Instructions to Bidders for Construction Contracts, but is substantially modified.

ARTICLE 1 – DEFINED TERMS

1.01 Terms used in these Instructions to Bidders have the meanings indicated in the General Conditions and Supplementary Conditions. Additional terms used in these Instructions to Bidders have the meanings indicated below:

A. *Issuing Office* – The office from which the Bidding Documents are to be issued and where the bidding procedures are to be administered.

B. *Engineer:*

Dewberry Engineers Inc.
4805 Lake Brook Drive, Suite 200
Glen Allen, VA 23060

C. Issuing Office shall be:

County of Fluvanna
Cyndi Toler, Purchasing Officer
132 Main Street
P.O. Box 540
Palmyra, VA 22963
Ph: (434) 591-1930 ext. 1124
Email: ctoler@fluvannacounty.org

ARTICLE 2 – COPIES OF BIDDING DOCUMENTS

2.01 Complete sets of the Bidding Documents are available on the eVA website and the County of Fluvanna's website at: *https://www.fluvannacounty.org/rfps*.

2.02 Complete sets of Bidding Documents shall be used in preparing Bids; neither Owner nor Engineer assumes any responsibility for errors or misinterpretations resulting from the use of incomplete sets of Bidding Documents.

2.03 Owner and Engineer, in making copies of Bidding Documents available on the above terms, do so only for the purpose of obtaining Bids for the Work and do not authorize or confer a license for any other use.

ARTICLE 3 – QUALIFICATIONS OF BIDDERS

3.01 To demonstrate Bidder's qualifications to perform the Work, Bidder shall submit written evidence such as financial data, previous experience, present commitments, and any other data as indicated in Article 7 of the Bid Form.

3.02 Bidder is advised to carefully review those portions of the Bid Form requiring Bidder's

representations and certifications.

ARTICLE 4 – EXAMINATION OF BIDDING DOCUMENTS, OTHER RELATED DATA, AND SITE

4.01 *Subsurface and Physical Conditions*

A. The Supplementary Conditions identify:

1. Geotechnical Report by Schnabel Engineering, dated March 23, 2017, titled "Geotechnical Engineering Report Wastewater Pump Station, Route 250 and Route 15, Fluvanna County, Virginia" is included in the Appendix of this Project Manual.

2. Geotechnical Report by Schnabel Engineering, dated March 3, 2017, titled "Geotechnical Engineering Report Water Booster Station, Route 250 and Route 15, Fluvanna County, Virginia" is included in the Appendix of this Project Manual.

4.02 *Underground Facilities*

A. Information and data shown or indicated in the Bidding Documents with respect to existing Underground Facilities at or contiguous to the Site is based upon information and data furnished to Owner and Engineer by owners of such Underground Facilities, including Owner, or others.

4.03 *Hazardous Environmental Condition*

A. There are no known reports or drawings to Owner relating to a Hazardous Environmental Condition identified at the Site.

4.04 Provisions concerning responsibilities for the adequacy of data furnished to prospective Bidders with respect to subsurface conditions, other physical conditions, and Underground Facilities, and possible changes in the Bidding Documents due to differing or unanticipated subsurface or physical conditions appear in Paragraphs 4.02, 4.03, and 4.04 of the General Conditions. Provisions concerning responsibilities for the adequacy of data furnished to prospective Bidders with respect to a Hazardous Environmental Condition at the Site, if any, and possible changes in the Contract Documents due to any Hazardous Environmental Condition uncovered or revealed at the Site which was not shown or indicated in the Drawings or Specifications or identified in the Contract Documents to be within the scope of the Work, appear in Paragraph 4.06 of the General Conditions.

4.05 On request, Owner will provide Bidder access to the Site to conduct such examinations, investigations, explorations, tests, and studies as Bidder deems necessary for submission of a Bid. Bidder shall fill all holes and clean up and restore the Site to its former condition upon completion of such explorations, investigations, tests, and studies. Bidder shall comply with all Applicable Laws and Regulations relative to excavation and utility locates.

4.06 A. Reference is made to Article 7 of the Supplementary Conditions for the identification of the general nature of other work that is to be performed at the Site by Owner or others (such as utilities and other prime contractors) that relates to the Work contemplated by these Bidding Documents. On request, Owner will provide to each Bidder for examination access to or copies of contract documents (other than portions thereof related to price) for such other work.

4.07 It is the responsibility of each Bidder before submitting a Bid to:

A. examine and carefully study the Bidding Documents, and the other related data identified in the Bidding Documents;

B. visit the Site and become familiar with and satisfy Bidder as to the general, local, and Site conditions that may affect cost, progress, and performance of the Work;

C. become familiar with and satisfy Bidder as to all federal, state, and local Laws and Regulations that may affect cost, progress, and performance of the Work;

D. carefully study all: (1) reports of explorations and tests of subsurface conditions at or contiguous to the Site and all drawings of physical conditions relating to existing surface or subsurface structures at the Site (except Underground Facilities) that have been identified in Paragraph 4.02 of the Supplementary Conditions as containing reliable "technical data," and (2) reports and drawings of Hazardous Environmental Conditions, if any, at the Site that have been identified in the Paragraph 4.06 of the Supplementary Conditions as containing reliable "technical data";

E. consider the information known to Bidder; information commonly known to contractors doing business in the locality of the Site; information and observations obtained from visits to the Site and the Bidding Documents; with respect to the effect of such information, observations, and documents on (1) the cost, progress, and performance of the Work; (2) the means, methods, techniques, sequences, and procedures of construction to be employed by Bidder, including applying any specific means, methods, techniques, sequences, and procedures of construction expressly required by the Bidding Documents; and (3) Bidder's safety precautions and programs;

F. agree at the time of submitting its Bid that no further examinations, investigations, explorations, tests, studies, or data are necessary for the determination of its Bid for performance of the Work at the price(s) bid and within the times required, and in accordance with the other terms and conditions of the Bidding Documents;

G. become aware of the general nature of the work to be performed by Owner and others at the Site that relates to the Work as indicated in the Bidding Documents;

H. promptly give the County written notice of all conflicts, errors, ambiguities, or discrepancies that Bidder discovers in the Bidding Documents and confirm that the written resolution thereof by the County is acceptable to Bidder; and

I. determine the Bidding Documents are generally sufficient to indicate and convey understanding of all terms and conditions for the performance of the Work.

4.08 The submission of a Bid will constitute an incontrovertible representation by Bidder that Bidder has complied with every requirement of this Article 4, that without exception the Bid is premised upon performing and furnishing the Work required by the Bidding Documents and applying any specific means, methods, techniques, sequences, and procedures of construction that may be shown or indicated or expressly required by the Bidding Documents, that Bidder has given the County written notice of all conflicts, errors, ambiguities, and discrepancies that Bidder has discovered in the Bidding Documents and the written resolutions thereof by the County are acceptable to Bidder,

and that the Bidding Documents are generally sufficient to indicate and convey understanding of all terms and conditions for performing and furnishing the Work.

ARTICLE 5 – PRE-BID CONFERENCE

5.01 A pre-Bid conference will be held at the time and location indicated on the advertisement for bid. Representatives of Owner and Engineer will be present to discuss the Project. Bidders are encouraged to attend and participate in the conference. Engineer will transmit to all prospective Bidders of record such Addenda as Engineer considers necessary in response to questions arising at the conference. Oral statements may not be relied upon and will not be binding or legally effective.

ARTICLE 6 – SITE AND OTHER AREAS

6.01 The Site is identified in the Bidding Documents. Easements for permanent structures or permanent changes in existing facilities are to be obtained and paid for by Owner unless otherwise provided in the Bidding Documents. All additional lands and access thereto required for temporary construction facilities, construction equipment, or storage of materials and equipment to be incorporated in the Work are to be obtained and paid for by Contractor.

ARTICLE 7 – INTERPRETATIONS AND ADDENDA

7.01 All questions about the meaning or intent of the Bidding Documents are to be submitted to the County in writing on. Interpretations or clarifications considered necessary by the County in response to such questions will be issued by Addenda mailed or delivered to all parties recorded by the County as having received the Bidding Documents. Questions received less than ten days prior to the date for opening of Bids may not be answered. Only questions answered by Addenda will be binding. Oral and other interpretations or clarifications will be without legal effect.

7.02 Addenda may be issued to clarify, correct, or change the Bidding Documents as deemed advisable by Owner.

ARTICLE 8 – BID SECURITY

8.01 Pursuant to Virginia Code Section 2.2-4336, a Bid must be accompanied by Bid security in an amount of 5 percent of Bidder's maximum Bid price and in the form of Bid bond insuring the Owner (on the form attached) issued by a surety meeting the requirements of Paragraphs 5.01 and 5.02 of the General Conditions, the County's General Terms and Virginia law.

8.02 The Bid security of the Successful Bidder will be retained until such Bidder has executed the Contract Documents, furnished the required contract security and met the other conditions of the Notice of Award, whereupon the Bid security will be returned. If the Successful Bidder fails to execute and deliver the Contract Documents and furnish the required contract security within 15 days after the Notice of Award, Owner may consider Bidder to be in default, annul the Notice of Award, and the Bid security of that Bidder will be forfeited. Such forfeiture shall be Owner's exclusive remedy if Bidder defaults. The Bid security of other Bidders whom Owner believes to have a reasonable chance of receiving the award may be retained by Owner until the earlier of seven days after the Effective Date of the Agreement or 61 days after the Bid opening, whereupon Bid security furnished by such Bidders will be returned.

8.03 Bid security of other Bidders whom Owner believes do not have a reasonable chance of receiving

the award will be returned within seven days after the Bid opening.

ARTICLE 9 – CONTRACT TIMES

9.01 The number of days within which, or the dates by which, the Work is to be substantially completed and ready for final payment are set forth in the Agreement.

ARTICLE 10 – LIQUIDATED DAMAGES

10.01 Provisions for liquidated damages, if any, are set forth in the Agreement.

ARTICLE 11 – SUBSTITUTE AND "OR-EQUAL" ITEMS

11.01 The Contract, if awarded, will be on the basis of materials and equipment specified or described in the Bidding Documents without consideration of possible substitute or "or-equal" items. Whenever it is specified or described in the Bidding Documents that a substitute or "or-equal" item of material or equipment may be furnished or used by Contractor if acceptable to the Owner, application for such acceptance will not be considered by the Owner until after the Effective Date of the Agreement.

ARTICLE 12 – SUBCONTRACTORS, SUPPLIERS AND OTHERS

12.01 If the Supplementary Conditions require the identity of certain Subcontractors, Suppliers, individuals, or entities to be submitted to Owner in advance of a specified date prior to the Effective Date of the Agreement, the apparent Successful Bidder, and any other Bidder so requested, shall within five days after Bid opening, submit to Owner a list of all such Subcontractors, Suppliers, individuals, or entities proposed for those portions of the Work for which such identification is required. Such list shall be accompanied by an experience statement with pertinent information regarding similar projects and other evidence of qualification for each such Subcontractor, Supplier, individual, or entity if requested by Owner. If Owner, after due investigation, has reasonable objection consistent with the Virginia Public Procurement Act to any proposed Subcontractor, Supplier, individual, or entity, Owner may, before the Notice of Award is given, request apparent Successful Bidder to submit a substitute without an increase in the Bid.

12.02 If apparent Successful Bidder declines to make any such substitution, Owner may award the Contract to the next lowest Bidder that proposes to use acceptable Subcontractors, Suppliers, individuals, or entities so long as such is consistent with the Virginia Public Procurement Act. Declining to make requested substitutions will not constitute grounds for forfeiture of the Bid security of any Bidder. Any Subcontractor, Supplier, individual, or entity so listed and against which Owner or Engineer makes no written objection prior to the giving of the Notice of Award will be deemed acceptable to Owner and Engineer subject to revocation of such acceptance after the Effective Date of the Agreement as provided in Paragraph 6.06 of the General Conditions.

ARTICLE 13 – PREPARATION OF BID

13.01 The Bid Form is included with the Bidding Documents. See the County's General Terms for additional requirements.

13.02 All blanks on the Bid Form shall be completed in ink and the Bid Form signed in ink. Erasures or alterations shall be initialed in ink by the person signing the Bid Form. A Bid price shall be

indicated for each Bid item listed therein. In the case of optional alternatives the words "No Bid," "No Change," or "Not Applicable" may be entered.

13.03 A Bid by a corporation shall be executed in the corporate name by the president or a vice-president or other corporate officer accompanied by evidence of authority to sign. The corporate seal shall be affixed and attested by the secretary or an assistant secretary. The corporate address and state of incorporation shall be shown.

13.04 A Bid by a partnership shall be executed in the partnership name and signed by a partner (whose title must appear under the signature), accompanied by evidence of authority to sign. The official address of the partnership shall be shown.

13.05 A Bid by a limited liability company shall be executed in the name of the firm by a member and accompanied by evidence of authority to sign. The state of formation of the firm and the official address of the firm shall be shown.

13.06 A Bid by an individual shall show the Bidder's name and official address.

13.07 A Bid by a joint venture shall be executed by each joint venturer in the manner indicated on the Bid Form. The official address of the joint venture shall be shown.

13.08 All names shall be printed in ink below the signatures.

13.09 The Bid shall contain an acknowledgment of receipt of all Addenda, the numbers of which shall be filled in on the Bid Form.

13.10 Postal and e-mail addresses and telephone number for communications regarding the Bid shall be shown.

13.11 The Bid shall contain evidence of Bidder's authority and qualification to do business in the state of Virginia, or Bidder shall covenant in writing to obtain such authority and qualification prior to award of the Contract and attach such covenant to the Bid. Bidder's state contractor license number, if any, shall also be shown on the Bid Form.

ARTICLE 14 – BASIS OF BID; COMPARISON OF BIDS

14.01 *Lump Sum*

A. Bidders shall submit a Bid on a lump sum basis as set forth in the Bid Form.

14.02 *Unit Price*

A. Bidders shall submit a Bid on a unit price basis for each item of Work listed in the Bid schedule if any as listed in the Bid Form.

B. The total of all estimated prices will be the sum of the products of the estimated quantity of each item and the corresponding unit price. The final quantities and Contract Price will be determined in accordance with Paragraph 11.03 of the General Conditions.

C. Discrepancies between the multiplication of units of Work and unit prices will be resolved in favor of the method that results in a lower price to the Owner. Discrepancies between the

indicated sum of any column of figures and the correct sum thereof will be resolved in favor of the method that results in a lower price to the Owner.

14.03 *Allowances – Not Applicable*

14.04 *Completion Time Comparisons – Not Applicable*

ARTICLE 15 – SUBMITTAL OF BID

15.01 With each copy of the Bidding Documents, a Bidder is furnished one copy of the Bid Form and the Bid Bond Form. The copy of the Bid Form is to be completed and submitted with the Bid security and the following documents as per Article 7 of the Bid Form.

15.02 A Bid shall be submitted no later than the date and time prescribed and at the place indicated in the advertisement or invitation to bid and shall be enclosed in a plainly marked package with the Project title (and, if applicable, the designated portion of the Project for which the Bid is submitted), the name and address of Bidder, and shall be accompanied by the Bid security and other required documents. If a Bid is sent by mail or other delivery system, the sealed envelope containing the Bid shall be enclosed in a separate package plainly marked on the outside with the notation "BID ENCLOSED." This shall be in addition to any requirements of the County's General Terms.

ARTICLE 16 – MODIFICATION AND WITHDRAWAL OF BID

16.01 See the County's General Terms.

ARTICLE 17 – OPENING OF BIDS

17.01 See the County's General Terms.

ARTICLE 18 – BIDS TO REMAIN SUBJECT TO ACCEPTANCE

18.01 All Bids will remain subject to acceptance for the period of time stated in the Bid Form, but Owner may, in its sole discretion, release any Bid and return the Bid security prior to the end of this period. Also see the County's General Terms.

ARTICLE 19 – EVALUATION OF BIDS AND AWARD OF CONTRACT

19.01 Owner reserves the right to reject any or all Bids, including without limitation, nonconforming, nonresponsive, unbalanced, or conditional Bids. Owner further reserves the right to reject the Bid of any Bidder whom it finds, after reasonable inquiry and evaluation, to not be responsible. Owner may also reject the Bid of any Bidder if Owner believes that it would not be in the best interest of the Project to make an award to that Bidder so long as consistent with applicable law including without limitation the Virginia Public Procurement Act. Owner also reserves the right to waive all informalities not involving price, time, or changes in the Work and to negotiate contract terms with the Successful Bidder.

19.02 More than one Bid for the same Work from an individual or entity under the same or different names will not be considered. Reasonable grounds for believing that any Bidder has an interest in more than one Bid for the Work may be cause for disqualification of that Bidder and the rejection

of all Bids in which that Bidder has an interest.

19.03 In evaluating Bids, Owner will consider whether or not the Bids comply with the prescribed requirements, and such alternates, unit prices and other data, as may be requested in the Bid Form or prior to the Notice of Award.

19.04 In evaluating Bidders, Owner will consider the qualifications of Bidders and may consider the qualifications and experience of Subcontractors, Suppliers, and other individuals or entities proposed for those portions of the Work for which the identity of Subcontractors, Suppliers, and other individuals or entities must be submitted as provided in the Supplementary Conditions.

19.05 Owner may conduct such investigations as Owner deems necessary to establish the responsibility, qualifications, and financial ability of Bidders, proposed Subcontractors, Suppliers, individuals, or entities proposed for those portions of the Work in accordance with the Contract Documents.

19.06 Also see the County's General Terms.

ARTICLE 20 – CONTRACT SECURITY AND INSURANCE

20.01 The County's General Terms and also Article 5 of the General Conditions, as may be modified by the Supplementary Conditions, sets forth Owner's requirements as to performance and payment bonds and insurance. When the Successful Bidder delivers the executed Agreement to Owner, it shall be accompanied by such bonds.

ARTICLE 21 – SIGNING OF AGREEMENT

21.01 When Owner issues a Notice of Award to the Successful Bidder, it shall be accompanied by the required number of unsigned counterparts of the Agreement along with the other Contract Documents which are identified in the Agreement as attached thereto. Within 15 days thereafter, Successful Bidder shall sign and deliver the required number of counterparts of the Agreement and attached documents to Owner. Within ten days thereafter, Owner shall deliver one fully signed counterpart to Successful Bidder with a complete set of the Drawings with appropriate identification.

Exhibit A3

ADDENDUM NO. 1

COMMONWEALTH OF VIRGINIA
DANYLO A. VILLHAUER
Lic. No. 046419
7/3/2018
PROFESSIONAL ENGINEER

TO: All Bid Document Holders

FROM: Dan Villhauer, P.E.

DATE: July 3, 2018

RE: ZION CROSSROADS WATER BOOSTER PUMP STATION AND WASTE WATER PUMP STATION
FLUVANNA COUNTY DEPARTMENT OF PUBLIC WORKS
ITB NO. 2018-05

The following additions, corrections, clarifications and/or changes to the Contract Documents are to be made:

1. ***Change:*** Replace Specification Section Division 00, Invitation for Bid (IFB) #2018-05, First Paragraph in its entirety with the following:
   "All sealed bids shall be turned in no later than 2:00 p.m. EST, August 31, 2018. All bids that are delivered via mail or are hand delivered must be addressed to the "Procurement Contact" listed above. Any Bids that are turned in late will be rejected and returned unopened. Any Bids sent in via facsimile, telephone, or email shall not be considered.
   Bids will be publically opened on August 31, 2018 at 3:00 p.m. EST at Fork Union Community Center, 5725 James Madison Highway, Fork Union VA 23055"

2. ***Change:*** Replace Specification Section Division 00, Agreement, Paragraph 6.02 in its entirety with the following:
   A. In lieu of payment in full at completion and if specifically requested by Contractor in its Bid, Owner shall make progress payments on account of the Contract Price on the basis of Contractor's Applications for Payment after competition of those milestones identified in an attachment to this Agreement and submitted by the Contractor in their Bid ("Schedule of Values"), but such progress payments shall only be up to those limits in Paragraph 6.02.A.1 below. All such payments will be measured by the schedule of values established as provided in Paragraph 2.07.A of the General Conditions. Such payments shall be made in accordance with Section 47 "Payment" of the County's General Terms, defined below in Section IV, and in no event, shall Contractor be paid prior to the completion date of each Schedule of Value on the Project. Contractor shall submit an invoice on the Application for Payment in accordance with Article 14 to the Owner upon completion of each schedule of values item and the Owner shall pay a proper invoice within forty-five days of receipt. Payment in full under for all of the Work will be made after final completion of the work. Contractor shall only submit Applications for Payment in accordance with Article 14 of the General Conditions. Applications for Payment will be processed by Owner as provided in the General Conditions and the County's General Terms.

      1. In no event will progress payments made to the Contractor for Schedule of Value Items exceed either:

a. 95 percent of Work completed (with the balance being retainage). If the character and progress of the Work have not been satisfactory to Owner and Engineer, then additional retainage will apply; and

b. 95 percent of cost of materials and equipment not incorporated in the Work (with the balance being retainage).

c. The above retainage will only be paid to the Contractor upon final completion to the sole satisfaction of the Owner after proper invoice to the Owner consistent with Section 6.01 above.

d. Schedule of Value Items may be identified in a schedule by the Contractor that references dates each Item will be completed within x number of days of the date the Contract Times commerce under the Article 2.03 of the General Conditions.

3. ***Change:*** Replace Specification Section Division 00, Bid Form, Article 2, Section 2.01 in its entirety with the following:
"Bidder accepts all of the terms and conditions of the Instructions to Bidders, including without limitation those dealing with the disposition of Bid security. This Bid will remain subject to acceptance for 90 days after the Bid opening, or for such longer period of time that Bidder may agree to in writing upon request of Owner."

4. ***Change:*** Specification Section Division 00, Invitation for Bid, Appendix I "General Terms, Conditions, and Instruction to Bidders and Contractors" Part 12 replace in its entirety with the following:
"ACCEPTANCE OF BIDS: Unless otherwise specified, all formal Bids or Proposals submitted shall be valid for a minimum period of ninety (90) calendar days following the date established for opening or receipt, respectively, unless extend by mutual agreement of the parties. At the end of the ninety (90) calendar days the Bid/Proposal may be withdrawn at the written request of the Bidder. Thereafter, unless and until the Proposal is withdrawn, it remains in effect until an award is made or the Solicitation is canceled by the County. The County may cancel any Solicitation at any time by notice of such cancelation to the Bidders."

5. Enclosed is the attendance list from the Pre-Bid Conference held on June 27, 2018.

Attachments:

- Pre-Bid Conference – Attendance List

All other parts of the Contract Documents remain unaltered by this Addendum. Bidders must acknowledge receipt of this Addendum on the Bid Form.

END OF ADDENDUM NO. 1

Zion Crossroads Project

Company Name	Representative Name	Email Address	Phone No.	Signature
FL Showalter	Daniel Ingle	dave.ingle@flshowalter.com	434-845-2388	
Concrete Foundations	Tammy Kost	concretefoundation.inc@yahoo.com	434-1656 6592	
Crowder Construction Company	Brian Wade	bwade@crowderusa.com	804-314-0639	
Wood Eqpt. Co.	MIKE BAMBER	mbamber@woodequip.com	540.597.7235	
Caldwell Tanks	Phil Bassett / Rick Smith	basspbo@comcast.net / rsmith@caldwelltanks.com	502-964-3361	
S.J. Louis Construction	Tom Schneider / Josh Bailey	tom5@sjlouis.com / estimators@sjlouis.com	320-253-9291	
Garney Construction	Josh Klaassen	Estimating MAG@Garney.com	540-219-1864	
L.B. Water Services, Inc.	MIKE AUGST	mike.augst@lb1820.com	804-337-8440	
Fortiline Waterworks	Thomas Glenn	thomas.glenn@fortiline.com	540-797-5575	
Walter C. Via	Steven Whittaker	stevenewcvia.com	804-785-2288	
McDermott / CB&I	Paul Catanzaro	paul.catanzaro@mcdermott.com	346 305 1681	
Faulconer Const.	ED STELTSER	estelter@faulconerconstruction.com	434-295-0033	
Sherwood-Logan & Associates	Jon Casarotti	casarotti.j@sherwoodlogan.com	804 560 5410	
T.A. Sheets General Cont	Tammy Church	kent@tasheetsinc.com	757-627-3000	
English Construction	Chase Mourthoff	jclifton@englishconst.com	434-845-0301	
East Coast Utility Contractors	DONALD O'CONNOR	doconnor@ecutility.hrcoxmail.com	757-564-7098	
SMITH MIDLAND	BOB TRUMBETTA	RTRUMBETTA@smithmidland.com	703-927-3344	

Zion Crossroads Project

Company Name	Representative Name	Email Address	Phone No.	Signature
Ferguson Waterworks	Tommy Wagner	Tommy.Wagner@ferguson.com	804-381-2282	
SARGENT CORP.	JIM CIPOLLONE	JCIPOLLONE@SARGENT-CORP.COM	804-368-7118	
Enviroscape Inc	Jim Aldous	JHA14@aol.com	804 737-0490	
Anderson Const. Inc.	Sam Sullivan	W.A.Anderson@andersonconst.com	434-239-4917	
~~Kenneth Smart "Jay"~~ BEE KA Smart	KA Smart	Estimating@bee-llc.com	804-801-7293	
TIDEWATER UTILITY Const. LAURENCE WALLACE	LAURENCE WALLACE	LWALLACE@TUCINCVA.com	757 304 1577	
HAJOCA	JOE SMITH	JOE.SMITH@HAJOCA.com	804-901-0955	
Hajoca	Daniel Ice	Daniel.Ice@Hajoca.com	804-629-4102	
AG Dilland INC	Josh Rector	Josh@AGDilland.com	434-989-0044	
AG Dilland INC	Sheldon Shappett	Sheldon@AGDilland.com	434-977-3750	
AG Dilland INC	John Alexander	John@AGDilland.com	434-977-3750	
Fortiline Waterworks	Rich Leeper	Rich.Leeper@Fortiline.com	919-928-2875	
TIDEWATER UTILITY CONST. INC	Robert Ackley	RAckley@TUCINCVA.COM	804-994-1489	
FAULCONER CONSTRUCTION COMPANY, INC	STEVE MAHONE	SMAHONE@FAULCONERCONSTRUCTION.com	434-295-0033	
FAULCONER CONST. CO. INC.	BRIAN WOLFREY	bwolfrey@faulconerconstruction.com	434-295-0033	
MEB General Contractors, Inc.	DON WADE	DWADE@MEBGC.com	804-551-0598	
MEB General Contractor	Bailey Williams			

Zion Crossroads Project

Company Name	Representative Name	Email Address	Phone No.	Signature
Fielder's Choice Enterprises Inc	David Thornton	estimating@fce-digs.com	434-244-0250	
LANDMARK STRUCTURES	DAVE CHAPMAN	ESTIMATING@TEAMLANDMARK.com	817 439 8388	
FORTILINE WATERWORKS	STEVE RHYNE	STEVE.RHYNE@FORTILINE.com	(540) 743-1990	
JR Caskey	Gerrit Terhune	jrcestimating@jrcaskey.com	804-~~[illegible]~~ 739-8001	
PHOENIX FABRICATORS + ERECTORS	FRANK MASSEY	frankmmassey@phoenixtank.com	317-271-7002	
Mainline Construction	Josh Wright	mainline1991@gmail.com	276 835 9342	
Mainline Construction	Doug Potter	—	—	
PATTERSON CONSTRUCTION	JIM PATTERSON	JPATTERSON.PCC@GMAIL.COM	540-786-5645	
PATTERSON CONSTRUCTION	CORY OAKFORD	COAKFORD.PCC@GMAIL.COM	540-786-5645	

ADDENDUM NO. 2

TO: All Bid Document Holders

FROM: Dan Villhauer, P.E.

DATE: August 24, 2018

RE: ZION CROSSROADS WATER BOOSTER PUMP STATION
AND WASTEWATER PUMP STATION
FLUVANNA COUNTY DEPARTMENT OF PUBLIC WORKS
ITB NO. 2018-05

COMMONWEALTH OF VIRGINIA
DANYLO A. VILLHAUER
Lic. No. 046419
8/24/2018
PROFESSIONAL ENGINEER

The following additions, corrections, clarifications and/or changes to the Contract Documents are to be made:

1. ***Change:*** Replace Specification Section Division 00, Invitation for Bid (IFB) #2018-05, First Paragraph in its entirety with the following:
   "**All sealed bids shall be turned in no later than 2:00 p.m. EST, <u>October 2, 2018</u>.** All bids that are delivered via mail or are hand delivered must be addressed to the "Procurement Contact" listed above. Any Bids that are turned in late will be rejected and returned unopened. Any Bids sent in via facsimile, telephone, or email shall not be considered.
   Bids will be publically opened on <u>October 2, 2018</u> at 3:00 p.m. EST at Fork Union Community Center, 5725 James Madison Highway, Fork Union VA 23055"

2. ***Clarification:*** Specification Section Division 00, Invitation for Bid (IFB) #2018-05, Appendix I, Item 6: In accordance with this section, all questions or comments about the specifications or other Solicitation documents from the Bidder should be submitted to the County no later than seven (7) business days prior to the date set for the opening of the Bids. The bid due date stated in item number 1 of this Addendum would therefore require all questions to be submitted no later than September 21, 2018.

3. ***Change:*** Specification Section Division 00, Invitation for Bid (IFB) #2018-05, Section 1 "General Information", last paragraph. Delete the following in its entirety:
   "Bidders may bid on all of the work on the Station and Site Work for either just the Zion Crossroads Water Booster Station, all of the work on the Station and Site Work for the Zion Crossroads Wastewater Pump Station or all of the work on the Project for both Stations and all associated Site Work. If there is a cost savings associated with doing work on both Stations then such must be clearly identified by the Bidder in its Bid."
   Contractors must bid on the project in its entirety as a whole.

4. ***Change:*** Replace Specification Section Division 00, Invitation for Bid (IFB) #2018-05, Section 6 "Submittal Instructions", A in its entirety with the following:
   A. Each Bidder must submit one (1) original and four (4) copies.

5. ***Clarification:*** All permit fees associated with permits required by Fluvanna County shall be waived. Contractor shall still be responsible for applying for, obtaining, and abiding by the requirements for

each County permit. Contractor shall be responsible for applying for, paying any fees and bonds for, obtaining, and abiding by the requirements for the VDOT Land Use Permit and Performance Bond, as required.

6. ***Clarification:*** The anticipated VDOT Land Use Permit Fee is $270.00. The anticipated VDOT Surety Bond is $20,000.00.

7. ***Clarification:*** Drawings E1.0 and E2.0 – the CT Cabinet will be provided by the power company and the contractor will be responsible for installing.

8. ***Clarification:*** Contractor shall mount the CT cabinet on the outside of the wall of the building, near the door. Final location to be coordinated with Owner, Engineer, and Power Company prior to installation.

9. ***Clarification:*** Drawing E1.0 – the Contractor shall be responsible for providing the Pump Float Control Panel PFCP1.

10. ***Clarification:*** Specification Section 11300, 2.5 A – a motor cooling jacket is required.

11. ***Clarification:*** Drawing C1.0 – a concrete pad is not required for the future bioxide system. Electrical conduits or electrical wiring for the future bioxide system are not required.

12. ***Clarification:*** Specification Section Division 00, Bid Form, Article 5 Basis of Bid, Part B – the intent of Item B is to provide a cost of providing epoxy coating as outlined in Section 09910 Concrete Epoxy Coatings in lieu of a coal tar coating. Item A should include the cost of providing a coal tar coating for the wetwell.

13. ***Clarification:*** Contractor shall provide all piping material as shown on the plans in accordance with piping schedule shown on G2.0. No substitutions to pipe material will be allowed.

14. ***Change:*** Specification Section 16170, 1.3, F, 3, replace in its entirety with the following:
    3. Operate from a supply with a voltage variation of plus 10-percent or minus 15-percent and a frequency variation of plus or minus 2-hertz. The VFD shall be sized, designed and rated as required to operate the specified pump at the voltage/phase noted on the drawings

Attachments:

- None

All other parts of the Contract Documents remain unaltered by this Addendum. Bidders must acknowledge receipt of this Addendum on the Bid Form.

END OF ADDENDUM NO. 2

ADDENDUM NO. 3

TO: **All Bid Document Holders**

FROM: **Dan Villhauer, P.E.**

DATE: **September 26, 2018**

RE: **ZION CROSSROADS WATER BOOSTER PUMP STATION AND WASTEWATER PUMP STATION FLUVANNA COUNTY DEPARTMENT OF PUBLIC WORKS ITB NO. 2018-05**

COMMONWEALTH OF VIRGINIA
DANYLO A. VILLHAUER
Lic. No. 046419
9/26/18
PROFESSIONAL ENGINEER

The following additions, corrections, clarifications and/or changes to the Contract Documents are to be made:

1. ***Change:*** Replace Specification Section Division 00, Invitation for Bid (IFB) #2018-05, First Paragraph in its entirety with the following:
   "All sealed bids shall be turned in no later than 2:00 p.m. EST, <u>October 9, 2018</u>. All bids that are delivered via mail or are hand delivered must be addressed to the "Procurement Contact" listed above. Any Bids that are turned in late will be rejected and returned unopened. Any Bids sent in via facsimile, telephone, or email shall not be considered.
   Bids will be publically opened on <u>October 9, 2018</u> at 3:00 p.m. EST at Fork Union Community Center, 5725 James Madison Highway, Fork Union VA 23055"

2. ***Clarification:*** Specification Section Division 00, Invitation for Bid (IFB) #2018-05, Appendix I, Item 18 "Tax Exemption" means the County is exempt from tax for its direct purchases under V.A.C. 10-210-690 A.

3. ***Change:*** Delete Specification Section Division 00, Invitation for Bid (IFB) #2018-05, Part 4, A, viii in its entirety and replace with the following:
   "Contractor(s) shall warrant replace or repair any defective product, materials, installation or services on the Project for one (1) year from County's final acceptance of any services hereunder, work or services on the Project at no additional cost. County shall be deemed to have accepted services hereunder only after receipt of a proper and detailed invoice from Contractor for all of the work on the Project and payment by the County to Contractor in full on such invoice."

4. ***Change:*** No additional questions will be answered following the issuance of this addendum.

5. ***Clarification:*** Contractor shall assume that the utility transformer/power pole will be located near the Right of Way along Route 250 for the Water Booster Pump Station and Route 15 for the Wastewater Pump Station for bidding purposes.

6. ***Change:*** Delete Specification Section Concrete Epoxy Coatings 09910, 2.3, C,1 and replace with the following:
   1. Manufacturer: Raven Lining Systems, Broken Arrow, Oklahoma 800-324-2810 or 918-6150-140 fax, or approved equal.

7. ***Change:*** Drawing M1.0 – Interior coal tar lining for the wet well base bid item shall be Bitumastic 300M as manufactured by Carboline, or approved equal.

8. ***Change:*** Specification Section Pre-cast Concrete Structures 03400, 2.13 B – Exterior coal tar epoxy shall be Bitumastic 300M as manufactured by Carboline, or approved equal.

9. ***Change:*** Specification Section Sewage Pumps 11300, 2.11 – Alternative impeller design may be approved if sufficient documentation can be provided that they can pass solids, fibrous materials, heavy sludge, and other matter normally found in wastewater.

Attachments:

- None

All other parts of the Contract Documents remain unaltered by this Addendum. Bidders must acknowledge receipt of this Addendum on the Bid Form.

END OF ADDENDUM NO. 3

P:\FLUVANNA\50078863\Construction\Addenda\Addendum No 3\2018.09.26 Addendum No 3 Zion Crossroads WBPS and WWPS.doc

Exhibit B

- ORIGINAL -

SARGENT
CORPORATION

Excellence for Generations.
AN EMPLOYEE OWNED COMPANY

October 2, 2018

Ms. Cyndi Toler, Purchasing Officer
County of Fluvanna, Virginia
132 Main Street
Palmyra, VA 22963

Subject: IFB #2018-05 Zion Crossroads Water Booster Station and Wastewater Pump Station
Fluvanna County, Virginia

Re: Bid Proposal – Cover Letter

Dear Ms. Cyndi Toler:

Sargent Corporation is pleased to submit our bid for IFB #2018-05, Zion Crossroads Water Booster Station and Wastewater Pump Station.

We have reviewed the bid documents and confirm our understanding of the IFB and project requirements. Our qualifications statement is enclosed including work history, resumes, references and other information.

Sargent Corporation was incorporated in 1992 and has been in business since 1926. We construct water / wastewater treatment plants; pump station; water & sewer installation; highway; wind power infrastructure; airport runway, taxiway and apron construction; and commercial and industrial site preparation.

Thank you for the opportunity to bid. Please do not hesitate to contact us with any questions.

Sincerely,

Sargent Corporation

Jim Cipollone
Project Manager

Cc: Estimating File

Main Office
378 Bennoch Road
P.O. Box 435
Stillwater, Maine 04489
Phone: (207) 827-4435
Fax: (207) 827-6150

Bangor Regional Office
489 Odlin Road
Suite 101
Bangor, ME 04401
Phone: (207) 990-1735
Fax: (207) 990-2432

Mid-Atlantic Regional Office
11139 Air Park Road
Suite 1
Ashland, VA 23005
Phone: (804) 368-7118
Fax: (804) 368-7387

Sargent Corporation is an Equal Opportunity, Affirmative Action Employer
Women and Minorities are encouraged to apply

BID FORM

This document is based off of EJCDC C-410 Suggested Bid Form for Construction Contracts, but is modified.

ARTICLE 1 – BID RECIPIENT

1.01 This Bid is submitted to:

Fluvanna County
P.O. Box 540
Fluvanna, VA 22963

1.02 The undersigned Bidder proposes and agrees, if this Bid is accepted, to enter into an Agreement with Owner in the form included in the Bidding Documents to perform all Work as specified or indicated in the Bidding Documents for the prices and within the times indicated in this Bid and in accordance with the other terms and conditions of the Bidding Documents.

ARTICLE 2 – BIDDER'S ACKNOWLEDGEMENTS

2.01 Bidder accepts all of the terms and conditions of the Instructions to Bidders, including without limitation those dealing with the disposition of Bid security. This Bid will remain subject to acceptance for 120 days after the Bid opening, or for such longer period of time that Bidder may agree to in writing upon request of Owner.

ARTICLE 3 – BIDDER'S REPRESENTATIONS

3.01 In submitting this Bid, Bidder represents that:

A. Bidder has examined and carefully studied the Bidding Documents, other related data identified in the Bidding Documents, and the following Addenda, receipt of which is hereby acknowledged:

Addendum No.	Addendum Date
1	May 29, 2018
2	August 24, 2018
3	September 26, 2018

B. Bidder has visited the Site and become familiar with and is satisfied as to the general, local, and Site conditions that may affect cost, progress, and performance of the Work.

C. Bidder is familiar with and is satisfied as to all Laws and Regulations that may affect cost, progress, and performance of the Work.

D. Bidder has carefully studied all: (1) reports of explorations and tests of subsurface conditions, if any, at or contiguous to the Site and all drawings of physical conditions relating to existing surface or subsurface structures at the Site (except Underground Facilities) that have been identified in SC-4.02 as containing reliable "technical data," and (2) reports and drawings of Hazardous Environmental Conditions, if any, at the Site that have been identified in SC-4.06 as containing reliable "technical data."

E. Bidder has considered the information known to Bidder; information commonly known to contractors doing business in the locality of the Site; information and observations obtained from visits to the Site; the Bidding Documents; and the Site-related reports and drawings identified in the Bidding Documents, with respect to the effect of such information, observations, and documents on (1) the cost, progress, and performance of the Work; (2) the means, methods, techniques, sequences, and procedures of construction to be employed by Bidder, including applying the specific means, methods, techniques, sequences, and procedures of construction expressly required by the Bidding Documents; and (3) Bidder's safety precautions and programs.

F. Based on the information and observations referred to in Paragraph 3.01.E above, Bidder does not consider that further examinations, investigations, explorations, tests, studies, or data are necessary for the determination of this Bid for performance of the Work at the price(s) bid and within the times required, and in accordance with the other terms and conditions of the Bidding Documents.

G. Bidder is aware of the general nature of work to be performed by Owner and others at the Site that relates to the Work as indicated in the Bidding Documents.

H. Bidder has given Engineer written notice of all conflicts, errors, ambiguities, or discrepancies that Bidder has discovered in the Bidding Documents, and the written resolution thereof by Engineer is acceptable to Bidder.

1. The Bidding Documents are generally sufficient to indicate and convey understanding of all terms and conditions for the performance of the Work for which this Bid is submitted.

ARTICLE 4 – BIDDER'S CERTIFICATION

4.01 Bidder certifies that:

A. This Bid is genuine and not made in the interest of or on behalf of any undisclosed individual or entity and is not submitted in conformity with any collusive agreement or rules of any group, association, organization, or corporation;

B. Bidder has not directly or indirectly induced or solicited any other Bidder to submit a false or sham Bid;

C. Bidder has not solicited or induced any individual or entity to refrain from bidding; and

D. Bidder has not engaged in corrupt, fraudulent, collusive, or coercive practices in competing for the Contract. For the purposes of this Paragraph 4.01.D:

1. "corrupt practice" means the offering, giving, receiving, or soliciting of any thing of value likely to influence the action of a public official in the bidding process;

2. "fraudulent practice" means an intentional misrepresentation of facts made (a) to influence the bidding process to the detriment of Owner, (b) to establish bid prices at artificial non-competitive levels, or (c) to deprive Owner of the benefits of free and open competition;

3. "collusive practice" means a scheme or arrangement between two or more Bidders, with or without the knowledge of Owner, a purpose of which is to establish bid prices at artificial, non-competitive levels; and

4. "coercive practice" means harming or threatening to harm, directly or indirectly, persons or their property to influence their participation in the bidding process or affect the execution of the Contract.

ARTICLE 5 – BASIS OF BID

5.01 Bidder will complete the Work in accordance with the Contract Documents for the following price(s):

PART A: Lump sum price of construction, complete and in place, and for furnishing and installing all products and equipment including, but not limited to, all site work, piping, concrete, electrical, controls and other associated work, in accordance with the drawings and specifications. The bid price will be based on furnishing equipment and materials in compliance with the specifications. Should the Contractor fail to provide a manufacturer of equipment which complies with the specifications, the Owner reserves the right to select approved specified equipment of his choice without an increase in the contract price. Price in this part is for all work not included in subsequent Parts B, C, and D.

PART A BASE BID:

One Million, Eight Hundred Eighty One Thousand and 00 (in words)

Dollars ($ 1,881,000.00).

PART B – WETWELL CONCRETE EPOXY COATING

Lump sum price for all labor, materials, equipment, and services necessary to complete the installation of corrosion protection for the inside of the Precast Concrete Wetwell. All inside concrete surfaces in the Precast Concrete Wetwell shall be epoxy coated as outlined in Section 09910 Concrete Epoxy Coatings.

PART B BASE BID:

Seventeen Thousand Five Hundred and 00/100 (in words)

Dollars ($ 17,500.00).

PART C - EXCAVATION AND DISPOSAL OF UNSATISFACTORY SOILS

Excavation of unsatisfactory soil material, where authorized or directed, proper disposal off-site of excess material, complete per specifications. (Price per cubic yard) (Final amount shall be adjusted upward or downward based on the actual quantity authorized.):

As provided in Paragraph 11.03 of the General Conditions, estimated quantities are not guaranteed, and determinations of actual quantities and classifications are to be made by Engineer as provided

in Paragraph 9.07 of the General Conditions. Unit prices have been computed as provided in Paragraph 11.03 of the General Conditions.

Estimated quantity of 10 cy @ $ 60.00 per cy = $600.00

PART C BASE BID:

Six Hundred and 00/100 (in words)

Dollars ($ 600.00).

PART D - STRUCTURAL FILL

Placement of, where authorized or directed, structural fill complete per specifications. (Price per cubic yard) (Final amount shall be adjusted upward or downward based on the actual quantity authorized.):

As provided in Paragraph 11.03 of the General Conditions, estimated quantities are not guaranteed, and determinations of actual quantities and classifications are to be made by Engineer as provided in Paragraph 9.07 of the General Conditions. Unit prices have been computed as provided in Paragraph 11.03 of the General Conditions.

Estimated quantity of 10 cy @ $ 90.00 per cy = $900.00

PART D BASE BID:

Nine Hundred and 00/100 (in words)

Dollars ($ 900.00).

TOTAL BASE BID (Parts A, B, C and D Combined)

One million Nine Hundred Thousand and No/100 (in words)

Dollars ($ 1,900,000.00).

ARTICLE 6 – TIME OF COMPLETION

6.01 Bidder agrees that the Work will be substantially complete and will be completed and ready for final payment in accordance with Paragraph 14.07 of the General Conditions on or before the dates or within the number of calendar days indicated in the Agreement.

6.02 Bidder accepts the provisions of the Agreement as to liquidated damages.

ARTICLE 7 – ATTACHMENTS TO THIS BID

7.01 The following documents are submitted with and made a condition of this Bid:

A. Required Bid security in the form of Bid Bond;

B. List of Proposed Subcontractors;

C. List of Proposed Suppliers;

D. List of Project References;

E. Evidence of authority to do business in the state of the Project; or a written covenant to obtain such license within the time for acceptance of Bids;

F. Contractor's License No.: 2705104156

G. Required Bidder Qualification Statement, Section 00330, with supporting data.

ARTICLE 8 – DEFINED TERMS

8.01 The terms used in this Bid with initial capital letters have the meanings stated in the Instructions to Bidders, the General Conditions, and the Supplementary Conditions.

ARTICLE 9 – BID SUBMITTAL

9.01 This Bid is submitted by:

If Bidder is:

An Individual

Name (typed or printed): _____

By: _____
(Individual's signature)

Doing business as: _____

A Partnership

Partnership Name: _____

By: _____
(Signature of general partner -- attach evidence of authority to sign)

Name (typed or printed): _____

A Corporation

Corporation Name: Sargent Corporation
(SEAL)

State of Incorporation: Maine
Type (General Business, Professional, Service, Limited Liability): General Business

By: Tasha A. Gardner
(Signature -- attach evidence of authority to sign)

Name (typed or printed): Tasha A. Gardner

Title: Vice President-Finance/CFO
(CORPORATE SEAL)

Attest Carey L. Sheehan
Carey L. Sheehan, Assistant Secretary

Date of Qualification to do business in VA is 2 / 27 / 06 .

A Joint Venture

Name of Joint Venture: _____

First Joint Venturer Name: _____
(SEAL)

By: _____
(Signature of first joint venture partner -- attach evidence of authority to sign)

Name (typed or printed): _____

Title: _____

Second Joint Venturer Name: _____(SEAL)

By: _____
(Signature of second joint venture partner -- attach evidence of authority to sign)

Name (typed or printed): _____

Title: _____

(Each joint venturer must sign. The manner of signing for each individual, partnership, and corporation that is a party to the joint venture should be in the manner indicated above.)

Bidder's Business Address 378 Bennoch Road, P.O. Box 435

Stillwater, Maine 04489

Phone No. 207-827-4435 Fax No. 207-827-3148

E-mail tfolster@sargent-corp.com

SUBMITTED on October 29, 2018.

State Contractor License No. 2705104156. *[If applicable]*

COUNTY OF FLUVANNA, VIRGINIA
(IFB) #2018-05
Zion Crossroads Water Booster Pump Station and Wastewater Pump Station

ADDENDUM # 1:

Reference – Invitation for Bid:	IFB #2018-05
Title of Request for Proposal:	Zion Crossroads Water Booster Pump Station and Wastewater Pump Station
Issue Date:	May 29, 2018
Bid Due Date and Time:	July 24, 2018 at 2pm

The above IFB #2017-05 is hereby amended and modified as follows:

1. Original Drawing documents contain digital errors making sections difficult to read. This file is a replacement to that file and is incorporated into the Project Manual by reference as material provisions hereof.

Note: A signed acknowledgment of this addendum must be received at the location indicated on the IFB either prior to the bid due date and hour or attached to your bid. Signature on this addendum does not substitute for your signature on the original bid document. The original bid document must be signed.

Very truly yours,

Cyndi Toler, Purchasing Officer
Fluvanna County, Virginia
132 Main Street
Palmyra, VA 22963
(434) 591-1930

Name of Firm: Sargent Corporation

BY: _____
Timothy M. Folster
Signature of duly authorized representative

Title: Vice President-Operations/COO

Date: October 2, 2018

VENDOR DATA SHEET

Note: The following information is required as part of your response to this solicitation. Failure to complete and provide this sheet may result in finding your bid nonresponsive.

1. Qualification: The vendor must have the capability and capacity in all respects to satisfy fully all of the contractual requirements.

2. Vendor's Primary Contact:
Name: Timothy M. Folster, VP-Operations/COO Phone: 207-827-4435

3. Years in Business: Indicate the length of time you have been in business providing this type of good or service: 16 Years 8 Months

4. Vendor Information:
FIN or FEI Number: 01-0470209 If Company, Corporation, or Partnership
SSN: _____ (If Vendor is a sole proprietor)

5. Indicate below a listing of at least four (4) current or recent accounts, either commercial or governmental, that your company is servicing, has serviced, or has provided similar goods. Include the length of service and the name, address, and telephone number of the point of contact.

Company: Olver Associates Inc	Contact: Mandy Olver
Phone: 207-223-2232	Email:
Dates of Service: May 2018 - May 2019	$$ Value: 6,410,000

Company: Waste Management	Contact: Ray McGowan
Phone: 804-561-5787	Email:
Dates of Service: May 2018 - October 2018	$$ Value: 1,329,274

Company: Town of Farmville, VA	Contact: Gerald Spates
Phone: 434-392-5686	Email:
Dates of Service: December 2017 - October 2018	$$ Value: 1,409,419

Company: Prince William County, VA	Contact: William Cleis
Phone: 703-792-6770	Email:
Dates of Service: March 2018 - October 2018	$$ Value: 2,933,553

By my signature below, I, as a duly authorized representative of the entity named below, certify the accuracy of the foregoing information:

Sargent Corporation Date: October 9, 2018
Legal Name of Entity if Applicable

By: Tasha A. Gardner (SEAL) Print Name: Tasha A. Gardner
Signature of Authorized Representative

Print Title: Vice President-Finance/CFO

Vendor Certification (for a Sole Proprietor):

_____ (SEAL) Print Name: _____ Date: _____
Signature

PLEASE RETURN THIS PAGE WITH PROPOSAL SUBMISSION – [REQUIRED]

PROOF OF AUTHORITY TO TRANSACT BUSINESS IN VIRGINIA

THIS FORM MUST BE SUBMITTED WITH YOUR PROPOSAL/BID. FAILURE TO INCLUDE THIS FORM MAY RESULT IN REJECTION OF YOUR PROPOSAL/BID

Pursuant to Virginia Code §2.2-4311.2, an Offeror/Bidder organized or authorized to transact business in The Commonwealth pursuant to Title 13.1 or Title 50 of the Code of Virginia shall include in its proposal/bid the identification number issued to it by the State Corporation Commission ("SCC"). Any Offeror/Bidder that is not required to be authorized to transact business in the Commonwealth as a foreign business entity under Title 13.1 or Title 50 of the Code of Virginia or as otherwise required by law shall include in its proposal/bid a statement describing why the Offeror/Bidder is not required to be so authorized. Any Offeror/Bidder described herein that fails to provide the required information shall not receive an award unless a waiver of this requirement and the administrative policies and procedures established to implement this section is granted by the County Administrator, as applicable. If this quote for goods or services is accepted by the County of Fluvanna, Virginia, the undersigned agrees that the requirements of the Code of Virginia Section 2.2-4311.2 have been met.

Please complete the following by checking the appropriate line that applies and providing the requested information. ***PLEASE NOTE: The SCC number is NOT your federal ID number or business license number.***

A._____ Offeror/Bidder is a Virginia business entity organized and authorized to transact business in Virginia by the SCC and such vendor's Identification Number issued to it by the SCC is _____.

B.__X__ Offeror/Bidder is an out-of-state (foreign) business entity that is authorized to transact business in Virginia by the SCC and such vendor's Identification Number issued to it by the SCC is F165922-8.

C._____ Offeror/Bidder does not have an Identification Number issued to it by the SCC and such vendor is not required to be authorized to transact business in Virginia by the SCC for the following reason(s): **Please attach additional sheets if you need to explain why such Offeror/Bidder is not required to be authorized to transact business in Virginia.**

Legal Name of Company (as listed on W-9): Sargent Corporation
Legal Name of Offeror/Bidder: Sargent Corporation
Date: October 9, 2018
Authorized Signature: Tasha A. Gardner
Print or Type Name and Title: Tasha A. Gardner, Vice President-Finance/CFO

PLEASE RETURN THIS PAGE WITH PROPOSAL SUBMISSION – [REQUIRED]

CERTIFICATE OF NO COLLUSION:

The undersigned, acting on behalf of Sargent Corporation, does hereby certify in connection with the procurement and proposal to which this Certificate of No Collusion is attached that:

This proposal is not the result of, or affected by, any act of collusion with another person engaged in the same line of business or commerce; nor is this proposal the result of, or affected by, any act of fraud punishable under Article 1.1 of Chapter 12 of Title 18.1 of the Code of Virginia, 1950, as amended (18.2-498.1 et seq.).

The undersigned declares that the person or persons signing this proposal is/are fully authorized to sign the proposal on behalf of the firm listed and to fully bind the firm listed to all conditions and provisions thereof.

Respectfully submitted this 9th day of October, 2018

Sargent Corporation
Legal Name of Entity

By: Tasha A. Gardner (SEAL)
Signature of Authorized Representative

Print Name: Tasha A. Gardner

Print Title: Vice President-Finance/CFO

Date: October 9, 2018

ACKNOWLEDGEMENT

State of Maine
In the County/City of Penobscot, **to-wit:**

The foregoing Certification of No Collusion was subscriber and sworn to before me by Tasha A. Gardner (Print Name), Vice President-Finance/CFO (Print Title) on behalf of Sargent Corporation (Print Name of Entity) on this 9th day of October (month), 2018 (year).

KIM A. RYAN
Notary Public * State of Maine
My Commission Expires
November 15, 2021

Kim A. Ryan
Notary Public

My commission expires:

Registration Number: N/A

PLEASE RETURN THIS PAGE WITH PROPOSAL SUBMISSION – [REQUIRED]

OFFEROR STATEMENT

The undersigned Offeror hereby certifies that the Offeror has carefully examined all instructions, plans, conditions, specifications and other documents or items of this Request for Proposal and hereby submits this Proposal pursuant to such instructions, plans, conditions, specifications and other documents or items.

Complete if Offeror is an Entity:

WITNESS the following duly authorized signature and seal:

Name of Entity: Sargent Corporation
By: Tasha A. Gardner (SEAL)
Signature
Print Name: Tasha A. Gardner
Print Title: Vice President-Finance/CFO

STATE OF Maine
COUNTY/CITY OF Penobscot, to-wit:

The foregoing instrument was acknowledged before me this 9th day of October (month), 2018 (year) by Tasha A. Gardner (Print Name), VP-Finance/CFO (Print Title) on behalf of Sargent Corporation (Name of Entity).

KIM A. RYAN Kim A. Ryan [SEAL]
Notary Public * State of Maine
My Commission Expires
November 15, 2021
Notary Public

My commission expires:
Notary registration number: N/A

Complete if Offeror is a Sole Proprietor:
Witness the following signature and seal:

_____ (SEAL)
Signature
Print Name: _____

STATE OF _____
COUNTY/CITY OF _____, to-wit:
The foregoing instrument was acknowledged before me this _____ day of _____ (month), _____ (year) by _____ (Print Name), a sole proprietor.
_____ [SEAL]
Notary Public

My commission expires: _____
Notary registration number: _____

PLEASE RETURN THIS PAGE WITH PROPOSAL SUBMISSION – [REQUIRED]

CONTRACTOR'S QUALIFICATION STATEMENT

All questions must be answered in full. Additional sheets for clarification of answers or additional information may be attached. This statement must be notarized.

1. Name, address, phone number, IRS number of company.
   Sargent Corporation Ph. 207-827-4435
   378 Bennoch, PO Box 435 Tax ID #01-0470209
   Stillwater, Maine 04489
2. Owner, principal officer, date and place organized.
   SC Holdings Inc ESOP
   Herbert R. Sargent, President/CEO
   January 24, 1992 / Maine
3. General character of work performed.
   Wastewater treatment plants, water treatment plants & pump stations, water & sewer installation, landfill cells & closures, highways, wind power infrastructure, airport runway, taxiway and apron construction, commercial & industrial site preparation
4. Any work awarded failed to be completed or contracts defaulted on - where and why.
   None
5. List of three most important recent contracts over $500,000. State the owner, work, approximate cost, place, date started and date completed.

   1. Iberdrola USA Management Corporation $ 5,353,501
      Maine Loop Underground From 11/15 To 8/18
      Transmission Line Civil
      Construction

   2. Newport Sanitary District $ 2,061,906
      Wastewater Treatment Facility Upgrade From 12/16 To 7/18

   3. Town of Boothbay, Maine $ 3,416,836
      Route 27 Corridor Improvements From 4/17 To 6/18
      in the village

6. List the contracts upon which you are currently working. Include owner, location, approximate cost, and estimated date of completion.
See attached list

7. List your major equipment available for use on this project.
See attached list

8. List of three material suppliers and amount of credit available.

1. A H Harris $ Unlimited
2. N H Bragg & Sons $ Unlimited
3. E J Prescott, Inc $ Unlimited

9. Bank references and credit available.

1. Machias Savings Bank $ 12,000,000
2. _____ $

10. Insurance coverage and amount. See attached sample certificate of insurance

Liability-Property:
Liability-Personal Injury:
Vehicle and Equipment:
Other: _____
Identify

11. Bonding reference - List surety and highest coverage.
Travelers Casualty and Surety Company of America
500 Southborough Drive, Suite 107
So. Portland, Maine 04106
$150,000,000/aggregate

12. Subcontractors utilized - List name, address specialty and years experience.

1. Budget Mechanical + Electrical - Palmyra, VA
2. Roof Sytems of Virginia - Richmond, VA
3. Wenrich Painting - Ephrata, PA

13. Provide a general description of the experience of the company and its key personnel. See attached resumes.
Wastewater treatment plants, water treatment plants & pump stations, water & sewer installation, commercial & industrial site preparation, landfill cells & closures, highways, wind power infrastructure, airport runway, taxiway and apron construction

14. Number of current full-time employees 423
Number employed at highest level in past twelve months 454

15. Are you on any list of debarred contractors maintained by the U.S. Department of Labor, U.S. Department of Housing and Urban Development, or Agencies of the Commonwealth of Virginia?

Yes _____ No X

The undersigned hereby authorizes and requests any person, firm or corporation to furnish any information requested by Fluvanna County in verification of the recitals comprising this statement of contractor's qualifications:

Contractor: Sargent Corporation

By: Tasha A. Gardner

Title: Vice President-Finance/CFO

Date: October 9, 2018

SEAL

STATE OF: Maine

COUNTY OF: Penboscot

Tasha A. Gardner being duly sworn deposes and says that he/she is VP-Finance/CFO of Sargent Corporation and that the answers to the foregoing questions and all statements therein contained are true and correct.

SUBSCRIBED AND SWORN TO BEFORE ME THIS 9th DAY OF October, 20 18.

NOTARY PUBLIC Kim A. Ryan

MY COMMISSION EXPIRES

KIM A. RYAN
Notary Public * State of Maine
My Commission Expires
November 15, 2021

CONTRACTOR'S QUALIFICATION STATEMENT

SARGENT
CORPORATION

Excellence for Generations.
AN EMPLOYEE OWNED COMPANY

Certificate of Corporate Vote

I, Tasha A Gardner, of Brewer, Penobscot County, Maine, certify as follows:

1. That I am the duly elected and qualified secretary of SARGENT CORPORATION, a Maine corporation with a principal place of business at Stillwater, Penobscot County, Maine;

2. That by unanimous action of the Board of Directors of SARGENT CORPORATION (the "Corporation"), dated May 18, 2018, the following resolutions were adopted:

RESOLVED: That, as of May 18, 2018, any one of the officers of the Corporation named below, acting singly, be and hereby is authorized to execute and deliver, on behalf of the Corporation, any and all quotes, bids, and contracts arising in the business operations of the Corporation.

President, CEO	Herbert R. Sargent
Vice President-Finance, CFO	Tasha A. Gardner
Vice President-Operations, COO	Timothy M. Folster
Treasurer	Tasha A. Gardner
Secretary	Tasha A. Gardner
Assistant Secretary	Carey L. Sheehan

3. That the foregoing resolutions are in full force and effect.

Dated: May 18, 2018

Tasha A. Gardner

Tasha A. Gardner, Secretary

Main Office
378 Bennoch Road
P.O. Box 435
Stillwater, Maine 04489
Phone: (207) 827-4435
Fax: (207) 827-6150

Bangor Regional Office
489 Odlin Road
Suite 101
Bangor, Maine 04401
Phone: (207) 990-1735
Fax: (207) 990-2432

Mid-Atlantic Regional Office
11139 Air Park Road
Suite 1
Ashland, Virginia 23005
Phone: (804) 368-7118
Fax: (804) 368-7387

New Hamshire Regional Ofice
363 Calef Highway
Epping, New Hampshire 03042
Phone: (603) 734-2132
Fax: (603) 734-2197

Sargent Corporation is an Equal Opportunity, Affirmative Action Employer
Women and Minorities are encouraged to apply

COMMONWEALTH of VIRGINIA

Department of Professional and Occupational Regulation
9960 Mayland Drive, Suite 400, Richmond, VA 23233
Telephone: (804) 367-8500

EXPIRES ON
04-30-2020

NUMBER
2705104156

BOARD FOR CONTRACTORS
CLASS A CONTRACTOR
CLASSIFICATIONS H/H

SARGENT CORPORATION
PO BOX 435
STILLWATER, ME 04489

DPOR

Jay W. DeBoer, Director

Status can be verified at http://www.dpor.virginia.gov

(SEE REVERSE SIDE FOR PRIVILEGES AND INSTRUCTIONS)

DPOR-LIC (02/2017)

(DETACH HERE)

COMMONWEALTH of VIRGINIA
Department of Professional and Occupational Regulation

CLASS A BOARD FOR CONTRACTORS
CONTRACTOR

CLASSIFICATIONS H/H
NUMBER: 2705104156 EXPIRES: 04-30-2020

SARGENT CORPORATION
PO BOX 435
STILLWATER, ME 04489

(FOLD)

Status can be verified at http://www.dpor.virginia.gov

DPOR-PC (02/2017)

SARGENT CORPORATION
378 BENNOCH ROAD
STILLWATER, ME 04489

Current Work on Hand

PROJECT #	PROJECT	Location	CLASS OF WORK	OWNER/GC ADDRESS	CONTACT & PHONE #	ENGINEER ADDRESS	CONTACT & PHONE #	GENERAL/ SUBCONTRACT	SARGENT CORP PROJECT MANAGER	AMOUNT OF CONTRACT	WORK IN PLACE	ESTIMATED COMPL. DATE	TOTAL VALUE OF UNCOMPLETED	PERCENT COMPLETE
17403	Bangor Savings Bank Sitework, Ph. 1	Bangor, ME	Sitework	Bangor Savings Bank/Cianbro Corporation, PO Box 1000, 101 Cianbro Square, Pittsfield, ME 04967	Bruce Cummings			S	Adam Kapaldo	$4,397,807	$3,284,360	31-May-19	$1,113,447	75%
17501	Park Street Retaining Wall Repair and Reconstruction	Bangoor, ME	Sitework	City of Bangor, 73 Harlow Street, Bangor, ME 04401	John Theriault	CES, Inc, P.O. Box 639, 365 South Main Street, Brewer, ME 04412	Travis Noyes	G	Jim Braley	$1,458,478	$1,260,902	27-Oct-18	$197,576	86%
14401	Business Park	Hampden, ME	Sitework	Town of Hampden, 106 Western Ave, Hampden, ME 04444	Angus Jennings			G	Jim Braley	$2,016,632	$1,633,284	29-Sep-18	$383,348	81%
17402	Fiberight Site Development	Hampden, ME	Sitework	Coastal Resources of Maine, LLC, 1450 South Rolling Road, Baltimore, MD 21227				G	Jim Braley	$2,873,917	$1,869,125	27-Oct-18	$1,004,792	65%
16404	Fiberight Site Interim Access Road and Partial Utility Construction - Phase 1	Hampden, ME	Sitework	Municipal Review Committee, Inc, 395 State Street, Ellsworth, ME 04605	Greg Lounder 207-664-1700	CES, Inc, P.O. Box 639, 365 South Main Street, Brewer, ME 04412	Nate Gustafson 207-989-4824	G	Jim Braley	$4,088,597	$3,809,056	29-Sep-18	$279,541	93%
18701	Wastewater Treatment Process Upgrade, Phase 1, Hartland Pollution Control Facility	Hartland, ME	Utility	Town of Hartland, 21 Elm Street, PO Box 280, Hartland, ME 04943	Christopher Littlefield	Olver Associates Inc, 290 Main St, PO Box 679, Winterport, ME 04496	Bill Olver 207-223-2232	G	Jim Cipollone	$6,410,000	$1,306,006	22-May-19	$5,103,994	20%
18301	Cell 11 Expansion Construction at Juniper Ridge Landfill Facility	Old Town, ME	Landfill	NEWSME Operations, 358 Emerson Mill Road, Hampden, ME 04444	Wayne Boyd			G	Adam Kapaldo	$3,876,706	$3,048,580	29-Sep-18	$828,126	79%
28303	#3 Landfill Phase I Reopening	Baileyville, ME	Landfill	Woodland Pulp, LLC, 144 Main Street, Baileyville, ME 04694	Jon Morin 207-427-4007	Sevee & Maher Engineers, Inc, 4 Blanchard Road, PO Box 85A, Cumberland, ME 04021		G	Pete Parizo	$814,566	$0	31-Oct-18	$814,566	0%
28703	Woodland Pulp Effluent Line Replacement - Route 1 Crossing	Baileyville, ME	Utility	Woodland Pulp, LLC, 144 Main Street, Baileyville, ME 04694	Jon Morin 207-427-4007	Wright Pierce Engineers, 11 Bowdoin Island, Suite 140, Topsham, ME 04086		G	Pete Parizo	$997,520	$347,914	31-Oct-18	$649,606	35%
26202	Reconstruction & Traffic Signals in Bar Harbor, Mt. Desert & Somesville	Bar Harbor, ME	Highway	Maine Department of Transportation, 16 State House Station, Augusta, ME 04333	Rhobe Moulton 207-624-3391			G	Travis Fernald	$18,725,466	$14,696,902	30-Dec-18	$4,028,564	78%
17701	Main Street and Poole Street Pump Station Replacement	Calais, ME	Utility	City of Calais, 11 Church Street, Calais, ME 04619	James Porter 207-454-2521	Olver Associates Inc, 290 Main St, PO Box 679, Winterport, ME 04496	Annaleis Hafford 207-223-2232	G	Travis Fernald	$822,178	$530,173	29-Sep-18	$292,005	64%
28302	Temporary Disposal Cell for Lagoon Waste at Dolby Landfill	East Millinocket, ME	Landfill	Sevee & Maher Engineers, Inc, 4 Blanchard Rd, PO Box 85A, Cumberland, ME 04021	Brian Pierce	Sevee & Maher Engineers, Inc, 4 Blanchard Road, PO Box 85A, Cumberland, ME 04021		G	Pete Parizo	$159,175	$92,971	10-Nov-18	$66,204	58%
28702	Secondary WWTF Upgrade	East Millinocket, ME	Utility	Town of East Millinocket/Penta Corporation, 1253 Whittier Highway, PO Box 390, Moultonboro, NH 03254	Bill Ouellette 207-807-1147	Wright Pierce Engineers, 11 Bowdoin Island, Suite 140, Topsham, ME 04086		S	Pete Parizo	$3,359,700	$0	31-Oct-19	$3,359,700	0%
26401	Maine River Trails	Grindstone, ME	Sitework					G	Pete Parizo	$6,000,000	$5,701,948	29-Sep-18	$298,052	95%
28701	Grand Lake Stream Road and Wolf Avenue Pump Stations Replacement	Indian Township, ME	Utility	Passamaquoddy Tribal Government, Route One, PO Box 301, Princeton, ME 04668	William Nicholas Sr	Olver Associates Inc, 290 Main St, PO Box 679, Winterport, ME 04496	Annaleis Hafford 207-223-2232	G	Travis Fernald	$870,918	$509,626	30-Sep-18	$361,292	59%
27402	Brookfield Penstock 3	Millinocket, ME	Sitework					G	Pete Parizo	$1,820,359	$1,173,825	5-Oct-18	$646,534	64%
28102	Airport Ph. 2 - 2018	Owls Head, ME	Airport					G	Travis Fernald	$886,817	$143,319	TBD	$743,498	16%
28101	Extend Runway, Phase II	Rangeley, ME	Airport	Town of Rangeley, 15 School Street, Rangeley, Maine 04970	Rebekah Carmichael Airport Manager	DuBois & King Inc, 14 Sweden St, Suite 203, Caribou, ME 04736	Shane McDougall 207-484-8876	G		$10,219,893	$0	300/CD	$10,219,893	0%
27201	Downtown Infrastructure Improvements - 2017/18	Rumford, ME	Utility	Town of Rumford, 145 Congress Street, Rumford, ME 04276		Main-Land Development Consultants, Inc, 69 Main Street, PO Box Q, Livermore Falls, ME 04254	Richard W. Dunton, PE 207-897-6752	G	Travis Fernald	$5,467,420	$2,165,282	15-Nov-18	$3,302,138	40%
28201	2018 Roadway and Infrastructure Improvements	Southwest Harbor, ME	Highway	Town of Southwest Harbor & Southwest Harbor Water and Sewer District, 26 Village Green Way, PO Box 1100, Southwest Harbor, ME 04679	Don Lagrange, Town Mgr & Steve Kenney, District Mgr	Olver Associates Inc, 290 Main St, PO Box 679, Winterport, ME 04496	Annaleis Hafford 207-223-2232	G	Travis Fernald	$1,891,444	$0	280/CD	$1,891,444	0%
27202	Rte 1 Improvements	Whiting-Edmunds Twp, ME	Highway	Maine Department of Transportation, 16 State House Station, Augusta, ME 04333	Andrew Lathe 207-441-7362			G	Travis Fernald	$12,823,290	$7,225,693	31-Dec-18	$5,597,597	56%
36404	Proctor & Gamble Drop Lot Sitework	Auburn, ME	Sitework	Cianbro Corporation, PO Box 1000, Pittsfield, ME 04967	Ernie Selberg			S	Ian McCarthy	$1,227,047	$1,217,235	1-Jun-18	$9,812	99%
27502	Capital Street Development	Augusta, ME	Sitework	Landry French Construction Company, 160 Pleasant Hill Rd, Scarborough, ME 04074	Jon Sirois 207-730-5566			S	Craig Shorey	$3,146,965	$2,397,186	17-May-19	$749,779	76%
28302	Hatch Hill Landfill Expansion III Intrmediate Cover	Augusta, ME	Landfill	City of Augusta, 16 Cony Street, Augusta, ME 04330-5398	William Bridgeo	Woodard & Curran, 41 Hutchins Drive, Portland, ME 04102	Lauren Swett 800-426-4262	G	Craig Shorey	$870,000	$124,620	19-Oct-18	$745,380	14%

PROJECT #	PROJECT	Location	CLASS OF WORK	OWNER/GC ADDRESS	CONTACT & PHONE #	ENGINEER ADDRESS	CONTACT & PHONE #	GENERAL/ SUBCONTRACT	SARGENT CORP PROJECT MANAGER	AMOUNT OF CONTRACT	WORK IN PLACE	ESTIMATED COMPL. DATE	TOTAL VALUE OF UNCOMPLETED	PERCENT COMPLETE
36201	Route 16 Roadway Reconstruction	Berlin, NH	Highway	City of Berlin, 168 Main Street, Berlin, NH 03570	James Wheeler 603-752-7532	HEB Engineers, Inc, PO Box 440, 2605 White Mountain Highway, North Conway, NH 03860	Jay Poulin, PE, 603-356-6936	G	Ian McCarthy	$6,561,675	$6,388,318	7-Dec-17	$173,357	97%
36403	Brookfield Dam	Gorham, NH	Sitework	Brookfield Renewable Energy Group, New England Operations Center, Great Lakes Hydro America, LLC, 972 Main St. Berlin, NH 03570	Qingwei Fu			G	Ian McCarthy	$4,074,912	$2,932,235	19-Oct-18	$1,142,677	72%
38201	Route 201 Reconstruction	Hallowell, ME	Highway	Maine Department of Transportation, 16 State House Station, Augusta, ME 04333				G	Craig Shorey	$5,719,576	$3,688,268	9-Nov-18	$2,031,308	64%
27501	Elementary School Sitework	Lewiston, ME	Sitework	Lewiston Public Schools, 36 Oak Street, Lewiston, ME 04210	William Webster, Jr	Harriman, 46 Harriman Drive, Auburn, ME 04210	Jeffrey Larimer 207-784-5100	S	Pete Parizo	$9,612,098	$7,852,023	19-May-19	$1,760,075	82%
36402	Retirement Home Sitework	Portland, ME	Sitework	Cobica & Cobica General Contractors, Inc, 2260 McGilchrist St SE, Salem, OR 97302	Larry Kowalchuk	Lenity Architecture Inc, 3150 Kettle Ct SE, Salem, OR 97301		S	Ian McCarthy	$2,708,702	$2,463,575	5-Oct-18	$245,127	91%
38301	Ecomaine Ash Landfill Phase 2 East + A Expansion	Westbrook, ME	Landfill	Ecomaine, 64 Blueberry Road, Portland, ME 04102	Arthur Colvin	CMA Engineers, Inc, Ten Free Street, Portland, ME 04101		G	Ian McCarthy	$2,758,337	$972,215	20-Oct-18	$1,786,122	35%
37403	Wind Farm Sitework	Antrim, NH	Wind	Walden Green Energy/Reed & Reed, Inc, PO Box 370, Woolwich, ME 04579				S	Kevin Burns	$6,140,407	$766,023	30-Aug-19	$5,374,384	12%
37702	State Street Infrastructure Improvements, Contract 1 Of 3, SRF Improvements	Portland, ME	Utility	City of Portland, Dept of Public Works, 389 Congress Street, Portland, ME 04101	Matthew Fitzgerald 207-874-8654			G	Ian McCarthy	$8,343,634	$8,270,044	1-Oct-18	$73,590	99%
58701	Corporate Drive and Goose Bay Drive Sewer Improvements	Portsmouth, NH	Utility	City of Portsmouth, 1 Junkins Ave, Portsmouth, NH 03801		Underwood Engineers, Inc, 25 Vaughan Mall, Portsmouth, NH 03801	Dan Rochette 603-436-6192	G	Doug Morrison	$1,338,632	$1,037,694	29-Jun-19	$300,938	78%
58201	Improvements to Maplewood Avenue & Adjacent Areas	Portsmouth, NH	Highway	City of Portsmouth, 1 Junkins Ave, Portsmouth, NH 03801	603-610-7227	Greenman-Pedersen, Inc	Joseph Johnson 603-766-8245	G	Doug Morrison	$5,897,226	$1,034,808	30-Nov-19	$4,862,418	18%
37501	Foundry Place Parking Garage	Portsmouth, NH	Sitework	Consigli Construction, 15 Franklin St, Portland, ME 04101	Chad Whalen 207-446-3341			S	Adam Kapaldo	$5,447,108	$4,704,664	28-Sep-18	$742,444	86%
57301	TRL-III Landfill Ph. 13 Cell	Rochester, NH	Landfill	Waste Management of NH, Inc, 30 Rochester Neck Road, PO Box 7065, Gonic, NH 03839	Anne Reichert			G	Kevin Burns	$1,106,107	$556,139	8-Nov-18	$549,968	50%
37203	NHDOT Route 12 Reconstruction	Walpole - Charlestown, NH	Highway	New Hampshire Department of Transportation, 7 Hazen Drive, PO Box 483, Concord, NH 03302	Ronald Guyette 603-313-9948			G	Kevin Burns	$14,241,813	$3,703,299	27-Aug-20	$10,538,514	26%
48601	Water Intake Structure	Alta Vista, VA	Utility	Dominion Energy, 104 Wood Lane, AltaVista, VA 24517	Jason Goad 434-369-7805			G	Jim Cipollone	$565,000	$0	31-Dec-18	$565,000	0%
47102	Construct Apron East Side Development - Phase 3, Hanover Airport	Ashland, VA	Airport	County of Hanover, 7496 County Complex Rd, PO Box 470, Hanover, VA 23069-0470	Vivian Doobay 804-365-6104	Delta Airport Consultants, Inc, 9711 Farrar Court, Suite 100, Richmond, VA 23236	John Longnaker 804-275-8301	G	Scott Bartlett	$2,696,062	$2,610,849	23-Dec-17	$85,213	97%
48302	Charles City Landfill 2018 Closure Construction	Charles City, VA	Landfill	Waste Management , 8000 Chambers Rd, Charles City, VA 23030	Ray McGowan 804-561-5787			G	Scott Bartlett	$1,329,274	$894,027	12-Oct-18	$435,247	67%
48401	Essex Solar - Mod 2 Basin 1S & 2SA	Dunnsville, VA	Sitework	Willey Solar, LLC, 311 East Main Street #300, Charlottesville, VA 22902/McCarthy Building Companies, Inc, 6225 North 24th St, Suite 200, Phoenix, AZ 85016	480-449-4700			S	Travis Ridky	$1,031,671	$0	TBD	$1,031,671	0%
47101	Rehabilitate Apron at Farmville Regional Airport	Farmville, VA	Airport	Town of Farmville, 116 N Main Street, Farmville, VA 23901	Gerald Spates 434-392-5686	Delta Airport Consultants, Inc, 9711 Farrar Court, Suite 100, Richmond, VA 23236		G	Scott Bartlett	$1,409,419	$57,982	17-Oct-18	$1,351,437	4%
48102	Construct North GA Apron Site Preparation at Lynchburg Regional Airport	Lynchburg, VA	Airport	City of Lynchburg, Procurement Division, 900 Church Street, Lynchburg, VA 24504	Melissa Tillman 424-455-4228	Delta Airport Consultants, Inc, 9711 Farrar Court, Suite 100, Richmond, VA 23236	Terry Page 804-275-8301	G	Travis Ridky	$567,500	$0	60/CD	$567,500	0%
48301	Prince William Landfill Sequence 4 Cap Construction	Manassas, VA	Landfill	Prince William Board of County Supervisors, 1 County Complex Court, Prince William, VA 22192	William Cleis 703-792-6770	SWS, 11706 Bowman Green Drive, Reston, VA 20190	Fouad Arbid, PE 703-834-0711	G	Travis Ridky	$2,933,553	$2,099,561	31-Oct-18	$833,992	72%
48101	Blue Ridge Regional Aiport Runway 12-30 Pavement Rehabilitation	Martinsville, VA	Airport	Blue Ridge Regional Airport Authority, 525 Airport Road, Martinsville, VA 24112	Jason Davis 276-957-2291	Eden & Associates, 227 W 4th St, Suite 100, Charlotte, NC 28202	Mark McGuire 804-479-0351	G	Travis Ridky	$5,394,575	$0	120/CD	$5,394,575	0%
47104	Construct Terminal Apron & Access Taxiway - Phase I and Terminal Area Site Preparation	Midland, VA	Airport	Fauquier County Government & Public Schools, 320 Hospital Drive, suite 23, Warrenton, VA 20186	Kathy Stanley 540-422-8354	Delta Airport Consultants Inc, 9711 Farrar Court, Suite 100, Richmond, VA 23236	804-275-8301	G	Travis Ridky	$4,317,896	$2,639,873	5-Oct-18	$1,678,023	61%
47305	Camposiella Landfill Air Sparging System	Norfolk, VA	Landfill	City of Norfolk, Dept of Public Works, Rm 700, 7th Flr, City Hall Building, 810 Union St, Norfolk, VA 23510	Rey Hernandez 757-823-4021	SCS Engineers, 2877 Guardian Lane, Suite 1-F, Virginia Beach, VA 23452	Tony Tomlin 757-466-3368	G	Scott Bartlett	$1,064,500	$274,371	11-Dec-18	$790,129	26%
47103	Rehabilitate Apron & Taxilanes at Mecklenburg-Brunswick Regional Airport	South Hill, VA	Airport	Mecklenburg-Brunswick Airport Commission, 1495 Regional Airport Road, Brodnax, VA 23920		Delta Airport Consultants, Inc, PO Box 80036, 1750 E International Blvd, Suite #3, Raleigh, MC 27623	John Borgie, PE	G	Scott Bartlett	$2,992,932	$2,391,949	22-Sep-18	$600,983	80%
	TOTAL WORK ON HAND									$193,477,504	$107,875,924	OK	$85,601,580	

SARGENT CORPORATION
PARTIAL LIST OF AVAILABLE EQUIPMENT

Asset	MODEL	Date In Service
OFF-ROAD ARTICULATED DUMP TRCKS		
8499	CAT 735 TRUCK 20591	5/23/08
8500	CAT 735 TRUCK 20592	5/23/08
8509	CAT 735 TRCUK 20590	5/29/08
8521	CAT 735 TRUCK 20594	7/08/08
8522	CAT 735 TRUCK 20595	7/08/08
8523	CAT 735 TRUCK 20593	7/21/08
8524	CAT 735 TRUCK 20597	8/05/08
8525	CAT 735 TRUCK 20596	8/05/08
8807	2007 VOLVO A35D 23543	8/14/12
8808	2007 VOLVO A35D 23546	8/14/12
8809	2007 VOLVO A35D 23545	8/14/12
8810	2007 VOLVO A35D 23544	8/14/12
BULLDOZERS		
8463	CAT D10R 00002	2/13/08
8561	2009 KOMATSU 09610	3/26/09
8638	CAT D6N LGP DOZER 00625	7/28/09
8665	2009 CAT D6NLGP 00641	12/31/09
8676	2010 KOMATSU D65PX-15EO DOZER 04601	4/30/10
8678	2010 KOMATSU D65OPX DOZER 04602	4/30/10
8772	CAT D-8 DOZER 00848	12/20/11
8851	2013 CAT D6NLGP 00510	4/24/13
8852	2013 CAT D6NLGP 00511	4/24/13
8867	CAT D6LGP DOZER 00509	5/31/13
20089	1971 CAT 814 00601	7/21/05
20090	1972 CAT 814 00602	7/21/05
COMPACTORS		
1008	CAT CS-433B 60401	7/21/05
8340	SD45D SOIL ROLLER 69312	1/06/06
8421	CS-563E CAT SOIL DRUM COMP-60501	7/25/07
8422	CS-563E CAT SOIL DRUM COMP-60502	7/25/07
8429	CAT CP563E COMPACTOR 60597	10/31/07
8575	HAMM 3412 VIBRATORY ROLLER 69569	4/29/09
8576	HAMM 3412 VIBRATORY ROLLER 69570	4/29/09

8580	CAT CP-563E COMPACTOR 60589	2/25/09
8838	2007 CP-323-C VIB PADFOOT 60202	2/25/13
8860	CAT CS56 SOIL COMPACTOR 60533	6/24/13
8866	CAT CP56 COMPACTOR 60536	5/31/13

CRANES

7070	1987 LINKBELT CRANE 41117	7/21/05
7145	P & H 670WLC 41110	7/21/05

CRUSHING & SCREENING PLANTS

306	KOLMAN SCREEN 80103	7/21/05
525	PORTEC 3042 81006	7/21/05
733	GRANSAN 83007	7/21/05
734	GRANSAN 83008	7/21/05
757	GRASAN 80113	7/21/05
935	PEP SCR PLANT 80118	7/21/05
1032	PORTEC 3042 81001	7/21/05
6531	WASH PLANT 80110	7/21/05
7008	NORDBERG 80139	7/21/05
7038	MASTERSCREEN CONQUEROR SCREENING PLANT 80143	7/21/05
7094	NORDBERG CU9 80144	7/21/05
8409	BR550JG-1 MOBILE CRUSHER 81013	4/30/07
8440	JCI CONE PLANT AND KOLBERG C0NVEYORS	12/17/07
8536	2007 USED EXTEC ROBOTRAC SCREEN PLANT 80163	10/24/08
8547	KM MOBILE CRUSHER 81021	12/15/08
8684	6x12 1" BAR GRAVEL SCREEN 80145	6/16/10
8782	JCI TRACK SCREENING PLANT 80171	5/01/12
8795	SHOPBUILT STACKER	6/28/12
8911	B600 BREAKER HAMMER	5/14/14
20137	E&E 83001	7/21/05

DUMP TRUCKS

7066	FREIGHTLINER 29124	7/21/05
8501	2009 MACK 21167	5/29/08
8502	2009 MACK 21168	5/29/08
8563	2010 MACK GU813 TRUCK 21169	4/13/09
8564	2010 MACK GU813 TRUCK 21170	4/13/09
8565	2010 MACK GU813 TRUCK 21171	4/13/09
8703	2006 MACK CT713 21163	7/16/10
8704	2006 MACK CT713 21162	7/16/10
8705	2006 VOLVO VHD64B 23104	7/16/10
8706	2006 VOLVO VHD64B 23105	7/16/10
8784	2007 FREIGHTLINER M2 29131	5/05/12
8785	2007 FREIGHTLINER M2 29132	5/05/12

8786	2007 FREIGHTLINER M2 29133	5/05/12
8787	2007 FREIGHTLINER M2 29134	5/05/12
8788	2007 FREIGHTLINER M2 29135	5/05/12
8840	CAT CT660 TRUCK 20105	4/22/13
8841	CAT CT660 TRUCK 20104	4/22/13
8842	CAT CT660 TRUCK 20103	4/22/13
8843	CAT CT660 TRUCK 20102	4/22/13
8844	CAT CT660 TRUCK 20101	4/22/13
8907	2015 MACK 17' BEAUROC DUMP 21303	5/16/14
8908	2015 MACK 17' BEAUROC DUMP 21301	5/27/14
8909	2015 MACK 17' BEAUROC DUMP 21302	5/30/14

EXCAVATORS

7177	2002 LIEBERR A914 42117	7/21/05
8567	EC210 VOLVO EXCAVATOR 43208	3/31/09
8579	EC160C TRACK EXCAVATOR 43114	4/30/09
8594	CAT 329DL EXCAVATOR 40368	5/28/09
8653	2009 KUBOTA KX080 EXCAVATOR 49051	12/08/09
8664	2009 CAT 336DL EXCAVATOR 40474	12/31/09
8674	2010 KOMATSU PC270LC-8 EXC 44502	4/30/10
8675	2010 KOMATSU PC270LC-8 EXC 44501	4/30/10
8677	2010 KOMATSU PC200LC-8 EXC 44401	4/30/10
8735	2011 DOOSAN DX255 47501	4/06/11
8744	2011 DOOSAN DX255 EXC 47502	4/26/11
8749	2011 CAT 329DL EXC 40602	5/09/11
8754	EC330 CL VOLVO EXC 43703	5/24/11
8765	2011 JD 250G TRACK EXC 48502	9/01/11
8853	2013 CAT 336EL 40704	4/24/13
8883	CAT 324D L EXCAVATOR 40502	9/27/13
8885	CAT 324D L EXCAVATOR 40501	9/27/13

GRADERS

7226	CAT 12H GRADER 30204	7/21/05
8593	CAT 143H GRADER 30207	4/30/09
8682	2001 VOLVO G80A GRADER 33001	5/25/10
8919	2010 CAT 14M GRADER	8/13/14

WHEEL LOADERS

8486	L90F VOLVO WHEEL LOADER 53325	4/23/08
8537	CAT 980H LOADER 50808	10/31/08
8538	KUBOTA LOADER 98019	11/10/08
8577	WA380-6 KOMATSU LOADER 59503	5/06/09
8640	L-90F VOLVO LOADER 53330	8/31/09
8652	VOLVO M2640 L150F 53612	12/08/09

8672	2010 L90F LOADER 53401	3/31/10
8773	T750 BOBCAT TRACK SKID STEER 59042	12/22/11
8822	0845 07 CAT 904B LOADER 50102	12/31/12
8854	2013 VOLVO L90G LOADER 53410	4/18/13
8884	CAT 246C SKID STEER LOADER 50034	9/26/13
8905	VCE L90F WHEEL LOADER	4/08/14

SCRAPERS

8745	1233 K-TEC LEAD SCRAPER 99028	5/13/11
8746	1233 K-TEC G-NECK SCRAPER 99029	5/13/11
8747	1228 K-TEC E-MOVING SCRAPER 99026	5/13/11
8748	1228 K-TEC E-MOVING SCRAPER 99027	5/13/11
8833	2007 VOLVO T450D SCRAPER HAULER 23609	2/07/13
8834	2007 VOLVO T450D SCRAPER HAULER 23610	2/07/13

OTHER EQUIPMENT

HYDRAULIC FUSION MACHINES
LARGE DISC-HARROWS
DE-WATERING EQUIPMENT
TRENCH BOXES
TRENCH LASERS
MISC. TAMPS, PUMPS, ETC.

ACORD®

CERTIFICATE OF LIABILITY INSURANCE

DATE (MM/DD/YYYY): 5/10/2018

THIS CERTIFICATE IS ISSUED AS A MATTER OF INFORMATION ONLY AND CONFERS NO RIGHTS UPON THE CERTIFICATE HOLDER. THIS CERTIFICATE DOES NOT AFFIRMATIVELY OR NEGATIVELY AMEND, EXTEND OR ALTER THE COVERAGE AFFORDED BY THE POLICIES BELOW. THIS CERTIFICATE OF INSURANCE DOES NOT CONSTITUTE A CONTRACT BETWEEN THE ISSUING INSURER(S), AUTHORIZED REPRESENTATIVE OR PRODUCER, AND THE CERTIFICATE HOLDER.

IMPORTANT: If the certificate holder is an ADDITIONAL INSURED, the policy(ies) must be endorsed. If SUBROGATION IS WAIVED, subject to the terms and conditions of the policy, certain policies may require an endorsement. A statement on this certificate does not confer rights to the certificate holder in lieu of such endorsement(s).

PRODUCER
Cross Insurance
491 Main Street
P.O. Box 1388
Bangor ME 04401

CONTACT NAME: Sarah Pierce
PHONE (A/C, No, Ext): (207) 404-5307 FAX (A/C, No): 207-942-4678
E-MAIL ADDRESS: spierce@crossagency.com

INSURER(S) AFFORDING COVERAGE	NAIC #
INSURER A: Liberty Mutual Group	23043
INSURER B: Liberty Mutual Fire Ins Co.	42403
INSURER C: Starr Indemnity & Liability Co	38318
INSURER D: Catlin Insurance Co., Inc.	19518
INSURER E: Construction Services Group	
INSURER F: Acadia	31325

INSURED
Sargent Corporation
P.O. Box 435
Stillwater ME 04489

COVERAGES

CERTIFICATE NUMBER: CL1842747852 REVISION NUMBER:

THIS IS TO CERTIFY THAT THE POLICIES OF INSURANCE LISTED BELOW HAVE BEEN ISSUED TO THE INSURED NAMED ABOVE FOR THE POLICY PERIOD INDICATED. NOTWITHSTANDING ANY REQUIREMENT, TERM OR CONDITION OF ANY CONTRACT OR OTHER DOCUMENT WITH RESPECT TO WHICH THIS CERTIFICATE MAY BE ISSUED OR MAY PERTAIN, THE INSURANCE AFFORDED BY THE POLICIES DESCRIBED HEREIN IS SUBJECT TO ALL THE TERMS, EXCLUSIONS AND CONDITIONS OF SUCH POLICIES. LIMITS SHOWN MAY HAVE BEEN REDUCED BY PAID CLAIMS.

INSR LTR	TYPE OF INSURANCE	ADDL INSD	SUBR WVD	POLICY NUMBER	POLICY EFF (MM/DD/YYYY)	POLICY EXP (MM/DD/YYYY)	LIMITS	
A	X COMMERCIAL GENERAL LIABILITY CLAIMS-MADE / X OCCUR X Contractual liability GEN'L AGGREGATE LIMIT APPLIES PER: X POLICY / X PRO-JECT / X LOC OTHER:			TB7-Z11-260279-078	3/12/2018	3/12/2019	EACH OCCURRENCE DAMAGE TO RENTED PREMISES (Ea occurrence) MED EXP (Any one person) PERSONAL & ADV INJURY GENERAL AGGREGATE PRODUCTS - COMP/OP AGG EBL	$ 1,000,000 $ 100,000 $ 10,000 $ 1,000,000 $ 2,000,000 $ 2,000,000 $ 1,000,000
B	AUTOMOBILE LIABILITY X ANY AUTO ALL OWNED AUTOS / SCHEDULED AUTOS X HIRED AUTOS / X NON-OWNED AUTOS X CA9948 / X Hired Phys			AS2-Z11-260279-028	3/12/2018	3/12/2019	COMBINED SINGLE LIMIT (Ea accident) BODILY INJURY (Per person) BODILY INJURY (Per accident) PROPERTY DAMAGE (Per accident)	$ 1,000,000 $ $ $ $
C	X UMBRELLA LIAB / X OCCUR EXCESS LIAB / CLAIMS-MADE DED / RETENTION $			1000584964181	3/12/2018	3/12/2019	EACH OCCURRENCE AGGREGATE	$ 20,000,000 $ 20,000,000 $
A E	WORKERS COMPENSATION AND EMPLOYERS' LIABILITY ANY PROPRIETOR/PARTNER/EXECUTIVE OFFICER/MEMBER EXCLUDED? (Mandatory in NH) Y/N: N If yes, describe under DESCRIPTION OF OPERATIONS below	N/A		WC7-Z11-260279-018 Out of state WC 500/500/500 WCCSGT2018324	3/12/2018 3/12/2018 1/1/2018	3/12/2019 3/12/2019 1/1/2019	X PER STATUTE / OTH-ER E.L. EACH ACCIDENT E.L. DISEASE - EA EMPLOYEE E.L. DISEASE - POLICY LIMIT	$ 1,000,000 $ 1,000,000 $ 1,000,000
D F	Pollution Liability Leased & Rented Equipment			CEO744683302 CIM 5140539-15	3/12/2018 3/12/2018	3/12/2019 3/12/2019	5,000,000/5,000,000 Limit	$500,000

DESCRIPTION OF OPERATIONS / LOCATIONS / VEHICLES (ACORD 101, Additional Remarks Schedule, may be attached if more space is required)
Refer to policy for exclusionary endorsements and special provisions.

CERTIFICATE HOLDER

Sample Certificate
For Evidence Only
Sargent Corporation
PO Box 435
Stillwater, ME 04489

CANCELLATION

SHOULD ANY OF THE ABOVE DESCRIBED POLICIES BE CANCELLED BEFORE THE EXPIRATION DATE THEREOF, NOTICE WILL BE DELIVERED IN ACCORDANCE WITH THE POLICY PROVISIONS.

AUTHORIZED REPRESENTATIVE
Sarah Pierce/SM9 Sarah Pierce

© 1988-2014 ACORD CORPORATION. All rights reserved.

The ACORD name and logo are registered marks of ACORD

SARGENT
CORPORATION
Excellence for Generations.

JAMES J. CIPOLLONE
PROJECT MANAGER

OVERVIEW & RESPONSIBILITIES

Mr. Cipollone has over 33 years of construction industry experience in design, estimating, operations, planning, scheduling, and project management. His background includes geotechnical construction, water/wastewater plants, heavy civil infrastructure, and other public works projects. Mr. Cipollone was recognized by the U.S. Army Corps of Engineers – Mobile District with a Certificate of Appreciation for his leadership efforts on the Oliver Lock and Dam Replacement.

As a manager directly overseeing projects from beginning to end, responsibilities include: proactively manage schedule, track project milestones, and identify critical activities; draft and submit budgets, change orders, invoicing; subcontract and material procurement, submittal review and delivery, and coordinating resources; communicate with clients, engineers and project team; build, develop and grow any business relationship vital to the success of the project; evaluate and ensure success of all project elements.

PREVIOUS PROJECT EXPERIENCE:

Western Branch WWTP – Upper Marlboro, MD – $66 million contract for the expansion of an existing treatment plant.

Seneca WWTP – Germantown, MD – $26 million contract for the expansion of an existing treatment plant.

Ballenger-McKinney WWTP – Frederick, MD –$104 million contract for construction and expansion of an existing plant that will increase the existing treatment capacity to 15 MGD.

River Rd. Sewage Pumping Station – Henrico, VA –$2.2 million contract for the expansion of an existing pumping station. The work involved deep excavation in rock, soldier piles and lagging excavation support systems, and bypass pumping capable of 23 MGD.

Meredith Branch Sewage Pumping Station – Henrico, VA –$5.8 million contract for construction of a new pump station and demolition of an existing station.

Montebello Plant 2 – Finished Water Reservoir Cover – Baltimore, MD - $37 million contract for the construction of a 32 million gallon covered reinforced concrete water storage reservoir.

Fourmile Creek Trunk Sewer Rehabilitation, Contract 4A – Henrico, VA –$13 million contract involved the installation of 20,100 LF of 48-inch DIP wastewater force main and 19,000 LF of 16 and 24-inch DIP water main.

SARGENT
CORPORATION
Excellence for Generations.

Airport Connector Road – Design/Build – Richmond, VA - $39 million turnkey lump- sum design/build project which consisted of designing, engineering, procuring and constructing an approximately 1.6 mile, four lane toll road to Richmond International Airport.

Project Controls Manager, Vice President and Senior Operations Manager (2001 – 2008) – Fru-Con Construction Corp.

New Design Road Water Treatment Plant – Frederick, MD –$72.9 million contract for plant expansion that will nearly triple the existing treatment capacity from 8.8 to 25 MGD.

Arlington County Water Pollution Control Plant - Phase 7A – Arlington, VA –$131 million contract for plant expansion. The plant has an average flow of approximately 30 MGD and a peak flow capacity in excess of 70 MGD.

Kenneth B. Rollins Water Filtration – Plant Expansion and Upgrade – Leesburg, VA –$16.1 million contract for plant expansion capacity from 10 to 15 MGD.

Broad Run Water Reclamation Facility – Contract 4 – Ashburn, VA - $13.9 million contract for the construction of a new Laboratory building, Maintenance building and Operations building.

Kent Narrows/Stevensville/Grasonville Wastewater Treatment Plant ENR Upgrade – Stevensville, MD - $26.4 million contract for work associated with the expansion and upgrade of an existing wastewater treatment facility and all other appurtenant work.

Arlington County Water Pollution Control Plant – Phase 7D – Arlington, VA –
$19.1 million contract for the construction of a new activated sludge effluent pipeline, chemical feed systems and demolition of existing concrete structures in preparation for new plant facilities.

Broad Run Water Reclamation Facility – Contract 1 Master Site & Liquids Treatment Facility – Ashburn, VA - $85.7 million contract for the construction of new 10 MGD wastewater treatment facility, advertised as the most advanced treatment system in the world for wastewater.

Roanoke WPCP Wet Weather Improvements Project – City of Roanoke, VA - $22 million contract for the construction and installation of a new influent pump station, screening/grit removal facilities, new primary clarifiers, coagulation, feed and chemical facilities, as well as upgrades and modifications to existing equipment.

South Austin WWTP – Train C North Consolidated – City of Austin, TX - $24 million contract for the construction of new lift station and influent flow split, four new secondary clarifiers, new scum pump station, effluent channel between the clarifiers, new chlorine system, modifications to the filter building and new outfall and storm drainage piping systems.

SARGENT
CORPORATION
Excellence for Generations.

Blue Plains WWTP Facilities Upgrade, Phase 2 – District of Columbia Water & Sewer Authority - $34 million contract for the construction of the Secondary Treatment Facilities Upgrade, including the removal and replacement of 96 rectangular clarifier mechanisms.

Eastern Goochland Pump Station Project – County of Goochland, Virginia – $6.5 million contract for construction of a new 33 MGD wastewater pumping.

Wyoming Valley Levee Raising Project, Pump Station Modifications - U.S. Army Corps of Engineers, Baltimore District - $31 million contract to rehabilitate 13 pump stations, including the replacement of 40 pumps, concrete replacement and other incidental work.

Crystal Rock Wastewater Pump Station – Washington Suburban Sanitary Commission, Germantown, MD - $9.4 million contract for the construction of a new pumping station, with a capacity of over 23 MGD.

Massaponax WWTP BNR Upgrade & Expansion – County of Spotsylvania, VA - $28.5 million contract to upgrade existing plant capacity to 8 MGD.

Clifton Forge WWTP Improvements – City of Clifton Forge, VA - $3.4 million contract to upgrade existing facility. Project included two above ground 1.8 mg steel equalization tanks, pump station, sanitary sewer, and mechanical/electrical improvements.

Raw Water Intake/Pump Station – Roanoke River Service Authority, South Hill, VA - $747,000 contract to construct raw water intake pump station in Lake Gaston.

Northeast Fishery Center, Water Treatment Plant – U.S. Fish and Wildlife Service - $911,000 contract to provide a functioning ozone treatment facility.

Shady Grove Water Pump Station & Storage Tanks - Henrico Co., VA. - $2.3 million pump station with two 1.25-million-gallon pre-stressed concrete water tanks and 2,650 feet of 16" water main.

Bristol Quarry Landfill – Bristol, VA - $3.3 million landfill with leachate/groundwater pump station in 320 ft. deep wetwell structure.

Western Branch Pump Station & Raw Water Intake - Suffolk, Virginia - $21 million raw water pumping station and intake structure. The project involved deep foundations, sheet pile cofferdams, trestle construction and piping up to 84 inches.

Duckett Creek Sanitary District Lift Station - O'Fallon, Missouri - $1.8 million sewage pumping station.

U.S. Army Corps of Engineers Miter Gate Replacements, Brandon, Marseilles, and Dresden Locks - Illinois Waterway, Illinois - $12.4 million project involving the simultaneous shutdown of three locks on the Illinois Waterway System. Approximately 90% of the work was completed during a 60-day shutdown.

SARGENT
CORPORATION
Excellence for Generations.

EDUCATION

BS - Civil and Environmental Engineering; University of Cincinnati
Course work towards MS - Civil/Geotechnical Engineering; University of Cincinnati

SYSTEMS EXPERIENCE

Primavera
Microsoft Office Software
HCSS Estimating System
CMiC Enterprise Software

SARGENT
CORPORATION
Excellence for Generations.

JUSTIN PORTER
OPERATIONS MANAGER

OVERVIEW & RESPONSIBILITIES

Mr. Porter has over 10 years of construction industry experience. Prior to his role as Mid Atlantic Regional Manager, he spent time as a foreman, site superintendent and project manager on projects ranging from landfill construction, airport construction, commercial sitework and residential construction.

Mr. Porter works collaboratively with the project superintendent and project manager on a daily basis, planning, strategizing and ensuring the project is staffed adequately and with the most current equipment and technology out there in today's market. He will follow through with this project until final project closeout.

PREVIOUS PROJECT EXPERIENCE:

Environmental

Old Beulah Landfill Closure Cap Construction – Hurlock, MD – Project Manager for 45 acre landfill cap. Scope included geocomposite drainage layer, synthetic geomembrane, drilling & installation of 28 EA landfill gas vents, 24,000 CY waste excavation & relocation; 66,000 CY Intermediate cover soil; 155,000 CY final cover soil. Project was completed in January 2016.

Shenandoah Landfill Cell 3 – Edinburg, VA – Project Manager for constructing approx. 6 acre landfill cell. Scope included 275,000 SF of geosynthetic liner system; 18,000 CY rock excavation; 3,500 LF leachate collection pipe; 2,200 CY waste excavation; 20,000 CY clay liner; 18,000 TN of protective cover stone; 24,000 SY rain cover; electrical; pump equipment. Project was completed in December 2015.

Republic Services Brunswick Waste Management Facility 2015 Infrastructure Construction – Lawrenceville, VA – Project Manager for infrastructure project that included 200 LF of 36" RCP, 60" drop inlets, 60 LF cast in place dual box culvert, new pond outlet structures and mucking out existing sediment basins. Project was completed in May 2015.

Waste Management Middle Peninsula Cell 11 – Glenns, VA – Project Manager for 7.8 acre landfill cell. Scope included 37,700 CY of earthwork; 25,200 CY of clay placement; 14,800 CY of protective cover; 1,100 LF of leachate piping; 1,300 LF of odor control piping; 1,250 LF of haul road; cast-in-place box culvert & inlet; pump house construction.

Waste Management Cameron Gas Modifications – King George, VA – Project Manager for landfill gas project. Scope of work was to reconfigure existing 24" & 30" HDPE and stainless steel fittings to improve the performance of gas system. Project was completed in August 2013.

Glatfelter Spring Grove Facility Zone 1&2 Closure – Spring Grove, PA – Project Manager for 2 landfill caps that total approximately 30 acres. Scope included 30 acres of surface prep,

SARGENT
CORPORATION
Excellence for Generations.

JUSTIN PORTER
OPERATIONS MANAGER
continued

20,000 CY of waste excavation, geomembrane & geocomposite installation, 94,000 CY of borrow placement, erosion controls & channel linings. Project was completed in June 2013.

Bear Island Landfill Cell – Ashland, VA – Project Manager for 4 acre landfill cell. Scope of work included 117,000 CY of earthwork, 16,670 SY of liner work, 12" drainage layer, 8" protective cover layer; 500 LF of 8" HDPE leachate collection pipe, 1,055 SY of concrete channel. Project completed in March 2013.

Waste Management Pine Grove Landfill 2011 Final Cover System – Pine Grove, PA – Project Manager for a 21 acre final landfill cap completed in 3 months. Scope included 21 acres of surface prep, liner system and final cover placement; 5,000 LF of new and relocation LFG piping; 5,680 LF of landfill bench sock drain; maintained operation of existing LFG system during operations; 550 LF of gabion lined channels; 8,300 LF of erosion mat lined channels; 22 acres of borrow reclamation; 265 VF of LFH wells. Project began in July 2011 and completed in October 2011.

Buncombe County, North Carolina – Landfill Gas Wells, Piping & Asbestos Monitoring – Pipe Foreman for project requiring installation of landfill gas wells and piping systems as part of the overall gas to energy facility construction. Scope of work included: drilling twenty-five (25) gas wells totaling 1,241 VF, 5,800 LF of gas collection pipe, 560 LF of surface collection piping, asbestos monitoring & abatement, modifications to thirteen (13) existing LFG wellhead assemblies, installation of twenty-five (25) new LFG wellheads. Project was completed in November 2010.

Frederick County Maryland – Reichs Ford Sanitary Landfill – Frederick, MD – Pipe Foreman for project which included 28 gas well collection system and power island site preparation. The work consisted of drilling an average depth of 40' per well and installing 28 ea gas wells with associated piping, 3 ea condensate traps, 9,400' of HDPE landfill perimeter header and lateral pipe, 1,500' of HDPE conveyance pipe, 1,500' of HDPE condensate pipe, 1,500' of stainless steel compressed air pipe, 2 ea knock-out-tanks, and site preparation for power island area with associated concrete equipment foundations. The project started in December 2009 and was completed in March 2010.

Cecil County, Maryland – Phase II LFG Collection & Conveyance System – Foreman on fast-track LFG pipeline project which include construction of six new landfill gas wells and relocating the existing header line. Sargent crews were responsible for 6 gas wells drilled to a depth of 287 feet; 2 horizontal landfill gas collection lines; 3,240 feet of 4-Inch to 6-Inch HDPE; relocating 750 feet of 24-Inch header pipe.

Charles County Maryland – Charles County Landfill; LaPlata, Maryland – Foreman for 8-acre double lined landfill, including supervision of LFG well installation. The work consisted of 213,000 cy of common excavation to stockpile, 15,500 cy of common excavation to fill berms, 3,800' of HDPE underdrain, 25,800 cy of 24-inch thick clay liner, 350,000 sf of liner system,

SARGENT
CORPORATION
Excellence for Generations.

JUSTIN PORTER
OPERATIONS MANAGER
continued

5,400' of HDPE leachate stone, and 9 leachate recharge well/gas vents. The project started in July 2007 and was completed in February 2008.

Prince George's County Maryland – Brown Station Road Landfill; Upper Marlboro, Maryland – Foreman for excavation and stone placement on 24 acre double lined landfill. The work consisted of 200,000 cy of common borrow, 90,000 cy of low-perm clay hauled in from off-site, 1,012,000 sf of 60 mil liner, 1,882,000 sf of 16 oz. Geotextile, 120,000 tn of leachate collection aggregate, and 10,000 lf of HDPE leachate collection pipe. The project started in May 2007 and finished ahead of schedule in February 2008.

Mecklenburg County Landfill Final Closure – South Boston, Virginia – Foreman for a 14 acre compacted soil cap closure. The project consists of building a pond on an adjacent farm to harvest the clay, regarding the existing slopes, place 36,000 cy of low permeability clay, 12,000 cy for the vegetative soil layer, 7,000 lf of storm water diversion berms, and 850 vf of landfill gas vents. The project started on September 2008 completed in December 2008.

Site Work

Vulcan Materials Pipe Replacement Project – Skippers, VA – Project Manager for a pipe replacement project. Scope of work included 30,000 CY Pipe Excavation & backfill, installation of 2,123 LF 63" HDPE Pipe, sliplining 884 LF of 63" HDPE Pipe through existing 72" pipe, pumping 170 CY grout into annular space for sliplined pipe. Project was completed in April 2014.

Fordson Place – Alexandria, VA – Project Manager for a 3 acre commercial development. Scope of work included 500 LF of waterline (6" to 24" size), 3,000 CY of undercut, 8,500 CY of borrow placement, 1,000 LF of storm drainage, ADS Bay Filter and StormTech underground storm water detention system. Project was completed in November 2013.

Waste Management – King George Convenience Center – Project Manager for a 3 acre Waste Disposal and Recycling Center. Project scope included clearing 3 acres, septic tank and drain field installation, water well installation, Stormwater Management Basin, four (4) compactor units, and two (2) 40'x130'x8" concrete compactor pads. The project started in May 2012 and completed in July 2012.

Wal-Mart Stores – Princess Anne, Maryland – Early Grading & Storm Water Compliance for Future Distribution Center - SWPPP Superintendent and Grade Foreman for Pre-grading for future distribution center. Project scope included bush-hogging 20 acres, approx. 23,000 CY of excavation to fill, and approx. 7,500 LF of chain link fence with barbed wire.
Wal-Mart Stores – Middletown, Delaware – Trench Drain – Project Superintendent for construction of trench drain and associated activities. Project was completed in April 2010.

SARGENT
CORPORATION
Excellence for Generations.

JUSTIN PORTER
OPERATIONS MANAGER
continued

Wal-Mart Stores – Bedford, Pennsylvania – Project Superintendent. Work included two (2) projects for erosion storm water channel repair, truck entrance concrete/asphalt replacement, and storm water compliance for existing distribution center. Project was completed in January 2010.

Wal-Mart Stores – Sterling, Virginia – Sam's Club Fueling Station – SWPPP Superintendent and Construction Foreman. Scope of work included clearing and stripping topsoil; storm drain system including installation of 28'X70' underground detention system with 8" thick concrete slab, 6.5'X110' sand filter device, and 285 LF of 15" RCP; water and sewer utilities; site grading, subgrade prep, placement of stone and gravel; site concrete including sidewalk, curb, tank pad, canopy pad; hoe-ram excavation for underground tanks; fuel system construction including three (3) 20,000 gallon underground tanks, fiberglass vapor recovery piping, triple wall flex pipe, six (6) fuel dispensers; site and fuel system electrical; kiosk building construction.

Road

VDOT Staffordboro Commuter Parking Lot Expansion – Staffordboro, Virginia – Project Manager for 1,000 additional parking spaces at existing commuter lot. Scope of work included 11 AC clearing & grubbing, 57,000 CY onsite excavation, 45,000 CY borrow excavation, stormdrain, waterline, sanitary sewer, asphalt pavement, site concrete, electrical, and landscaping. The project also included coordination with Virginia Center for Transportation Innovation & Research (VCTIR) for the placement of 3,000 CY of Roller Compacted Concrete. This was the first project that VDOT used RCC pavement and Sargent Corporation helped to outline the means & methods for RCC placement procedures. Project was completed in October 2014.

VDOT D65 Culvert Replacements – Northumberland, Virginia – Project Manager for VDOT project which includes removal of existing culverts and installation of 78" CMP and headwalls. Project was awarded in December 2010 and was completed in September 2011.

Airport

Manassas Regional Airport Taxiway D – Manassas, Virginia – Project Manager for taxiway project. Scope of work included 19,000 CY unclassified excavation; 8,600 SY cement treated subgrade; 7,500 SY cement-treated base course; 2,000 TN of P209 asphalt paving; 667 LF 42" RCP; rock excavation for storm drain; oil / water separator; pavement markings; airfield electrical and signage; seeding & erosion controls. Project was completed in September 2015.

Manassas Regional Airport RW34R Bridge Extension – Manassas, Virginia – Site Superintendent & Project Manager for runway & taxiway bridge extension project. Scope of work included demo of existing structure, excavation of footers and installation of 11,450 SF of MSE Walls within active stream, 268 LF bridge abutments, 67 EA 50'x4'x3' Prestressed

SARGENT
CORPORATION
Excellence for Generations.

JUSTIN PORTER
OPERATIONS MANAGER
continued

Concrete Box Beams 3,200 tons CL 2-3 riprap placed within stream, 1,100 SY concrete slope pavement and electrical relocation. Project took place during the night so runway could remain active during the daytime. Project was completed in December 2014.

Manassas Regional Airport Rehabilitate & Relocate Taxiway K – Manassas, Virginia – Project Manager for taxiway relocation. Scope of work included demolition of existing taxiway, 10,000 CY of excavation, 15,000 CY of borrow placement, 1,750 SY concrete open grid pavers, storm drainage, 3,500 GAL oil water separator, 8,200 SY of cement treated base course, 8,200 SY of bituminous surface course. Project was complete in July 2015.

Manassas Regional Airport RW34R Extension Package 1 – Manassas, Virginia – Project Manager for runway extension project. Scope of work included 45,000 CY of excavation, 115,000 CY of borrow placement, 4,000 LF of concrete-lined V-ditch, 200' x 400' paved blast pad, 30,000 CY of topsoil, 20,000 SY of sod, 65 acres of seed & mulch, 14,500 SY of cement treated base course, storm drainage, runway electrical, fencing, erosion controls, land clearing. Phase 1-4 completed in November 2012; Phase 5 was completed in June 2013.

EDUCATION:

B.A. – University of Southern Maine – May 2006.

PROFESSIONAL REGISTRATIONS / GROUPS / TRAINING:
SWANA Old Dominion Chapter
FMI Emerging Managers Institute – December 2014
HAZWOPER 8 Hour Training Refresher Course – July 2011
HAZWOPER 40 Hour Training & Asbestos Awareness – July 2010
Landfill Safety Training – 8 Hour Class – June 2010
VDOT Work Zone Traffic Control – June 2010
First Aid / CPR – June 2010
GPS Survey Data Training – June 2010
OSHA 30 Hour Training – April 2007
DNREC Erosion Control Certification
Virginia RLD Certification - Current
Maryland Sediment & Erosion Control Certification - Current
Wal-Mart Stormwater Compliance Training – 6 Hour Class – July 2010

COMPUTER SYSTEMS:
HCSS Heavy Job
HCSS Heavy Bid
Microsoft Project
Excel 2010 & Other Microsoft Office

PENAL SUM FORM

BID BOND

Any singular reference to Bidder, Surety, Owner or other party shall be considered plural where applicable.

BIDDER *(Name and Address)*:
SARGENT CORPORATION
378 BENNOCH ROAD PO BOX 435
STILLWATER, ME 04489

SURETY *(Name and Address of Principal Place of Business)*:
TRAVELERS CASUALTY AND SURETY COMPANY OF AMERICA
500 SOUTHBOROUGH DRIVE, SUITE 107
SOUTH PORTLAND, ME 04106

OWNER
COUNTY OF FLUVANNA
132 MAIN STREET PO BOX 540
PALMYRA, VA 22963

BID
Bid Due Date: OCTOBER 9, 2018
Description: ZION CROSSROADS WATER BOOSTER STATION AND WASTEWATER PUMP STATION FLUVANNA COUNTY, VA. IFB# 2018-05

BOND
Bond Number: SARGENT576
Date *(Not earlier than Bid due date)*: OCTOBER 9, 2018
Penal sum FIVE PERCENT OF ATTACHED BID (Words) $ *5%* (Figures)

Surety and Bidder, intending to be legally bound hereby, subject to the terms set forth below, do each cause this Bid Bond to be duly executed by an authorized officer, agent, or representative.

BIDDER	**SURETY**
SARGENT CORPORATION (Seal)	TRAVELERS CASUALTY AND SURETY COMPANY OF AMERICA (Seal)
Bidder's Name and Corporate Seal	Surety's Name and Corporate Seal
By: Tasha A. Gardner	By: Nancy L. Castonguay
Signature	Signature (Attach Power of Attorney)
TASHA A. GARDNER	NANCY L. CASTONGUAY
Print Name	Print Name
VICE PRESIDENT-FINANCE/CFO	
Title	Title
Attest: Carey Shuster	~~Attest~~: WITNESS: Trina Elsman
Signature	Signature
ASSISTANT SECRETARY	
Title	Title

Note: Above addresses are to be used for giving any required notice. Provide execution by any additional parties, such as joint venturers, if necessary.

PENAL SUM FORM

1. Bidder and Surety, jointly and severally, bind themselves, their heirs, executors, administrators, successors, and assigns to pay to Owner upon default of Bidder the penal sum set forth on the face of this Bond. Payment of the penal sum is the extent of Bidder's and Surety's liability. Recovery of such penal sum under the terms of this Bond shall be Owner's sole and exclusive remedy upon default of Bidder.

2. Default of Bidder shall occur upon the failure of Bidder to deliver within the time required by the Bidding Documents (or any extension thereof agreed to in writing by Owner) the executed Agreement required by the Bidding Documents and any performance and payment bonds required by the Bidding Documents.

3. This obligation shall be null and void if:

3.1 Owner accepts Bidder's Bid and Bidder delivers within the time required by the Bidding Documents (or any extension thereof agreed to in writing by Owner) the executed Agreement required by the Bidding Documents and any performance and payment bonds required by the Bidding Documents, or

3.2 All Bids are rejected by Owner, or

3.3 Owner fails to issue a Notice of Award to Bidder within the time specified in the Bidding Documents (or any extension thereof agreed to in writing by Bidder and, if applicable, consented to by Surety when required by Paragraph 5 hereof).

4. Payment under this Bond will be due and payable upon default of Bidder and within 30 calendar days after receipt by Bidder and Surety of written notice of default from Owner, which notice will be given with reasonable promptness, identifying this Bond and the Project and including a statement of the amount due.

5. Surety waives notice of any and all defenses based on or arising out of any time extension to issue Notice of Award agreed to in writing by Owner and Bidder, provided that the total time for issuing Notice of Award including extensions shall not in the aggregate exceed 120 days from Bid due date without Surety's written consent.

6. No suit or action shall be commenced under this Bond prior to 30 calendar days after the notice of default required in Paragraph 4 above is received by Bidder and Surety and in no case later than one year after Bid due date.

7. Any suit or action under this Bond shall be commenced only in a court of competent jurisdiction located in the state in which the Project is located.

8. Notices required hereunder shall be in writing and sent to Bidder and Surety at their respective addresses shown on the face of this Bond. Such notices may be sent by personal delivery, commercial courier, or by United States Registered or Certified Mail, return receipt requested, postage pre-paid, and shall be deemed to be effective upon receipt by the party concerned.

9. Surety shall cause to be attached to this Bond a current and effective Power of Attorney evidencing the authority of the officer, agent, or representative who executed this Bond on behalf of Surety to execute, seal, and deliver such Bond and bind the Surety thereby.

10. This Bond is intended to conform to all applicable statutory requirements. Any applicable requirement of any applicable statute that has been omitted from this Bond shall be deemed to be included herein as if set forth at length. If any provision of this Bond conflicts with any applicable statute, then the provision of said statute shall govern and the remainder of this Bond that is not in conflict therewith shall continue in full force and effect.

11. The term "Bid" as used herein includes a Bid, offer, or proposal as applicable.

TRAVELERS	Travelers Casualty and Surety Company of America Travelers Casualty and Surety Company St. Paul Fire and Marine Insurance Company

POWER OF ATTORNEY

KNOW ALL MEN BY THESE PRESENTS: That Travelers Casualty and Surety Company of America, Travelers Casualty and Surety Company, and St. Paul Fire and Marine Insurance Company are corporations duly organized under the laws of the State of Connecticut (herein collectively called the "Companies"), and that the Companies do hereby make, constitute and appoint **Nancy L. Castonguay**, of **Lewiston, Maine**, their true and lawful Attorney-in-Fact to sign, execute, seal and acknowledge any and all bonds, recognizances, conditional undertakings and other writings obligatory in the nature thereof on behalf of the Companies in their business of guaranteeing the fidelity of persons, guaranteeing the performance of contracts and executing or guaranteeing bonds and undertakings required or permitted in any actions or proceedings allowed by law.

IN WITNESS WHEREOF, the Companies have caused this instrument to be signed, and their corporate seals to be hereto affixed, this **3rd** day of **February, 2017.**

State of Connecticut

City of Hartford ss.

By: _____
Robert L. Raney, Senior Vice President

On this the **3rd** day of **February, 2017**, before me personally appeared **Robert L. Raney**, who acknowledged himself to be the Senior Vice President of Travelers Casualty and Surety Company of America, Travelers Casualty and Surety Company, and St. Paul Fire and Marine Insurance Company, and that he, as such, being authorized so to do, executed the foregoing instrument for the purposes therein contained by signing on behalf of the corporations by himself as a duly authorized officer.

In Witness Whereof, I hereunto set my hand and official seal.

My Commission expires the **30th** day of **June, 2021**

Marie C Tetreault
Marie C. Tetreault, Notary Public

This Power of Attorney is granted under and by the authority of the following resolutions adopted by the Boards of Directors of Travelers Casualty and Surety Company of America, Travelers Casualty and Surety Company, and St. Paul Fire and Marine Insurance Company, which resolutions are now in full force and effect, reading as follows:

RESOLVED, that the Chairman, the President, any Vice Chairman, any Executive Vice President, any Senior Vice President, any Vice President, any Second Vice President, the Treasurer, any Assistant Treasurer, the Corporate Secretary or any Assistant Secretary may appoint Attorneys-in-Fact and Agents to act for and on behalf of the Company and may give such appointee such authority as his or her certificate of authority may prescribe to sign with the Company's name and seal with the Company's seal bonds, recognizances, contracts of indemnity, and other writings obligatory in the nature of a bond, recognizance, or conditional undertaking, and any of said officers or the Board of Directors at any time may remove any such appointee and revoke the power given him or her; and it is

FURTHER RESOLVED, that the Chairman, the President, any Vice Chairman, any Executive Vice President, any Senior Vice President or any Vice President may delegate all or any part of the foregoing authority to one or more officers or employees of this Company, provided that each such delegation is in writing and a copy thereof is filed in the office of the Secretary; and it is

FURTHER RESOLVED, that any bond, recognizance, contract of indemnity, or writing obligatory in the nature of a bond, recognizance, or conditional undertaking shall be valid and binding upon the Company when (a) signed by the President, any Vice Chairman, any Executive Vice President, any Senior Vice President or any Vice President, any Second Vice President, the Treasurer, any Assistant Treasurer, the Corporate Secretary or any Assistant Secretary and duly attested and sealed with the Company's seal by a Secretary or Assistant Secretary; or (b) duly executed (under seal, if required) by one or more Attorneys-in-Fact and Agents pursuant to the power prescribed in his or her certificate or their certificates of authority or by one or more Company officers pursuant to a written delegation of authority; and it is

FURTHER RESOLVED, that the signature of each of the following officers: President, any Executive Vice President, any Senior Vice President, any Vice President, any Assistant Vice President, any Secretary, any Assistant Secretary, and the seal of the Company may be affixed by facsimile to any Power of Attorney or to any certificate relating thereto appointing Resident Vice Presidents, Resident Assistant Secretaries or Attorneys-in-Fact for purposes only of executing and attesting bonds and undertakings and other writings obligatory in the nature thereof, and any such Power of Attorney or certificate bearing such facsimile signature or facsimile seal shall be valid and binding upon the Company and any such power so executed and certified by such facsimile signature and facsimile seal shall be valid and binding on the Company in the future with respect to any bond or understanding to which it is attached.

I, **Kevin E. Hughes**, the undersigned, Assistant Secretary of Travelers Casualty and Surety Company of America, Travelers Casualty and Surety Company, and St. Paul Fire and Marine Insurance Company, do hereby certify that the above and foregoing is a true and correct copy of the Power of Attorney executed by said Companies, which remains in full force and effect.

Dated this 9TH day of OCTOBER, 2018

Kevin E. Hughes, Assistant Secretary

To verify the authenticity of this Power of Attorney, please call us at 1-800-421-3880.
Please refer to the above-named Attorney-in-Fact and the details of the bond to which the power is attached.

Exhibit C

Notice to Proceed

Date: _____

Project: Zion Crossroads Water Booster Station and Wastewater Pump Station	
Owner: Fluvanna County	Owner's Contract No.:
Contract:	Engineer's Project No.: 50078863 & 50078864
Contractor:	
Contractor's Address: *[send Certified Mail, Return Receipt Requested]*	

You are notified that the Contract Times under the above Contract will commence to run on _____. On or before that date, you are to start performing your obligations under the Contract Documents. In accordance with Article 4 of the Agreement, the number of days to achieve Substantial Completion is 360 for Phase 1 and 540 for Phase 2, and the number of days to achieve readiness for final payment for Phase 1 and Phase 2 is 600.

Before you may start any Work at the Site, Paragraph 2.01.B of the General Conditions provides that you and Owner must each deliver to the other (with copies to Engineer and other identified additional insureds and loss payees) certificates of insurance which each is required to purchase and maintain in accordance with the Contract Documents.

Owner: Fluvanna County

Given by: Steven M. Nichols

Authorized Signature

Title: County Administrator

Date

Copy to Engineer

Exhibit D

STANDARD PERFORMANCE BOND FOR CONSTRUCTION CONTRACTS

KNOW ALL MEN BY THESE PRESENT:

That , _____the Contractor ("Principal") whose principal place of business is located at _____ and _____ ("Surety") are held and firmly bound unto the County of Fluvanna, Virginia, the Owner ("Obligee") in the amount of Dollars ($ _____), for the payment whereof Principal and Surety bind themselves, their heirs, executors, administrators, successors and assigns, jointly and severally, firmly by these presents.

WHEREAS, Principal has by written agreement dated the ___ day of _____, 20__ entered into a contract with Obligee for which contract (the "Contract") is by reference expressly made a part hereof;

NOW THEREFORE, THE CONDITION OF THIS OBLIGATION is such that, if the Principal shall promptly and faithfully perform said Contract in strict conformity with the plans, specifications and conditions of the Contract, then this obligation shall be null and void; otherwise it shall remain in full force and effect.

Provided, that any alterations which may be made in the terms of the Contract, or in the Work to be done under it, or the giving by the Obligee of any extension of the time for the performance of the Contract, or any other alterations, extensions or forbearance on the part of either or both of the Obligee or the Principal to the other shall not in any way release the Principal and the Surety, or either of them, their heirs, executors, administrators, successors or assigns from their liability hereunder, notice to the Surety of any such alterations, extension, or forbearance being hereby waived.

No action shall be brought on this bond unless brought within one year after: (a) completion of the Contract and all Work thereunder, including expiration of all warranties and guarantees, or (b) discovery of the defect or breach of warranty or guarantee if the action be for such. The Surety represents to the Principal and to the Obligee that it is legally authorized to do business in the Commonwealth of Virginia. Exclusive venue and jurisdiction for any dispute arising hereunder shall be in the courts of the County of Fluvanna, Virginia.

Signed and sealed this ___ day of _____, 20__ .

Principal

By:_____

Title:_____

Date:_____

Surety (must be signed by a Virginia Resident Agent of Surety)

By:_____

Title:_____

Date:_____

Address: _____

_____

Bond No.: _____

Approved as to form:

_____

Fluvanna County Attorney

Exhibit E

STANDARD LABOR AND MATERIAL PAYMENT BOND

KNOW ALL MEN BY THESE PRESENT:

That , _____the Contractor ("Principal") whose principal place of business is located at _____ and _____ ("Surety") are held and firmly bound unto the County of Fluvanna, Virginia, the Owner ("Obligee") in the amount of Dollars ($ _____), for the payment whereof Principal and Surety bind themselves, their heirs, executors, administrators, successors and assigns, jointly and severally, firmly by these presents.

WHEREAS, Principal has by written agreement dated the ___ day of _____, 20__ entered into a contract with Obligee for which contract (the "Contract") is by reference expressly made a part hereof;

NOW THEREFORE, THE CONDITION OF THIS OBLIGATION is such that, if the Principal shall promptly make payment to all claimants as hereinafter defined, for labor performed and material furnished in the prosecution of the Work provided for in the Contract, then this obligation shall be void; otherwise it shall remain in full force and effect, subject, however, to the following conditions.

The Principal and Surety, jointly and severally, hereby agree with Obligee as follows:

1. A claimant is defined as one having a direct contract with the Principal or with a subcontractor of the Principal for labor, material, or both for use in the performance of the Contract. A "subcontractor" of the Principal, for the purposes of this bond only, includes not only those subcontractors having a direct contractual relationship with the Principal, but also any other contractor who undertakes to participate in the Work which the Principal is to perform under the aforesaid Contract, whether there are one or more intervening subcontractors contractually positioned between it and the Principal (for example, a subcontractor). "Labor" and "material" shall include, but not be limited to, public utility services and reasonable rentals of equipment, but only for periods when the equipment rented is actually used at the work site.

2. Subject to the provisions of paragraph 3, any claimant who has performed labor or furnished material in accordance with the Contract documents in the prosecution of the Work provided in the Contract, who has not been paid in full therefor before the expiration of ninety (90) days after the day on which such claimant performed the last of such labor or furnished the last of such materials for which he claims payment, may bring an action on this bond to recover any amount due him for such labor or material, and may prosecute such action to final judgment and have execution on the judgment. The Obligee need not be a party to such action and shall not be liable for the payment of any costs, fees or expenses of any such suit.

3. Any claimant who has a direct contractual relationship with any subcontractor of the Principal from whom the Principal has not required a subcontractor payment bond, but who has no contractual relationship, express or implied, with the Principal, may bring an action on this bond only if he has given written notice to the Principal within one hundred eighty (180) days from the day on which the claimant performed the last of the labor or furnished the last of the materials

STANDARD LABOR AND MATERIAL PAYMENT BOND

for which he claims payment, stating with substantial accuracy the amount claimed and the name of the person for whom the Work was performed or to whom the material was furnished. Notice to the Principal shall be served by registered or certified mail, postage prepaid, in an envelope addressed to the Principal at any place where his office is regularly maintained for the transaction of business. Claims for sums withheld as retainages with respect to labor performed or materials furnished shall not be subject to the time limitations stated in this paragraph 3.

4. No suit or action shall be commenced hereunder by any claimant;

a. Unless brought within one year after the day on which the person bringing such action last performed labor or last furnished or supplied materials, it being understood, however, that if any limitation embodied in this bond is prohibited by any law controlling the construction hereof, the limitation embodied within this bond shall be deemed to be amended so as to be equal to the minimum period of limitation permitted by such law.

b. Other than in a Virginia court of competent jurisdiction and parties agree that exclusive venue and jurisdiction for any dispute arising hereunder shall be in the courts of the County of Fluvanna, Virginia.

5. The amount of this bond shall be reduced by and to the extent of any payment or payments made in good faith hereunder.

Signed and sealed this ___ day of _____, 20__ .

Principal

By:_____

Title:_____

Date:_____

Surety (must be signed by a Virginia Resident Agent of Surety)

By:_____

Title:_____

Date:_____

Address: _____

_____

Bond No.: _____

Approved as to form:

_____

Fluvanna County Attorney

Exhibit F

SECTION C-700
GENERAL CONDITIONS

This is based off of EJCDC C-700 Standard General Conditions of the Construction Contract, but has been substantially modified.

ARTICLE 1 – DEFINITIONS AND TERMINOLOGY

1.01 *Defined Terms*

A. All terms defined in the Invitation for Bids shall have the meaning set forth therein and wherever used in the Bidding Requirements or Contract Documents and printed with initial capital letters, the terms listed below will have the meanings indicated which are applicable to both the singular and plural thereof. In addition to terms specifically defined, terms with initial capital letters in the Contract Documents include references to identified articles and paragraphs, and the titles of other documents or forms.

1. *Addenda*—Written or graphic instruments issued prior to the opening of Bids which clarify, correct, or change the Bidding Requirements or the proposed Contract Documents.

2. *Agreement*—The written instrument which is evidence of the agreement between Owner and Contractor covering the Work.

3. *Application for Payment*—The form acceptable to Owner which is to be used by Contractor during the course of the Work in requesting progress or final payments and which is to be accompanied by such supporting documentation as is required by the Contract Documents.

4. *Asbestos*—Any material that contains more than one percent asbestos and is friable or is releasing asbestos fibers into the air above current action levels established by the United States Occupational Safety and Health Administration.

5. *Bid*—The offer or proposal of a Bidder submitted on the prescribed form setting forth the prices for the Work to be performed including any and all exhibits, addenda or attachments thereto.

6. *Bidder*—The individual or entity who submits a Bid directly to Owner.

7. *Bidding Documents*—The Bidding Requirements and the proposed Contract Documents (including all Addenda).

8. *Bidding Requirements*—The advertisement or invitation to bid, Instructions to Bidders, Bid security of acceptable form, if any, and the Bid Form with any supplements; and any and all Addenda, exhibits, or attachments thereto.

9. *Change Order*—A document recommended by Engineer which is signed by Contractor and Owner and authorizes an addition, deletion, or revision in the Work or an adjustment in the Contract Price or the Contract Times, issued on or after the Effective Date of the Agreement.

10. *Claim*—A demand or assertion by Owner or Contractor seeking an adjustment of Contract Price or Contract Times, or both, or other relief with respect to the terms of the Contract. A demand for money or services by a third party is not a Claim.

11. *Contract*—The entire and integrated written agreement between the Owner and Contractor concerning the Work including any and all Bidding Requirements and all Contract Documents. The Contract supersedes prior negotiations, representations, or agreements, whether written or oral.

12. *Contract Documents*—Those items so designated in the Agreement.. Approved Shop Drawings, other Contractor submittals, and the reports and drawings of subsurface and physical conditions are not Contract Documents unless done so by a written amendment to the Agreement signed by Owner and Contractor.

13. *Contract Price*—The moneys payable by Owner to Contractor for completion of the Work in accordance with the Contract Documents as stated in the Agreement (subject to the provisions of Paragraph 11.03 in the case of Unit Price Work).

14. *Contract Times*—The number of days or the dates stated in the Agreement to: (i) achieve Milestones, if any; (ii) achieve Substantial Completion; and (iii) complete the Work so that it is ready for final payment as evidenced by Engineer's written recommendation of final payment.

15. *Contractor*—The individual or entity with whom Owner has entered into the Agreement.

16. *Cost of the Work*—See Paragraph 11.01 for definition.

17. *Drawings*—That part of the Contract Documents prepared or approved by Engineer which graphically shows the scope, extent, and character of the Work to be performed by Contractor. Shop Drawings and other Contractor submittals are not Drawings as so defined.

18. *Effective Date of the Agreement*—The date indicated in the Agreement on which it becomes effective, but if no such date is indicated, it means the date on which the Agreement is signed and delivered by the last of the two parties to sign and deliver.

19. *Engineer*—The individual or entity named as such in the Agreement.

20. *Field Order*—A written order issued by Engineer which requires minor changes in the Work but which does not involve a change in the Contract Price or the Contract Times.

21. *General Requirements—these General Conditions, the Supplementary Conditions, the County's General Terms and* Sections of Division 1 of the Specifications.

22. *Hazardous Environmental Condition*—The presence at the Site of Asbestos, PCBs, Petroleum, Hazardous Waste, or Radioactive Material in such quantities or circumstances that may present a substantial danger to persons or property exposed thereto.

23. *Hazardous Waste*—The term Hazardous Waste shall have the meaning provided in Section 1004 of the Solid Waste Disposal Act (42 USC Section 6903) as amended from time to time.

24. *Laws and Regulations; Laws or Regulations*—Any and all applicable laws, rules, regulations, ordinances, codes, and orders of any and all governmental bodies, agencies, authorities, and courts having jurisdiction.

25. *Liens*—Charges, security interests, or encumbrances upon Project funds, real property, or personal property.

26. *Milestone*—A principal event specified in the Contract Documents relating to an intermediate completion date or time prior to Substantial Completion of all the Work. Milestones that trigger a partial payment of the Contract Price must be identified by the Contractor in the Bid and defined with specificity.

27. *Notice of Award*—The written notice by Owner to the Successful Bidder stating that upon timely compliance by the Successful Bidder with the conditions precedent listed therein, Owner will sign and deliver the Agreement.

28. *Notice to Proceed*—A written notice given by Owner to Contractor fixing the date on which the Contract Times will commence to run and on which Contractor shall start to perform the Work under the Contract Documents.

29. *Owner*—The individual or entity with whom Contractor has entered into the Agreement and for whom the Work is to be performed.

30. *PCBs*—Polychlorinated biphenyls.

31. *Petroleum*—Petroleum, including crude oil or any fraction thereof which is liquid at standard conditions of temperature and pressure (60 degrees Fahrenheit and 14.7 pounds per square inch absolute), such as oil, petroleum, fuel oil, oil sludge, oil refuse, gasoline, kerosene, and oil mixed with other non-Hazardous Waste and crude oils.

32. *Progress Schedule*—A schedule, prepared and maintained by Contractor, describing the sequence and duration of the activities comprising the Contractor's plan to accomplish the Work within the Contract Times and identifying all Milestones, if any.

33. *Project*—The total construction of which the Work to be performed under the Contract Documents may be the whole, or a part.

34. *Project Manual*—The bound documentary information prepared for bidding and constructing the Work. A listing of the contents of the Project Manual, which may be bound in one or more volumes, is contained in the table(s) of contents.

35. *Radioactive Material*—Source, special nuclear, or byproduct material as defined by the Atomic Energy Act of 1954 (42 USC Section 2011 et seq.) as amended from time to time.

36. *Resident Project Representative*—The authorized representative of the Owner, being Wayne Stephens, Director of Public works and an authorized representative Engineer who may be assigned to the Site or any part thereof.

37. *Samples*—Physical examples of materials, equipment, or workmanship that are representative of some portion of the Work and which establish the standards by which such portion of the Work will be judged.

38. *Schedule of Submittals*—A schedule, prepared and maintained by Contractor, of required submittals and the time requirements to support scheduled performance of related construction activities.

39. *Schedule of Values*—A schedule, prepared and maintained by Contractor, allocating portions of the Contract Price to various portions of the Work identified as Milestones and used as the basis for reviewing Contractor's Applications for Payment, progress payments shall only be made if specifically requested in the Bid and if consistent with the Agreement.

40. *Shop Drawings*—All drawings, diagrams, illustrations, schedules, and other data or information which are specifically prepared or assembled by or for Contractor and submitted by Contractor to illustrate some portion of the Work.

41. *Site*—Lands or areas indicated in the Contract Documents as being furnished by Owner upon which the Work is to be performed, including rights-of-way and easements for access thereto, and such other lands furnished by Owner which are designated for the use of Contractor.

42. *Specifications*—Any and all parts of the Contract Documents (and any and all attachments, exhibits or addenda thereto) consisting of plans, specifications, written requirements for materials, equipment, systems, standards and workmanship as applied to the Work, and certain administrative requirements and procedural matters applicable thereto.

43. *Subcontractor*—An individual or entity having a direct contract with Contractor or with any other Subcontractor for the performance of a part of the Work at the Site.

44. *Substantial Completion*—The time at which the Work (or a specified part thereof) has progressed to the point where, in the opinion of Engineer and Owner, the Work (or a specified part thereof) is sufficiently complete, in accordance with the Contract Documents, so that the Work (or a specified part thereof) can be utilized for the purposes for which it is intended. The terms "substantially complete" and "substantially completed" as applied to all or part of the Work refer to Substantial Completion thereof.

45. *Successful Bidder*—The Bidder submitting a responsive Bid to whom Owner makes an award.

46. *Supplementary Conditions*—That part of the Contract Documents which amends or supplements these General Conditions.

47. *Supplier*—A manufacturer, fabricator, supplier, distributor, materialman, or vendor having a direct contract with Contractor or with any Subcontractor to furnish materials or equipment to be incorporated in the Work by Contractor or Subcontractor.

48. *Underground Facilities*—All underground pipelines, conduits, ducts, cables, wires, manholes, vaults, tanks, tunnels, or other such facilities or attachments, and any encasements containing such facilities, including those that convey electricity, gases, steam, liquid petroleum products, telephone or other communications, cable television, water, wastewater, storm water, other liquids or chemicals, or traffic or other control systems.

49. *Unit Price Work*—Work to be paid for on the basis of unit prices.

50. *Work*—The entire construction or the various separately identifiable parts thereof required to be provided under the Contract Documents. Work includes and is the result of performing or providing all labor, services, and documentation necessary to produce such construction, and furnishing, installing, and incorporating all materials and equipment into such construction, all as required by the Contract Documents.

51. *Work Change Directive*—A written statement to Contractor issued on or after the Effective Date of the Agreement and signed by Owner and recommended by Engineer ordering an addition, deletion, or revision in the Work, or responding to differing or unforeseen subsurface or physical conditions under which the Work is to be performed or to emergencies. A Work Change Directive will not change the Contract Price or the Contract Times but is evidence that the parties expect that the change ordered or documented by a Work Change Directive will be incorporated in a subsequently issued Change Order following negotiations by the parties as to its effect, if any, on the Contract Price or Contract Times.

52. *Final Completion*- The time at which all of the Work on the Project is fully and finally complete to the sole satisfaction of the Owner.

1.02 *Terminology*

A. The words and terms discussed in Paragraph 1.02.B through F are not defined but, when used in the Bidding Requirements or Contract Documents, have the indicated meaning.

B. *Intent of Certain Terms or Adjectives:*

1. The Contract Documents include the terms "as allowed," "as approved," "as ordered," "as directed" or terms of like effect or import to authorize an exercise of professional judgment by Engineer. In addition, the adjectives "reasonable," "suitable," "acceptable," "proper," "satisfactory," or adjectives of like effect or import are used to describe an action or determination of Engineer as to the Work. It is intended that such exercise of professional judgment, action, or determination will be solely to evaluate, in general, the Work for compliance with the information in the Contract Documents and with the design concept of the Project as a functioning whole as shown or indicated in the Contract Documents (unless there is a specific statement indicating otherwise). The use of any such term or adjective is not intended to and shall not be effective to assign to Engineer any duty or authority to supervise or direct the performance of the Work, or any duty or authority to

undertake responsibility contrary to the provisions of Paragraph 9.09 or any other provision of the Contract Documents.

C. *Day:*

1. The word "day" means a calendar day of 24 hours measured from midnight to the next midnight.

D. *Defective:*

1. The word "defective," when modifying the word "Work," refers to Work that is unsatisfactory, faulty, or deficient in that it:

   a. does not conform to the Contract Documents; or

   b. does not meet the requirements of any applicable inspection, reference standard, test, or approval referred to in the Contract Documents; or

   c. has been damaged prior to Engineer's recommendation of final payment (unless responsibility for the protection thereof has been assumed by Owner at Substantial Completion in accordance with Paragraph 14.04 or 14.05).

E. *Furnish, Install, Perform, Provide:*

1. The word "furnish," when used in connection with services, materials, or equipment, shall mean to supply and deliver said services, materials, or equipment to the Site (or some other specified location) ready for use or installation and in usable or operable condition.

2. The word "install," when used in connection with services, materials, or equipment, shall mean to put into use or place in final position said services, materials, or equipment complete and ready for intended use.

3. The words "perform" or "provide," when used in connection with services, materials, or equipment, shall mean to furnish and install said services, materials, or equipment complete and ready for intended use.

4. When "furnish," "install," "perform," or "provide" is not used in connection with services, materials, or equipment in a context clearly requiring an obligation of Contractor, "provide" is implied.

F. Unless stated otherwise in the Contract Documents, words or phrases that have a well-known technical or construction industry or trade meaning are used in the Contract Documents in accordance with such recognized meaning.

ARTICLE 2 – PRELIMINARY MATTERS

2.01 *Delivery of Bonds and Evidence of Insurance*

A. When Contractor delivers the executed counterparts of the Agreement to Owner, Contractor shall also deliver to Owner such bonds as Contractor may be required to furnish.

B. *Evidence of Insurance:* Before any Work at the Site is started, Contractor and Owner shall each deliver to the other, with copies to each additional insured identified in the Supplementary Conditions, certificates of insurance (and other evidence of insurance which either of them or any additional insured may reasonably request) which Contractor and Owner respectively are required to purchase and maintain in accordance with Article 5.

1. Evidence of Insurance shall be provided on industry standard forms (such as Accord Certificate of Insurance 25-S), and shall be signed by an authorized agent of the CONTRACTOR's insurer.

2.02 *Copies of Documents*

A. Owner shall furnish to Contractor up to ten printed or hard copies of the Drawings and Project Manual. Additional copies will be furnished upon request at the cost of reproduction.

2.03 *Commencement of Contract Times; Notice to Proceed*

A. The Contract Times will commence to run on the thirtieth day after the Effective Date of the Agreement or, if a Notice to Proceed is given, on the day indicated in the Notice to Proceed. A Notice to Proceed may be given at any time within 30 days after the Effective Date of the Agreement. In no event will the Contract Times commence to run later than the thirtieth day after the Effective Date of the Agreement.

2.04 *Starting the Work*

A. Contractor shall start to perform the Work on the date when the Contract Times commence to run. No Work shall be done at the Site prior to the date on which the Contract Times commence to run except with the specific written authorization of the Owner.

2.05 *Before Starting Construction*

A. *Preliminary Schedules:* Within 10 days after the Effective Date of the Agreement (unless otherwise specified in the General Requirements), Contractor shall submit to Engineer for timely review:

1. a preliminary Progress Schedule indicating the times (numbers of days or dates) for starting and completing the various stages of the Work, including any Milestones specified in the Contract Documents;

2. a preliminary Schedule of Submittals; and

3. a preliminary Schedule of Values for all of the Work which includes quantities and prices of items which when added together equal the Contract Price and subdivides the Work into component parts in sufficient detail to serve as the basis for progress payments during performance of the Work. Such prices will include an appropriate amount of overhead and profit applicable to each item of Work.

2.06 *Preconstruction Conference; Designation of Authorized Representatives*

A. Before any Work at the Site is started, a conference attended by Owner, Contractor, Engineer, and others as appropriate will be held to establish a working understanding among the parties as to the Work and to discuss the schedules referred to in Paragraph 2.05.A, procedures for handling Shop Drawings and other submittals, processing Applications for Payment, and maintaining required records.

B. At this conference Owner and Contractor each shall designate, in writing, a specific individual to act as its authorized representative with respect to the services and responsibilities under the Contract. Such individuals shall have the authority to transmit instructions, receive information, render decisions relative to the Contract, and otherwise act on behalf of each respective party.

2.07 *Initial Acceptance of Schedules*

A. As soon as practicable, but at minimum 10 days before submission of the first Application for Payment if progress payments are requested in the Bid, a conference attended by Contractor, Owner, Engineer, and others as appropriate will be held to review for acceptability to Engineer as provided below the schedules submitted in accordance with Paragraph 2.05.A. Contractor shall have an additional 10 days to make corrections and adjustments and to complete and resubmit the schedules. No progress payment, if applicable, shall be made to Contractor until acceptable schedules are submitted to Engineer.

1. The Progress Schedule will be acceptable to Owner if it provides an orderly progression of the Work to completion within the Contract Times. Such acceptance will not impose on Owner responsibility for the Progress Schedule, for sequencing, scheduling, or progress of the Work, nor interfere with or relieve Contractor from Contractor's full responsibility therefor.

2. Contractor's Schedule of Submittals will be acceptable to Owner and Engineer if it provides a workable arrangement for reviewing and processing the required submittals.

3. Contractor's Schedule of Values will be acceptable to Owner and Engineer as to form and substance if it provides a reasonable allocation of the Contract Price to component parts of the Work, was specifically requested in the Bid and conforms to all requirements of the Contract Documents and the Agreement.

ARTICLE 3 – CONTRACT DOCUMENTS: INTENT, AMENDING, REUSE

3.01 *Intent*

A. The Contract Documents are complementary; what is required by one is as binding as if required by all.

B. It is the intent of the Contract Documents to describe a functionally complete project (or part thereof) to be constructed in accordance with the Contract Documents. Any labor, documentation, services, materials, or equipment that reasonably may be inferred from the Contract Documents or from prevailing custom or trade usage as being required to produce the

indicated result will be provided whether or not specifically called for, at no additional cost to Owner.

C. Clarifications and interpretations of the Contract Documents shall be issued by Owner as provided in Article 9.

3.02 *Reference Standards*

A. Standards, Specifications, Codes, Laws, and Regulations

1. Reference to standards, specifications, manuals, or codes of any technical society, organization, or association, or to Laws or Regulations, whether such reference be specific or by implication, shall mean the standard, specification, manual, code, or Laws or Regulations in effect at the time of opening of Bids (or on the Effective Date of the Agreement if there were no Bids), except as may be otherwise specifically stated in the Contract Documents.

2. No provision of any such standard, specification, manual, or code, or any instruction of a Supplier, shall be effective to change the duties or responsibilities of Owner, Contractor, or Engineer, or any of their subcontractors, consultants, agents, or employees, from those set forth in the Contract Documents. No such provision or instruction shall be effective to assign to Owner, Engineer, or any of their officers, directors, members, partners, employees, agents, consultants, or subcontractors, any duty or authority to supervise or direct the performance of the Work or any duty or authority to undertake responsibility inconsistent with the provisions of the Contract Documents.

3.03 *Reporting and Resolving Discrepancies*

A. *Reporting Discrepancies:*

1. *Contractor's Review of Contract Documents Before Starting Work*: Before undertaking each part of the Work, Contractor shall carefully study and compare the Contract Documents and check and verify pertinent figures therein and all applicable field measurements. Contractor shall promptly report in writing to Owner and Engineer any conflict, error, ambiguity, or discrepancy which Contractor discovers, or has actual knowledge of, and shall obtain a written interpretation or clarification from Owner before proceeding with any Work affected thereby.

2. *Contractor's Review of Contract Documents During Performance of Work*: If, during the performance of the Work, Contractor discovers any conflict, error, ambiguity, or discrepancy within the Contract Documents, or between the Contract Documents and (a) any applicable Law or Regulation, (b) any standard, specification, manual, or code, or (c) any instruction of any Supplier, then Contractor shall promptly report it to Owner and Engineer in writing. Contractor shall not proceed with the Work affected thereby (except in an emergency as required by Paragraph 6.16.A) until an amendment or supplement to the Contract Documents has been issued by one of the methods indicated in Paragraph 3.04.

3. Contractor shall not be liable to Owner or Engineer for failure to report any conflict, error, ambiguity, or discrepancy in the Contract Documents unless Contractor had actual knowledge thereof or reasonably should have known.

B. *Resolving Discrepancies:*

1. Except as may be otherwise specifically stated in the Contract Documents, the provisions of the Contract Documents shall take precedence in resolving any conflict, error, ambiguity, or discrepancy between the provisions of the Contract Documents and:

   a. the provisions of any standard, specification, manual, or code, or the instruction of any Supplier (whether or not specifically incorporated by reference in the Contract Documents); or

   b. the provisions of any Laws or Regulations applicable to the performance of the Work (unless such an interpretation of the provisions of the Contract Documents would result in violation of such Law or Regulation).

2. Where any Contract Documents deal with the same or similar subject matter, but do not directly conflict, then the requirements of both shall be met and such shall not be considered an ambiguity.

3.04 *Amending and Supplementing Contract Documents*

A. The Contract Documents may be amended to provide for additions, deletions, and revisions in the Work or to modify the terms and conditions thereof by either a Change Order or a Work Change Directive signed by both the Owner and Contractor.

B. The requirements of the Contract Documents may be supplemented, and minor variations and deviations in the Work may be authorized, by one or more of the following ways:

1. A Field Order signed by Owner;

2. Owner's written approval of a Shop Drawing or Sample (subject to the provisions of Paragraph 6.17.D.3); or

3. Owner's written interpretation or clarification.

4. At the ENGINEER's or OWNER's discretion and prior to the execution of the Agreement, a confirmed set of drawings and specifications may be prepared and issued, incorporating all changes issued between the date of Notice of Invitation to Bid and the date of the Agreement. If specifically listed in the Agreement, the confirmed drawings and specifications will become the Drawings and Specifications, completely replacing those previously issued. However, if the confirmed drawings and specifications are not specifically listed in the Agreement, they will be considered to have been provided as a courtesy only, for the convenience of the parties involved, and will have no legal or contractual effect.

3.05 *Reuse of Documents*

A. Contractor and any Subcontractor or Supplier shall not:

1. have or acquire any title to or ownership rights in any of the Drawings, Specifications, or other documents (or copies of any thereof) prepared by or bearing the seal of Engineer or its consultants, including electronic media editions; or

2. reuse any such Drawings, Specifications, other documents, or copies thereof on extensions of the Project or any other project without written consent of Owner and Engineer and specific written verification or adaptation by Engineer.

B. The prohibitions of this Paragraph 3.05 will survive final payment, or termination of the Contract. Nothing herein shall preclude Contractor from retaining copies of the Contract Documents for record purposes.

3.06 *Electronic Data*

A. Unless otherwise stated in the Supplementary Conditions, the data furnished by Owner or Engineer to Contractor, or by Contractor to Owner or Engineer, that may be relied upon are limited to the printed copies (also known as hard copies). Files in electronic media format of text, data, graphics, or other types are furnished only for the convenience of the receiving party. Any conclusion or information obtained or derived from such electronic files will be at the user's sole risk. If there is a discrepancy between the electronic files and the hard copies, the hard copies govern.

B. Because data stored in electronic media format can deteriorate or be modified inadvertently or otherwise without authorization of the data's creator, the party receiving electronic files agrees that it will perform acceptance tests or procedures within 60 days, after which the receiving party shall be deemed to have accepted the data thus transferred. Any errors detected within the 60-day acceptance period will be corrected by the transferring party.

C. When transferring documents in electronic media format, the transferring party makes no representations as to long term compatibility, usability, or readability of documents resulting from the use of software application packages, operating systems, or computer hardware differing from those used by the data's creator.

ARTICLE 4 – AVAILABILITY OF LANDS; SUBSURFACE AND PHYSICAL CONDITIONS; HAZARDOUS ENVIRONMENTAL CONDITIONS; REFERENCE POINTS

4.01 *Availability of Lands*

A. Owner shall furnish the Site. Owner shall notify Contractor of any encumbrances or restrictions not of general application but specifically related to use of the Site with which Contractor must comply in performing the Work. Owner will obtain in a timely manner and pay for easements for permanent structures or permanent changes in existing facilities. If Contractor and Owner are unable to agree on entitlement to or on the amount or extent, if any, of any adjustment in the Contract Price or Contract Times, or both, as a result of any delay in Owner's furnishing the Site or a part thereof, Contractor may make a Claim therefor as provided in Paragraph 10.05.

B. Upon reasonable written request, Owner shall furnish Contractor with a current statement of record legal title and legal description of the lands upon which the Work is to be performed and

Owner's interest therein as necessary for giving notice of or filing a mechanic's or construction lien against such lands in accordance with applicable Laws and Regulations, if such applies.

C. Contractor shall provide for all additional lands and access thereto that may be required for temporary construction facilities or storage of materials and equipment.

4.02 *Subsurface and Physical Conditions*

A. *Reports and Drawings:* The Supplementary Conditions identify:

1. those reports known to Owner of explorations and tests of subsurface conditions at or contiguous to the Site; and

2. those drawings known to Owner of physical conditions relating to existing surface or subsurface structures at the Site (except Underground Facilities).

B. *Limited Reliance by Contractor on Technical Data Authorized:* Contractor may rely upon the accuracy of the "technical data" contained in such reports and drawings, but such reports and drawings are not Contract Documents. Such "technical data" is identified in the Supplementary Conditions. Except for such reliance on such "technical data," Contractor may not rely upon or make any claim against Owner or Engineer, or any of their officers, directors, members, partners, employees, agents, consultants, or subcontractors with respect to:

1. the completeness of such reports and drawings for Contractor's purposes, including, but not limited to, any aspects of the means, methods, techniques, sequences, and procedures of construction to be employed by Contractor, and safety precautions and programs incident thereto; or

2. other data, interpretations, opinions, and information contained in such reports or shown or indicated in such drawings; or

3. any Contractor interpretation of or conclusion drawn from any "technical data" or any such other data, interpretations, opinions, or information.

C. If there are no reports of explorations and tests identified in the Supplementary Conditions, then any such items provided are provided only as a courtesy to CONTRACTOR, and such items are not represented to have been used in part or in whole in the ENGINEER's preparation of the Contract Documents, and CONTRACTOR shall have no grounds for claims related to the information provided therein, including the general accuracy of such information.

4.03 *Differing Subsurface or Physical Conditions*

A. *Notice:* If Contractor believes that any subsurface or physical condition that is uncovered or revealed either:

1. is of such a nature as to establish that any "technical data" on which Contractor is entitled to rely as provided in Paragraph 4.02 is materially inaccurate; or

2. is of such a nature as to require a change in the Contract Documents; or

3. differs materially from that shown or indicated in the Contract Documents; or

4. is of an unusual nature, and differs materially from conditions ordinarily encountered and generally recognized as inherent in work of the character provided for in the Contract Documents;

then Contractor shall, promptly after becoming aware thereof and before further disturbing the subsurface or physical conditions or performing any Work in connection therewith (except in an emergency as required by Paragraph 6.16.A), notify Owner and Engineer in writing about such condition. Contractor shall not further disturb such condition or perform any Work in connection therewith (except as aforesaid) until receipt of written order to do so.

B. *Engineer's Review*: After receipt of written notice as required by Paragraph 4.03.A, Engineer will promptly review the pertinent condition, determine the necessity of Owner's obtaining additional exploration or tests with respect thereto, and advise Owner in writing (with a copy to Contractor) of Engineer's findings and conclusions.

C. *Possible Price and Times Adjustments:*

1. The Contract Price or the Contract Times, or both, may be adjusted to the extent that the existence of such differing subsurface or physical condition causes an increase or decrease in Contractor's cost of, or time required for, performance of the Work; subject, however, to the following:

   a. such condition must meet any one or more of the categories described in Paragraph 4.03.A;

   b. with respect to Work that is paid for on a unit price basis, any adjustment in Contract Price will be subject to the provisions of Paragraphs 9.07 and 11.03; and

   c. acceptance ion writing by the Owner in Owner's sole discretion.

2. Contractor shall not be entitled to any adjustment in the Contract Price or Contract Times if:

   a. Contractor knew of the existence of such conditions at the time Contractor made a final commitment to Owner with respect to Contract Price and Contract Times by the submission of a Bid or becoming bound under a negotiated contract; or

   b. the existence of such condition could reasonably have been discovered or revealed as a result of any examination, investigation, exploration, test, or study of the Site and contiguous areas required by the Bidding Requirements or Contract Documents to be conducted by or for Contractor prior to Contractor's making such final commitment; or

   c. Contractor failed to give the written notice as required by Paragraph 4.03.A.

3. If Owner and Contractor are unable to agree on entitlement to or on the amount or extent, if any, of any adjustment in the Contract Price or Contract Times, or both, a Claim may be made therefor as provided in Paragraph 10.05. However, neither Owner or Engineer, or

any of their officers, directors, members, partners, employees, agents, consultants, or subcontractors shall be liable to Contractor for any claims, costs, losses, or damages (including but not limited to all fees and charges of engineers, architects, attorneys, and other professionals and all court or arbitration or other dispute resolution costs) sustained by Contractor on or in connection with any other project or anticipated project.

4.04 *Underground Facilities*

A. *Shown or Indicated:* The information and data shown or indicated in the Contract Documents with respect to existing Underground Facilities at or contiguous to the Site is based on information and data furnished to Owner or Engineer by the owners of such Underground Facilities, including Owner, or by others. Unless it is otherwise expressly provided in the Supplementary Conditions:

1. Owner and Engineer shall not be responsible for the accuracy or completeness of any such information or data provided by others; and

2. the cost of all of the following will be included in the Contract Price, and Contractor shall have full responsibility for:

   a. reviewing and checking all such information and data;

   b. locating all Underground Facilities shown or indicated in the Contract Documents;

   c. coordination of the Work with the owners of such Underground Facilities, including Owner, during construction; and

   d. the safety and protection of all such Underground Facilities and repairing any damage thereto resulting from the Work.

B. *Not Shown or Indicated:*

1. If an Underground Facility is uncovered or revealed at or contiguous to the Site which was not shown or indicated, or not shown or indicated with reasonable accuracy in the Contract Documents, Contractor shall, promptly after becoming aware thereof and before further disturbing conditions affected thereby or performing any Work in connection therewith (except in an emergency as required by Paragraph 6.16.A), identify the owner of such Underground Facility and give written notice to that owner and to Owner and Engineer. Engineer will promptly review the Underground Facility and determine the extent, if any, to which a change is required in the Contract Documents to reflect and document the consequences of the existence or location of the Underground Facility. During such time, Contractor shall be responsible for the safety and protection of such Underground Facility.

2. If Owner concludes that a change in the Contract Documents is required, a Work Change Directive or a Change Order will be issued to reflect and document such consequences. An adjustment may be made in the Contract Price or Contract Times, or both, to the extent that they are attributable to the existence or location of any Underground Facility that was not shown or indicated or not shown or indicated with reasonable accuracy in the Contract Documents and that Contractor did not know of and could not reasonably have been expected to be aware of or to have anticipated; and if the Owner approves of such

adjustment in its sole discretion. If Owner and Contractor are unable to agree on entitlement to or on the amount or extent, if any, of any such adjustment in Contract Price or Contract Times, Owner or Contractor may make a Claim therefor as provided in Paragraph 10.05.

4.05 *Reference Points*

A. Owner shall provide engineering surveys to establish reference points for construction which in Engineer's judgment are necessary to enable Contractor to proceed with the Work. Contractor shall be responsible for laying out the Work, shall protect and preserve the established reference points and property monuments, and shall make no changes or relocations without the prior written approval of Owner. Contractor shall report to Engineer and Owner whenever any reference point or property monument is lost or destroyed or requires relocation because of necessary changes in grades or locations, and shall be responsible for the accurate replacement or relocation of such reference points or property monuments by professionally qualified personnel.

4.06 *Hazardous Environmental Condition at Site*

A. *Reports and Drawings:* The Supplementary Conditions identify those reports and drawings known to Owner relating to Hazardous Environmental Conditions that have been identified at the Site.

B. *Limited Reliance by Contractor on Technical Data Authorized:* Contractor may rely upon the accuracy of the "technical data" contained in such reports and drawings, but such reports and drawings are not Contract Documents. Such "technical data" is identified in the Supplementary Conditions. Except for such reliance on such "technical data," Contractor may not rely upon or make any claim against Owner or Engineer, or any of their officers, directors, members, partners, employees, agents, consultants, or subcontractors with respect to:

1. the completeness of such reports and drawings for Contractor's purposes, including, but not limited to, any aspects of the means, methods, techniques, sequences and procedures of construction to be employed by Contractor and safety precautions and programs incident thereto; or

2. other data, interpretations, opinions and information contained in such reports or shown or indicated in such drawings; or

3. any Contractor interpretation of or conclusion drawn from any "technical data" or any such other data, interpretations, opinions or information.

C. Contractor shall not be responsible for any Hazardous Environmental Condition uncovered or revealed at the Site which was not shown or indicated in Drawings or Specifications or identified in the Contract Documents to be within the scope of the Work. Contractor shall be responsible for a Hazardous Environmental Condition created with any materials brought to the Site by Contractor, Subcontractors, Suppliers, or anyone else for whom Contractor is responsible.

D. If Contractor encounters a Hazardous Environmental Condition or if Contractor or anyone for whom Contractor is responsible creates a Hazardous Environmental Condition, Contractor

shall immediately: (i) secure or otherwise isolate such condition; (ii) stop all Work in connection with such condition and in any area affected thereby (except in an emergency as required by Paragraph 6.16.A); and (iii) notify Owner and Engineer (and promptly thereafter confirm such notice in writing). Owner shall promptly consult with Engineer concerning the necessity for Owner to retain a qualified expert to evaluate such condition or take corrective action, if any. Promptly after consulting with Engineer, Owner shall take such actions as are necessary to permit Owner to timely obtain required permits and provide Contractor the written notice required by Paragraph 4.06.E.

E. Contractor shall not be required to resume Work in connection with such condition or in any affected area until after Owner has obtained any required permits related thereto and delivered written notice to Contractor: (i) specifying that such condition and any affected area is or has been rendered safe for the resumption of Work; or (ii) specifying any special conditions under which such Work may be resumed safely. If Owner and Contractor cannot agree as to entitlement to or on the amount or extent, if any, of any adjustment in Contract Price or Contract Times, or both, as a result of such Work stoppage or such special conditions under which Work is agreed to be resumed by Contractor, either party may make a Claim therefor as provided in Paragraph 10.05.

F. If after receipt of such written notice Contractor does not agree to resume such Work based on a reasonable belief it is unsafe, or does not agree to resume such Work under such special conditions, then Owner may order the portion of the Work that is in the area affected by such condition to be deleted from the Work. If Owner and Contractor cannot agree as to entitlement to or on the amount or extent, if any, of an adjustment in Contract Price or Contract Times as a result of deleting such portion of the Work, then either party may make a Claim therefor as provided in Paragraph 10.05. Owner may have such deleted portion of the Work performed by Owner's own forces or others in accordance with Article 7.

G. Intentionally omitted.

H. To the fullest extent permitted by Laws and Regulations, Contractor shall indemnify and hold harmless Owner and Engineer, and the officers, directors, members, partners, employees, agents, consultants, and subcontractors of each and any of them from and against all claims, costs, losses, and damages (including but not limited to all fees and charges of engineers, architects, attorneys, and other professionals and all court or arbitration or other dispute resolution costs) arising out of or relating to a Hazardous Environmental Condition created by Contractor or by anyone for whom Contractor is responsible. Nothing in this Paragraph 4.06.H shall obligate Contractor to indemnify any individual or entity from and against the consequences of that individual's or entity's own negligence.

I. The provisions of Paragraphs 4.02, 4.03, and 4.04 do not apply to a Hazardous Environmental Condition uncovered or revealed at the Site.

ARTICLE 5 – BONDS AND INSURANCE

5.01 *Performance, Payment, and Other Bonds*

A. Contractor shall furnish performance and payment bonds, each in an amount at least equal to the Contract Price as security for the faithful performance and payment of all of Contractor's obligations under the Contract Documents. These bonds shall remain in effect until one year

after the date when final payment becomes due or until completion of the correction period specified in Paragraph 13.07, whichever is later, except as provided otherwise by Laws or Regulations or by the Contract Documents. Contractor shall also furnish such other bonds as are required by the Contract Documents.

B. All bonds shall be in the form prescribed by the Contract Documents except as provided otherwise by Laws or Regulations, and shall be executed by such sureties as are named in the list of "Companies Holding Certificates of Authority as Acceptable Sureties on Federal Bonds and as Acceptable Reinsuring Companies" as published in Circular 570 (amended) by the Financial Management Service, Surety Bond Branch, U.S. Department of the Treasury. All bonds signed by an agent or attorney-in-fact must be accompanied by a certified copy of that individual's authority to bind the surety. The evidence of authority shall show that it is effective on the date the agent or attorney-in-fact signed each bond.

C. If the surety on any bond furnished by Contractor is declared bankrupt or becomes insolvent or its right to do business is terminated in any state where any part of the Project is located or it ceases to meet the requirements of Paragraph 5.01.B, Contractor shall promptly notify Owner and Engineer and shall, within 20 days after the event giving rise to such notification, provide another bond and surety, both of which shall comply with the requirements of Paragraphs 5.01.B and 5.02.

5.02 *Licensed Sureties and Insurers*

A. All bonds and insurance required by the Contract Documents to be purchased and maintained by Owner or Contractor shall be obtained from surety or insurance companies that are duly licensed or authorized in the jurisdiction in which the Project is located to issue bonds or insurance policies for the limits and coverages so required. Such surety and insurance companies shall also meet such additional requirements and qualifications as may be provided in the Supplementary Conditions.

5.03 *Certificates of Insurance*

A. Contractor shall deliver to Owner, with copies to each additional insured and loss payee identified in the Supplementary Conditions, certificates of insurance (and other evidence of insurance requested by Owner or any other additional insured) which Contractor is required to purchase and maintain.

B. Intentionally omitted.

C. Failure of Owner to demand such certificates or other evidence of Contractor's full compliance with these insurance requirements or failure of Owner to identify a deficiency in compliance from the evidence provided shall not be construed as a waiver of Contractor's obligation to maintain such insurance.

D. Owner does not represent that insurance coverage and limits established in this Contract necessarily will be adequate to protect Contractor.

E. The insurance and insurance limits required herein shall not be deemed as a limitation on Contractor's liability under the indemnities granted to Owner in the Contract Documents.

5.04 *Contractor's Insurance*

A. Contractor shall purchase and maintain such insurance as is required under the County's General Terms and also as is appropriate for the Work being performed and as will provide protection from claims set forth below which may arise out of or result from Contractor's performance of the Work and Contractor's other obligations under the Contract Documents, whether it is to be performed by Contractor, any Subcontractor or Supplier, or by anyone directly or indirectly employed by any of them to perform any of the Work, or by anyone for whose acts any of them may be liable:

1. claims under workers' compensation, disability benefits, and other similar employee benefit acts;

2. claims for damages because of bodily injury, occupational sickness or disease, or death of Contractor's employees;

3. claims for damages because of bodily injury, sickness or disease, or death of any person other than Contractor's employees;

4. claims for damages insured by reasonably available personal injury liability coverage which are sustained:

   a. by any person as a result of an offense directly or indirectly related to the employment of such person by Contractor, or

   b. by any other person for any other reason;

5. claims for damages, other than to the Work itself, because of injury to or destruction of tangible property wherever located, including loss of use resulting therefrom; and

6. claims for damages because of bodily injury or death of any person or property damage arising out of the ownership, maintenance or use of any motor vehicle.

B. The policies of insurance required by this Paragraph 5.04 shall:

1. with respect to insurance required by Paragraphs 5.04.A.3 through 5.04.A.6 inclusive, be written on an occurrence basis, include as additional insureds (subject to any customary exclusion regarding professional liability) Owner and Engineer, and any other individuals or entities identified in the Supplementary Conditions, all of whom shall be listed as additional insureds, and include coverage for the respective officers, directors, members, partners, employees, agents, consultants, and subcontractors of each and any of all such additional insureds, and the insurance afforded to these additional insureds shall provide primary coverage for all claims covered thereby;

2. include at least the specific coverages and be written for not less than the limits of liability provided in the County's General Terms, Supplementary Conditions or required by Laws or Regulations, whichever is greatest;

3. include contractual liability insurance covering Contractor's indemnity obligations under Paragraphs 6.11 and 6.20;

4. contain a provision or endorsement that the coverage afforded will not be canceled, materially changed or renewal refused until at least 30 days prior written notice has been given to Owner and Contractor and to each other additional insured identified in the Supplementary Conditions to whom a certificate of insurance has been issued (and the certificates of insurance furnished by the Contractor pursuant to Paragraph 5.03 will so provide);

5. remain in effect at least until final payment and at all times thereafter when Contractor may be correcting, removing, or replacing defective Work in accordance with Paragraph 13.07; and

6. include completed operations coverage:

   a. Such insurance shall remain in effect for two years after final payment.

   b. Contractor shall furnish Owner and each other additional insured identified in the Supplementary Conditions, to whom a certificate of insurance has been issued, evidence satisfactory to Owner and any such additional insured of continuation of such insurance at final payment and one year thereafter.

C. The limits of liability for the insurance required by Paragraph 5.04 of the General Conditions shall provide the following coverages for not less that the following amounts or greater where required by Laws and Regulations:

1. 5.04.A.1 and 5.04.A.2. Workers' Compensation, etc. under Paragraphs 5.04.A.1 and 5.04.A.2 of the General Conditions:

   a. State: Statutory

   b. Applicable Federal (e.g. Longshoreman's): Statutory

   c. Employer's Liability: $1,000,000

2. 5.04.A.3, 5.04.A.4 & 5.04.A.5 CONTRACTOR's Liability Insurance under Paragraphs 5.04.A.3 through 5.04.A.5 of the General Conditions which shall also include completed operations and product liability coverages and eliminate the exclusion with respect to property under the care, custody and control of CONTRACTOR:

   a. General Aggregate (Except Products-Completed Operations): $1,000,000

   b. Products-Completed Operations Aggregate: $1,000,000

   c. Personal and Advertising Injury (Per Person/Organization): $1,000,000

   d. Each Occurrence (Bodily Injury and Property Damage): $1,000,000

   e. Property Damage liability insurance will provide Explosion, Collapse and Underground Coverages where applicable.

f. Excess Liability -

1) General Aggregate: $1,000,000

2) Each Occurrence: $1,000,000

3. 5.04.A.6 Automobile Liability:

a. Bodily Injury: $500,000 Each Person; $1,000,000 Each Accident

b. Property Damage: $1,000,000 Each Accident

4. 5.04.B.4 The Contractual Liability coverage required by Paragraph 5.04 shall provide coverage for not less than the following amounts:

a. General Aggregate: $2,000,000

b. Each Occurrence (Bodily Injury and Property Damage): $2,000,000

5.05 *Owner's Liability Insurance*

A. In addition to the insurance required to be provided by Contractor under Paragraph 5.04, Owner, at Owner's option, may purchase and maintain at Owner's expense Owner's own liability insurance as will protect Owner against claims which may arise from operations under the Contract Documents.

5.06 *Property Insurance*

A. Unless otherwise provided in the Supplementary Conditions, Contractor shall purchase and maintain property insurance upon the Work at the Site in the amount of the full replacement cost thereof (subject to such deductible amounts as may be provided in the Supplementary Conditions or required by Laws and Regulations). This insurance shall:

1. include the interests of Owner, Contractor, Subcontractors, and Engineer, and any other individuals or entities identified in the Supplementary Conditions, and the officers, directors, members, partners, employees, agents, consultants, and subcontractors of each and any of them, each of whom is deemed to have an insurable interest and shall be listed as a loss payee;

2. be written on a Builder's Risk "all-risk" policy form that shall at least include insurance for physical loss or damage to the Work, temporary buildings, falsework, and materials and equipment in transit, and shall insure against at least the following perils or causes of loss: fire, lightning, extended coverage, theft, vandalism and malicious mischief, earthquake, collapse, debris removal, demolition occasioned by enforcement of Laws and Regulations, water damage (other than that caused by flood), and such other perils or causes of loss as may be specifically required by the Supplementary Conditions.

3. include expenses incurred in the repair or replacement of any insured property (including but not limited to fees and charges of engineers and architects);

4. cover materials and equipment stored at the Site or at another location that was agreed to in writing by Owner prior to being incorporated in the Work, provided that such materials and equipment have been included in an Application for Payment recommended by Engineer;

5. allow for partial utilization of the Work by Owner;

6. include testing and startup; and

7. be maintained in effect until final payment is made unless otherwise agreed to in writing by Owner, Contractor, and Engineer with 30 days written notice to each other loss payee to whom a certificate of insurance has been issued.

B. Contractor shall purchase and maintain such equipment breakdown insurance or additional property insurance as may be required by the Supplementary Conditions or Laws and Regulations which will include the interests of Owner, Contractor, Subcontractors, and Engineer, and any other individuals or entities identified in the Supplementary Conditions, and the officers, directors, members, partners, employees, agents, consultants and subcontractors of each and any of them, each of whom is deemed to have an insurable interest and shall be listed as a loss payee.

C. All the policies of insurance (and the certificates or other evidence thereof) required to be purchased and maintained in accordance with this Paragraph 5.06 will contain a provision or endorsement that the coverage afforded will not be canceled or materially changed or renewal refused until at least 30 days prior written notice has been given to Owner and Contractor and to each other loss payee to whom a certificate of insurance has been issued and will contain waiver provisions in accordance with Paragraph 5.07.

D. Owner shall not be responsible for purchasing and maintaining any property insurance specified in this Paragraph 5.06 to protect the interests of Contractor, Subcontractors, or others in the Work to the extent of any deductible amounts that are identified in the Supplementary Conditions. The risk of loss within such identified deductible amount will be borne by Contractor, Subcontractors, or others suffering any such loss, and if any of them wishes property insurance coverage within the limits of such amounts, each may purchase and maintain it at the purchaser's own expense.

5.07 *Waiver of Rights*

A. Owner and Contractor intend that all policies purchased in accordance with Paragraph 5.06 will protect Owner, Contractor, Subcontractors, and Engineer, and all other individuals or entities identified in the Supplementary Conditions as loss payees (and the officers, directors, members, partners, employees, agents, consultants, and subcontractors of each and any of them) in such policies and will provide primary coverage for all losses and damages caused by the perils or causes of loss covered thereby. All such policies shall contain provisions to the effect that in the event of payment of any loss or damage the insurers will have no rights of recovery against any of the insureds or loss payees thereunder. Only to the extent permitted under such policies, Owner and Contractor waive all rights against each other and their respective officers, directors, members, partners, employees, agents, consultants and subcontractors of each and any of them for all losses and damages caused by, arising out of or resulting from any of the perils or causes of loss covered by such policies and any other

property insurance applicable to the Work; and, in addition, waive all such rights against Subcontractors and Engineer, and all other individuals or entities identified in the Supplementary Conditions as loss payees (and the officers, directors, members, partners, employees, agents, consultants, and subcontractors of each and any of them) under such policies for losses and damages so caused. None of the above waivers shall extend to the rights that any party making such waiver may have to the proceeds of insurance held by Owner as trustee or otherwise payable under any policy so issued. Notwithstanding the foregoing, any waiver shall not apply if it violates the provisions of any policy or would eliminate or limit recovery for any loss.

B. Intentionally omitted.

C. Intentionally omitted.

5.08 *Receipt and Application of Insurance Proceeds*

A. Any insured loss under the policies of insurance required by Paragraph 5.06 will be adjusted with Owner and made payable to Owner as fiduciary for the loss payees, as their interests may appear, subject to the requirements of any applicable mortgage clause and of Paragraph 5.08.B. Owner shall deposit in a separate account any money so received and shall distribute it in accordance with such agreement as the parties in interest may reach. If no other special agreement is reached, the damaged Work shall be repaired or replaced, the moneys so received applied on account thereof, and the Work and the cost thereof covered by an appropriate Change Order.

B. Owner as fiduciary shall have power to adjust and settle any loss with the insurers unless one of the parties in interest shall object in writing within 15 days after the occurrence of loss to Owner's exercise of this power. If such objection be made, Owner as fiduciary shall make settlement with the insurers in accordance with such agreement as the parties in interest may reach. If no such agreement among the parties in interest is reached, Owner as fiduciary shall adjust and settle the loss with the insurers and, if required in writing by any party in interest, Owner as fiduciary shall give bond for the proper performance of such duties.

5.09 *Acceptance of Bonds and Insurance; Option to Replace*

A. If OWNER has any objection to the coverage afforded by or other provisions of the Bonds or insurance required to be purchased and maintained by the CONTRACTOR in accordance with Article 5 on the basis of non-conformance with the Contract Documents, OWNER shall so notify CONTRACTOR in writing within 10 days after receipt of the certificates (or other evidence requested) required by paragraph 2.01.B. CONTRACTOR shall provide to OWNER such additional information in respect of insurance provided as OWNER may reasonably request. If CONTRACTOR does not purchase or maintain all of the Bonds and Insurance required by the Contract Documents, CONTRACTOR shall notify OWNER in writing of such failure to purchase prior to the start of the Work, or of such failure to maintain prior to any change in the required coverage. Without prejudice to any other right or remedy, OWNER may elect to obtain equivalent Bonds or insurance to protect OWNER's interests at the expense of CONTRACTOR, and a Change Order shall be issued to adjust the Contract Price accordingly.

5.10 *Partial Utilization, Acknowledgment of Property Insurer*

A. If Owner finds it necessary to occupy or use a portion or portions of the Work prior to Substantial Completion of all the Work as provided in Paragraph 14.05, no such use or occupancy shall commence before the insurers providing the property insurance pursuant to Paragraph 5.06 have acknowledged notice thereof and in writing effected any changes in coverage necessitated thereby. The insurers providing the property insurance shall consent by endorsement on the policy or policies, but the property insurance shall not be canceled or permitted to lapse on account of any such partial use or occupancy.

ARTICLE 6 – CONTRACTOR'S RESPONSIBILITIES

6.01 *Supervision and Superintendence*

A. Contractor shall supervise, inspect, and direct the Work competently and efficiently, devoting such attention thereto and applying such skills and expertise as may be necessary to perform the Work in accordance with the Contract Documents. Contractor shall be solely responsible for the means, methods, techniques, sequences, and procedures of construction. Contractor shall not be responsible for the negligence of Owner or Engineer in the design or specification of a specific means, method, technique, sequence, or procedure of construction which is shown or indicated in and expressly required by the Contract Documents.

B. At all times during the progress of the Work, Contractor shall assign a competent resident superintendent who shall not be replaced without written notice to Owner and Engineer except under extraordinary circumstances.

1. At the OWNER's or ENGINEER's request, CONTRACTOR shall provide a summary of the superintendent's relevant experience with current references and their contact information.

6.02 *Labor; Working Hours*

A. Contractor shall provide competent, suitably qualified personnel to survey and lay out the Work and perform construction as required by the Contract Documents. Contractor shall at all times maintain good discipline and order at the Site.

B. Except as otherwise required for the safety or protection of persons or the Work or property at the Site or adjacent thereto, and except as otherwise stated in the Contract Documents, all Work at the Site shall be performed during regular working hours. Contractor will not permit the performance of Work on a Saturday, Sunday, or any legal holiday without Owner's written consent (which will not be unreasonably withheld) given after prior written notice to Engineer and Owner.

6.03 *Services, Materials, and Equipment*

A. Unless otherwise specified in the Contract Documents, Contractor shall provide and assume full responsibility for all services, materials, equipment, labor, transportation, construction equipment and machinery, tools, appliances, fuel, power, light, heat, telephone, water, sanitary facilities, temporary facilities, and all other facilities and incidentals necessary for the performance, testing, start-up, and completion of the Work.

B. All materials and equipment incorporated into the Work shall be as specified or, if not specified, shall be of good quality and new, except as otherwise provided in the Contract Documents. All special warranties and guarantees required by the Specifications shall expressly run to the benefit of Owner. If required by Owner or Engineer, Contractor shall furnish satisfactory evidence (including reports of required tests) as to the source, kind, and quality of materials and equipment.

C. All materials and equipment shall be stored, applied, installed, connected, erected, protected, used, cleaned, and conditioned in accordance with instructions of the applicable Supplier, except as otherwise may be provided in the Contract Documents.

6.04 *Progress Schedule*

A. Contractor shall adhere to the Progress Schedule established in accordance with Paragraph 2.07 as it may be adjusted from time to time as provided below.

1. Contractor shall submit to Owner for acceptance, and Engineer for acceptance (to the extent indicated in Paragraph 2.07), proposed adjustments in the Progress Schedule that will not result in changing the Contract Times. Such adjustments will comply with any provisions of the General Requirements applicable thereto.

2. Proposed adjustments in the Progress Schedule that will change the Contract Times shall be submitted in accordance with the requirements of Article 12. Adjustments in Contract Times may only be made by a Change Order signed by the Owner.

6.05 *Substitutes and "Or-Equals"*

A. Whenever an item of material or equipment is specified or described in the Contract Documents by using the name of a proprietary item or the name of a particular Supplier, the specification or description is intended to establish the type, function, appearance, and quality required. Unless the specification or description contains or is followed by words reading that no like, equivalent, or "or-equal" item or no substitution is permitted, other items of material or equipment or material or equipment of other Suppliers may be submitted to Engineer and Owner for review under the circumstances described below.

1. *"Or-Equal" Items:* If in Owner's sole discretion an item of material or equipment proposed by Contractor is functionally equal to that named and sufficiently similar so that no change in related Work will be required, it may be considered by Owner as an "or-equal" item, in which case review and approval of the proposed item may, in Owner's sole discretion, be accomplished without compliance with some or all of the requirements for approval of proposed substitute items. For the purposes of this Paragraph 6.05.A.1, a proposed item of material or equipment will be considered functionally equal to an item so named if:

a. in the exercise of reasonable judgment Owner, which the assistance of Engineer when requested, determines that:

1) it is at least equal in materials of construction, quality, durability, appearance, strength, and design characteristics;

2) it will reliably perform at least equally well the function and achieve the results imposed by the design concept of the completed Project as a functioning whole; and

3) it has a proven record of performance and availability of responsive service.

b. Contractor certifies that, if approved and incorporated into the Work:

1) there will be no increase in cost to the Owner or increase in Contract Times; and

2) it will conform substantially to the detailed requirements of the item named in the Contract Documents.

2. *Substitute Items:*

a. If in Owner's sole discretion an item of material or equipment proposed by Contractor does not qualify as an "or-equal" item under Paragraph 6.05.A.1, it will be considered a proposed substitute item.

b. Contractor shall submit sufficient information as provided below to allow Owner to determine if the item of material or equipment proposed is essentially equivalent to that named and an acceptable substitute therefor. Requests for review of proposed substitute items of material or equipment will not be accepted by Owner from anyone other than Contractor.

c. Owner may request Engineers review and the requirements for review by Engineer will be as set forth in Paragraph 6.05.A.2.d, as supplemented by the General Requirements, and as Engineer may decide is appropriate under the circumstances.

d. Contractor shall make written application to Owner and Engineer for review of a proposed substitute item of material or equipment that Contractor seeks to furnish or use. The application:

1) shall certify that the proposed substitute item will:

a) perform adequately the functions and achieve the results called for by the general design,

b) be similar in substance to that specified, and

c) be suited to the same use as that specified;

2) will state:

a) the extent, if any, to which the use of the proposed substitute item will prejudice Contractor's achievement of Substantial Completion on time,

b) whether use of the proposed substitute item in the Work will require a change in any of the Contract Documents (or in the provisions of any other direct contract with Owner for other work on the Project) to adapt the design to the proposed substitute item, and

c) whether incorporation or use of the proposed substitute item in connection with the Work is subject to payment of any license fee or royalty;

3) will identify:

a) all variations of the proposed substitute item from that specified, and

b) available engineering, sales, maintenance, repair, and replacement services; and

4) shall contain an itemized estimate of all costs or credits that will result directly or indirectly from use of such substitute item, including costs of redesign and claims of other contractors affected by any resulting change.

B. *Substitute Construction Methods or Procedures:* If a specific means, method, technique, sequence, or procedure of construction is expressly required by the Contract Documents, Contractor may furnish or utilize a substitute means, method, technique, sequence, or procedure of construction approved by Owner in Owner's sole discretion. Contractor shall submit sufficient information to allow Owner, in Owner's sole discretion, to determine that the substitute proposed is equivalent to that expressly called for by the Contract Documents. Owner may request Engineer's review and the requirements for review by Engineer will be similar to those provided in Paragraph 6.05.A.2.

C. *Engineer's Evaluation:* Owner and Engineer will be allowed a reasonable time within which to evaluate each proposal or submittal made pursuant to Paragraphs 6.05.A and 6.05.B. Owner or Engineer may require Contractor to furnish additional data about the proposed substitute item. Owner will be the sole judge of acceptability. No "or equal" or substitute will be ordered, installed or utilized until Owner's review is complete, which will be evidenced by a Change Order in the case of a substitute and an approved Shop Drawing for an "or equal." Owner will advise Contractor in writing of any negative determination.

D. *Special Guarantee:* Owner may require Contractor to furnish at Contractor's expense a special performance guarantee or other surety with respect to any substitute.

E. *Engineer's Cost Reimbursement*: Engineer will record Engineer's costs in evaluating a substitute proposed or submitted by Contractor pursuant to Paragraphs 6.05.A.2 and 6.05.B. Whether or not Engineer approves a substitute so proposed or submitted by Contractor, Contractor shall reimburse Owner for the reasonable charges of Engineer for evaluating each such proposed substitute. Contractor shall also reimburse Owner for the reasonable charges of Engineer for making changes in the Contract Documents (or in the provisions of any other direct contract with Owner) resulting from the acceptance of each proposed substitute.

F. *Contractor's Expense*: Contractor shall provide all data in support of any proposed substitute or "or-equal" at Contractor's expense.

6.06 *Concerning Subcontractors, Suppliers, and Others*

A. Contractor shall not employ any Subcontractor, Supplier, or other individual or entity (including those acceptable to Owner as indicated in Paragraph 6.06.B), whether initially or as a replacement, against whom Owner may have reasonable objection. Contractor shall not be

required to employ any Subcontractor, Supplier, or other individual or entity to furnish or perform any of the Work against whom Contractor has reasonable objection.

B. If the Supplementary Conditions require the identity of certain Subcontractors, Suppliers, or other individuals or entities to be submitted to Owner in advance for acceptance by Owner by a specified date prior to the Effective Date of the Agreement, and if Contractor has submitted a list thereof in accordance with the Supplementary Conditions, Owner's acceptance (either in writing or by failing to make written objection thereto by the date indicated for acceptance or objection in the Bidding Documents or the Contract Documents) of any such Subcontractor, Supplier, or other individual or entity so identified may be revoked on the basis of reasonable objection after due investigation. Contractor shall submit an acceptable replacement for the rejected Subcontractor, Supplier, or other individual or entity, and the Contract Price will be adjusted by the difference in the cost occasioned by such replacement, and an appropriate Change Order will be issued. No acceptance by Owner of any such Subcontractor, Supplier, or other individual or entity, whether initially or as a replacement, shall constitute a waiver of any right of Owner or Engineer to reject defective Work. A list of Subcontractors, Suppliers, or other individuals or entities shall be required as indicated in the Bid Form or the Agreement.

C. Contractor shall be fully responsible to Owner and Engineer for all acts and omissions of the Subcontractors, Suppliers, and other individuals or entities performing or furnishing any of the Work just as Contractor is responsible for Contractor's own acts and omissions. Nothing in the Contract Documents:

1. shall create for the benefit of any such Subcontractor, Supplier, or other individual or entity any contractual relationship between Owner or Engineer and any such Subcontractor, Supplier or other individual or entity; nor

2. shall create any obligation on the part of Owner or Engineer to pay or to see to the payment of any moneys due any such Subcontractor, Supplier, or other individual or entity except as may otherwise be required by Laws and Regulations.

D. Contractor shall be solely responsible for scheduling and coordinating the Work of Subcontractors, Suppliers, and other individuals or entities performing or furnishing any of the Work under a direct or indirect contract with Contractor.

E. Contractor shall require all Subcontractors, Suppliers, and such other individuals or entities performing or furnishing any of the Work to communicate with Engineer through Contractor.

F. The divisions and sections of the Specifications and the identifications of any Drawings shall not control Contractor in dividing the Work among Subcontractors or Suppliers or delineating the Work to be performed by any specific trade.

G. All Work performed for Contractor by a Subcontractor or Supplier will be pursuant to an appropriate agreement between Contractor and the Subcontractor or Supplier which specifically binds the Subcontractor or Supplier to the applicable terms and conditions of the Contract Documents for the benefit of Owner and Engineer. Whenever any such agreement is with a Subcontractor or Supplier who is listed as a loss payee on the property insurance provided in Paragraph 5.06, the agreement between the Contractor and the Subcontractor or

Supplier will contain provisions whereby the Subcontractor or Supplier waives all rights against Owner, Contractor, Engineer, and all other individuals or entities identified in the Supplementary Conditions to be listed as insureds or loss payees (and the officers, directors, members, partners, employees, agents, consultants, and subcontractors of each and any of them) for all losses and damages caused by, arising out of, relating to, or resulting from any of the perils or causes of loss covered by such policies and any other property insurance applicable to the Work. If the insurers on any such policies require separate waiver forms to be signed by any Subcontractor or Supplier, Contractor will obtain the same.

6.07 *Patent Fees and Royalties*

A. Contractor shall pay all license fees and royalties and assume all costs incident to the use in the performance of the Work or the incorporation in the Work of any invention, design, process, product, or device which is the subject of patent rights or copyrights held by others. If a particular invention, design, process, product, or device is specified in the Contract Documents for use in the performance of the Work and if, to the actual knowledge of Owner or Engineer, its use is subject to patent rights or copyrights calling for the payment of any license fee or royalty to others, the existence of such rights shall be disclosed by Owner in the Contract Documents.

B. Intentionally omitted.

C. To the fullest extent permitted by Laws and Regulations, Contractor shall indemnify and hold harmless Owner and Engineer, and the officers, directors, members, partners, employees, agents, consultants and subcontractors of each and any of them from and against all claims, costs, losses, and damages (including but not limited to all fees and charges of engineers, architects, attorneys, and other professionals and all court or arbitration or other dispute resolution costs) arising out of or relating to any infringement of patent rights or copyrights incident to the use in the performance of the Work or resulting from the incorporation in the Work of any invention, design, process, product, or device not specified in the Contract Documents.

6.08 *Permits*

A. Unless otherwise provided in the Supplementary Conditions, Contractor shall obtain and pay for all construction permits, licenses, bonds, and other costs associated with construction permitting agency requirements. Owner shall assist Contractor, when necessary, in obtaining such permits and licenses. Contractor shall pay all governmental charges and inspection fees necessary for the prosecution of the Work which are applicable at the time of opening of Bids, or, if there are no Bids, on the Effective Date of the Agreement.

1. Unless otherwise indicated in the Contract Documents, CONTRACTOR shall pay all charges of utility owners for the establishment of new accounts and physical service connections, and for initiation of utility services. OWNER shall assume such accounts upon Substantial Completion, but CONTRACTOR shall be responsible for fees and usage charges up to and including the date of Substantial Completion, whether or not they are billed by the utility prior to the date of Substantial Completion.

6.09 *Laws and Regulations*

A. Contractor shall give all notices required by and shall comply with all Laws and Regulations applicable to the performance of the Work. Except where otherwise expressly required by applicable Laws and Regulations, neither Owner nor Engineer shall be responsible for monitoring Contractor's compliance with any Laws or Regulations.

B. If Contractor performs any Work in violation of, or knowing or having reason to know that it is contrary to, any Laws or Regulations, Contractor shall bear all claims, costs, losses, and damages (including but not limited to all fees and charges of engineers, architects, attorneys, and other professionals and all court or arbitration or other dispute resolution costs) arising out of or relating to such Work. However, it shall not be Contractor's responsibility to make certain that the Specifications and Drawings are in accordance with Laws and Regulations, but this shall not relieve Contractor of Contractor's obligations under Paragraph 3.03.

C. Changes in Laws or Regulations not known at the time of opening of Bids (or, on the Effective Date of the Agreement if there were no Bids) having an effect on the cost or time of performance of the Work shall be the subject of an adjustment in Contract Price or Contract Times, but only if acceptable to Owner in Owner's sole discretion. If Owner and Contractor are unable to agree on entitlement to or on the amount or extent, if any, of any such adjustment, a Claim may be made therefor as provided in Paragraph 10.05.

6.10 *Taxes*

A. Contractor shall pay all sales, consumer, use, and other similar taxes required to be paid by Contractor in accordance with the Laws and Regulations of the place of the Project which are applicable during the performance of the Work. Owner is a tax-exempt political subdivision of the Commonwealth of Virginia.

B. Said taxes shall not be in addition to the contract price between the OWNER and the CONTRACTOR, as the taxes shall be an obligation of the CONTRACTOR and not of the OWNER, and the OWNER shall be held harmless for same by the CONTRACTOR.

C. Pollution control facilities qualify for exemption from sales and use tax in accordance with Section 58.1-609.3 of the Code of Virginia. If this Project qualifies as pollution control facilities, the Work will be certified to the Virginia Department of Taxation as an approved pollution control facility by the Department of Environmental Quality. CONTRACTOR shall request from the Virginia Department of Taxation the applicable sales and use tax exemption certificate.

6.11 *Use of Site and Other Areas*

A. *Limitation on Use of Site and Other Areas:*

1. Contractor shall confine construction equipment, the storage of materials and equipment, and the operations of workers to the Site and other areas permitted by Laws and Regulations, and shall not unreasonably encumber the Site and other areas with construction equipment or other materials or equipment. Contractor shall assume full responsibility for any damage to any such land or area, or to the owner or occupant thereof, or of any adjacent land or areas resulting from the performance of the Work.

2. Should any claim be made by any such owner or occupant because of the performance of the Work, Contractor shall promptly settle with such other party by negotiation or otherwise resolve the claim by arbitration or other dispute resolution proceeding or at law.

3. To the fullest extent permitted by Laws and Regulations, Contractor shall indemnify and hold harmless Owner and Engineer, and the officers, directors, members, partners, employees, agents, consultants and subcontractors of each and any of them from and against all claims, costs, losses, and damages (including but not limited to all fees and charges of engineers, architects, attorneys, and other professionals and all court or arbitration or other dispute resolution costs) arising out of or relating to any claim or action, legal or equitable, brought by any such owner or occupant against Owner, Engineer, or any other party indemnified hereunder to the extent caused by or based upon Contractor's performance of the Work.

B. *Removal of Debris During Performance of the Work:* During the progress of the Work Contractor shall keep the Site and other areas free from accumulations of waste materials, rubbish, and other debris. Removal and disposal of such waste materials, rubbish, and other debris shall conform to applicable Laws and Regulations.

C. *Cleaning:* Prior to Substantial Completion of the Work Contractor shall clean the Site and the Work and make it ready for utilization by Owner. At the completion of the Work Contractor shall remove from the Site all tools, appliances, construction equipment and machinery, and surplus materials and shall restore to original condition all property not designated for alteration by the Contract Documents.

D. *Loading Structures:* Contractor shall not load nor permit any part of any structure to be loaded in any manner that will endanger the structure, nor shall Contractor subject any part of the Work or adjacent property to stresses or pressures that will endanger it.

6.12 *Record Documents*

A. Contractor shall maintain in a safe place at the Site one record copy of all Drawings, Specifications, Addenda, Change Orders, Work Change Directives, Field Orders, and written interpretations and clarifications in good order and annotated to show changes made during construction. These record documents together with all approved Samples and a counterpart of all approved Shop Drawings will be available to Engineer for reference. Upon completion of the Work, these record documents, Samples, and Shop Drawings will be delivered to Engineer and Owner.

6.13 *Safety and Protection*

A. Contractor shall be solely responsible for initiating, maintaining and supervising all safety precautions and programs in connection with the Work. Such responsibility does not relieve Subcontractors of their responsibility for the safety of persons or property in the performance of their work, nor for compliance with applicable safety Laws and Regulations. Contractor shall take all necessary precautions for the safety of, and shall provide the necessary protection to prevent damage, injury or loss to:

1. all persons on the Site or who may be affected by the Work;

2. all the Work and materials and equipment to be incorporated therein, whether in storage on or off the Site; and

3. other property at the Site or adjacent thereto, including trees, shrubs, lawns, walks, pavements, roadways, structures, utilities, and Underground Facilities not designated for removal, relocation, or replacement in the course of construction.

B. Contractor shall comply with all applicable Laws and Regulations relating to the safety of persons or property, or to the protection of persons or property from damage, injury, or loss; and shall erect and maintain all necessary safeguards for such safety and protection. Contractor shall notify owners of adjacent property and of Underground Facilities and other utility owners when prosecution of the Work may affect them, and shall cooperate with them in the protection, removal, relocation, and replacement of their property.

C. Contractor shall comply with the applicable requirements of Owner's safety programs, if any. The Supplementary Conditions identify any Owner's safety programs that are applicable to the Work.

D. Contractor shall inform Owner and Engineer of the specific requirements of Contractor's safety program with which Owner's and Engineer's employees and representatives must comply while at the Site.

E. All damage, injury, or loss to any property referred to in Paragraph 6.13.A.2 or 6.13.A.3 caused, directly or indirectly, in whole or in part, by Contractor, any Subcontractor, Supplier, or any other individual or entity directly or indirectly employed by any of them to perform any of the Work, or anyone for whose acts any of them may be liable, shall be remedied by Contractor (except damage or loss directly and solely attributable to the fault of Drawings or Specifications or to the willful misconduct of Owner or Engineer or anyone employed by any of them, or anyone for whose acts any of them may be liable, and not attributable, directly or indirectly, in whole or in part, to the fault or negligence of Contractor or any Subcontractor, Supplier, or other individual or entity directly or indirectly employed by any of them).

F. Contractor's duties and responsibilities for safety and for protection of the Work shall continue until such time as all the Work is completed and Engineer has issued a notice to Owner and Contractor in accordance with Paragraph 14.07.B that the Work is acceptable (except as otherwise expressly provided in connection with Substantial Completion).

6.14 *Safety Representative*

A. Contractor shall designate a qualified and experienced safety representative at the Site whose duties and responsibilities shall be the prevention of accidents and the maintaining and supervising of safety precautions and programs.

6.15 *Hazard Communication Programs*

A. Contractor shall be responsible for coordinating any exchange of material safety data sheets or other hazard communication information required to be made available to or exchanged between or among employers at the Site in accordance with Laws or Regulations.

6.16 *Emergencies*

A. In emergencies affecting the safety or protection of persons or the Work or property at the Site or adjacent thereto, Contractor is obligated to act to prevent threatened damage, injury, or loss. Contractor shall give Engineer and Owner prompt written notice if Contractor believes that any significant changes in the Work or variations from the Contract Documents have been caused thereby or are required as a result thereof. If Owner determines that a change in the Contract Documents is required because of the action taken by Contractor in response to such an emergency, a Work Change Directive or Change Order will be issued.

6.17 *Shop Drawings and Samples*

A. Contractor shall submit Shop Drawings and Samples to Engineer for review and approval in accordance with the accepted Schedule of Submittals (as required by Paragraph 2.07). Each submittal will be identified as Engineer may require.

1. *Shop Drawings:*

a. Submit number of copies specified in the General Requirements.

b. Data shown on the Shop Drawings will be complete with respect to quantities, dimensions, specified performance and design criteria, materials, and similar data to show Engineer the services, materials, and equipment Contractor proposes to provide and to enable Engineer and Owner to review the information for the limited purposes required by Paragraph 6.17.D.

2. *Samples:*

a. Submit number of Samples specified in the Specifications.

b. Clearly identify each Sample as to material, Supplier, pertinent data such as catalog numbers, the use for which intended and other data as Engineer or Owner may require to enable Engineer to review the submittal for the limited purposes required by Paragraph 6.17.D.

B. Where a Shop Drawing or Sample is required by the Contract Documents or the Schedule of Submittals, any related Work performed prior to Engineer's and Owner's review and approval of the pertinent submittal will be at the sole expense and responsibility of Contractor.

C. *Submittal Procedures:*

1. Before submitting each Shop Drawing or Sample, Contractor shall have:

a. reviewed and coordinated each Shop Drawing or Sample with other Shop Drawings and Samples and with the requirements of the Work and the Contract Documents;

b. determined and verified all field measurements, quantities, dimensions, specified performance and design criteria, installation requirements, materials, catalog numbers, and similar information with respect thereto;

c. determined and verified the suitability of all materials offered with respect to the indicated application, fabrication, shipping, handling, storage, assembly, and installation pertaining to the performance of the Work; and

d. determined and verified all information relative to Contractor's responsibilities for means, methods, techniques, sequences, and procedures of construction, and safety precautions and programs incident thereto.

2. Each submittal shall bear a stamp or specific written certification that Contractor has satisfied Contractor's obligations under the Contract Documents with respect to Contractor's review and approval of that submittal.

3. With each submittal, Contractor shall give Owner specific written notice of any variations that the Shop Drawing or Sample may have from the requirements of the Contract Documents. This notice shall be both a written communication separate from the Shop Drawings or Sample submittal; and, in addition, by a specific notation made on each Shop Drawing or Sample submitted to Owner for review and approval of each such variation.

D. *Engineer's Review:*

1. Engineer will provide timely review of Shop Drawings and Samples in accordance with the Schedule of Submittals acceptable to Owner. Engineer's review and approval will not bind the Owner and only Owner may determine if the items covered by the submittals will, after installation or incorporation in the Work, conform to the information given in the Contract Documents and be compatible with the design concept of the completed Project as a functioning whole as indicated by the Contract Documents.

2. Engineer's review will not extend to means, methods, techniques, sequences, or procedures of construction (except where a particular means, method, technique, sequence, or procedure of construction is specifically and expressly called for by the Contract Documents) or to safety precautions or programs incident thereto. The review and approval of a separate item as such will not indicate approval of the assembly in which the item functions. Owner may use Engineer's review in coming to any determination of acceptance.

3. Owner's and Engineer's reviews and approvals shall not relieve Contractor from responsibility for any variation from the requirements of the Contract Documents unless Contractor has complied with the requirements of Paragraph 6.17.C.3 and Owner has given written approval of each such variation by specific written notation thereof incorporated in or accompanying the Shop Drawing or Sample. Neither Owner's nor Engineer's review and approval shall relieve Contractor from responsibility for complying with the requirements of Paragraph 6.17.C.1.

E. *Resubmittal Procedures:*

1. Contractor shall make corrections required by Engineer and shall return the required number of corrected copies of Shop Drawings and submit, as required, new Samples for review and approval. Contractor shall direct specific attention in writing to revisions other than the corrections called for by Engineer on previous submittals.

2. Once preliminarily approved by Engineer, all Shop Drawings and Samples must be approved by Owner in writing.

6.18 *Continuing the Work*

A. Contractor shall carry on the Work and adhere to the Progress Schedule during all disputes or disagreements with Owner. No Work shall be delayed or postponed pending resolution of any disputes or disagreements, except as permitted by Paragraph 15.04 or as Owner and Contractor may otherwise agree in writing.

6.19 *Contractor's General Warranty and Guarantee*

A. Contractor warrants and guarantees to Owner that all Work will be completed in a good and workmanlike manner in accordance with the Contract Documents and consistent with industry standards so as to pass without exception in the trade and further all such Work and will be free from defects. Engineer and its officers, directors, members, partners, employees, agents, consultants, and subcontractors shall be entitled to rely on representation of Contractor's warranty and guarantee.

B. Contractor's warranty and guarantee hereunder excludes defects or damage caused by:

1. abuse, modification, or improper maintenance or operation by persons other than Contractor, Subcontractors, Suppliers, or any other individual or entity for whom Contractor is responsible; or

2. normal wear and tear under normal usage.

C. Contractor's obligation to perform and complete the Work in accordance with the Contract Documents shall be absolute. None of the following will constitute an acceptance of Work that is not in accordance with the Contract Documents or a release of Contractor's obligation to perform the Work in accordance with the Contract Documents:

1. observations by Engineer;

2. recommendation by Engineer or payment by Owner of any progress or final payment;

3. the issuance of a certificate of Substantial Completion by Owner or any payment related thereto by Owner;

4. use or occupancy of the Work or any part thereof by Owner;

5. any review and approval of a Shop Drawing or Sample submittal or the issuance of a notice of acceptability by Owner and Engineer;

6. any inspection, test, or approval by others; or

7. any correction of defective Work by Owner.

D. The warranty period on all labor and materials being a part of the Work shall be 36 calendar months from the date of final completion. No warranty period time limit shall apply to Work which was defective at the time of Final Completion, as in the case of latent non-conformities.

6.20 *Indemnification*

A. To the fullest extent permitted by Laws and Regulations, Contractor shall indemnify and hold harmless Owner and Engineer, and the officers, directors, members, partners, employees, agents, consultants and subcontractors of each and any of them from and against all claims, costs, losses, and damages (including but not limited to all fees and charges of engineers, architects, attorneys, and other professionals and all court or arbitration or other dispute resolution costs) arising out of or relating to the performance of the Work, provided that any such claim, cost, loss, or damage is attributable to bodily injury, sickness, disease, or death, or to injury to or destruction of tangible property (other than the Work itself), including the loss of use resulting therefrom but only to the extent caused by any negligent act or omission of Contractor, any Subcontractor, any Supplier, or any individual or entity directly or indirectly employed by any of them to perform any of the Work or anyone for whose acts any of them may be liable .

B. In any and all claims against Owner or Engineer or any of their officers, directors, members, partners, employees, agents, consultants, or subcontractors by any employee (or the survivor or personal representative of such employee) of Contractor, any Subcontractor, any Supplier, or any individual or entity directly or indirectly employed by any of them to perform any of the Work, or anyone for whose acts any of them may be liable, the indemnification obligation under Paragraph 6.20.A shall not be limited in any way by any limitation on the amount or type of damages, compensation, or benefits payable by or for Contractor or any such Subcontractor, Supplier, or other individual or entity under workers' compensation acts, disability benefit acts, or other employee benefit acts.

C. The indemnification obligations of Contractor under Paragraph 6.20.A shall not extend to the liability of Engineer and Engineer's officers, directors, members, partners, employees, agents, consultants and subcontractors arising out of:

1. the preparation or approval of, or the failure to prepare or approve maps, Drawings, opinions, reports, surveys, Change Orders, designs, or Specifications; or

2. giving directions or instructions, or failing to give them, if that is the primary cause of the injury or damage.

6.21 *Delegation of Professional Design Services*

A. Contractor will not be required to provide professional design services unless such services are specifically required by the Contract Documents for a portion of the Work or unless such services are required to carry out Contractor's responsibilities for construction means, methods, techniques, sequences and procedures. Contractor shall not be required to provide professional services in violation of applicable law.

B. If professional design services or certifications by a design professional related to systems, materials or equipment are specifically required of Contractor by the Contract Documents, Owner and Engineer will specify all performance and design criteria that such services must

satisfy. Contractor shall cause such services or certifications to be provided by a properly licensed professional, whose signature and seal shall appear on all drawings, calculations, specifications, certifications, Shop Drawings and other submittals prepared by such professional. Shop Drawings and other submittals related to the Work designed or certified by such professional, if prepared by others, shall bear such professional's written approval when submitted to Engineer.

C. Owner and Engineer shall be entitled to rely upon the adequacy, accuracy and completeness of the services, certifications or approvals performed by such design professionals, provided Owner and Engineer have specified to Contractor all performance and design criteria that such services must satisfy.

D. Pursuant to this Paragraph 6.21, Engineer's review and approval of design calculations and design drawings will be only for the limited purpose of checking for conformance with performance and design criteria given and the design concept expressed in the Contract Documents. Engineer's review and approval of Shop Drawings and other submittals (except design calculations and design drawings) will be only for the purpose stated in Paragraph 6.17.D.1.

E. Contractor shall not be responsible for the adequacy of the performance or design criteria required by the Contract Documents.

ARTICLE 7 – OTHER WORK AT THE SITE

7.01 *Related Work at Site*

A. Owner may perform other work related to the Project at the Site with Owner's employees, or through other direct contracts therefore, or have other work performed by utility owners. If such other work is not noted in the Contract Documents, then:

1. If OWNER considers such other work to be of such a nature as to be likely to cause interference with the CONTRACTOR's performance of the Work, CONTRACTOR shall be notified prior to starting other work. If CONTRACTOR considers any other work proposed to be performed, or work being performed by the OWNER, to be of such a nature as to be likely to cause interference with the CONTRACTOR's performance of the Work, CONTRACTOR shall provide written notice of such. OWNER shall respond to such notice within 7 working days of receipt.

2. If Owner and Contractor are unable to agree on entitlement to or on the amount or extent, if any, of any adjustment in the Contract Price or Contract Times that should be allowed as a result of such other work, a Claim may be made therefore as provided in Paragraph 10.05.

B. Contractor shall afford each other contractor who is a party to such a direct contract, each utility owner, and Owner, if Owner is performing other work with Owner's employees, proper and safe access to the Site, provide a reasonable opportunity for the introduction and storage of materials and equipment and the execution of such other work, and properly coordinate the Work with theirs. Contractor shall do all cutting, fitting, and patching of the Work that may be required to properly connect or otherwise make its several parts come together and properly integrate with such other work. Contractor shall not endanger any work of others by cutting,

excavating, or otherwise altering such work; provided, however, that Contractor may cut or alter others' work with the written consent of Engineer and the others whose work will be affected. The duties and responsibilities of Contractor under this Paragraph are for the benefit of such utility owners and other contractors to the extent that there are comparable provisions for the benefit of Contractor in said direct contracts between Owner and such utility owners and other contractors.

C. If the proper execution or results of any part of Contractor's Work depends upon work performed by others under this Article 7, Contractor shall inspect such other work and promptly report to Engineer in writing any delays, defects, or deficiencies in such other work that render it unavailable or unsuitable for the proper execution and results of Contractor's Work. Contractor's failure to so report will constitute an acceptance of such other work as fit and proper for integration with Contractor's Work except for latent defects and deficiencies in such other work.

7.02 *Coordination*

A. If Owner intends to contract with others for the performance of other work on the Project at the Site, the following will be set forth in Supplementary Conditions:

1. the individual or entity who will have authority and responsibility for coordination of the activities among the various contractors will be identified;

2. the specific matters to be covered by such authority and responsibility will be itemized; and

3. the extent of such authority and responsibilities will be provided.

B. Unless otherwise provided in the Supplementary Conditions, Owner shall have sole authority and responsibility for such coordination.

7.03 *Legal Relationships*

A. Paragraphs 7.01.A and 7.02 are not applicable for utilities not under the control of Owner.

B. Each other direct contract of Owner under Paragraph 7.01.A shall provide that the other contractor is liable to Owner and Contractor for the reasonable direct delay and disruption costs incurred by Contractor as a result of the other contractor's wrongful actions or inactions.

C. Contractor shall be liable to Owner and any other contractor under direct contract to Owner for the reasonable direct delay and disruption costs incurred by such other contractor as a result of Contractor's wrongful action or inactions.

ARTICLE 8 – OWNER'S RESPONSIBILITIES

8.01 *Communications to Contractor*

A. Except as otherwise provided in these General Conditions, Owner may issue communications to Contractor directly or through Engineer.

8.02 *Replacement of Engineer*

A. In case of termination of the employment of Engineer, Owner shall appoint an engineer to whom Contractor makes no reasonable objection, whose status under the Contract Documents shall be that of the former Engineer.

8.03 *Furnish Data*

A. Owner shall promptly furnish the data required of Owner under the Contract Documents.

8.04 *Pay When Due*

A. Owner shall make payments to Contractor when they are due as provided in Paragraphs 14.02.C and 14.07.C.

8.05 *Lands and Easements; Reports and Tests*

A. Owner's duties with respect to providing lands and easements and providing engineering surveys to establish reference points are set forth in Paragraphs 4.01 and 4.05. Paragraph 4.02 refers to Owner's identifying and making available to Contractor copies of reports of explorations and tests of subsurface conditions and drawings of physical conditions relating to existing surface or subsurface structures at the Site.

8.06 *Insurance*

A. Owner's responsibilities, if any, with respect to purchasing and maintaining liability and property insurance are set forth in Article 5.

8.07 *Change Orders*

A. Owner is obligated to execute Change Orders as indicated in Paragraph 10.03.

8.08 *Inspections, Tests, and Approvals*

A. Owner's responsibility with respect to certain inspections, tests, and approvals is set forth in Paragraph 13.03.B.

8.09 *Limitations on Owner's Responsibilities*

A. The Owner shall not supervise, direct, or have control or authority over, nor be responsible for, Contractor's means, methods, techniques, sequences, or procedures of construction, or the safety precautions and programs incident thereto, or for any failure of Contractor to comply with Laws and Regulations applicable to the performance of the Work. Owner will not be responsible for Contractor's failure to perform the Work in accordance with the Contract Documents.

8.10 *Undisclosed Hazardous Environmental Condition*

A. Owner's responsibility in respect to an undisclosed Hazardous Environmental Condition is set forth in Paragraph 4.06.

8.11 *Evidence of Financial Arrangements*

A. Upon request of Contractor, Owner shall furnish Contractor reasonable evidence that financial arrangements have been made to satisfy Owner's obligations under the Contract Documents.

8.12 *Compliance with Safety Program*

A. While at the Site, Owner's employees and representatives shall comply with the specific applicable requirements of Contractor's safety programs of which Owner has been informed pursuant to Paragraph 6.13.D.

ARTICLE 9 – ENGINEER'S STATUS DURING CONSTRUCTION

9.01 *Owner's Representative*

A. The Director of Public Works or the County Administrator shall be Owner's representatives during the construction period. The duties and responsibilities and the limitations of authority of Engineer as Owner's representative during construction are set forth in the Contract Documents.

9.02 *Visits to Site*

A. Engineer and Owner's Representatives will make visits to the Site at intervals appropriate to the various stages of construction as Engineer deems necessary in order to observe as an experienced and qualified design professional the progress that has been made and the quality of the various aspects of Contractor's executed Work. Based on information obtained during such visits and observations, Engineer, for the benefit of Owner, will determine, in general, if the Work is proceeding in accordance with the Contract Documents. Engineer will not be required to make exhaustive or continuous inspections on the Site to check the quality or quantity of the Work. Engineer's efforts will be directed toward providing for Owner a greater degree of confidence that the completed Work will conform generally to the Contract Documents. On the basis of such visits and observations, Engineer will keep Owner informed of the progress of the Work and will endeavor to guard Owner against defective Work.

B. Engineer's visits and observations are subject to all the limitations on Engineer's authority and responsibility set forth in Paragraph 9.09. Particularly, but without limitation, during or as a result of Engineer's visits or observations of Contractor's Work, Engineer will not supervise, direct, control, or have authority over or be responsible for Contractor's means, methods, techniques, sequences, or procedures of construction, or the safety precautions and programs incident thereto, or for any failure of Contractor to comply with Laws and Regulations applicable to the performance of the Work.

9.03 *Project Representative*

A. OWNER will furnish full-time inspection services for extensive observation of the Work. The responsibilities and authority and limitations of the OWNER's inspector shall be as set forth in the Contract Documents for the OWNER.

9.04 *Authorized Variations in Work*

A. Only Owner may authorize a variation in the Work, even minor variations in the Work from the requirements of the Contract Documents which do not involve an adjustment in the Contract Price or the Contract Times and are compatible with the design concept of the completed Project as a functioning whole as indicated by the Contract Documents. These may be accomplished by a Field Order and will be binding on Owner only if signed by the Owner and in such cases Contractor shall perform the Work involved promptly. If Owner or Contractor believes that a Field Order justifies an adjustment in the Contract Price or Contract Times, or both, and the parties are unable to agree on entitlement to or on the amount or extent, if any, of any such adjustment, a Claim may be made therefor as provided in Paragraph 10.05.

9.05 *Rejecting Defective Work*

A. Only Owner will have authority to reject Work which Owner believes to be defective, or that Owner believes will not produce a completed Project that conforms to the Contract Documents or that will prejudice the integrity of the design concept of the completed Project as a functioning whole as indicated by the Contract Documents. Owner or Engineer will also have authority to require special inspection or testing of the Work as provided in Paragraph 13.04, whether or not the Work is fabricated, installed, or completed.

9.06 *Shop Drawings, Change Orders and Payments*

A. In connection with Engineer's authority, and limitations thereof, as to Shop Drawings and Samples, see Paragraph 6.17.

B. In connection with Engineer's authority, and limitations thereof, as to design calculations and design drawings submitted in response to a delegation of professional design services, if any, see Paragraph 6.21.

C. In connection with Engineer's authority as to Change Orders, see Articles 10, 11, and 12.

D. In connection with Engineer's authority as to Applications for Payment, see Article 14.

9.07 *Determinations for Unit Price Work*

A. Owner, with Engineer's guidance which shall not be binding on Owner, will determine the actual quantities and classifications of Unit Price Work performed by Contractor. Engineer will review with Owner the Engineer's preliminary determinations on such matters and render a written decision thereon (by recommendation of an Application for Payment or otherwise) only if requested to do so by the Owner. Owner's written decision thereon will be final and binding, subject to the provisions of Paragraph 10.05.

9.08 *Decisions on Requirements of Contract Documents and Acceptability of Work*

A. Only Owner may interpret requirements of the Contract Documents and judge of the acceptability of the Work thereunder. All matters in question and other matters between Owner and Contractor arising prior to the date final payment is due relating to the acceptability of the Work, and the interpretation of the requirements of the Contract Documents pertaining to the

performance of the Work, will be referred to the Owner and Engineer in writing within 30 days of the event giving rise to the question.

B. Engineer will, with reasonable promptness, render a written decision on the issue referred if so requested to do so by the Owner, but only the Owner's written decision shall control. If Owner or Contractor believes that any such decision entitles them to an adjustment in the Contract Price or Contract Times or both, a Claim may be made under Paragraph 10.05.

C. Owner's written decision on the issue referred will be final and binding on Owner and Contractor, subject to the provisions of Paragraph 10.05.

9.09 *Limitations on Engineer's Authority and Responsibilities*

A. Neither Engineer's authority or responsibility under this Article 9 or under any other provision of the Contract Documents nor any decision made by Engineer in good faith either to exercise or not exercise such authority or responsibility or the undertaking, exercise, or performance of any authority or responsibility by Engineer shall create, impose, or give rise to any duty in contract, tort, or otherwise owed by Engineer to Contractor, any Subcontractor, any Supplier, any other individual or entity, or to any surety for or employee or agent of any of them.

B. Engineer will not supervise, direct, control, or have authority over or be responsible for Contractor's means, methods, techniques, sequences, or procedures of construction, or the safety precautions and programs incident thereto, or for any failure of Contractor to comply with Laws and Regulations applicable to the performance of the Work. Engineer will not be responsible for Contractor's failure to perform the Work in accordance with the Contract Documents.

C. Engineer will not be responsible for the acts or omissions of Contractor or of any Subcontractor, any Supplier, or of any other individual or entity performing any of the Work.

D. Engineer's review of the final Application for Payment and accompanying documentation and all maintenance and operating instructions, schedules, guarantees, bonds, certificates of inspection, tests and approvals, and other documentation required to be delivered by Paragraph 14.07.A will only be to determine generally that their content complies with the requirements of, and in the case of certificates of inspections, tests, and approvals that the results certified indicate compliance with, the Contract Documents; and such review will not be binding on the Owner.

E. The limitations upon authority and responsibility set forth in this Paragraph 9.09 shall also apply to the Resident Project Representative, if any, and assistants, if any.

9.10 *Compliance with Safety Program*

A. While at the Site, Engineer's employees and representatives shall comply with the specific applicable requirements of Contractor's safety programs of which Engineer has been informed pursuant to Paragraph 6.13.D.

ARTICLE 10 – CHANGES IN THE WORK; CLAIMS

10.01 *Authorized Changes in the Work*

A. Without invalidating the Contract and without notice to any surety, Owner may, at any time or from time to time, order additions, deletions, or revisions in the Work by a signed written Change Order, or a Work Change Directive. Upon receipt of any such document, Contractor shall promptly proceed with the Work involved which will be performed under the applicable conditions of the Contract Documents (except as otherwise specifically provided).

B. If Owner and Contractor are unable to agree on entitlement to, or on the amount or extent, if any, of an adjustment in the Contract Price or Contract Times, or both, that should be allowed as a result of a Work Change Directive, a Claim may be made therefor as provided in Paragraph 10.05.

10.02 *Unauthorized Changes in the Work*

A. Contractor shall not be entitled to an increase in the Contract Price or an extension of the Contract Times with respect to any work performed that is not required by the Contract Documents as amended, modified, or supplemented as provided in Paragraph 3.04.

10.03 *Execution of Change Orders*

A. Owner and Contractor may enter into written Change Orders from time to time covering:

1. changes in the Work which are: (i) ordered by Owner pursuant to Paragraph 10.01.A, (ii) required because of acceptance of defective Work under Paragraph 13.08.A or Owner's correction of defective Work under Paragraph 13.09, or (iii) agreed to by the parties;

2. changes in the Contract Price or Contract Times which are agreed to by the parties, including any undisputed sum or amount of time for Work actually performed in accordance with a Work Change Directive; and

3. changes in the Contract Price or Contract Times; provided that, in lieu of executing any such Change Order, a claim may be pursued under 10.05.

10.04 *Notification to Surety*

A. If the provisions of any bond require notice to be given to a surety of any change affecting the general scope of the Work or the provisions of the Contract Documents (including, but not limited to, Contract Price or Contract Times), the giving of any such notice will be Contractor's responsibility. The amount of each applicable bond will be adjusted to reflect the effect of any such change.

10.05 *Claims*

A. *Claim's Act*: If a Claim cannot be resolved under 10.05(B) and (C) below, then the following provisions applies to such Claims. Contractor shall notify Owner in writing of any Claims hereunder consistent with Section 65 of the County's General Terms, except those waived pursuant to Paragraph 14.09. The County shall respond to all Claims, except those waived

pursuant to Paragraph 14.09, if and as required by Section 65 of the County's General Terms. If Owner has a Claim against Contractor hereunder, then the Owner may pursue any rights or remedies it may have under the Contract Documents or by Laws and Regulations in respect of such Claims or law, equity or otherwise.

B. *Notice:* Written notice stating the general nature of each Claim shall be delivered by the claimant to the other party to the Contract. Notice of the amount or extent of the Claim, with supporting data shall be delivered to the other party to the Contract within 60 days after the start of such event. A Claim for an adjustment in Contract Price shall be prepared in accordance with the provisions of Paragraph 12.01.B. A Claim for an adjustment in Contract Times shall be prepared in accordance with the provisions of Paragraph 12.02.B. Each Claim shall be accompanied by claimant's written statement that the adjustment claimed is the entire adjustment to which the claimant believes it is entitled as a result of said event. The opposing party shall submit any response to the claimant within 30 days after receipt of the claimant's last submittal.

C. *The other side will* review each Claim and, within 30 days after receipt of the last submittal of the claimant or the last submittal of the opposing party, if any, take one of the following actions in writing:

1. deny the Claim in whole or in part;

2. approve the Claim; or

3. notify the other party that more information is need to determine approval or denial of the Claim.

D. No Claim by Contractor for an adjustment in Contract Price or Contract Times will be valid if not submitted in accordance with this Paragraph 10.05.

ARTICLE 11 – COST OF THE WORK; ALLOWANCES; UNIT PRICE WORK

11.01 *Cost of the Work*

A. *Costs Included:* The term Cost of the Work means the sum of any and all costs reasonably or necessarily incurred and paid by Contractor in the proper performance of the Work and the parties agree that the full Cost of Work is included in the Contract Price set forth in the Agreement. Notwithstanding any provision of these General Requirements, the total payments made by Owner to Contractor cannot exceed the Contract Price unless the parties execute of a valid written modification, amendment or change order specifically modifying the Contract Price which is signed by the Owner. The costs set forth in Paragraph 11.01.B shall not be charged to the Owner under any circumstances and cannot be factored into the Cost of the Work. The value of any Work covered by a Change Order or when a Claim for an adjustment in Contract Price cannot exceed the Cost of the Work; and the costs to be paid to Contractor will be only those additional or incremental costs required because of the change in the Work or because of the event giving rise to the Claim and further shall only be those costs agreed to by the Owner in writing. In addition, any such costs shall be in amounts no higher than those prevailing in the locality of the Project, shall not include any of the costs itemized in Paragraph 11.01.B, and may include only the following items:

1. Payroll costs for employees in the direct employ of Contractor in the performance of the Work under schedules of job classifications agreed upon by Owner and Contractor. Such employees shall include, without limitation, superintendents, foremen, and other personnel employed full time on the Work. Payroll costs for employees not employed full time on the Work shall be apportioned on the basis of their time spent on the Work. Payroll costs shall include, but not be limited to, salaries and wages plus the cost of fringe benefits, which shall include social security contributions, unemployment, excise, and payroll taxes, workers' compensation, health and retirement benefits, bonuses, sick leave, vacation and holiday pay applicable thereto. The expenses of performing Work outside of regular working hours, on Saturday, Sunday, or legal holidays, shall be included in the above to the extent authorized by Owner.

2. Cost of all materials and equipment furnished and incorporated in the Work, including costs of transportation and storage thereof, and Suppliers' field services required in connection therewith. All cash discounts shall accrue to Contractor unless Owner deposits funds with Contractor with which to make payments, in which case the cash discounts shall accrue to Owner. All trade discounts, rebates and refunds and returns from sale of surplus materials and equipment shall accrue to Owner, and Contractor shall make provisions so that they may be obtained.

3. Payments made by Contractor to Subcontractors for Work performed by Subcontractors. If required by Owner, Contractor shall obtain competitive bids from subcontractors acceptable to Owner and Contractor and shall deliver such bids to Owner, who will then determine, with the advice of Engineer, which bids, if any, will be acceptable. If any subcontract provides that the Subcontractor is to be paid on the basis of Cost of the Work plus a fee, the Subcontractor's Cost of the Work and fee shall be determined in the same manner as Contractor's Cost of the Work and fee as provided in this Paragraph 11.01.

4. Costs of special consultants (including but not limited to engineers, architects, testing laboratories, surveyors, attorneys, and accountants) employed for services specifically related to the Work.

5. Supplemental costs including the following:

    a. The proportion of necessary transportation, travel, and subsistence expenses of Contractor's employees incurred in discharge of duties connected with the Work.

    b. Cost, including transportation and maintenance, of all materials, supplies, equipment, machinery, appliances, office, and temporary facilities at the Site, and hand tools not owned by the workers, which are consumed in the performance of the Work, and cost, less market value, of such items used but not consumed which remain the property of Contractor.

    c. Rentals of all construction equipment and machinery, and the parts thereof whether rented from Contractor or others in accordance with rental agreements approved by Owner with the advice of Engineer, and the costs of transportation, loading, unloading, assembly, dismantling, and removal thereof. All such costs shall be in accordance with the terms of said rental agreements. The rental of any such equipment, machinery, or parts shall cease when the use thereof is no longer necessary for the Work.

d. Sales, consumer, use, and other similar taxes related to the Work, and for which Contractor is liable, as imposed by Laws and Regulations.

e. Deposits lost for causes other than negligence of Contractor, any Subcontractor, or anyone directly or indirectly employed by any of them or for whose acts any of them may be liable, and royalty payments and fees for permits and licenses.

f. Losses and damages (and related expenses) caused by damage to the Work, not compensated by insurance or otherwise, sustained by Contractor in connection with the performance of the Work (except losses and damages within the deductible amounts of property insurance established in accordance with Paragraph 5.06.D), provided such losses and damages have resulted from causes other than the negligence of Contractor, any Subcontractor, or anyone directly or indirectly employed by any of them or for whose acts any of them may be liable. Such losses shall include settlements made with the written consent and approval of Owner. No such losses, damages, and expenses shall be included in the Cost of the Work for the purpose of determining Contractor's fee.

g. The cost of utilities, fuel, and sanitary facilities at the Site.

h. Minor expenses such as telegrams, long distance telephone calls, telephone service at the Site, express and courier services, and similar petty cash items in connection with the Work.

i. The costs of premiums for all bonds and insurance Contractor is required by the Contract Documents to purchase and maintain.

B. *Costs Excluded:* The term Cost of the Work shall not include any of the following items:

1. Payroll costs and other compensation of Contractor's officers, executives, principals (of partnerships and sole proprietorships), general managers, safety managers, engineers, architects, estimators, attorneys, auditors, accountants, purchasing and contracting agents, expediters, timekeepers, clerks, and other personnel employed by Contractor, whether at the Site or in Contractor's principal or branch office for general administration of the Work and not specifically included in the agreed upon schedule of job classifications referred to in Paragraph 11.01.A.1 or specifically covered by Paragraph 11.01.A.4, all of which are to be considered administrative costs covered by the Contractor's fee.

2. Expenses of Contractor's principal and branch offices other than Contractor's office at the Site.

3. Any part of Contractor's capital expenses, including interest on Contractor's capital employed for the Work and charges against Contractor for delinquent payments.

4. Costs due to the negligence of Contractor, any Subcontractor, or anyone directly or indirectly employed by any of them or for whose acts any of them may be liable, including but not limited to, the correction of defective Work, disposal of materials or equipment wrongly supplied, and making good any damage to property.

5. Other overhead or general expense costs of any kind and the costs of any item not specifically and expressly included in Paragraphs 11.01.A.

C. *Contractor's Fee:* Notwithstanding any of the foregoing, the Contractor shall in no event be paid any amounts in excess of the Contract Price, excepting only if the parties execute of a valid written modification, amendment or change order specifically modifying the Contract Price which is signed by the Owner. Contract Price is as set forth in the Agreement. When the value of any Work covered by a Change Order or when a Claim for an adjustment in Contract Price is determined on the basis of Cost of the Work, Contractor's fee shall be determined as set forth in Paragraph 12.01.C and subject to approval in advance by the Owner in Owner's sole discretion.

D. *Documentation:* Whenever the Cost of the Work for any purpose is to be determined pursuant to Paragraphs 11.01.A and 11.01.B, Contractor will establish and maintain records thereof in accordance with generally accepted accounting practices and submit in a form acceptable to Engineer an itemized cost breakdown together with supporting data.

11.02 *Allowances*

A. It is understood that Contractor has included in the Contract Price all allowances (if applicable) so named in the Contract Documents and shall cause the Work so covered to be performed for such sums and by such persons or entities as may be acceptable to Owner and Engineer as set forth in the Agreement.

B. *Cash Allowances:*

1. Contractor agrees that:

a. the cash allowances include the cost to Contractor (less any applicable trade discounts) of materials and equipment required by the allowances to be delivered at the Site, and all applicable taxes; and

b. Contractor's costs for unloading and handling on the Site, labor, installation, overhead, profit, and other expenses contemplated for the cash allowances have been included in the Contract Price and not in the allowances, and no demand for additional payment on account of any of the foregoing will be valid.

C. *Contingency Allowance:*

1. Contractor agrees that a contingency allowance, if any, is for the sole use of Owner to cover unanticipated costs.

D. Prior to final payment, an appropriate Change Order will be issued to reflect actual amounts due Contractor on account of Work covered by allowances if the Work covered by allowances would result in a savings to the Owner and a lower Contract Price, and then the Contract Price shall be correspondingly adjusted down. Engineer will consult with the Owner on a recommended adjustment down, if applicable, for allowances. Notwithstanding any other provision of these General Requirements, Allowances shall never result in an increase in the Contract Price.

11.03 *Unit Price Work*

A. Where the Contract Documents provide that all or part of the Work is to be Unit Price Work, initially the Contract Price will be deemed to include for all Unit Price Work an amount equal to the sum of the unit price for each separately identified item of Unit Price Work times the estimated quantity of each item as indicated in the Agreement.

B. The estimated quantities of items of Unit Price Work are not guaranteed and are solely for the purpose of comparison of Bids and determining an initial Contract Price. Determinations of the actual quantities and classifications of Unit Price Work performed by Contractor will be made by Owner subject to the provisions of Paragraph 9.07.

C. Each unit price will be deemed to include an amount considered by Contractor to be adequate to cover Contractor's overhead and profit for each separately identified item.

D. Owner or Contractor may make a Claim for an adjustment in the Contract Price in accordance with Paragraph 10.05 if:

1. the quantity of any item of Unit Price Work performed by Contractor differs materially and significantly from the estimated quantity of such item indicated in the Agreement; and

2. there is no corresponding adjustment with respect to any other item of Work; and

3. Contractor believes that Contractor is entitled to an increase in Contract Price as a result of having incurred additional expense do to the sole fault or negligence of Owner or Owner believes that Owner is entitled to a decrease in Contract Price and the parties are unable to agree as to the amount of any such increase or decrease.

ARTICLE 12 – CHANGE OF CONTRACT PRICE; CHANGE OF CONTRACT TIMES

12.01 *Change of Contract Price*

A. The Contract Price may only be changed by a written Change Order signed by the Owner. Any Claim for an adjustment in the Contract Price shall be based on written notice submitted by the party making the Claim to the Engineer and the other party to the Contract in accordance with the provisions of Paragraph 10.05.

B. The value of any Work covered by a Change Order or of any Claim for an adjustment in the Contract Price will be determined as follows:

1. where the Work involved is covered by unit prices contained in the Contract Documents, by application of such unit prices to the quantities of the items involved (subject to the provisions of Paragraph 11.03); or

2. where the Work involved is not covered by unit prices contained in the Contract Documents, by a mutually agreed lump sum (which may include an allowance for overhead and profit not necessarily in accordance with Paragraph 12.01.C.2).

C. *Contractor's Fee:* The Contractor's fee for overhead and profit shall be determined as follows:

1. a mutually acceptable fixed fee; or

2. at cost with no mark-up of any kind.

12.02 *Change of Contract Times*

A. The Contract Times may only be changed by a written Change Order signed by the Owner. Any Claim for an adjustment in the Contract Times shall be based on written notice submitted by the party making the Claim to the Engineer and the other party to the Contract in accordance with the provisions of Paragraph 10.05.

B. Any adjustment of the Contract Times covered by a Change Order or any Claim for an adjustment in the Contract Times will be determined in accordance with the provisions of this Article 12.

12.03 *Delays*

A. Where Contractor is prevented from completing any part of the Work within the Contract Times due to delay beyond the reasonable control of Contractor, the Contract Times will be extended in an amount equal to the time lost due to such delay if a Claim is made therefor within no more than ten (10) days of such delay as provided in Paragraph 12.02.A. Delays beyond the control of Contractor are limited to the willful misconduct or gross negligence of Owner, acts or neglect of utility owners or other contractors performing other work as contemplated by Article 7, fires, floods, epidemics, abnormal weather conditions, or acts of God.

B. If Owner, Engineer, or other contractors or utility owners performing other work for Owner as contemplated by Article 7, or anyone for whom Owner is responsible, delays, disrupts, or interferes with the performance or progress of the Work, then Contractor may be entitled to an equitable adjustment in the Contract Price or the Contract Times, or both, and may submit a Claim to Owner for the same. Owner shall only have to consider a request from Contractor for an adjustment of the Contract Times if it is essential to Contractor's ability to complete the Work within the Contract Times.

C. If Contractor is delayed in the performance or progress of the Work by fire, flood, epidemic, abnormal weather conditions, acts of God, acts or failures to act of utility owners not under the control of Owner, or other causes not the fault of and beyond the reasonable control of Owner and Contractor, then Contractor may be entitled to an equitable adjustment in Contract Times, if such adjustment is essential to Contractor's ability to complete the Work within the Contract Times. Such an adjustment shall be Contractor's sole and exclusive remedy for the delays described in this Paragraph 12.03.C.

D. Owner, Engineer, and their officers, directors, members, partners, employees, agents, consultants, or subcontractors shall not be liable to Contractor for any claims, costs, losses, or damages (including but not limited to all fees and charges of engineers, architects, attorneys, and other professionals and all court or arbitration or other dispute resolution costs) sustained by Contractor on or in connection with any other project or anticipated project.

E. Contractor shall not be entitled to an adjustment in Contract Price or Contract Times for delays within the control of Contractor. Delays attributable to and within the control of a Subcontractor or Supplier shall be deemed to be delays within the control of Contractor.

F. When establishing the contract time, an allowance will be made for four (4) calendar days of work lost per month due to inclement weather conditions. The CONTRACTOR, at the time of each periodic pay request, shall submit to the ENGINEER and OWNER for approval a list of all working days lost due to either inclement weather or site conditions caused by inclement weather for the period. Accompanying his list should be a summary of the specific conditions which caused the loss. This request will be reviewed by the ENGINEER in light of observations made by the ENGINEER and resident inspector. Approval of the periodic payment estimate by the ENGINEER, OWNER, and Agency will also include approval of the weather delay request. After substantial completion, and not until then, a change order must be executed if a time extension for weather related delays is requested by the CONTRACTOR. The time extension must be based solely on the time requested within the periodic payment estimates. Subtracted from this time will be the four (4) days per month allowance assumed in the contract. There cannot be a decrease in contract length if the allowance for inclement weather exceeds the actual number of days lost due to inclement weather. To convert working days into calendar days, multiply the working days by seven (7) and divide by the number of working days in a typical work week.

ARTICLE 13 – TESTS AND INSPECTIONS; CORRECTION, REMOVAL OR ACCEPTANCE OF DEFECTIVE WORK

13.01 *Notice of Defects*

A. Prompt notice of all defective Work of which Owner or Engineer has actual knowledge will be given to Contractor. Defective Work may be rejected, corrected, or accepted as provided in this Article 13.

B. Owner's failure to notify Contractor of any Defective Work is not a waiver of any claims of actions Owner may have against Contractor relating thereto.

13.02 *Access to Work*

A. Owner, Engineer, their consultants and other representatives and personnel of Owner, independent testing laboratories, and governmental agencies with jurisdictional interests will have access to the Site and the Work at reasonable times for their observation, inspection, and testing. Contractor shall provide them proper and safe conditions for such access and advise them of Contractor's safety procedures and programs so that they may comply therewith as applicable.

13.03 *Tests and Inspections*

A. Contractor shall give Engineer timely notice of readiness of the Work for all required inspections, tests, or approvals and shall cooperate with inspection and testing personnel to facilitate required inspections or tests.

B. Owner shall employ and pay for the services of an independent testing laboratory to perform all inspections, tests, or approvals required by the Contract Documents except:

1. for inspections, tests, or approvals covered by Paragraphs 13.03.C and 13.03.D below;

2. that costs incurred in connection with tests or inspections conducted pursuant to Paragraph 13.04.B shall be paid as provided in Paragraph 13.04.C; and

3. as otherwise specifically provided in the Contract Documents.

C. If Laws or Regulations of any public body having jurisdiction require any Work (or part thereof) specifically to be inspected, tested, or approved by an employee or other representative of such public body, Contractor shall assume full responsibility for arranging and obtaining such inspections, tests, or approvals, pay all costs in connection therewith, and furnish Engineer the required certificates of inspection or approval.

D. Contractor shall be responsible for arranging and obtaining and shall pay all costs in connection with any inspections, tests, or approvals required for Owner's and Engineer's acceptance of materials or equipment to be incorporated in the Work; or acceptance of materials, mix designs, or equipment submitted for approval prior to Contractor's purchase thereof for incorporation in the Work. Such inspections, tests, or approvals shall be performed by organizations acceptable to Owner and Engineer.

E. If any Work (or the work of others) that is to be inspected, tested, or approved is covered by Contractor without written concurrence of Engineer and Owner, Contractor shall, if requested by Engineer or Owner, uncover such Work for observation.

F. Uncovering Work as provided in Paragraph 13.03.E shall be at Contractor's expense unless Contractor has given Engineer and Owner timely notice of Contractor's intention to cover the same and neither Owner nor Engineer has not acted with reasonable promptness in response to such notice. If Owner or Engineer responds within fourteen (14) days of receipt of Contractor's notice, such response is per se prompt.

13.04 *Uncovering Work*

A. If any Work is covered contrary to the written request of Engineer or Owner, it must, if requested by Engineer or Owner, be uncovered for Engineer's or Owner's observation and replaced at Contractor's expense.

1. Whether or not the uncovered Work is found to be defective, CONTRACTOR shall pay all claims, costs, losses, and damages as indicated in Paragraph 13.04.B.1.

B. If Owner considers it necessary or advisable that covered Work be observed by Owner or inspected or tested by others, Contractor, at Owner's request, shall uncover, expose, or otherwise make available for observation, inspection, or testing as Owner may require, that portion of the Work in question, furnishing all necessary labor, material, and equipment.

1. If it is found that the uncovered Work is defective, Contractor shall pay all claims, costs, losses, and damages (including but not limited to all fees and charges of engineers, architects, attorneys, and other professionals and all court or arbitration or other dispute resolution costs) arising out of or relating to such uncovering, exposure, observation, inspection, and testing, and of satisfactory replacement or reconstruction (including but not limited to all costs of repair or replacement of work of others); and Owner shall be entitled

to an appropriate decrease in the Contract Price. If the parties are unable to agree as to the amount thereof, Owner may make a Claim therefor as provided in Paragraph 10.05.

2. If the uncovered Work is not found to be defective, Contractor may request an increase in the Contract Price or an extension of the Contract Times, or both, directly attributable to such uncovering, exposure, observation, inspection, testing, replacement, and reconstruction. If the parties are unable to agree as to the amount or extent thereof, Contractor may make a Claim therefor as provided in Paragraph 10.05.

13.05 *Owner May Stop the Work*

A. If the Work is defective, or Contractor fails to supply sufficient skilled workers or suitable materials or equipment, or fails to perform the Work in such a way that the completed Work will conform to the Contract Documents, Owner may order Contractor to stop the Work, or any portion thereof, until the cause for such order has been eliminated; however, this right of Owner to stop the Work shall not give rise to any duty on the part of Owner to exercise this right for the benefit of Contractor, any Subcontractor, any Supplier, any other individual or entity, or any surety for, or employee or agent of any of them.

13.06 *Correction or Removal of Defective Work*

A. Promptly after receipt of written notice, Contractor shall correct all defective Work, whether or not fabricated, installed, or completed, or, if the Work has been rejected by Owner, remove it from the Project and replace it with Work that is not defective. Contractor shall pay all claims, costs, losses, and damages (including but not limited to all fees and charges of engineers, architects, attorneys, and other professionals and all court or arbitration or other dispute resolution costs) arising out of or relating to such correction or removal (including but not limited to all costs of repair or replacement of work of others).

B. When correcting defective Work under the terms of this Paragraph 13.06 or Paragraph 13.07, Contractor shall take no action that would void or otherwise impair Owner's special warranty and guarantee, if any, on said Work.

13.07 *Correction Period*

A. If within three years after the date of Final Completion (or such longer period of time as may be prescribed by the terms of any applicable special guarantee required by the Contract Documents) or by any specific provision of the Contract Documents, any Work is found to be defective, or if the repair of any damages to the land or areas made available for Contractor's use by Owner or permitted by Laws and Regulations as contemplated in Paragraph 6.11.A is found to be defective, Contractor shall promptly, without cost to Owner and in accordance with Owner's written instructions:

1. repair such defective land or areas; or

2. correct such defective Work; or

3. if the defective Work has been rejected by Owner, remove it from the Project and replace it with Work that is not defective, and

4. satisfactorily correct or repair or remove and replace any damage to other Work, to the work of others or other land or areas resulting therefrom.

B. If Contractor does not promptly comply with the terms of Owner's written instructions, or in an emergency where delay would cause serious risk of loss or damage, Owner may have the defective Work corrected or repaired or may have the rejected Work removed and replaced. All claims, costs, losses, and damages (including but not limited to all fees and charges of engineers, architects, attorneys, and other professionals and all court or arbitration or other dispute resolution costs) arising out of or relating to such correction or repair or such removal and replacement (including but not limited to all costs of repair or replacement of work of others) will be paid by Contractor.

C. In special circumstances where a particular item of equipment is placed in continuous service before Final Completion of all the Work, the correction period for that item may will still start to run from Final Completion.

D. Where defective Work (and damage to other Work resulting therefrom) has been corrected or removed and replaced under this Paragraph 13.07, the correction period hereunder with respect to such Work will be extended for an additional period of three years after such correction or removal and replacement has been satisfactorily completed.

E. Contractor's obligations under this Paragraph 13.07 are in addition to any other obligation or warranty. The provisions of this Paragraph 13.07 shall not be construed as a substitute for, or a waiver of, the provisions of any applicable statute of limitation or repose.

13.08 *Intentionally omitted.*

13.09 *Owner May Correct Defective Work*

A. If Contractor fails within a reasonable time after written notice from Owner to correct defective Work, or to remove and replace rejected Work as required by Owner in accordance with Paragraph 13.06.A, or if Contractor fails to perform the Work in accordance with the Contract Documents, or if Contractor fails to comply with any other provision of the Contract Documents, Owner may, after seven days written notice to Contractor, correct, or remedy any such deficiency.

B. In exercising the rights and remedies under this Paragraph 13.09, Owner shall proceed expeditiously. In connection with such corrective or remedial action, Owner may exclude Contractor from all or part of the Site, take possession of all or part of the Work and suspend Contractor's services related thereto, take possession of Contractor's tools, appliances, construction equipment and machinery at the Site, and incorporate in the Work all materials and equipment stored at the Site or for which Owner has paid Contractor but which are stored elsewhere. Contractor shall allow Owner, Owner's representatives, agents and employees, Owner's other contractors, and Engineer and Engineer's consultants access to the Site to enable Owner to exercise the rights and remedies under this Paragraph.

C. All claims, costs, losses, and damages (including but not limited to all fees and charges of engineers, architects, attorneys, and other professionals and all court or arbitration or other dispute resolution costs) incurred or sustained by Owner in exercising the rights and remedies under this Paragraph 13.09 will be charged against Contractor, and a Change Order will be

issued incorporating the necessary revisions in the Contract Documents with respect to the Work; and Owner shall be entitled to an appropriate decrease in the Contract Price. If the parties are unable to agree as to the amount of the adjustment, Owner may make a Claim therefor as provided in Paragraph 10.05. Such claims, costs, losses and damages will include but not be limited to all costs of repair, or replacement of work of others destroyed or damaged by correction, removal, or replacement of Contractor's defective Work.

D. Contractor shall not be allowed an extension of the Contract Times because of any delay in the performance of the Work attributable to the exercise by Owner of Owner's rights and remedies under this Paragraph 13.09.

ARTICLE 14 – PAYMENTS TO CONTRACTOR AND COMPLETION

14.01 *Schedule of Values*

A. The Schedule of Values with those Milestones established as provided in Paragraph 2.07.A, if any and if requested by Contractor in its Bid, will serve as the basis for progress payments and will be incorporated into a form of Application for Payment acceptable to Owner. Progress payments on account of Unit Price Work will be based on the number of units completed.

14.02 *Progress Payments*

A. *Applications for Payments:*

1. No sooner than the later to occur of any date established in the Agreement for each progress payment based on completion of a Milestone or the actual completion of Work on that Milestone (but not more often than once a month), Contractor shall submit to Engineer for review an Application for Payment filled out and signed by Contractor covering the Work completed as of the date of the Application and accompanied by such supporting documentation as is required by the Contract Documents. If payment includes materials and/or equipment, then the Application for Payment shall also be accompanied by a bill of sale, invoice, or other documentation warranting that Owner has received the materials and equipment free and clear of all Liens and evidence that the materials and equipment are covered by appropriate property insurance or other arrangements to protect Owner's interest therein, all of which must be satisfactory to Owner. Owner shall have 45 days from receipt of any valid Application for Payment based on completion of a Milestone to either: (i) determine that the Milestone has been met to the Owner's sole satisfaction and to pay the same (however making payment does not waive any claims Owner may have again Contractor if the Work is later found to be defective, incomplete, or otherwise not in strict conformance with the Contract Documents or Agreement); or (ii) to notify the Contractor that the Work on the Milestone is unsatisfactory and payment is therefore denied. Owner shall not be deemed to have received the Contractor's valid Application for Payment until the Owner has received said Application for Payment and also has received Engineer's recommendation that the Application for Payment be paid as set forth in 14.02(B) below.

2. Beginning with the second Application for Payment, each Application shall include an affidavit of Contractor stating that all previous progress payments received on account of the Work have been applied on account to discharge Contractor's legitimate obligations associated with prior Applications for Payment.

3. The amount of retainage with respect to progress payments for Milestones will be as stipulated in the Agreement.

B. *Review of Applications:*

1. Engineer will, within 10 days after receipt of each Application for Payment, either indicate in writing a recommendation of payment and present the Application to Owner or return the Application to Contractor indicating in writing Engineer's reasons for refusing to recommend payment. In the latter case, Contractor may make the necessary corrections and resubmit the Application.

2. Engineer's recommendation of any payment requested in an Application for Payment will constitute a representation by Engineer to Owner, based on Engineer's observations of the executed Work as an experienced and qualified design professional, and on Engineer's review of the Application for Payment and the accompanying data and schedules, that to the best of Engineer's knowledge, information and belief:

   a. the Work has progressed to the point indicated;

   b. the quality of the Work is generally in accordance with the Contract Documents (subject to an evaluation of the Work as a functioning whole prior to or upon Substantial Completion, the results of any subsequent tests called for in the Contract Documents, a final determination of quantities and classifications for Unit Price Work under Paragraph 9.07, and any other qualifications stated in the recommendation); and

   c. the conditions precedent to Contractor's being entitled to such payment appear to have been fulfilled in so far as it is Engineer's responsibility to observe the Work.

3. By recommending any such payment Engineer will not thereby be deemed to have represented that:

   a. inspections made to check the quality or the quantity of the Work as it has been performed have been exhaustive, extended to every aspect of the Work in progress, or involved detailed inspections of the Work beyond the responsibilities specifically assigned to Engineer in the Contract Documents; or

   b. there may not be other matters or issues between the parties that might entitle Contractor to be paid additionally by Owner or entitle Owner to withhold payment to Contractor.

4. Neither Engineer's review of Contractor's Work for the purposes of recommending payments nor Engineer's recommendation of any payment, including final payment, will impose responsibility on Engineer:

   a. to supervise, direct, or control the Work, or

   b. for the means, methods, techniques, sequences, or procedures of construction, or the safety precautions and programs incident thereto, or

c. for Contractor's failure to comply with Laws and Regulations applicable to Contractor's performance of the Work, or

d. to make any examination to ascertain how or for what purposes Contractor has used the moneys paid on account of the Contract Price, or

e. to determine that title to any of the Work, materials, or equipment has passed to Owner free and clear of any Liens.

5. Engineer may refuse to recommend the whole or any part of any payment if, in Engineer's opinion, it would be incorrect to make the representations to Owner stated in Paragraph 14.02.B.2. Engineer may also refuse to recommend any such payment or, because of subsequently discovered evidence or the results of subsequent inspections or tests, revise or revoke any such payment recommendation previously made, to such extent as may be necessary in Engineer's opinion to protect Owner from loss because:

a. the Work is defective, or completed Work has been damaged, requiring correction or replacement;

b. the Contract Price has been reduced by Change Orders;

c. Owner has been required to correct defective Work or complete Work in accordance with Paragraph 13.09; or

d. Engineer has actual knowledge of the occurrence of any of the events enumerated in Paragraph 15.02.A.

C. *Payment Becomes Due:*

1. Owner shall have 45 days from receipt of any valid Application for Payment based on completion of a Milestone to either: (i) determine that the Milestone has been met to the Owner's sole satisfaction and to pay the same (however making payment does not waive any claims Owner may have again Contractor if the Work is later found to be defective, incomplete, or otherwise not in strict conformance with the Contract Documents or Agreement); or (ii) to notify the Contractor that the Work on the Milestone is unsatisfactory and payment is therefore denied. Owner shall not be deemed to have received the Contractor's valid Application for Payment until the Owner has received said Application for Payment and also has received Engineer's recommendation that the Application for Payment be paid as set forth in 14.02(B) below.

D. *Reduction in Payment:*

1. Owner may refuse to make payment of the full amount recommended by Engineer because:

a. claims have been made against Owner on account of Contractor's performance or furnishing of the Work;

b. Liens have been filed in connection with the Work, except where Contractor has delivered a specific bond satisfactory to Owner to secure the satisfaction and discharge of such Liens;

c. there are other items entitling Owner to a set-off against the amount recommended;

d. Owner has actual knowledge of the occurrence of any of the events enumerated in Paragraphs 14.02.B.5.a through 14.02.B.5.c or Paragraph 15.02.A or

e. Owner notifies the Contractor that the Work on the Milestone is unsatisfactory or the Work is not in strict conformance with the Contract Documents and payment is therefore denied in whole or part.

2. If Owner refuses to make payment of the full amount recommended by Engineer, Owner will give Contractor immediate written notice (with a copy to Engineer) stating the reasons for such action and promptly pay Contractor any amount remaining after deduction of the amount so withheld. Owner shall promptly pay Contractor the amount so withheld, or any adjustment thereto agreed to by Owner and Contractor, when Contractor remedies the reasons for such action.

3. Upon a subsequent determination that Owner's refusal of payment was not justified, the amount wrongfully withheld shall be treated as an amount due as determined by Paragraph 14.02.C.1 and subject to interest as provided in the Agreement.

14.03 *Contractor's Warranty of Title*

A. Contractor warrants and guarantees that title to all Work, materials, and equipment covered by any Application for Payment, whether incorporated in the Project or not, will pass to Owner no later than the time of payment free and clear of all Liens.

14.04 *Substantial Completion*

A. When Contractor considers the entire Work ready for its intended use Contractor shall notify Owner and Engineer in writing that the entire Work is substantially complete (except for only nominal insubstantial items specifically listed by Contractor as incomplete) and request that Engineer issue a certificate of Substantial Completion.

B. Promptly after Contractor's notification, Owner, Contractor, and Engineer shall make an inspection of the Work to determine the status of completion. If Engineer does not consider the Work substantially complete, Engineer will notify Owner in writing giving the reasons therefor. If Owner does not consider the Work substantially complete, Owner will notify Contractor in writing giving the reasons therefor.

C. If Owner considers the Work substantially complete, Engineer will deliver to Owner a tentative certificate of Substantial Completion which shall fix the date of Substantial Completion. There shall be attached to the certificate a tentative list of items to be completed or corrected before final payment. Owner will review the draft certificate of Substantial Completion (with a tentative list of items to be completed or corrected) prepared by Engineer. Owner may revise and shall finalize the certificate of Substantial Completion with a final list of items to be completed or corrected.

D. At the time of delivery of the tentative certificate of Substantial Completion, Engineer will deliver to Owner a written recommendation as to division of responsibilities pending final payment between Owner and Contractor with respect to security, operation, safety, and

protection of the Work, maintenance, heat, utilities, insurance, and warranties and guarantees. Owner will review the recommendation and revise the same as Owner deems appropriate. When the recommendation of the division of responsibilities pending final payment is acceptable to the Owner in its sole discretion, the Owner will deliver it to the Contractor and Engineer.

E. Owner shall have the right to exclude Contractor from the Site after the date of Substantial Completion subject to allowing Contractor reasonable access to remove its property and complete or correct items on the tentative list.

14.05 *Partial Utilization*

A. Prior to Substantial Completion of all the Work, Owner may use or occupy any substantially completed part of the Work which has specifically been identified in the Contract Documents, or which Owner and Contractor agree constitutes a separately functioning and usable part of the Work that can be used by Owner for its intended purpose without significant interference with Contractor's performance of the remainder of the Work, subject to the following conditions:

1. Owner at any time may request Contractor in writing to permit Owner to use or occupy any such part of the Work which Owner believes to be ready for its intended use and substantially complete, and such permission shall not be unreasonably withheld or delayed. If and when Contractor agrees that such part of the Work is substantially complete, Contractor, Owner, and Owner will follow the procedures of Paragraph 14.04.A through D for that part of the Work.

2. Contractor at any time may notify Owner and Engineer in writing that Contractor considers any such part of the Work ready for its intended use and substantially complete and request Engineer to issue a certificate of Substantial Completion for that part of the Work.

3. Within a reasonable time after either such request, Owner, Contractor, and Engineer shall make an inspection of that part of the Work to determine its status of completion. If Engineer does not consider that part of the Work to be substantially complete, Engineer will notify Owner and Contractor in writing giving the reasons therefor.

4. No use or occupancy or separate operation of part of the Work may occur prior to compliance with the requirements of Paragraph 5.10 regarding property insurance.

5. Liquidated Damages, as provided for in the Agreement, will not be reduced or delayed due to partial utilization.

14.06 *Final Inspection*

A. Upon written notice from Contractor that the entire Work or an agreed portion thereof is complete, Engineer will promptly make a final inspection with Owner and Contractor and then the Owner will notify Contractor in writing of all particulars in which this inspection reveals that the Work is incomplete or defective. Contractor shall immediately take such measures as are necessary to complete such Work or remedy such deficiencies.

14.07 *Final Payment*

A. *Application for Payment:*

1. After Contractor has, in the opinion of Owner, satisfactorily completed all corrections identified during the final inspection and has delivered, in accordance with the Contract Documents, all maintenance and operating instructions, warranty documentation, schedules, guarantees, bonds, certificates or other evidence of insurance, certificates of inspection, marked-up record documents (as provided in Paragraph 6.12), and other documents, Contractor may make application for final payment following the procedure for progress payments.

2. The final Application for Payment shall be accompanied (except as previously delivered) by:

   a. all documentation called for in the Contract Documents, including but not limited to the evidence of insurance required by Paragraph 5.04.B.6;

   b. consent of the surety, if any, to final payment;

   c. a list of all Claims against Owner that Contractor believes are unsettled; and

   d. complete and legally effective releases or waivers (satisfactory to Owner) of all Lien rights arising out of or Liens filed in connection with the Work. Such releases or waivers shall be provided in addition to affidavits required by Paragraph 14.02.A.2.

3. In lieu of the releases or waivers of Liens specified in Paragraph 14.07.A.2 and as approved by Owner in the Owner's sole discretion, Contractor may furnish receipts or releases in full and an affidavit of Contractor that: (i) the releases and receipts include all labor, services, material, and equipment for which a Lien could be filed; and (ii) all payrolls, material and equipment bills, and other indebtedness connected with the Work for which Owner might in any way be responsible, or which might in any way result in liens or other burdens on Owner's property, have been paid or otherwise satisfied. If any Subcontractor or Supplier fails to furnish such a release or receipt in full, Contractor may furnish a bond or other collateral satisfactory to Owner to indemnify Owner against any Lien.

B. *Owner and Engineer's Review of Application and Acceptance:*

1. If, on the basis of Engineer's observation of the Work during construction and final inspection, and Owner's and Engineer's review of the final Application for Payment and accompanying documentation as required by the Contract Documents, Owner and Engineer are satisfied that the Work has been completed and Contractor's other obligations under the Contract Documents have been fulfilled, Engineer will, within ten days after receipt of the final Application for Payment, indicate in writing Engineer's recommendation of payment and present the Application for Payment to Owner for payment. At the same time Engineer will also give written notice to Owner that the Work is acceptable to Engineer subject to the provisions of Paragraph 14.09. Otherwise, Engineer will return the Application for Payment to Contractor, indicating in writing the

reasons for refusing to recommend final payment, in which case Contractor shall make the necessary corrections and resubmit the Application for Payment.

C. *Payment Becomes Due:*

1. Owner shall have 45 days from receipt of any valid Application for Payment based on final completion to either: (i) determine that the Work is complete, the Work is in strict conformance to the Contract Documents and Agreement and that no Claims are outstanding to the Owner's sole satisfaction and to pay the same (however making payment does not waive any claims Owner may have again Contractor if the Work is later found to be defective, incomplete, or otherwise not in strict conformance with the Contract Documents or Agreement); or (ii) to notify the Contractor that the Work incomplete or unsatisfactory not in strict conformance to the Contract Documents or Agreement or that a Claim is unresolved and payment is therefore denied. Owner shall not be deemed to have received the Contractor's valid Application for Payment until the Owner has received said Application for Payment and also has received Engineer's recommendation that the Application for Payment be paid as set forth in 14.07(B) above. Notwithstanding any provision of these General Requirements, while any Claim is outstanding, any Work is incomplete or defective, or any Work is not in strict conformance with the Contract Documents, Final Payment shall not be due or owing.

2. A valid Application for Payment and accompanying documentation must not request a payment that exceeds the final amount owed less any sum Owner is entitled to set off against Engineer's recommendation, including but not limited to liquidated damages.

14.08 *Final Completion Delayed*

A. Even if, through no fault of Contractor, final completion of the Work is significantly delayed, the final Application for Payment will be delayed until the Work is complete and payment will be due as described under 14.07(C) above.

14.09 *Waiver of Claims*

A. The making and acceptance of final payment will not constitute a waiver of any Claims by Owner against Contractor, including without limitation, Claims arising from unsettled Liens, from defective Work appearing after final inspection pursuant to Paragraph 14.06, from failure to comply with the Contract Documents or the terms of any special guarantees specified therein, or from Contractor's continuing obligations under the Contract Documents.

B. The making of final payment will not constitute a waiver of any Claims by Owner against Contractor, including without limitation, Claims arising from unsettled Liens, from defective Work appearing after final inspection pursuant to Paragraph 14.06, from failure to comply with the Contract Documents or the terms of any special guarantees specified therein, or from Contractor's continuing obligations under the Contract Documents.

C. The acceptance by Contractor of final payment will constitute a waiver of all Claims by Contractor against Owner other than those previously made in accordance with the requirements herein and expressly acknowledged by Owner in writing as still unsettled.

ARTICLE 15 – SUSPENSION OF WORK AND TERMINATION

15.01 *Owner May Suspend Work*

A. At any time and without cause, Owner may suspend the Work or any portion thereof for a period of not more than 90 consecutive days by notice in writing to Contractor and Engineer which will fix the date on which Work will be resumed. Contractor shall resume the Work on the date so fixed. If the suspension is due to no fault of Contractor, Contractor may be granted an adjustment in the Contract Price or an extension of the Contract Times, or both, directly attributable to any such suspension if Contractor makes a Claim therefor as provided in Paragraph 10.05 and upon approval of such adjustment by the Owner in the Owner's sole discretion.

15.02 *Owner May Terminate for Cause*

A. The occurrence of any one or more of the following events will justify termination for cause:

1. Contractor's persistent failure to perform the Work in accordance with the Contract Documents (including, but not limited to, failure to supply sufficient skilled workers or suitable materials or equipment or failure to adhere to the Progress Schedule established under Paragraph 2.07 as adjusted from time to time pursuant to Paragraph 6.04);

2. Contractor's disregard of Laws or Regulations of any public body having jurisdiction;

3. Contractor's repeated disregard of the authority of Engineer; or

4. Contractor's violation in any substantial way of any provisions of the Contract Documents.

B. If one or more of the events identified in Paragraph 15.02.A occur, Owner may, after giving Contractor (and surety) seven days written notice of its intent to terminate the services of Contractor:

1. exclude Contractor from the Site, and take possession of the Work and of all Contractor's tools, appliances, construction equipment, and machinery at the Site, and use the same to the full extent they could be used by Contractor (without liability to Contractor for trespass or conversion);

2. incorporate in the Work all materials and equipment stored at the Site or for which Owner has paid Contractor but which are stored elsewhere; and

3. complete the Work as Owner may deem expedient.

C. If Owner proceeds as provided in Paragraph 15.02.B, Contractor shall not be entitled to receive any further payment until the Work is completed. If the unpaid balance of the Contract Price exceeds all claims, costs, losses, and damages (including but not limited to all fees and charges of engineers, architects, attorneys, and other professionals and all court or arbitration or other dispute resolution costs) sustained by Owner arising out of or relating to completing the Work, such excess will be retained by the Owner. If such claims, costs, losses, and damages exceed such unpaid balance, Contractor shall pay the difference to Owner. When

exercising any rights or remedies under this Paragraph, Owner shall not be required to obtain the lowest price for the Work performed. Nothing herein shall limit any claims or actions Owner may have against Contractor.

D. Notwithstanding Paragraphs 15.02.B and 15.02.C, Contractor's services will not be terminated if Contractor begins within seven days of receipt of notice of intent to terminate to correct its failure to perform and proceeds diligently to cure such failure within no more than 10 days of receipt of said notice and provides written notice of its plan of correction to Owner and Owner accepts Contractor's plan in its sole discretion. Should Contractor thereafter fail to act to diligently cure its failure in strict conformance with the plan submitted to the Owner, then the Owner shall notify the Contractor of such failure and may immediately terminate for cause.

E. Where Contractor's services have been so terminated by Owner, the termination will not affect any rights or remedies of Owner against Contractor then existing or which may thereafter accrue. Any retention or payment of moneys due Contractor by Owner will not release Contractor from liability.

F. If and to the extent that Contractor has provided a performance bond under the provisions of Paragraph 5.01.A, the termination procedures of that bond shall supersede the provisions of Paragraphs 15.02.B and 15.02.C.

G. These rights of termination shall be in addition to any rights of termination the Owner may have under the County's General Terms and nothing herein is intended to limit such rights and shall not be construed as a limit on such rights.

15.03 *Owner May Terminate for Convenience*

A. Upon seven days written notice to Contractor and Engineer, Owner may, without cause and without prejudice to any other right or remedy of Owner, terminate the Contract. In such case, Contractor shall be paid for (without duplication of any items):

1. completed and acceptable Work executed in accordance with the Contract Documents prior to the effective date of termination; and

2. expenses sustained prior to the effective date of termination in performing services and furnishing labor, materials, or equipment as required by the Contract Documents in connection with uncompleted Work.

B. Contractor shall not be paid on account of loss of anticipated profits or revenue or other economic loss arising out of or resulting from such termination.

15.04 *Contractor May Stop Work or Terminate*

A. If Contractor has pursued all Work diligently and in strict conformance with the Agreement and Contract Documents, and through no act or fault of Contractor, (i) the Work is suspended for more than 90 consecutive days by Owner or under an order of court or other public authority, or (ii) Owner fails to act on any valid and undisputed Application for Payment within 45 days after it is submitted, or (iii) Owner fails for 90 days to pay Contractor any sum finally determined to be due, then Contractor may, upon 30 days written notice to Owner and

Engineer, and provided Owner or Engineer do not remedy such suspension or failure within that time, terminate the Contract and recover from Owner payment on the same terms as provided in Paragraph 15.03.

B. In lieu of terminating the Contract and without prejudice to any other right or remedy, if Engineer has failed to act on a valid and undisputed Application for Payment within 90 days after it is submitted, or Owner has failed for 90 days to pay Contractor any sum finally determined to be due, Contractor may, seven days after written notice to Owner and Engineer, stop the Work until payment is made of all such amounts due Contractor. The provisions of this Paragraph 15.04 are not intended to preclude Contractor from making a Claim under Paragraph 10.05 for an adjustment in Contract Price or Contract Times or otherwise for expenses or damage directly attributable to Contractor's stopping the Work as permitted by this Paragraph.

ARTICLE 16 – INTENTIONALLY OMITTED.

ARTICLE 17 – MISCELLANEOUS

17.01 *Giving Notice*

A. Whenever any provision of the Contract Documents requires the giving of written notice, it will be deemed to have been validly given if:

1. delivered in person or mailed registered or certified (postage prepaid) to the head administrator of the organization or of the department responsible for matters related to the Project.

17.02 *Computation of Times*

A. When any period of time is referred to in the Contract Documents by days, it will be computed to exclude the first and include the last day of such period.

17.03 *Cumulative Remedies*

A. The duties and obligations imposed by these General Conditions and the rights and remedies available hereunder to the parties hereto are in addition to, and are not to be construed in any way as a limitation of, any rights and remedies available to any or all of them which are otherwise imposed or available by Laws or Regulations, by special warranty or guarantee, or by other provisions of the Contract Documents. The provisions of this Paragraph will be as effective as if repeated specifically in the Contract Documents in connection with each particular duty, obligation, right, and remedy to which they apply.

17.04 *Survival of Obligations*

A. All representations, indemnifications, warranties, and guarantees made in, required by, or given in accordance with the Contract Documents, as well as all continuing obligations indicated in the Contract Documents, will survive final payment, completion, and acceptance of the Work or termination or completion of the Contract or termination of the services of Contractor.

17.05 *Controlling Law*

A. This Contract is to be governed by the law of the state in which the Project is located.

17.06 *Headings*

A. Article and paragraph headings are inserted for convenience only and do not constitute parts of these General Conditions.

END OF SECTION

Exhibit G

Exhibit G1

Contractor's Application for Payment No. _____

	Application Period:	Application Date:
To (Owner): Fluvanna County	From (Contractor):	Via (Engineer):
Project: Zion Crossroads Water Booster Station and Wastewater Pump Station	Contract:	
Owner's Contract No.:	Contractor's Project No.:	Engineer's Project No.: 50078863 & 50078864

Application For Payment

Change Order Summary

Approved Change Orders		
Number	Additions	Deductions
TOTALS		
NET CHANGE BY CHANGE ORDERS		

1. ORIGINAL CONTRACT PRICE..... $ _____

2. Net change by Change Orders..... $ _____

3. Current Contract Price (Line 1 ± 2)..... $ _____

4. TOTAL COMPLETED AND STORED TO DATE

(Column F on Progress Estimate)..... $ _____

5. RETAINAGE:

a. X _____ **Work Completed**..... $ _____

b. X _____ **Stored Material**..... $ _____

c. Total Retainage (Line 5a + Line 5b)..... $ _____

6. AMOUNT ELIGIBLE TO DATE (Line 4 - Line 5c)..... $ _____

7. LESS PREVIOUS PAYMENTS (Line 6 from prior Application)..... $ _____

8. AMOUNT DUE THIS APPLICATION..... $ _____

9. BALANCE TO FINISH, PLUS RETAINAGE

(Column G on Progress Estimate + Line 5 above)..... $ _____

Contractor's Certification

The undersigned Contractor certifies that to the best of its knowledge: (1) all previous progress payments received from Owner on account of Work done under the Contract have been applied on account to discharge Contractor's legitimate obligations incurred in connection with Work covered by prior Applications for Payment; (2) title of all Work, materials and equipment incorporated in said Work or otherwise listed in or covered by this Application for Payment will pass to Owner at time of payment free and clear of all Liens, security interests and encumbrances (except such as are covered by a Bond acceptable to Owner indemnifying Owner against any such Liens, security interest or encumbrances); and (3) all Work covered by this Application for Payment is in accordance with the Contract Documents and is not defective.

By:	Date:

Payment of: $ _____

(Line 8 or other - attach explanation of the other amount)

is recommended by: _____ _____

(Engineer) (Date)

Payment of: $ _____

(Line 8 or other - attach explanation of the other amount)

is approved by: _____ _____

(Owner) (Date)

Approved by: _____ _____

Funding Agency (if applicable) (Date)

Endorsed by the Construction Specifications Institute.

© 2007 National Society of Professional Engineers for EJCDC. All rights reserved.

BOS 2019-01-09 p.865/1491

Progress Estimate

Contractor's Application

For (contract):	Application Number:
Application Period:	Application Date:

A		B	Work Completed		E	F		G
Item		Scheduled Value	C	D	Materials Presently Stored (not in C or D)	Total Completed and Stored to Date (C + D + E)	% (F) B	Balance to Finish (B - F)
Specification Section No.	Description		From Previous Application (C+D)	This Period				
	Totals							

© 2007 National Society of Professional Engineers for EJCDC. All rights reserved.

BOS 2019-01-09 p.866/1491

Progress Estimate

Contractor's Application

For (contract):							Application Number:			
Application Period:							Application Date:			
A				B	C	D	E	F		
Item		Bid Quantity	Unit Price	Bid Value	Estimated Quantity Installed	Value	Materials Presently Stored (not in C)	Total Completed and Stored to Date (D + E)	% (F) B	Balance to Finish (B - F)
Bid Item No.	Description									
	Totals									

© 2007 National Society of Professional Engineers for EJCDC. All rights reserved.

BOS 2019-01-09 p.867/1491

Stored Material Summary

Contractor's Application

For (contract):	Application Number:
Application Period:	Application Date:

A	B	C	D		E		F		G
			Stored Previously		Stored this Month		Incorporated in Work		
Invoice No.	Shop Drawing Transmittal No.	Materials Description	Date (Month/Year)	Amount ($)	Amount ($)	Subtotal	Date (Month/Year)	Amount ($)	Materials Remaining in Storage ($) (D + E - F)
		Totals							

© 2007 National Society of Professional Engineers for EJCDC. All rights reserved.

BOS 2019-01-09 p.868/1491

Exhibit G2

Certificate of Substantial Completion

Project: Zion Crossroads Water Booster Station and Wastewater Pump Station	
Owner: Fluvanna County	Owner's Contract No.:
Contract:	Engineer's Project No.: 50078863 & 50078864

This [tentative] [definitive] Certificate of Substantial Completion applies to:

☐ All Work under the Contract Documents: ☐ The following specified portions of the Work:

_____

_____

_____

_____

_____
Date of Substantial Completion

The Work to which this Certificate applies has been inspected by authorized representatives of Owner, Contractor, and Engineer, and found to be substantially complete. The Date of Substantial Completion of the Project or portion thereof designated above is hereby declared and is also the date of commencement of applicable warranties required by the Contract Documents, except as stated below.

A [tentative] [definitive] list of items to be completed or corrected is attached hereto. This list may not be all-inclusive, and the failure to include any items on such list does not alter the responsibility of the Contractor to complete all Work in accordance with the Contract Documents.

The responsibilities between Owner and Contractor for security, operation, safety, maintenance, heat, utilities, insurance and warranties shall be as provided in the Contract Documents except as amended as follows:

☐ Amended Responsibilities ☐ Not Amended

Owner's Amended Responsibilities:

_____

_____

_____

Contractor's Amended Responsibilities:

_____

_____

_____

_____

The following documents are attached to and made part of this Certificate:

_____

_____

_____

This Certificate does not constitute an acceptance of Work not in accordance with the Contract Documents nor is it a release of Contractor's obligation to complete the Work in accordance with the Contract Documents.

Executed by Engineer	Date
Accepted by Contractor	Date
Accepted by Owner	Date

Exhibit G3

Work Change Directive

No. _____

Date of Issuance: _____ Effective Date: _____

Project: Zion Crossroads Water Booster Station and Wastewater Pump Station	Owner: Fluvanna County	Owner's Contract No.:
Contract:		Date of Contract:
Contractor:		Engineer's Project No.: 50078863 & 50078864

Contractor is directed to proceed promptly with the following change(s):

Item No.	Description

Attachments (list documents supporting change):

_____

_____

Purpose for Work Change Directive:

Authorization for Work described herein to proceed on the basis of Cost of the Work due to:

- ☐ Nonagreement on pricing of proposed change.
- ☐ Necessity to expedite Work described herein prior to agreeing to changes on Contract Price and Contract Time.

Estimated change in Contract Price and Contract Times:

Contract Price $ _____ (increase/decrease) Contract Time _____ (increase/decrease) days

Recommended for Approval by Engineer:	Date
Authorized for Owner by:	Date
Received for Contractor by:	Date
Received by Funding Agency (if applicable):	Date:

Exhibit G4

Change Order

No. _____

Date of Issuance: _____ Effective Date: _____

Project: Zion Crossroads Water Booster Station and Wastewater Pump Station	Owner: Fluvanna County	Owner's Contract No.:
Contract:		Date of Contract:
Contractor:		Engineer's Project No.: 50078863 & 50078864

The Contract Documents are modified as follows upon execution of this Change Order:

Description:

Attachments (list documents supporting change):

CHANGE IN CONTRACT PRICE:	CHANGE IN CONTRACT TIMES:
Original Contract Price: $_____	Original Contract Times: ☐ Working days ☐ Calendar days Substantial completion (days or date): _____ Ready for final payment (days or date): _____
[Increase] [Decrease] from previously approved Change Orders No. _____ to No. $_____	[Increase] [Decrease] from previously approved Change Orders Substantial completion (days): _____ Ready for final payment (days): _____
Contract Price prior to this Change Order: $_____	Contract Times prior to this Change Order: Substantial completion (days or date): _____ Ready for final payment (days or date): _____
[Increase] [Decrease] of this Change Order: $_____	[Increase] [Decrease] of this Change Order: Substantial completion (days or date): _____ Ready for final payment (days or date): _____
Contract Price incorporating this Change Order: $_____	Contract Times with all approved Change Orders: Substantial completion (days or date): _____ Ready for final payment (days or date): _____

RECOMMENDED:	ACCEPTED:	ACCEPTED:
By: _____	By: _____	By: _____
Engineer (Authorized Signature)	Owner (Authorized Signature)	Contractor (Authorized
Date: _____	Date: _____	Date: _____

Approved by Funding Agency (if applicable):

_____ Date: _____

Change Order

Instructions

A. GENERAL INFORMATION

This document was developed to provide a uniform format for handling contract changes that affect the Agreement, Contract Price or Contract Times. To be binding on Owner, any changes to the Agreement of any kind, whether that have been initiated by a Work Change Directive, Field Order or otherwise, must be incorporated into a written Change Order signed by the Owner.

Changes, including without limitation those that affect Contract Price or Contract Times, should be promptly covered by a Change Order. The practice of accumulating Change Orders to reduce the administrative burden may lead to unnecessary disputes.

If Milestones have been listed in the Agreement, any effect of a Change Order thereon should be addressed.

For supplemental instructions and minor changes not involving a change in the Contract Price or Contract Times, a Field Order should be used.

B. COMPLETING THE CHANGE ORDER FORM

Engineer normally initiates the form, including a description of the changes involved and attachments based upon documents and proposals submitted by Contractor, or requests from Owner, or both.

Once Engineer has completed and signed the form, all copies should be sent to Contractor for approval. After approval by Contractor, the Change Order shall be sent to the Owner for approval in its sole discretion. Engineer should make distribution of executed copies after approval by both parties.

If a change only applies to price or to times, cross out the part of the tabulation that does not apply.

Exhibit G5

Field Order

No. _____

Date of Issuance: _____ Effective Date: _____

Project: Zion Crossroads Water Booster Station and Wastewater Pump Station	Owner: Fluvanna County	Owner's Contract No.:
Contract:		Date of Contract:
Contractor:		Engineer's Project No.: 50078863 & 50078864

Attention:
You are hereby directed to promptly execute this Field Order issued in accordance with General Conditions Paragraph 9.04.A, for minor changes in the Work without changes in Contract Price or Contract Times once approved by the Owner. If you consider that a change in Contract Price or Contract Times is required, please notify the Engineer immediately and before proceeding with this Work.

Reference: _____ _____
(Specification Section(s)) (Drawing(s) / Detail(s))

Description: _____

Attachments: _____

	Engineer:
Receipt Acknowledged by Contractor:	Date:

Owner Approval: _____
Date: _____

Exhibit G6

(Contractor Name)

(Contractor Address)
(Contractor Telephone)
FAX **(Contractor Fax)**

REQUEST FOR INFORMATION

Project No. _____

RFI No. _____
Date: _____

To:_____
From:_____
Project Name: _____
Contract No.:_____
Owner: _____
Subject: _____
Contract Drawing(s):_____
Specification Section: _____

Question:

_____
_____
_____
_____
_____
_____
_____

Contractor:
Signature _____ *Date*

Reply:

_____
_____
_____
_____
_____
_____
_____

Engineer/Architect:
Signature _____ *Date*
Cc: File

Exhibit H

TABLE OF CONTENTS
PROJECT MANUAL

ZION CROSSROADS
WATER BOOSTER PUMP STATION AND WASTEWATER PUMP STATION

DIVISION 00 - BIDDING AND CONTRACT DOCUMENTS

Advertisement for Bids
Instruction to Bidders
Contractor's Qualification Statement
Bid Form
Bid Bond
Notice of Award
Agreement
Notice to Proceed
Performance Bond
Payment Bond
Contractor's Application for Payment
Certificate of Substantial Completion
General Conditions
Work Change Directive
Change Order
Field Order
Request For Information Form
Pre-Bid Question Form

TECHNICAL SPECIFICATIONS

Division 01 - General Requirements

Section 01010 – Summary of Work
Section 01013 – Mobilization
Section 01200 – Price and Payment Procedure
Section 01310 – Project Meetings
Section 01320 – Scheduling of Construction
Section 01330 – Submittal Procedures
Section 01400 – Testing and Special Inspections
Section 01500 – Temporary Facilities and Controls
Section 01730 – Operating and Maintenance Data
Section 01770 – Closeout Procedures

Division 02 – Site Work

Section 02100 – Site Preparation
Section 02110 – Clearing and Grubbing
Section 02120 – Erosion and Sediment Control
Section 02220 – Demolition
Section 02230 – Dewatering
Section 02300 – Earthwork
Section 02325 – Trenching and Backfilling
Section 02600 – Piping System Testing
Section 02710 – Asphalt Paving

Section 02798 – Utility Location and Identification
Section 02821 – Chain Link Fence and Gates
Section 02920 – Turf and Grasses

Division 03 – Concrete
Section 03240 – Adhesive Anchors
Section 03300 - Cast-In-Place Concrete
Section 03400 – Precast Concrete Structures
Section 03600 – Grout

Division 04 – Unit Masonry Assemblies
Section 04220 – Concrete Unit Masonry

Division 05 – Metals
Section 05120 – Structural Steel
Section 05520 - Aluminum Access Hatches
Section 05530 - Pipe Supports and Stands

Division 06 – Wood and Plastics
Section 06100 – Rough Carpentry
Section 06160 – Sheathing
Section 06170 – Shop-Fabricated Wood Trusses

Division 07 – Thermal and Moisture Protection
Section 07212 – Board and Batt Insulation
Section 07220 – EIFS Exterior Wall System
Section 07411 – Preformed Metal Roof Panels
Section 07620 – Sheet Metal Flashing and Trim
Section 07631 – Gutters and Downspouts
Section 07720 – Roof Accessories
Section 07920 – Joint Sealants

Division 08 – Openings
Section 08111 – Hollow Metal Doors and Frames
Section 08200 – Sliding Window
Section 08332 – Overhead Coiling Door
Section 08710 – Door Hardware

Division 09 – Finishes
Section 09900 – Coatings and Paintings
Section 09910 – Concrete Epoxy Coatings

Division 11 – Equipment
Section 11100 – Process Piping
Section 11110 – Flow Measurement
Section 11150 – Valves, Hydrants, and Appurtenances
Section 11300 – Sewage Pumps
Section 11500 – Horizontal Split Case Pumps
Section 11810 – Pipe Identification Markers
Section 11820 – Disinfection and Flushing of Water Tanks and Piping Systems

Division 13 – Special Construction
Section 13005 – Signage
Section 13120 – Precast Concrete Building

Division 15 – Mechanical
Section 15010 – Basic Mechanical Requirements
Section 15738 – Split System Air-Conditioning Units
Section 15767 – Propeller Unit Heaters
Section 15838 – Exhaust Fan
Section 15856 – Combination Louver/Damper
Section 15010P – Basic Plumbing Requirements
Section 15083P – Plumbing Insulation
Section 15100P – Plumbing Valves

Division 16 – Electrical
Section 16010 – General Electrical Provisions
Section 16110 – Raceways
Section 16120 – Wiring
Section 16131 – Pull and Junction Boxes
Section 16132 – Pilot Devices
Section 16133 – Position Switches
Section 16134 – Switch and Outlet Boxes
Section 16170 – Variable Frequency Drive
Section 16470 – General Lighting and Distribution Panelboards
Section 16620 – Emergency Standby Power System

Appendix A – VUSBC Statement of Special Inspections
Appendix B – Geotechnical Engineering Reports
1. Zion Crossroads Water and Sewer System, Wastewater Pump Station, March 2017
2. Zion Crossroads Water and Sewer System, Water Booster Station, March 2017

The "Zion Crossroads Water Booster Pump Station and Wastewater Pump Station" drawings are incorporated into this Project Manual by reference as material provisions hereof.

END OF SECTION TOC

SECTION 01010
SUMMARY OF WORK

PART 1- GENERAL

1.1 WORK COVERED BY CONTRACT DOCUMENTS

A. DESCRIPTION

1. Project: Construction shall consist of providing and installing two (2) new buildings: a CMU block building with EIFS exterior wall system at the Zion Crossroads Water Booster Station and a precast concrete building at the Wastewater Pump Station in Fluvanna County, VA.

2. All work shown on Drawings and/or called for in these Specifications shall be performed under the General Contract, unless specifically noted to the contrary in the Contract Documents. The Project includes, however is not limited to:

a. Zion Crossroads Water Booster Station
   1) CMU block building with EIFS exterior wall system matching existing DOC buildings.
   2) Two (2) horizontal split case water booster pumps.
   3) Emergency backup generator and ATS.
   4) All piping, valves, and appurtenances as indicated on contract drawings.

b. Zion Crossroads Wastewater Pump Station
   1) Precast concrete building.
   2) Two (2) submersible wastewater pumps installed in a precast concrete wetwell.
   3) Emergency backup generator and ATS.
   4) All piping, valves, and appurtenances as indicated on contract drawings.

B. CONTRACTOR's Duties: CONTRACTOR'S duties in performance of the WORK shall include, however are not limited to:

1. Responsibilities: CONTRACTOR shall be:

a. Responsible for the management of the Project.
b. Responsible for hiring all subcontractors.
c. The sole arbitrator of the division of WORK of all trades, associated with WORK provided for in the Contract Documents.

2. Work: Except as specifically noted, provide and pay for all:

a. Labor, materials, and equipment.
b. Tools, construction equipment and machinery.
c. Water, heat, and utilities required for construction.

d. Other facilities and services necessary for proper execution and completion of WORK.

3. Permits and Fees: Secure and pay for, as necessary for proper execution and completion of WORK, and as applicable at time of receipt of Bids:

a. Permits (including building and trade permits),
b. Government fees,
c. Bonds,
d. Licenses
e. Insurance.

4. Notices: Unless specifically indicated otherwise, give required Notices to ENGINEER, government agencies, (local, state and federal), utility companies, OWNER and others as required and within the time frames identified in the Contract Documents.

5. Regulations: Comply with all codes, ordinances, rules regulations, orders, and other legal requirements of public authorities which bear on performance of WORK.

6. Written Notice: Promptly submit Written Notice to ENGINEER of observed conflicts in Contract Documents. It is CONTRACTOR'S responsibility to make certain that all work performed as defined in the Drawings and Specifications comply with codes and regulations.

7. Coordinate: Coordinate WORK with appropriate authorities, *i.e.*, utility companies, Virginia Department of Health (VDH), and Virginia Department of Transportation (VDOT), etc, and other contractors who may be performing other work at the project site of this work or adjacent to this work.

1.2 ADDITIONAL ENGINEERING SERVICES

A. In the event that the ENGINEER is required to provide additional engineering services as a result of CONTRACTOR error or omissions; substitution of materials or equipment by the CONTRACTOR that are different from what is specified that results in change in dimensions, layout, power requirements, etc.; or if the ENGINEER is required to examine and evaluate any changes proposed by the CONTRACTOR for the convenience of the CONTRACTOR; or if the ENGINEER is required to witness retests of project components, then the ENGINEER's charges in connection with such additional services shall be charged to the CONTRACTOR by the ENGINEER.

1.3 AGREEMENT

A. Construct WORK under single, all-inclusive AGREEMENT.

1.4 PLANS AND SPECIFICATIONS

A. Plans and Specifications describe the scope of work for this project. Should there be a conflict between the drawings and specifications the more stringent shall apply.

1.5 LINES, GRADES, AND REFERENCE POINTS

A. Project Stakeout: Lines, grades, elevations, locations, pipe inverts and centerlines, and construction staking necessary for the proper execution of all the WORK specified here in will be established by CONTRACTOR at his expense by a Professional Land Surveyor licensed in the Commonwealth of Virginia.

B. Where the ENGINEER deems that additional survey is required for the proper execution of the Work or verification that the Work was completed per Contract Document requirements, the CONTRACTOR at his expense shall provide this additional survey by a Professional Land Surveyor licensed in the Commonwealth of Virginia.

C. Project Control: Ground control and Field surveying has been established during design of the Project by ENGINEER. These points will be provided only one (1) time upon request. All existing grade stakes, reference lines, etc. destroyed by CONTRACTOR during the progress of its WORK will be replaced at CONTRACTOR'S expense.

D. Field Verification: Where called for on the Drawings and Specifications or, required for accuracy and fit with existing WORK, CONTRACTOR will make its own field measurements to verify any dimensions shown on the Drawings. Consequently, OWNER and ENGINEER present this information only as an approximation and not a guideline. CONTRACTOR shall be responsible for verification prior to submittal.

1.6 RESPONSIBILITY REGARDING EXISTING UTILITIES AND STRUCTURES

A. Tie-ins and Operation of OWNER's Equipment

1. CONTRACTOR shall not make any tie-ins to existing systems whether in service or not without pre-approval from the OWNER and without an OWNER's representative present. CONTRACTOR shall not operate any valves and/or equipment belonging to the OWNER.

B. Existing Structures: The existence and location of underground utilities indicated on the Drawings are not guaranteed and shall be investigated and verified in the field by CONTRACTOR before WORK is begun. Excavation in the vicinity of existing structures and utilities shall be carefully performed by hand if deemed appropriate by CONTRACTOR.

C. Responsibility: CONTRACTOR shall be held responsible for any damages to, and for maintenance and protection of, existing utilities and structures; and, for repair of such to the complete satisfaction of the respective owner(s).

D. Pre-Existing Conditions: For the protection of both itself and OWNER, CONTRACTOR shall make a survey of adjacent properties before commencing operations. Such a survey shall locate all existing cracks and damage to existing structures by means of drawings and photographs. "Tell tales" shall be placed as directed by ENGINEER. In addition, a videotape shall be made by the CONTRACTOR showing the entire project area prior to commencing work, with copies to be submitted to the ENGINEER and OWNER.

E. Documentation: A copy of this report shall be filed with ENGINEER. Any refusal of owner(s) of adjacent property to permit entry for purposes of inspection shall be noted in the report. The purpose of filing the report is to document the pre-existing conditions. Any liability resulting from this documentation as provided by the contract is solely the CONTRACTOR's responsibility.

F. Protection of the Work: CONTRACTOR shall continuously maintain adequate protection of all its WORK and materials from damage or theft and shall protect OWNER'S property and all adjacent property from injury or loss arising in connection with activities provided for this Project. CONTRACTOR shall be liable for any such damage, injury, or loss.

G. Protection of Adjacent Facilities: CONTRACTOR shall take, use, provide, and maintain all necessary precautions, safeguards, and protection to prevent accidents, or injury to persons or property on, about, or adjacent to the site of the WORK. CONTRACTOR shall post danger signs warning against any hazards created by the WORK being done under this CONTRACT. CONTRACTOR shall designate a responsible member of its organization to be responsible for the prevention of accidents on the Project. The name of this person so designated shall be reported in writing to ENGINEER. In an emergency affecting the safety of life, or of the WORK or adjoining property, CONTRACTOR, without special instructions or authorization from ENGINEER or OWNER, is hereby permitted to act, at its discretion, to prevent such threatened loss or injury. It must take such action if so instructed or authorized by ENGINEER or OWNER.

H. Requirements of Law: CONTRACTOR shall also protect adjacent property as required by law.

1.7 APPLICABLE CODES

A. Specified Codes: Whenever reference is made to the furnishing of materials or testing thereof to conform to the standards of any technical organization or body, it shall be construed to mean the latest standard, code, specification, or tentative specification adopted and published at the date of Advertisement for Bids, even if reference has been made to an earlier standard; and such standards are made a part thereof to the extent which is indicated or intended.

B. Non-Specified Codes: When no reference is made to a code, standard, or specification, the standard Specifications of the ASTM, the ASA, the AIEE, the AWWA, or the NEMA or others, as applicable, shall govern.

C. Permits: CONTRACTOR shall be responsible for compliance with all state and local codes and ordinances.

1.8 COORDINATION

A. All WORK shall be coordinated with the OWNER and individual property owners and business owners. At least 48 hours Notice will be given for any WORK involving an existing facility.

1.9 SEQUENCE OF WORK

A. All new lines and equipment shall be tested in accordance with the requirements in the Contract Documents prior to placing into service.

1.10 EQUIPMENT/MATERIAL GUARANTEE

CONTRACTOR shall furnish a written guarantee from the manufacturer of the equipment and material to ENGINEER at the time of completion of WORK and before acceptance of the installation. The guarantee does not apply to any item damaged from misuse, lack of maintenance, alternation, neglect, accident, or wear from normal use.

A. Initial Installation: All equipment/material installed per the Contract Documents shall be free from defect in material or workmanship, and CONTRACTOR shall repair or replace at its expense any such defective equipment for a period of 1 year from the date of Substantial Completion unless otherwise noted in the Contract Documents.

B. After Installation: CONTRACTOR shall be responsible for repair or replacement of any equipment or material which fails to meet the design requirements as specified which are revealed during fabrication, installation, demonstration and/or acceptance testing. Repair or replacement of any such equipment/material shall be completed within 60 days at the expense of CONTRACTOR. Liquidated Damages for failure to complete such repair or replacement within the specified time will be assessed in the manner specified in the General Conditions.

1.11 WORK OUTSIDE REGULAR HOURS

A. If the CONTRACTOR desires to perform work outside the regular hours or on Saturday, he shall request permission 48 hours in advance of the proposed work to allow arrangements to be made for proper inspection. The OWNER reserves the right to refuse, at his discretion, any work request outside the regular house or on a Saturday made by the CONTRACTOR. The OWNER may refuse the CONTRACTOR permission to work if the 48-hour notice is not given. Reasonable efforts shall be made by the CONTRACTOR to avoid undue noise during the night and on Sundays, if it is necessary to work at such times. Under normal circumstances the CONTRACTOR will not be permitted to work on Sundays.

B. Unless specifically scheduled to work outside normal hours by the OWNER in the interest of public safety or convenience, then the CONTRACTOR will be liable for the expense of overtime work required by OWNER's and/or ENGINEER's employees. This expense includes but is not limited to OWNER and ENGINEER called to the job site outside normal working hours to resolve problems directly related to the project. Normal or regular working hours are defined as 7:00 a.m. to 5:00 p.m. Monday through Friday.

C. IF CONTRACTOR anticipates working outside normal work hours, he shall notify the ENGINEER and OWNER as soon as possible, but in no circumstances less than 48 hours in advance.

1.12 MATERIAL SUBSTITUTIONS

A. The specifications and project drawings depict equipment and materials which are deemed most suitable for the service anticipated. It is not intended, however, to eliminate other products of equal quality and performance. The CONTRACTOR shall prepare his bid based on the specified equipment for purposes of determining low bid. Award of a contract shall constitute an obligation to furnish the specified equipment and materials.

B. After execution of the contract, the CONTRACTOR may offer substitutions to the specified equipment for consideration. The equipment proposed for substitution must be equal to or superior in construction and performance to that specified in the contract, and the quality must be demonstrated by a list of at least five (5) current users of the proposed equipment in similar installations in Virginia that have been in service for a minimum of five (5) years.

C. In event the CONTRACTOR obtains ENGINEER's approval for equipment substitution, the CONTRACTOR shall, at his own expense, make all resulting changes to any enclosures, buildings, piping or electrical systems as required to accommodate the proposed equipment. CONTRACTOR shall at his own expense provide detail drawings illustrating the substituted equipment to be submitted to the ENGINEER for approval prior to acceptance.

D. Should the substitution not be acceptable to the OWNER or ENGINEER, the CONTRACTOR shall resubmit the original equipment specified. The CONTRACTOR shall be responsible for all additional costs accrued by the ENGINEER and OWNER associated with any substitution.

E. If the cost to the CONTRACTOR is less for the proposed substitution, the saving shall be equably shared by the CONTRACTOR and the OWNER.

1.13 Storage

A. CONTRACTOR shall store all materials and equipment in accordance with all manufacturers' recommendations. CONTRACTOR shall include in his submittal package the manufacturers' recommended long term and short term storage procedures. Storage procedures shall extend to equipment installed but not put into service and shall continue until project completion.

PART 2- **PRODUCTS** (Not Applicable).

PART 3- **EXECUTION** (Not Applicable).

END OF SECTION

SECTION 01013
MOBILIZATION

PART 1- GENERAL

1.1 RELATED DOCUMENTS

A. Drawings and general provisions of Contract, including General and Supplementary Conditions, and other Division 1 Specifications Sections, apply to this Section.

1.2 DESCRIPTION

A. The work covered by this section consists of preparatory work and operation, including but not limited to those necessary for the movement of personnel, equipment, trailers, sanitary facilities, temporary electric supplies, and other facilities necessary for work on the project; video taping of job site; and for all other work and operations which must be performed or costs incurred prior to beginning work on the various items on the project site.

PART 2- PRODUCTS

2.1 VIDEO TAPE

A. High definition digital recording shall be used.

PART 3- EXECUTION

3.1 VIDEO TAPING

A. Format - The entire project site shall be video taped prior to beginning work and the video tape(s) provided to the OWNER's Representative. CONTRACTOR shall provide video camera and experienced cameraperson who shall walk the entire site. The taping shall be done on a sunny day to provide a clear video. Each taped segment shall begin with the cameraperson verbally noting "Project Name, Company, Camera person's Name, the Date, Time and Brief Description of Segment to be Taped". Each video tape shall be clearly labeled as to project name, date, and volume. Provide log of each video tape which will include footage milestones and segments covered in that volume.

B. Acceptance - Video tape(s) prepared by the CONTRACTOR shall be delivered to the OWNER's Representative at the preconstruction conference for review. Within seven (7) days of receipt the OWNER's Representative shall review tape to determine and notify the CONTRACTOR if the video is acceptable. Video tape(s) shall be acceptable prior to beginning work. Video recordings shall become the property of the OWNER.

END OF SECTION

SECTION 01200
PRICE AND PAYMENT PROCEDURES

PART 1- GENERAL

1.1 SCOPE

Under this section of the specifications, the CONTRACTOR shall furnish all necessary labor, machinery, apparatus, tools, materials, equipment, services, and other necessary supplies and perform all work including excavation and backfilling at the unit or lump sum prices for the following items.

PART 2- PRODUCTS

2.1 PAYMENT FOR STORED MATERIALS

A. Payment will be made for materials stored on-site in accordance with requirements of Contract Documents and for which a paid invoice or other proof of payment is provided.

B. All stored materials shall be stored in strict accordance with manufacturer's long term storage requirements. Contactor shall submit a maintenance schedule for stored materials to the ENGINEER for approval. Maintenance schedule shall be approved by the manufacturer in writing. No payment for stored material shall be made without the receipt of the above and approved by OWNER and/or ENGINEER.

C. The Maintenance schedule shall be strictly adhered to, witnessed by the OWNER's representative and documented as having been completed. Should the maintenance schedule not be adhered to, payment for additional stored materials shall be withheld from pay applications until the situation is corrected.

D. Payment for stored materials shall be subject to retainage.

2.2 ITEMS INCIDENTAL TO THE WORK

A. Any item not specifically referenced in the Bid Schedule but required by the plans and specifications shall be considered incidental to the work. The cost for these items shall be included in the most appropriate Bid Item.

2.3 BID FORM ITEMS

A. The bid price shall be for furnishing all products (excluding all other items listed below), and perform all labor and furnishing equipment to install and erect those products and that equipment, for the construction of the Work as shown and specified including all site work, piping, valving, electrical, mechanical, plumbing, building improvements, building additions, new buildings, concrete work, and all other work shown or specified.

B. The bid price will be based on furnishing equipment and materials in compliance with the specifications. Should the CONTRACTOR fail to provide a manufacturer of equipment

which complies with the specifications, the OWNER reserves the right to select approved specified equipment of his choice without an increase in the contract price.

C. The CONTRACTOR shall be solely responsible for ensuring that all equipment meets all requirements in the technical specifications. If, during shop drawing submittal review, it is found that a manufacturer does not meet the requirements of the technical specifications, the CONTRACTOR shall be responsible for all additional costs to remedy the situation without an increase in the contract price or schedule duration.

PART 3- EXECUTION

3.1 PAY ITEMS

A. The items listed herein before are the same items listed in the Bid herein before and constitute all of the pay items in this contract. Any other items of work listed in the Specifications, or shown on the Drawings, shall be considered incidental to the above items.

3.2 REQUIREMENTS FOR PARTIAL PAYMENTS

A. Partial Payment requests will be made on an approved form. The CONTRACTOR will attach copies of invoices for all materials included in the Payment Request. Payments will be made on all major items of materials stored on site; however, the OWNER will not pay for miscellaneous incidental materials stored on site, nor for any materials stored off site.

B. The effective date for Partial Payment shall be established during the Pre-Construction Conference. Requests for payment shall be evaluated on the basis of work completed as of the effective date, not on the basis of projected work completed.

C. Retainage for Partial Payments from the OWNER shall be in accordance with the General Conditions.

D. The work to be performed under the Contract will commence with the date established in the Notice to Proceed. Substantial Completion shall be achieved within the time period stated in the Bid Proposal.

E. Prior to the Pre-Construction Conference, the CONTRACTOR shall submit the following:

1. List of principal Subcontractors and Suppliers
2. Schedule of Values
3. Progress Schedule and first progress report
4. Schedule of Submittals and Shop Drawings
5. Copies of building permits, other required permits, and similar start-up authorization certifications

3.3 FINAL PAYMENT

A. Final Payment may be requested when the ENGINEER is satisfied and the following conditions have been fulfilled:

1. Complete close-out requirements shall be in accordance with Division 1.

2. Complete work listed as incomplete at time of Substantial Completion or otherwise assure OWNER of subsequent completion of individual incomplete items. Cost of uncompleted items required under the contract shall be assessed by the ENGINEER and an amount equal to double the estimated cost to complete the item(s) shall be withheld until the work is completed and approved by the ENGINEER.

3. Settle liens and other claims or assure OWNER of subsequent settlement. Execute and submit to ENGINEER for approval, five (5) copies each of Contractor's Affidavit of Payment of Debts and Claims and Contractor's Affidavit of Release of Liens.

4. Submit proof of payment on fees, taxes, and similar obligations.

5. Transfer operational, access, security, and similar provisions to OWNER and remove temporary facilities, tools, and similar items.

6. Obtain consent of surety for final payment. Execute and submit to ENGINEER for approval, five (5) copies of Consent of Surety to Final Payment.

END SECTION

SECTION 01310
PROJECT MEETINGS

PART 1 - GENERAL

1.1 RELATED DOCUMENTS

A. Drawings and general provisions of the Contract, including General and Supplementary Conditions and other Division 1 Specification Sections, apply to this Section.

B. Project meeting minutes will be taken and distributed by the Engineer.

1.2 SUMMARY

A. This Section specifies administrative and procedural requirements for project meetings, including, but not limited to, the following:

1. Preconstruction conferences.
2. Pre-installation conferences.
3. Progress meetings.
4. Coordination meetings.

B. Related Sections: The following Sections contain requirements that relate to this Section:

1. Division 1 Section "Submittals" for submitting the CONTRACTOR's Construction Schedule.

1.3 PRECONSTRUCTION CONFERENCE

CONTRACTOR shall schedule and hold the conference at the Project Site or another convenient location agreeable to OWNER and ENGINEER. Conduct the meeting to review responsibilities and personnel assignments.

A. Attendees: Authorized representatives of the OWNER, OWNER's Representative, ENGINEER, and other consultants; the CONTRACTOR and its superintendent; major subcontractors; manufacturers; suppliers; funding agency representatives; and other concerned parties shall attend the conference. All participants at the conference shall be familiar with the Project and authorized to conclude matters relating to the Work.

B. Agenda: Discuss items of significance that could affect progress, including the following:

1. Sign-in and agenda.

2. Introduction of official representatives.

3. Status of contract documents.

a. Contracts.
b. Notice to Proceed.

4. Contract time issues.

   a. Total contract time.
   b. Project schedule.

5. Contract price issues.

   a. Status of contract price.
   b. Schedule of values.
   c. Payment requests.
   d. Change in the work.

6. Submittals.

7. Responsibilities of each stakeholder.

   a. OWNER's representative.
   b. OWNER.
   c. CONTRACTOR.
   d. Funding Agency

8. Comments, questions, discussion points.

1.4 PRE-INSTALLATION CONFERENCES

A. Conduct a pre-installation conference at the Project Site before each construction activity that requires coordination with other construction. In addition to those listed below, any additionally required meetings will be determined during the preconstruction conference.

B. Pre-installation meetings shall consist of, but are not limited to, the following:

   1. Floor slabs

C. Attendees: The Installer and representatives of manufacturers and fabricators involved in or affected by the installation, and its coordination or integration with other materials and installations that have preceded or will follow, shall attend the meeting. Advise the OWNER's Representative of scheduled meeting dates.

   1. Review the progress of other construction activities and preparations for the particular activity under consideration at each pre-installation conference, including requirements for the following:

      a. Sign-in sheet and agenda distribution.
      b. Review of minutes from the previous meeting.
      c. Status of contract time.
      d. Status of contract price.
      e. Status of submittals.
      f. Status of RFI's.
      g. Status of change orders.
      h. OWNER's concerns.

i. CONTRACTOR's concerns.
j. Engineer's concerns.
k. Schedule next meeting (as needed) and close.
l. Site visit.

2. Record significant discussions and agreements and disagreements of each conference, and the approved schedule. Promptly distribute the record of the meeting to everyone concerned, including the OWNER and the OWNER's Representative.

3. Do not proceed with the installation if the conference cannot be successfully concluded. Initiate whatever actions are necessary to resolve impediments to performance of Work and reconvene the conference at the earliest feasible date.

1.5 PROGRESS MEETINGS

Can be requested and coordinated by CONTRACTOR, OWNER, OWNER's Representative, or ENGINEER as the need arises. Otherwise:

A. Conduct progress meetings at the Project Site at regular intervals no greater than every 30 days. The OWNER and the OWNER's Representative and CONTRACTOR shall agree on the schedule for monthly meetings.

B. Attendees: In addition to the OWNER and the OWNER's Representative, each subcontractor, supplier, funding agency or other entity concerned with current progress or involved in planning, coordination, or performance of future activities shall be represented at these meetings. All participants at the conference shall be familiar with the Project and authorized to conclude matters relating to the Work.

C. Agenda: Review and correct or approve minutes of the previous progress meeting. Review other items of significance that could affect progress. Include topics for discussion as appropriate to the status of the Project.

1. CONTRACTOR's Construction Schedule: Review progress since the last meeting. Determine where each activity is in relation to the CONTRACTOR's Construction Schedule, whether on time or ahead or behind schedule. Determine how construction behind schedule will be expedited; secure commitments from parties involved to do so. Discuss whether schedule revisions are required to insure that current and subsequent activities will be completed within the Contract Time.

2. Review the present and future needs of each entity present, including the following:

a. Interface requirements.
b. Time.
c. Sequences.
d. Schedule
e. 30-day "Look Ahead"
f. Status of submittals.
g. Deliveries.

h. Off-site fabrication problems.
i. Access.
j. Site utilization.
k. Temporary facilities and services.
l. Hours of work.
m. Hazards and risks.
n. Housekeeping.
o. Quality and work standards.
p. Change Orders.
q. Documentation of information for payment requests.

D. Reporting: After each meeting, the ENGINEER will distribute minutes of the meeting to each party present and to parties who should have been present. Include a brief summary, in narrative form, of progress since the previous meeting and report.

1. Schedule Updating: Revise the CONTRACTOR's Construction Schedule after each progress meeting where revisions to the schedule have been made or recognized. Issue the revised schedule concurrently with the report of each meeting.

1.6 COORDINATION MEETINGS

A. Conduct project coordination meetings at regular intervals convenient for all parties involved. Project coordination meetings are in addition to specific meetings held for other purposes, such as regular progress meetings and special pre-installation meetings.

B. Request representation at each meeting by every party currently involved in coordination or planning for the construction activities involved.

C. Record meeting minutes and results, and distribute copies to everyone in attendance and to others affected by decisions or actions resulting from each meeting.

1.7 MEASUREMENT AND PAYMENT

A. Payment for work described in this section shall be based on the schedule of values and approved completion percentages of the various bid items for this project. No direct measurement shall be made.

PART 2 - PRODUCTS

Not Applicable.

PART 3 - EXECUTION

Not Applicable.

END OF SECTION

SECTION 01320
SCHEDULING OF CONSTRUCTION

PART 1 - GENERAL

1.1 SUMMARY

This Specification shall cover all work on the project including work on or at existing facilities which must remain in operation.

A. Intent: It shall be CONTRACTOR'S responsibility to propose a construction schedule to complete all work in the contract completion time noted in the Information for Bidders and as supplemented herein.

B. Existing Facility: It shall be CONTRACTOR'S responsibility to ensure that existing facilities remain in operation at all times during construction. The CONTRACTOR shall provide all necessary bypass pumping, temporary facilities, equipment, and utilities required to allow for uninterrupted operation of the existing facility during construction.

C. Use of Facility: OWNER shall have the right to the use of completed facilities as they become available, this shall not relieve CONTRACTOR of his responsibility to complete work on any such facilities.

D. Sequence of Construction: It shall be CONTRACTOR'S responsibility to sequence construction as needed to incorporate the Work into existing facilities without interrupting operation of the existing facility.

E. Schedule: The CONTRACTOR is responsible for the sequencing, scheduling and coordinating of the Work, for monitoring the progress of the Work, and for taking appropriate action to keep the Work on schedule. The CONTRACTOR shall prepare and submit a preliminary schedule for accomplishing the Work based upon the completion time stated in the Contract. A copy of the preliminary schedule will be available at the Pre-Construction Conference. A fully complete progress schedule for accomplishing the work must be submitted in like manner no later than thirty (30) days after signing the Contract. No progress payments will be made to the CONTRACTOR until after he has submitted a preliminary schedule which is acceptable to the OWNER. Neither the second progress payment nor any subsequent payment shall be made to the CONTRACTOR until he has submitted a fully complete and updated progress schedule.

F. Failure to provide a satisfactory preliminary or final schedule for accomplishing the Work within the time provided above shall be a breach of contract for which the OWNER may terminate the Contract in the manner provided in the General Conditions.

1. The schedule shall indicate the estimated starting and completion dates for each major element of the work. The actual progress of those elements of the work will be reported monthly at the time of submission of the request for payment. If any elements of the Work are behind schedule, regardless of whether they may prevent the Work from being completed on time, the CONTRACTOR must indicate in writing what measures he is taking and plans to take to bring each

such element back on schedule and to insure that the time of completion is not exceeded.

2. In the event the completion date indicated by the schedule exceeds the Contract completion date, the assumptions and time estimates used to develop the schedule and plan will be reviewed, changes made, and a new schedule developed. This procedure shall be repeated, as necessary, to provide a Plan and Schedule meeting the Contract completion date.

G. Project Control: The CONTRACTOR shall review progress no less than each month, but as often as necessary to properly manage the project and stay on schedule. The CONTRACTOR shall collect and preserve information on Change Orders, including extensions of time. The CONTRACTOR shall evaluate this information and update the schedule as necessary to finish within the contractually allowed time. The scheduled completion date shall be within the period of time allowed by the Contract for completion of construction, as amended by Change Order.

H. Progress Graph: A progress graph showing the work completed to date in comparison with the work scheduled for completion and the overall project work schedule shall be provided with each monthly request for payment. The form of the graph shall be approved by the Engineer and the OWNER; however, a bar graph/chart or a CPM schedule marked, colored or annotated to reflect the above will usually satisfy this requirement.

I. Progress Delay: Should any of the following conditions exist, the Engineer or OWNER may require the CONTRACTOR to prepare, at no extra cost to the OWNER, a plan of action and a recovery schedule for completing the Work by the contractual completion date. The plan of action and recovery schedule shall explain and display how the CONTRACTOR intends to regain compliance with the original schedule. The plan of action and recovery schedule, when required, shall be submitted and approved prior to submission of the next monthly request for payment.

1. Should the CONTRACTOR's monthly progress report indicate delays such that a recovery schedule is required.

2. Should the schedule show the CONTRACTOR to be thirty (30) or more days behind schedule at any time during construction up to thirty (30) days prior to the scheduled substantial completion date.

3. Should the CONTRACTOR request to make changes in the schedule which, in the opinion of the Engineer or the OWNER, are of a major nature.

J. The CONTRACTOR shall prepare a schedule satisfactory to the Engineer and the OWNER fixing the dates for the beginning and completion of the placing of orders for and the manufacture, the testing and the installation of materials, supplies and equipment, which schedule shall be subject to change from time to time in accordance with the progress of the work.

K. The CONTRACTOR shall plan on four (4) days each month during allowable work days where work on items on the critical path for the completion of the project will be delayed due to weather. The four (4) days per month shall be a cumulative amount that will apply

to each month of the project to Substantial Completion, resulting in a total number of weather days built into the construction timeline to be calculated as four (4) days per month multiplied by the number of days to Substantial Completion, divided by 30 calendar days per month. If the total number of weather days encountered through the duration of the project exceeds the allotted number of weather days as calculated above, then the CONTRACTOR may request for a time extension to the contract time. Request for time extensions due to abnormal weather will not be approved by the OWNER unless work on items on the critical path are impacted by weather that causes delays of more than four (4) days in a given month. A request for an extension in contract time for delays to work on items not on the critical path caused by weather will not be considered. It is the CONTRACTOR's responsibility to document the days where critical path work was impacted by weather, the critical path work that was impacted, and the nature of the delay caused by weather. Extensions in time requested due solely to high moisture content of soils from earlier precipitation events will only be considered if the CONTRACTOR is making reasonable efforts, as judged in the sole opinion of the ENGINEER, to dry soils. The CONTRACTOR shall make any request for an extension in contract time due to weather at the next progress meeting following the abnormal weather day(s). If a request is not made at a progress meeting, no extension in time for abnormal weather will be approved for the period of time since the last progress meeting. The CONTRACTOR shall be required to coordinate with the INSPECTOR to verify that weather had a negative impact and prohibited work within two (2) business days of the weather event; providing documentation that the weather event negatively impacted the critical path with be the sole responsibility of the CONTRACTOR.

1.2 RELATED SECTIONS

A. Intent: The provisions and intent of the AGREEMENT, including the General Conditions, Supplementary Conditions, and other requirements of the Contract Documents apply to the WORK as specified in this Section. WORK related to this Section is described throughout the Specifications.

1.3 SUBMITTALS

A. Project Schedule: CONTRACTOR will provide a tentative project schedule at the Pre-Construction Conference for discussion. Progress graphs and updated schedules shall be submitted as required.

B. Demolition and Plan: CONTRACTOR shall submit for ENGINEER'S and OWNER'S approval a demolition plan, if demolition is included in the project, including sequence of events to prevent disruption of the existing unit operation during construction.

C. Project Cost Breakdown: CONTRACTOR shall submit for ENGINEER'S and OWNER'S approval a tabulated cost breakdown of the project (Schedule of Values). The cost breakdown will be a format, using lump sum, units, unit pricing, etc. such that ENGINEER and OWNER will be able to assess the percentage of completion of the project and determine a prorated payment for work in place and materials on hand for each pay period. CONTRACTOR shall submit a draft of the cost breakdown at the Pre-Construction conference for discussion.

D. List of Shop Drawing Submittals: CONTRACTOR shall submit for ENGINEER'S and OWNER'S approval a list of Shop Drawing submittals for project at the Pre-Construction Conference. The submittals will be arranged by technical specification section.

PART 2 - PRODUCTS

Not Applicable.

PART 3 - EXECUTION

Not Applicable.

END OF SECTION

SECTION 01330
SUBMITTAL PROCEDURES

PART 1- GENERAL

1.1 GENERAL REQUIREMENTS

A. The CONTRACTOR shall provide samples and shop drawings for all materials and equipment furnished and installed under this contract as described in the specifications in accordance with the following requirements. When the Work of the Project is divided into separate Contracts, each Prime CONTRACTOR shall provide submittals directly to the ENGINEER. No materials shall be used in the work which do not equal the approved samples or shop drawings.

B. Transmit each item with a Submittal cover attached.

1. Number submittals by specification section and revision number (e.g. 01330-1 for initial submission of schedule of submittals.)
2. Submit only one item per transmittal cover.
3. CONTRACTOR shall identify all deviations from the Contract Documents by paragraph number, and provide an explanation/justification for deviation.
4. Incomplete submittals or submittals without identified deviations will be returned un-reviewed.

C. Materials or appliances requiring approval must not be fabricated or incorporated into the work until approval has been given. The approval or acceptance of samples shall not preclude the rejection of any material upon the discovery of defects prior to the final acceptance of the complete work.

D. After a material has been approved, no change in brand or manufacturer will be permitted unless satisfactory written evidence is presented to, and approved by the ENGINEER, that the manufacturer cannot make scheduled delivery of approved material, or that other conditions are apparent which indicate the approval of such substitute materials to be in the best interest of the OWNER.

E. Samples, shop drawings, material lists, manufacturers' literature, and other required information shall be submitted in sufficient time, and clearly marked, to permit proper consideration and action on same before any materials which such samples, shop drawings, and information represent are delivered to the site. The CONTRACTOR shall be held responsible for any delay in the progress of the Work which may be due to his failure to observe these requirements.

F. Shop drawings and samples shall be submitted to the ENGINEER in sufficient quantity to permit the ENGINEER to retain four (4) copies and return the number of copies required by the CONTRACTOR.

G. Any submittal which requires the selection of color by the ENGINEER shall be submitted such that all color selections can be made at the same time. Submittals shall be held by the CONTRACTOR for a single submittal of all items requiring color choice or

sufficient time will be allowed for the ENGINEER to receive all submittals to prepare a comprehensive color selection.

H. Shop drawings shall include installation instructions and long and short term storage requirements.

I. No payment shall be made for unapproved materials or equipment purchased or installed by the CONTRACTOR even if the materials or equipment meet all the requirements of the specifications and/or is the named product or equipment.

J. See General Conditions GC 6.17 for additional submittal requirements.

1.2 SAMPLES

A. Samples and mock-ups shall be submitted in duplicate except where a greater number is specifically required by the specifications.

B. Samples and manufacturers' literature shall be forwarded (prepaid) to ENGINEER's office accompanied with a transmittal letter containing the following information: name of project, contractor, description of product, manufacturer, model number, ASTM or Federal Specification number where applicable. Catalogs shall be marked to indicate specific items submitted for approval.

C. Samples which are rejected by the ENGINEER must be re-submitted as soon as possible after notification of rejection and shall be marked "Re-submitted Sample" in addition to other required information.

D. Engineer shall have the right to require submission of samples of any material or any material lists, whether or not particularly mentioned in the Specifications.

1.3 SHOP DRAWINGS

A. Submission of shop drawings shall comply with the following requirements:

1. The shop drawings shall be clearly marked and submitted sufficiently in advance of the work which they cover to afford ample time for checking, correcting, and rechecking if necessary. No claim for delay will be granted to the CONTRACTOR if caused by his failure to comply with the requirements of this Section.

2. Before submitting for approval, the CONTRACTOR shall check all shop drawings, including those submitted by subcontractors, for accuracy and to ascertain that all work contiguous with and having bearing on other work shown on the shop drawings is accurately drawn, and that the work shown is in conformity with the contract requirements.

3. Shop drawings submitted for approval shall bear the CONTRACTOR's stamp of approval as evidence that such drawings and details have been checked by the CONTRACTOR. The submission of shop drawings (in either the original submission or when resubmitted with corrections) constitutes evidence that the CONTRACTOR has checked all information therein, and that he accepts and is

willing to perform the work, as shown, in a workmanlike manner and in accordance with the best standard practices.

4. No claim for an extra shall be based on work shown on the shop drawings. Note: all claims for extra shall be submitted by procedures established elsewhere.

B. The CONTRACTOR's approval stamp shall contain the following statement:

"The equipment and material shown and marked in this submittal is that proposed to be incorporated into this Project, and has been checked for and is in compliance with the Contract Documents unless otherwise shown in bold face type or lettering and listed on a page or pages headed "DEPARTURES FROM CONTRACT DOCUMENTS," and can be installed in the allocated spaces.

Checked By: _____ *Date:* _____

The person signing the stamp shall be one designated in writing by the CONTRACTOR as having that authority. The signature shall be handwritten in ink. Stamped signatures are not acceptable.

1. The ENGINEER's approval of shop drawings and schedules shall not relieve the CONTRACTOR from responsibility for deviation from drawings and specifications. The ENGINEER's approval shall not relieve CONTRACTOR from responsibility for errors of any sort on shop drawings or schedules.

C. ENGINEER'S ACTION:

1. Review is only for conformance with the design concept of the project. Markings or comments do not relieve the CONTRACTOR from compliance with the contract documents nor allow departure therefrom. The CONTRACTOR remains responsible for details and accuracy, for confirming and correlating all quantities and dimensions, for selecting fabrication processes, for technique of assembly, for coordination of the work with all trades, and for performing this work in compliance with the contract documents.

2. Where action and return is required or requested, ENGINEER will review each submittal, mark with "Action".

3. Final Unrestricted Release: Work may proceed, provided it complies with Contract Documents, when submittal is returned with the following marking:

   "Reviewed No Exceptions"

4. Final-But-Restricted Release: Work may proceed, provided it complies with notations and corrections on submittal and with Contract Documents, when submittal is returned with the following marking:

   "Reviewed Exceptions Noted"

5. Returned for Re-submittal: Do not proceed with work. Revise submittal in accordance with notations thereon, and resubmit without delay to obtain a

different action marking. Do not allow submittals with the following marking (or unmarked submittals where a marking is required) to be used in connection with performance of the work:

"Revise and Resubmit"

6. Returned for Non-Compliance: Do not proceed with work. Product submitted does not comply with Contract Documents. Resubmit for product complying with the requirements of the Contract Documents. Do not allow submittals with the following marking to be used in connection with performance of the work:

"Not Approved" or "Rejected"

1.4 REQUESTS FOR INFORMATION

A. CONTRACTOR shall submit to ENGINEER and OWNER, in writing, any requests for information (RFI) on the form contained in the Project Manual.

B. ENGINEER and OWNER shall review RFI within 7 days and, once a response has been agreed upon, the ENGINEER shall respond to the RFI in writing to the CONTRACTOR.

C. If a question is not submitted to the ENGINEER and the OWNER in writing, than any response made by the ENGINEER or OWNER is not binding. Only written responses will have the authority to change and/or clarify the Contract Documents.

D. If the response to the RFI will require a change in the Contract Documents that results in a change to the Contract Time or Price, the CONTRACTOR shall follow those procedures as outlined in the Contract Documents for submission of a change request. Any change requests will be subject to review and approval from the ENGINEER and OWNER.

PART 2- PRODUCTS

Not Applicable

PART 3- EXECUTION

Not Applicable

END OF SECTION

SECTION 01400
TESTING AND SPECIAL INSPECTIONS

PART 1- GENERAL (NOT APPLICABLE)

PART 2- PRODUCTS (NOT APPLICABLE)

PART 3- EXECUTION

3.1 TESTING AND SPECIAL INSPECTIONS

A. All Special Inspections as required by the Fluvanna County Building Inspections Office will be the responsibility of the OWNER. A list of Special Inspections has been included as part of the Appendix of these documents. These inspections apply to the pump station buildings only.

B. All other testing, special inspections, sampling, etc. as required by these Contract Documents and necessary for the completion of the WORK will be the sole responsibility of and paid for by the CONTRACTOR.

C. This specification section supersedes any testing or inspection responsibilities outlined in other specification sections of these Contract Documents.

D. The CONTRACTOR shall submit copies of all test and inspection results to the ENGINEER and OWNER within 24 hours of receiving such information. If a failing result is received, the CONTRACTOR shall submit a subsequent test result or documentation showing how any deficiency was corrected.

END OF SECTION

SECTION 01500
TEMPORARY FACILITIES AND CONTROLS

PART 1 - GENERAL

1.1 SUMMARY

A. Refer to General Conditions for requirements for the CONTRACTOR to provide temporary facilities as required for performance of the Work and fulfillment of the Contract. This section specifies certain minimum temporary facilities to be provided by CONTRACTOR regardless of methods and means selected for performance of the Work. This section is not intended to limit the CONTRACTOR's provisions for temporary facilities nor does it assure compliance with local governing regulations. Use of alternate provisions for temporary facilities is the CONTRACTOR's option, subject to the ENGINEER's acceptance. Temporary facilities are defined to exclude tools and construction machines, testing, demolition, alterations, soil borings, mock-ups and similar items.

1.2 SEPARATE PRIME CONTRACTORS

A. The CONTRACTOR will be responsible for maintaining temporary facilities. The CONTRACTOR will be responsible for all temporary facilities described herein as part of this WORK.

B. The CONTRACTOR will be responsible for providing his own Field Office and Materials Storage.

C. Installation of temporary electrical and water service shall be provided by the CONTRACTOR.

1.3 RELATED SERVICES

A. Intent: The provisions and intent of the AGREEMENT, including the General Conditions, Supplementary Conditions, and other requirements of the Contract Documents apply to the WORK as specified in this Section. WORK related to this Section is described throughout the Specification.

PART 2 - PRODUCTS

2.1 MATERIALS STORAGE

A. Provide suitable and sufficient enclosed and covered spaces, with raised flooring, to protect materials and equipment subject to damage by weather or construction. Materials stored on site which have not been properly protected will not be acceptable for use in construction or approved for payment.

2.2 FENCING AND BARRICADES

A. Provide fences and barricades and protection devices sufficient to prevent injury to persons or damage to property in accordance with Safety Requirements of applicable standards, codes, ordinances, and insurance agencies.

B. Provide temporary walkways as necessary for safe, uninterrupted pedestrian traffic.

2.3 SCAFFOLDING AND SHORING

A. Provide scaffolding, ramps, runways, platforms, guards, rails, stairs, and ladders as necessary for this work.

B. Meet safety requirements of applicable Virginia and County standards, codes, and ordinances.

C. Provide lights and signs to prevent damage or injury.

D. Provide all shoring, bracing and sheeting as required for safety and proper execution of the Work. Remove when no longer required.

2.4 LIFTING AND HOISTING

A. Provide hoists, temporary elevators, lifts, cranes, and towers necessary for expediting the handling of materials.

2.5 TOILETS

A. Provide adequate and sanitary temporary outside toilet facilities for use of persons working at site. Provide toilet facilities with adequate light and ventilation and toilet tissue in suitable holder. Comply with applicable legal and health requirements. Toilet facilities shall be secluded from public observation and shall not create nor allow a public nuisance. Temporary sanitary facilities shall be removed upon completion of the work and the premises shall be left clean. Workmen shall not use permanent washroom facilities in existing facilities or new work except by written permission of the OWNER.

2.6 ELECTRICITY

A. Make arrangements for, and provide temporary equipment, poles, wiring, switches, and outlets necessary to provide an adequate supply of electricity for lighting and power for construction purposes. Cost of temporary service shall be borne by the CONTRACTOR.

B. The CONTRACTOR shall make arrangements for meter installation, service connections, and wiring to meet the requirements of the completed project.

2.7 WATER

A. Make arrangements for, and provide temporary equipment and piping necessary to provide an adequate supply of water for construction purposes. Cost shall be borne by the CONTRACTOR. CONTRACTOR shall be responsible for providing water for flushing and testing activities.

B. The CONTRACTOR shall make arrangements for main connection, and incoming pipes to meet requirements of the completed project.

2.8 HEAT

A. The CONTRACTOR shall provide temporary heat during the course of the project to provide protection for the workmen and all installed materials and equipment during cold weather. The technical specifications outline minimum temperatures required for various portions of the Work.

B. The CONTRACTOR shall pay for fuel and attendance of the permanent heating system for all heat during construction to maintain the integrity of the building and all installed equipment until the project is accepted by the OWNER as Substantially Complete.

C. Temporary Heating shall be of a type approved by the ENGINEER and complying with all applicable safety and fire code regulations.

2.9 PUMPING AND DRAINING

A. Provide pumping equipment to keep construction and storage areas free from standing water that could cause damage or that would interfere with the work.

2.10 ACCESS

A. The Project Site shall at all times be accessible for delivery of construction materials and equipment. Maintenance of access points and access roads, loading and unloading areas and directional signage shall be the responsibility of the CONTRACTOR.

B. Provide signage and barricades to clearly and safely direct pedestrian and construction traffic.

C. Any damage to existing paved surfaces, curbing, landscaping, etc. shall be restored or repaired by the CONTRACTOR.

D. Stabilize parking areas and access roads with a base of crushed stone as soon as practicable after finish grading.

2.11 FINISHES

A. The CONTRACTOR shall protect all finished surfaces, including the jambs and soffits of all openings used as passageways or through which materials are handled, against any possible damage resulting from the conduct of work by all trades.

B. All finished surfaces, including factory finished and job finished items, shall be clean and not marred upon delivery of the building to the OWNER. CONTRACTOR shall be responsible for its Subcontractors compliance with this section.

C. Protect all types of finished floor surfaces in traffic areas with plywood, planking, reinforced non-staining kraft paper, or other approved material.

2.12 FIRST AID FACILITIES AND ACCIDENTS

A. First Aid Facilities

1. The CONTRACTOR shall provide at the site, such reasonable equipment and facilities as are necessary to supply first aid to any of his personnel who may be injured in connection with the work.

B. Accident

1. The CONTRACTOR shall promptly report in writing to OWNER and ENGINEER all accidents whatsoever arising out of, or in connection with, the performance of the work, whether on or adjacent to the site, which cause death, personal injury or property damage, giving full details and statements of witnesses.

2. If death or serious injuries or serious damages are caused, following notification of the appropriate emergency services and agencies, the accident shall be reported immediately by telephone or messenger to both the OWNER and the ENGINEER.

3. If any claim is made by anyone against the CONTRACTOR or a subcontractor on account of any accidents, the CONTRACTOR shall promptly report the facts in writing to the OWNER and ENGINEER, giving full details of the claim.

2.13 BARRICADES, WARNING SIGNS AND LIGHTS

A. General

1. CONTRACTOR shall provide, erect and maintain as necessary, strong and suitable barricades, fencing, danger signs and warning lights and as may be required for the safety of all those employed in the work, visiting the construction site, and for the general public.

B. Accommodation of Traffic

1. All work in the VDOT right-of-way or local right-of-ways shall be done in accordance with VDOT regulations or local regulations.

2. During the progress of the work, streets, driveways, sidewalks, and crossings shall be kept open for the passage of traffic and pedestrians and shall not be unnecessarily obstructed unless authorized by the authority having jurisdiction over same. The CONTRACTOR shall take such measures at his own expense, as may be necessary to keep the street open for traffic, and shall give advance notice to the Fire and Police Departments of his proposed street operations.

3. Warning signs shall be provided along all highways while work is in progress; and where traffic direction is required flagmen shall be designated by the CONTRACTOR to direct traffic past the equipment, machinery, or construction operations. Barricades and lights shall be provided as required to protect traffic. Where trenches have been cut in road shoulders on which traffic may pass at

times, red flags and warning signs shall be placed at frequent intervals and maintained until the shoulder is safe for travel. The traveling public shall be warned of the construction with signing that is in accordance with VDOT policy.

4. The CONTRACTOR shall notify the VDOT five working days in advance of work in highway right-of-way, and shall fully cooperate with the Department.

5. The CONTRACTOR shall construct and maintain, without extra compensation, such adequate and proper bridges over excavations as may be necessary or directed for the purpose of accommodating pedestrians or vehicles.

6. All temporary means constructed by the CONTRACTOR for maintaining traffic shall be removed upon completion of the work unless otherwise specified by the ENGINEER and any damage done to public or private property shall be made good by the CONTRACTOR.

7. All dirt spilled from the CONTRACTOR's trucks on existing pavements over which it is hauled or which has otherwise been deposited thereon shall be removed by the CONTRACTOR at the end of the work day.

2.14 PUBLIC CONVENIENCE AND PROTECTION

A. During progress of the work, the convenience and protection of the public must be provided for, and interferences held to a minimum.

B. The CONTRACTOR shall, at all times, conduct the work in such a manner as to insure the least practicable obstruction to public travel. The convenience of the general public and of the residents along or adjacent to the area of the work shall be provided for in a satisfactory manner, consistent with the operation and local conditions. Road and streets must be kept open at all times or suitable detours provided. Access to fire hydrants and other fire extinguishing equipment shall be provided and maintained at all times.

C. When necessary, for the protection of the public, the CONTRACTOR shall provide watchmen and/or lights to burn between twilight and sunrise, and shall erect and maintain barriers and all other necessary protection around the work at his own expense. He shall also take other precautions as may be necessary to protect life, and property. The OWNER reserves the right to remedy any neglect on the part of the CONTRACTOR as regards to the protection of the work after twenty-four (24) hours notice in writing; and, in cases of emergency, the OWNER shall have the right to remedy any neglect without previous notice, and in either case deduct the cost of such remedy from money due the CONTRACTOR.

2.15 PERIODIC CLEAN UP; BASIC SITE RESTORATION

A. During construction, the CONTRACTOR shall regularly remove from the site of the work all accumulated debris and surplus materials of any kind which result from his operations. Unused equipment and tools shall be stored at the CONTRACTOR's yard or base of operations for the project.

B. When the work involves installation of sewers, drains, water mains, manholes, underground structures, or other disturbance of existing features in or across streets, rights-of-way, easements, or private property, the CONTRACTOR shall (as the work progresses) promptly

backfill, compact, grade, and otherwise restore the disturbed area to the basic condition which will permit resumption of pedestrian or vehicular traffic and any other critical activity or functions consistent with the original use of the land. All work within 500 feet of the forward progress shall be complete with the exception of testing. The CONTRACTORs forward progress is subject to being suspended if in the opinion of the ENGINEER the above requirement is not met. The requirements for temporary paving of streets, walks, and driveways are specified elsewhere. Unsightly mounds of earth, large stones, boulders, and debris shall be removed so that the site presents a neat appearance.

C. The CONTRACTOR shall perform the clean-up work on a regular basis and as frequently as ordered by the ENGINEER. Basic site restoration in a particular area shall be accomplished immediately following the installation or completion of the required facilities in that area. Furthermore such work shall also be accomplished, when ordered by the ENGINEER, if partially completed facilities must remain incomplete for some time period due to unforeseen circumstances.

D. Upon failure of the CONTRACTOR to perform periodic clean-up and basic restoration of the site to the ENGINEER's satisfaction, the OWNER may, upon five (5) days prior written notice to the CONTRACTOR, without prejudice to any other rights or remedies of the OWNER, cause such work for which the CONTRACTOR is responsible to be accomplished to the extent deemed necessary by the ENGINEER, and all costs resulting there-from shall be charged to the CONTRACTOR and deducted from the amounts of money that may be due him. The CONTRACTOR shall receive no consideration for time extension or compensation for production time lost while not in compliance with the requirements for clean up.

PART 3 - EXECUTION

3.1 GENERAL

A. Maintain all temporary facilities until the project has reached Substantial Completion and is accepted by the OWNER. Project sign(s) shall be maintained until Final Acceptance by the OWNER.

B. Provide sheds and covered spaces suitable for storage of materials and equipment requiring protection as approved by the ENGINEER.

C. Erect and maintain scaffolding, ramps, platforms, guards, rails, stairs, and ladders as necessary for this work to meet all applicable safety laws and ordinances.

D. Maintain safety lights, signage, and other safety provisions. Keep safety lights burning from dark to dusk.

E. Install lifting and hoisting equipment to meet all applicable safety requirements.

F. Maintain adequate toilet facilities and keep toilets in clean and sanitary condition.

G. Make arrangements and install temporary water, electric, and telephone service required for the project.

H. Maintain temporary heating system during cold weather to adequately protect the work in place or work being placed. Specific requirements for environmental conditions can be found in the technical sections of the Specifications.

I. Pump or drain water to keep work and storage area free from water which could interfere with the work, or could cause damage. Distribute discharge to prevent erosion.

J. Remove all temporary work at the completion of the project, unless directed otherwise by the ENGINEER.

K. Clean spaces that were occupied by temporary work. Periodically, and as directed by the ENGINEER, remove all debris and rubbish from the site.

3.2 PAYMENT

A. Work specified under this Section shall be included for payment in the CONTRACTOR's bid price for other Pay Items of this Contract. No specific payment will be made under this Section.

END OF SECTION

SECTION 01730
OPERATING AND MAINTENANCE DATA

PART 1- GENERAL

1.1 REQUIREMENTS

A. Operation and Maintenance manuals are required for all materials and equipment provided and installed in the project.

B. Prior to substantial completion, submit to ENGINEER for review and approval, six (6) copies of a loose-leaf type manual properly indexed and bound in hard back, three-ring D-binder(s) and one (1) PDF digital version that contains complete operation and maintenance instructions including but not limited to the following:

1. Nameplate data, model numbers and serial numbers for all equipment and motors. This information shall be summarized in the front of the Manual for all of the equipment in the manual. This information shall be tabbed and included in the table of contents.

2. The three ring binder shall be provided with cover and spline inserts for equipment identification. The cover and spline identification inserts shall at minimum include equipment name, manufacturer name, project name, ENGINEER, OWNER, specification section and any additional pertinent information.

3. Names, phone numbers and company address of local representatives for all of the equipment included in the Manual. This information shall be summarized in the front of the Manual for all of the equipment in the manual. This information shall be tabbed and included in the table of contents.

4. Equipment warranties;

5. Operating and maintenance data;

6. Troubleshooting information and procedures;

7. Lubrication information and schedules;

8. Preventative Maintenance information and schedules;

9. Wiring diagrams;

10. Assembly drawings with part numbers;

11. Approved shop drawings, plan elevation and section drawings showing all details as equipment has been installed.

12. All appurtenances provided with equipment including pipe, valves, fittings, supports and brackets;

13. All electrical components, control panels, switches, floats, electronic components, relays, sensors, starters, contactors and enclosures
14. Names, telephone numbers, and addresses of applicable subcontractors, equipment and service suppliers and manufacturers;

15. Adequate information to satisfy State regulatory agency requirements; and,

16. Any other information concerning operation or maintenance of equipment readily available to CONTRACTOR and as required to repair and order parts.

C. At a minimum, operating and maintenance data shall be supplied for the following equipment:

1. Control Systems (including dialer, etc.);
2. Process equipment and devices
3. Pumps;
4. Electrical Devices
5. Generator Set (including transfer switch);
6. Control Valves (check, pressure reducing/sustaining, etc.);
7. Pipe valves and fittings;
8. Instrumentation
9. SCADA systems
10. Flow measuring devices;
11. Pressure measuring devices;
12. Sensors
13. Unit Heaters;
14. Lighting
15. Air Handling Equipment
16. Electrical switch gear

PART 2- PRODUCTS Not USED

PART 3- EXECUTION

3.1 Information included in the O & M Manual shall be specific to the equipment or item installed. Data sheets that include information not pertinent to the specific equipment or product should be omitted. Where data sheets have multiple information all non pertinent information shall be edited out and pertinent information shall be highlighted to make it clear which information applies.

3.2 Drawings shall be provided which clearly indicate the item and the installation. These should include plan views, elevation views and section views as required. Drawings should be scaled and dimensioned. Drawings from the approved submittals should be included and corrected if required to indicate the "as-built" condition.

3.3 Information shall include serial numbers, order numbers, dates, contact information or other pertinent information that are required to trace a piece of equipment back to the manufacturer.

END OF SECTION

SECTION 01770
CLOSEOUT PROCEDURES

PART 1- GENERAL

1.1 SUMMARY

A. This Section provides for the orderly and efficient transfer of the WORK from the CONTRACTOR to OWNER.

1.2 RELATED SECTIONS

A. The provisions and intent of the AGREEMENT, including the General Conditions, Supplementary Conditions, and other requirements of the Contract Documents apply to the WORK as specified in this Section. WORK related to this Section is described throughout the Specifications.

1.3 SUBMITTALS

A. Guarantees/Warranties: Four (4) copies of all guarantees, warranties and bonds called for in these Specifications commencing on the date of Substantial Completion.

B. Governmental Compliance: Provide evidence of compliance with requirements of governmental agencies having jurisdiction, but not necessarily limited to:

1. Certificates of Inspection
2. Certificates of Occupancy
3. Certificate to Operate

C. Affidavit of Payment of Claims: Provide evidence of payment and release of liens.

D. Affidavit of Release of Liens

E. Consent of Surety for Final Payment.

F. Contractor's Certification of Completion.

G. Final Pay Application

H. List of Project Participants: Provide a list of subcontractors, service organizations, and principal vendors, including names, addresses, and telephone numbers where they can be reached for emergency service at all times including nights, weekends, and holidays.

1.4 WARRANTEES AND GUARANTEES

A. Contractor shall provide Warrantees and Guarantees on all materials, equipment, workmanship, installations, labor and operation items provided and /or installed by the Contractor or any of its subcontractors and /or suppliers.

B. Warrantees and Guarantees shall be for a period of one year after:

1. Being placed in service by owner for the owners use before substantial completion of the project.

2. Date of substantial completion of the project.

3. Being installed and put in service after substantial completion of the project.

4. Equipment installed does not constitute being "in service".

C. Guarantee: CONTRACTOR warrants the equipment and/or materials delivered and installed under the AGREEMENT are free from defects in design, material or workmanship, and against damage caused prior to final inspection.

D. Prompt Repair: CONTRACTOR shall promptly repair or replace all defective or damaged items delivered under the AGREEMENT. CONTRACTOR may elect to have any replaced item returned to its plant at its sole expense.

E. Owner's Option: In the event of equipment and/or materials failure, during such time or in such a location that immediate repairs are mandatory, CONTRACTOR shall respond promptly, regardless of time. If CONTRACTOR is not available, OWNER personnel or other contractors, secured by OWNER, will affect repairs. CONTRACTOR shall then reimburse OWNER for parts and labor and/or other contractors costs necessary to correct deficiencies as defined within the warranty clause and time.

F. This specification shall apply to all sections of the specifications as applicable whether mentioned in a specific specification or not. Should the specific specification section have additional requirements or more stringent requirements that this section the more stringent shall apply.

G. The warranty shall not cover any item that has been subjected to external damage, disassembled and/or repaired by unauthorized persons, flooded or otherwise mistreated. Items normally consumed in service such as grease, oil, v-belts, fuses, filters, seals, etc., shall not be warranted.

PART 2- PRODUCTS

2.1 SUBSTANTIAL COMPLETION

A. Record Drawings: The CONTRACTOR shall maintain an accurate set of Record Drawings and Specifications. Prior to Substantial Completion CONTRACTOR shall prepare marked prints showing the installed locations and sizes of all underground or concealed portions of the WORK that are different from those shown in the Contract Documents. These Drawings shall be based on the set kept at the Project site and shall also show any other changes made to the Project during construction. These Drawings shall be submitted to ENGINEER at completion of the WORK.

Record drawing information shall include the following as a minimum, where applicable:

1. Size, horizontal and vertical location of any existing utilities uncovered during the course of the work. This shall include telephone cables and conduits, fiber-

optic cables and conduits, television cables, electrical cables and conduits, gas lines, water lines, sewer force mains, sanitary sewers, storm sewers, and the like.

2. Horizontal and vertical location of all water lines, sewer mains and force mains installed at every 100 foot station.

3. Location of all cleanouts new and existing, size of service lines installed, and the like.

4. Northing and Easting of all surface fixtures, i.e. valve boxes, manholes, etc.

5. Location of lines plugged or capped.

6. Swing ties to all structures installed such as manholes, air vents, hydrants, valve boxes, blowoffs, cleanouts, and the like.

7. Depth from rim of valve box to top of operating nut on all valves, and length of valve extensions installed.

8. Sizes and types of materials used and changes in sizes and types of materials. Rims and inverts of all manholes installed or tied into shall be provided.

9. Location of all sleeves, bends, and other fittings including method of restraint used; for example, thrust block, retainer glands, tie rods, and the like.

10. The Record Documents are a specific contract requirement of the Contractor. Final payment will not be issued until said documents have been submitted to the Engineer in an acceptable form.

B. Owner's Manuals: Not Applicable.

2.2 WARRANTIES

A. Four (4) copies of all warranties shall be submitted prior to substantial completion.

2.3 TRAINING

A. CONTACTOR shall provide a written schedule of all training that will be provided to the OWNER to be reviewed and approved, a minimum of 1 month before the first scheduled training session.

B. Training shall consist of, at a minimum, the level of training as recommended by the manufacturers of the equipment to be installed.

C. CONTRACTOR shall give the OWNER at least 2 weeks advance notice of each anticipated training session to allow for proper personnel to be present at the training.

D. The OWNER reserves the right to request specific training on equipment as he deems necessary for the successful transfer of ownership of the equipment from the CONTRACTOR to the OWNER.

E. All training shall be completed prior to issuance of Substantial Completion.

PART 3- EXECUTION

3.1 SUBSTANTIAL COMPLETION PROCEDURES

A. Owner's Use: The following procedures are to be applied towards OWNER'S utilizing the Project:

1. Initial Punch List: Within a reasonable time after receipt from CONTRACTOR of a comprehensive list of items which need to be completed or corrected, the ENGINEER will determine status of completion.

2. Incomplete Work: Should ENGINEER determine that the WORK is not substantially complete:

a. Notification: ENGINEER will promptly so notify CONTRACTOR, in writing, given the reasons therefore. Contractor Remedy: CONTRACTOR shall promptly remedy the deficiencies and notify ENGINEER when ready for inspection.

b. Additional Cost: The cost of re-inspection for Substantial Completion will be borne by CONTRACTOR.

3. Completed Work: When ENGINEER concurs that the WORK is substantially complete:

a. Engineer's Acceptance: ENGINEER will submit the Certificate to OWNER and to CONTRACTOR for their written acceptance of the responsibilities assigned to them in the Certificate.

4. Occupancy: Upon Substantial Completion, CONTRACTOR shall obtain a temporary Certificate of Occupancy or other permission from the inspecting authority for OWNER to begin moving in its equipment and furnishings.

3.2 INSTRUCTIONS TO OWNER

A. Operation and Maintenance: CONTRACTOR shall instruct OWNER or its authorized representative in the proper operation and maintenance of all elements of the Project systems as specified.

3.3 CLEAN-UP/RESTORATION

A. Definition: Except as otherwise specifically provided, "clean" (for the purpose of this Section) shall be interpreted as meaning the level of cleanliness generally provided by VDOT roadway construction projects.

B. General: Prior to completion of the WORK, remove from the job site all tools, surplus materials, equipment, scrap, debris, and waste. Conduct final progress cleaning as described above. Restore all disturbed areas to a condition equal to or better than that prior to construction.

C. Site: Unless otherwise specifically directed by ENGINEER, hose down all paved areas on the site. Completely remove all resultant debris.

D. Structure: Not Applicable.

E. Timing: Schedule final cleaning as approved by ENGINEER, to enable OWNER to receive a completely clean Project.

3.4 FINAL COMPLETION

A. Notification: Prepare and submit to ENGINEER a written notice that the Project is complete and ready for final inspection and acceptance.

B. Releases/Consent of Surety: Contractor shall forward a completed "Release of Liens", "Release and Waiver of Debts and Claims" and "Consent of Surety" to ENGINEER prior to Final Payment.

C. Verification: CONTRACTOR shall provide written documentation that the CONTRACTOR has verified that all work has been completed prior to notifying the ENGINEER of such. ENGINEER shall verify that Work is complete prior to Final Payment.

D. Certification: CONTRACTOR shall certify that:

1. Review: Contract Documents have been reviewed

2. Inspection: WORK has been inspected for compliance with the Contract Documents.

3. Completeness: WORK has been completed in accordance with the Contract Documents.

4. Testing: Equipment and systems have been tested as required, and are operational.

5. Final Inspection: WORK is completed and ready for final inspection.

E. Incomplete Determination: Should ENGINEER determine that the WORK is incomplete or defective:

1. Notification: ENGINEER will promptly so notify CONTRACTOR, in writing, listing the incomplete or defective WORK.

2. Contractor Remedy: CONTRACTOR shall remedy the deficiencies promptly, and notify ENGINEER when ready for inspection.

3. Additional Cost: The cost of re-inspection for Final Completion will be borne by CONTRACTOR.

F. Acceptance: When ENGINEER determines that the WORK is acceptable under the Contract Documents, it will request the final Application for Payment from CONTRACTOR.

G. Reimbursement: CONTRACTOR shall reimburse OWNER for all trips to the Project site by ENGINEER after Substantial Completion in excess of two (2) trips if such excess trips are necessitated due to the Project's remaining incomplete.

H. Retainage: Retainage will be released per the provisions of the Contract Documents.

3.5 FINAL PAYMENT

A. Application: Submit a final Application for Payment to ENGINEER, showing all adjustments to the agreed to sum.

B. Change Order: If so required, ENGINEER will prepare a final Change Order showing adjustments to the AGREEMENT which were not made previously by Change Orders.

END OF SECTION 01770

SECTION 02100
SITE PREPARATION

PART 1- GENERAL

1.1 SCOPE

A. The CONTRACTOR shall be responsible for preparation of the site for construction of the project in accordance with the Contract Documents and as specified herein.

PART 2- PRODUCTS

Not Applicable

PART 3- EXECUTION

3.1 STAKING AND LAYOUT OF WORK

A. The CONTRACTOR shall locate bench marks, monuments, base lines, reference lines, and other reference points for the staking and layout of the WORK. Locations of bench marks, base line control points, and other reference points which were established during design of the project by the ENGINEER will be made available to the CONTRACTOR one time only upon request without charge. The CONTRACTOR shall complete the layout of the WORK and shall be responsible for all measurements that may be required for the execution of the WORK, to the location and limits that may be required for the execution of the WORK, to the location and limit marks prescribed in the Contract Documents, subject to such modifications as the ENGINEER may require to meet changed conditions in the contract WORK. All WORK under this contract shall be done to the lines and grades shown on the Contract Drawings.

B. The CONTRACTOR shall furnish competent men, tools, stakes, and other material as required, without charge, for properly staking out the WORK. He shall furnish the ENGINEER with one (1) copy of all field notes of such surveys. Final "cut" sheets/grade sheet shall be provided to the ENGINEER and OWNER. All staking and layout shall be performed under the supervision of a surveyor licensed in the Commonwealth of Virginia.

C. It shall be the duty of the CONTRACTOR and his employees to call to the attention of the ENGINEER any reference lines or points, or any bench marks which may have been disturbed or which seem to be off line or grade.

D. Where called for in the Contract Documents or required for accuracy and fit with existing WORK, the CONTRACTOR will make his own field measurements to verify any dimensions shown on the Contract Drawings.

3.2 PROTECTION OF EXISTING PROPERTY IRONS AND MONUMENTS

A. The CONTRACTOR shall use care in protecting existing property irons and monuments adjacent to his working area. If a property iron or monument must be removed to install new

facilities, the CONTRACTOR shall be responsible for locating the iron or monument in such a manner that it can be accurately replaced after construction of the new facilities by a properly registered surveyor. If a property iron or monument is destroyed because of neglect on the part of the CONTRACTOR, it shall be replaced at his expense by a properly registered surveyor.

3.3 RIGHT-OF-WAYS AND LIMITS OF CONSTRUCTION

A. The CONTRACTOR shall confine his construction operations to the immediate vicinity of the location shown on the Contract Drawings and in no case shall he encroach beyond the limits of the OWNER'S property, easements, or rights-of-way. He shall place materials, equipment, supplies, etc. so as to cause the least possible damage to property and interference with traffic. His method of operation and placing of equipment and materials shall be subject to the review of the ENGINEER.

B. It shall be the duty of the CONTRACTOR to locate the limits of the rights-of-way, easements, and/or property lines, prior to beginning construction. He shall be solely responsible for damage to trees, crops or other property outside the boundaries of the rights-of-way and easements and shall make satisfactory settlement for any damage directly with the property OWNER involved.

C. Where timber is located within the limits of construction and inside the easements on the property or rights-of-way, the CONTRACTOR shall preserve and protect from damage all trees that do not directly interfere with the prosecution of the WORK. The CONTRACTOR shall not cut any tree greater in diameter than six (6) inches and located more than eight (8) feet from the centerline of ditch or structure without first consulting the ENGINEER.

D. Where shrubbery or grass is located on the construction rights-of-way and easements, the CONTRACTOR shall be fully responsible for any damage thereto. He shall remove, protect and replant all shrubbery to the full satisfaction of the ENGINEER, OWNER, and property OWNER and shall either remove and resod or replant all lawns or pasture grass damaged by the construction WORK. Topsoil shall be replaced and grass of the same type found shall be planted, fertilized, mulched and watered in accordance with the Specifications, until a satisfactory stand of grass is secured. Unless otherwise notified, all timber located on rights-of-way and easements is the property of the land OWNER, and the land OWNER must be given a reasonable amount of notice and time by the CONTRACTOR to remove any timber. Prior to removing any timber the land OWNER and the OWNER must be notified by the CONTRACTOR.

E. Construction Rights-of-Way shall be defined as the designated property, easements, and public rights-of-way which comprise the work area for the project.

F. Excavation, grading, fill, storm drainage, paving and any other construction or installations in rights-of-ways of streets, highways, public carrier lines, utility lines (either aerial, surface or subsurface), etc., shall be done in accordance with requirements of the authorities having jurisdiction and of applicable requirements of these Specifications. CONTRACTOR shall make all necessary arrangements with the proper authorities, including the obtaining of permits, approval of construction methods, etc., and shall pay all costs charged in connection with the WORK.

3.4 PROTECTION OF PROPERTY AND EXISTING UTILITIES AND STRUCTURES

A. CONTRACTOR shall be responsible for the preservation and protection of property adjacent to the WORK site against damage or injury as a result of his operations under this WORK. Any damage or injury occurring on account of any act, omission or neglect on the part of the CONTRACTOR shall be restored in a proper and satisfactory manner as determined by the ENGINEER and OWNER or replaced by and at the expense of the CONTRACTOR.

B. CONTRACTOR shall comply promptly with such safety regulations as may be prescribed by the ENGINEER, OWNER or the local, state and federal authorities having jurisdiction and shall when so directed, properly correct any unsafe conditions created by, or unsafe practices on the part of his employees. In the event of the CONTRACTOR's failure to comply, the ENGINEER or OWNER may take the necessary measures to correct the conditions or practices complained of, and all costs thereof will be deducted from any monies due the CONTRACTOR. Failure of the ENGINEER to direct the correction of unsafe conditions or practices shall not relieve the CONTRACTOR of his responsibility hereunder.

C. In the event of any claims for damage or alleged damage to property as a result of WORK under this WORK, the CONTRACTOR shall be responsible for all costs in connection with the settlement of or defense against such claims.

D. Where existing utilities and structures are indicated on the Drawings, it shall be understood that all of the existing utilities and structures affecting the WORK may not be shown and that the locations of those shown are approximate only. It shall be the responsibility of the CONTRACTOR to ascertain the actual extent and exact location of existing utilities and structures. In every instance the CONTRACTOR shall notify the proper authority having jurisdiction and obtain all necessary directions and approvals before performing any WORK in the vicinity of existing utilities.

E. The WORK shall be carried out in a manner to prevent disruption of existing services and to avoid damage to the existing utilities. Temporary connections shall be provided, as required, to ensure uninterruption of existing services. Any damage resulting from Construction of this WORK shall be repaired within 24 hours. The CONTRACTOR shall make these repairs at his own expense in a manner approved by the ENGINEER, and further, subject to the requirements of any authority having jurisdiction, that they perform their own repairs or have them done by others, the CONTRACTOR shall be responsible for all costs thereof.

F. Where excavations by the CONTRACTOR require any utility lines or appurtenant structure to be temporarily supported and otherwise protected during the construction WORK, such support and protection shall be provided by the CONTRACTOR. All such WORK shall be performed in a manner satisfactory to the ENGINEER and the respective authority having jurisdiction over such WORK. In the event the CONTRACTOR fails to provide proper support or protection to any existing utility, the ENGINEER may, at his direction, have the respective authority provide such support or protection as may be necessary to insure the safety of such utility, and the costs of such measures shall be paid by the CONTRACTOR.

3.5 OBSTRUCTIONS

A. The CONTRACTOR shall be responsible for removing and disposing of any obstructions or obstacles at the site of the WORK or along the right-of-way therefore, to the satisfaction of the ENGINEER. Minor obstruction shall be removed and properly disposed of or protected and re-erected to as good condition as found, at the same or adjacent locations, as directed by the ENGINEER.

3.6 FENCES

A. Fences at the site or along rights-of-way, which interfere with the construction operations, shall be maintained by the CONTRACTOR until completion of the WORK unless written permission is obtained from the OWNER thereof to leave the fence dismantled until construction is completed. He shall remove, rebuild and extend fences as necessary.

3.7 DEMOLITION

A. Demolition shall be as specified in Division 2.

END OF SECTION

SECTION 02110
CLEARING AND GRUBBING

PART 1 - GENERAL

1.1 SUMMARY

The CONTRACTOR shall be responsible for preparation of the site for construction of the project in accordance with the Contract Documents and as specified herein.

This section includes the following:

A. Protection of existing trees.
B. Removal of trees and other vegetation in the project area.
C. Clearing and grubbing.

1.2 RELATED SECTIONS

Intent: The provisions and intent of the AGREEMENT, including the General Conditions, Supplementary Conditions, and other requirements of the Contract Documents apply to the WORK as specified in this Section. WORK related to this Section is described throughout the Specifications.

1.3 REFERENCES

Virginia "Erosion and Sediment Control Handbook", latest edition.

1.4 SUBMITTALS

A. Submittals shall be in accordance with Division 1.

B. Off-Site Borrow Areas: If applicable, provide written assurance to ENGINEER that CONTRACTOR has the right to excavate and remove off-site borrow materials for use at the site.

C. Erosion and Sediment Control: Submit and maintain on-site a copy of Erosion and Sediment Control permit issued by the local approving authority for both on-site and off-site operations. These permits are to be obtained by the CONTRACTOR.

1.5 DELIVERY, STORAGE AND HANDLING

Deliver materials to, store at the site, and handle in a manner which will maintain the materials in their original manufactured or fabricated condition until ready for use.

PART 2 - PRODUCTS

Not Applicable.

PART 3 - EXECUTION

3.1 TRAFFIC

Conduct site clearing operations to ensure minimum interference with roads, streets, walks, businesses, and other adjacent occupied or used facilities. Do not close or obstruct streets, walks or other occupied or used facilities without prior permission from ENGINEER, OWNER, DPW, VDOT, private business and/or property owners on which WORK is conducted, and/or authorities having jurisdiction.

3.2 PROTECTION

A. General: Provide temporary fences, barricades, coverings, or other protection to preserve existing items indicated to remain and to prevent injury or damage to persons or property. Provide protection for adjacent properties as required.

B. Existing Trees/Vegetation: Protect existing trees and other vegetation adjacent to the actual WORK area from physical damage by providing temporary guards as follows:

1.At a minimum, the limits of clearing shall be located outside the drip line of any tree to be retained and, in no case closer than 5 feet to the trunk of any tree.

2.Marking: Prior to construction and before the preconstruction conference, individual trees and stands of trees to be retained within the limits of clearing shall be marked at a height visible to equipment operators.

3.Equipment Operation and Storage: Heavy equipment, vehicular traffic, or stockpiles of any construction materials (including topsoil) shall not be permitted within the drip line of any tree to be retained. Trees being removed shall not be felled, pushed or pulled into trees being retained. Equipment operators shall not clean any part of their equipment by slamming it against the trunks of trees to be retained.

4.Storage and Disposal of Toxic Materials: No toxic materials shall be stored closer than 100 feet to the drip line of any trees to be retained. Paint, acid, nails, gypsum board, wire, chemicals, fuels, and lubricants shall not be disposed of in such a way as to injure vegetation.

5.Fencing and Armoring: Any device may be used which will effectively protect the roots, trunk and tops of trees retained on the site. However, trees to be retained within 40 feet of a proposed building or excavation shall be protected by fencing. Personnel must be instructed to honor protective devices. The devices described are suggested only, and are not intended to exclude the use of other devices which will protect the trees to be retained.

a.Snow Fence - Standard 40-inch high snow fence shall be placed at the limits of clearing on standard steel posts set 6 feet apart.

b.Board Fence - Board fencing consisting of 4-inch square posts set securely in the ground and protruding at least 4 feet above the ground shall be placed at the limits of clearing with a minimum of two horizontal boards between

posts. If it is not practical to erect a fence at the drip line, construct a triangular fence nearer the trunk. The limits of clearing will still be located at the drip line, since the root zone within the drip line will still require protection.

c.Cord Fence - Posts with a minimum size of 2 inches square or 2 inches in diameter set securely in the ground and protruding at least 4 feet above the ground shall be placed at the limits of clearing with two rows of cord 1/4-inch or thicker at least 2 feet apart running between posts with strips of colored surveyor's flagging tied securely to the string at intervals no greater than 3 feet.

d. Plastic Fencing - 40-inch high "international orange" plastic (polyethylene) web fencing secured to conventional metal "T' or "U" posts driven to a minimum depth of 18 inches on 6-foot minimum centers shall be installed at the limits of clearing. The fence should have the following minimum physical qualities:

Tensile yield:	Average 2,000 lbs. per 4-foot width (ASTM D638)
Ultimate tensile yield:	Average 2,900 lbs. per 4-foot width (ASTM D638)
Elongation at break (%):	Greater than 1000% (ASTM D638)
Chemical resistance:	Inert to most chemicals and acids

e. Additional Trees - Additional trees may be left standing as protection between the trunks of the trees to be retained and the limits of clearing. However, in order for this alternative to be used, the trunks of the trees in the buffer must be no more than 6 feet apart to prevent passage of equipment and material through the buffer. These additional trees shall be reexamined prior to the completion of construction and either be given sufficient treatment to ensure survival or be removed.

f. Trunk Armoring - As a last resort, a tree trunk can be armored with burlap wrapping and 2-inch studs wired vertically no more than 2 inches apart to a height of 5 feet encircling the trunk. If this alternative is used, the root zone within the drip line will still require protection. Nothing should ever be nailed to a tree.

g. Fencing and armoring devices shall be in place before any excavation or grading is begun, shall be kept in good repair for the duration of construction activities, and shall be the last items removed during the final cleanup after the completion of the project.

C. Roads and Walks: Keep roads and walks free of dirt and debris at all times.

D. Utility Lines: Protect existing utility lines from damage. Notify ENGINEER immediately of damage to or an encounter with unknown existing utility lines. CONTRACTOR shall be responsible for the repairs of damage to existing utility lines that are indicated or made known to CONTRACTOR prior to start of clearing and grubbing operations. When utility lines which are to be removed are encountered within the area of operations, CONTRACTOR shall notify ENGINEER and OWNER and Utility Owner in ample time to minimize interruption of the

service.

3.3 RESTORATION & REPAIR

A. General: Restore damaged items to condition existing prior to start of WORK.

B. Existing Trees/Vegetation: In spite of precautions, some damage to protected trees may occur. In such cases, the following maintenance guidelines should be followed:

1.Soil Aeration - If the soil has become compacted over the root zone of any tree, the ground shall be aerated by punching holes with an iron bar. The bar shall be driven 1-foot deep and then moved back and forth until the soil is loosened. This procedure shall be repeated every 18 inches until all of the compacted soil beneath the crown of the tree has been loosened.

2.Repair of Damage: Any damage to the crown, trunk, or root system of any tree retained on the site shall be repaired immediately.

a.Whenever major root or bark damage occurs, remove some foliage to reduce the demand for water and nutrients.

b.Damaged roots shall immediately be cut off cleanly inside the exposed or damaged area. Cut surfaces shall be painted with approved tree paint, and moist peat moss, burlap, or top-soil shall be spread over the exposed area.

c.To treat bark damage, carefully cut away all loosened bark back into the undamaged area, taper the cut at the top and bottom, and provide drainage at the base of the wound.

d.All tree limbs damaged during construction or removed for any other reason shall be cut off above the collar at the preceding branch junction.

e.Care for serious injuries shall be prescribed by a forester or a tree specialist at CONTRACTOR's expense.

3.Fertilization: Broadleaf trees that have been stressed or damaged shall receive a heavy application of fertilizer to aid their recovery.

a.Trees shall be fertilized in the late fall (after October 1) or the early spring (from the time frost is out of the ground until May 1). Fall applications are preferred, as the nutrients will be made available over a longer period of time.

b.Fertilizer shall be applied to the soil over the feeder roots (see Plate 3.38-9). In no case should it be applied closer than 3 feet to the trunk. The root system of conifers extends some distance beyond the drip line. Increase the area to be fertilized by one fourth the area of the crown.

c.Fertilizer shall be applied using approved fertilization methods and equipment.

d.Formulations and application rates shall conform to the guidelines given in the following table:

Tree Type	Special Conditions	Application Rate & Method		Formulation
Broad-Leaf	Greater than 6 inches dbh*	Normal	2-4 lbs. per inch dbh;	Commercial

Deciduous	except American Beeches and Crabapples		broadcast	10-8-6 or 10-6-4
		Grade Change	4-5 lbs. per inch dbh; broadcast	Commercial 10-6-4
	Smaller than 6 inches dbh, including all American Beeches and Crabapples	Normal	1-2 lbs. per inch dbh; broadcast	Commercial 10-8-6 or 10-6-4
		Grade Change	2-3 lbs. per inch dbh; broadcast	Commercial 10-6-4
Narrow-Leaf Evergreen	Greater than 6 inches dbh, located in groups	2-4 lbs. per 100 sf of bed area; broadcast		Commercial 10-6-4
	Greater than 6 inches dbh, single specimens in open area	2 lbs. per inch dbh; broadcast		Commercial 10-6-4
	Smaller than 6 inches dbh	5 lbs. per 100 sf of bed area; incorporated into soil		Tankage or Cottonseed Meal
Broad-Leaf Evergreen	Where nitrogen in soil is sufficient	Liberal quantities incorporated into soil and applied as mulch		Acid Peat Moss or Rotted Oak Leaf Mold
	Where additional nitrogen is necessary	Also add 5 lbs. per 100 sf of bed area incorporated into soil		Tankage or Cottonseed Meal
*dbh: Diameter at breast height (4.5 feet above ground level).				

e.Maintain a ground cover of organic mulch around trees that is adequate to prevent erosion, protect roots, and hold water.

3.4 EROSION/SEDIMENT CONTROL FOR OFFSITE BORROW AREAS

Provide appropriate erosion and sediment control measures for any off-site borrow areas in full compliance with the Virginia Erosion and Sediment Control Handbook and regulations of the local jurisdiction. CONTRACTOR shall be solely responsible for all borrow sites outside of the Project area.

3.5 CLEARING

Clearing shall consist of the felling, trimming, and cutting of trees into sections and the satisfactory disposal of the trees and other vegetation designated for removal, including downed timber, snags, brush, and rubbish occurring within the areas to be cleared. Cut off flush with or below the original ground surface trees, stumps, roots, brush, and other vegetation in areas to be cleared, except for trees and vegetation indicated or directed to be left standing.

3.6 TREE REMOVAL

Where indicated, remove designated trees and stumps and grub roots. A tree trimming permit shall be obtained from VDOT by CONTRACTOR to remove/trim any trees located within the VDOT right-of-way.

3.7 GRUBBING

Remove and dispose of roots larger than 3 inches in diameter, matted roots, and stumps from the indicated grubbing areas. Excavate this material together with logs, organic and metallic debris, brush, and refuse and remove to a depth of not less than 18 inches below the original soil surface in areas indicated to be grubbed and in areas indicated as construction areas for this Project. Fill depressions

made by grubbing with suitable material and compact in accordance with the requirements of the Contract Documents to make the new surface conform with the existing adjacent surface of the ground.

3.8 DISPOSAL OF CLEARED AND GRUBBED MATERIALS

A. CONTRACTOR shall make available all Saleable Timber to the property owner of the area that was cleared and grubbed. Property owner shall have thirty (30) days to claim material. After thirty (30) days, CONTRACTOR shall be responsible for the disposal of said material.

B. Nonsalable Materials: Disposal shall be CONTRACTOR's responsibility.

3.9 STORING MATERIALS

Strip and stockpile topsoiling material and other cleared materials that will be reused in the WORK.

3.10 EXISTING IMPROVEMENTS/FACILITIES

Remove existing improvements, both above-grade and below-grade to extent indicated or as otherwise required to permit new construction and provide for proper disposal off-site. Existing improvements and facilities such as mailboxes, signs, ornamental or decorative items, etc. that require temporary removal to permit new construction shall be promptly replaced and/or restored to the location and condition prior to construction. Improvements and facilities that are damaged by the CONTRACTOR during the course of construction shall be promptly replaced at the CONTRACTOR'S expense.

3.11 SALVABLE ITEMS

If applicable, carefully remove items indicated to be salvaged, and store on OWNER's premises where indicated or directed.

3.12 FUGITIVE DUST

Control air pollution caused by dust and dirt; comply with governing regulations. Provide a water truck as required.

3.13 FILLING

Fill depressions and voids resulting from site clearing operations. Using satisfactory soil materials, place in maximum 6 inches deep horizontal layers and compact each layer to density of surrounding original ground.

3.14 GRADING

Grade ground surface to conform to required contours and to provide positive surface drainage away from the WORK or borrow area.

3.15 DISPOSAL

Dispose of waste materials, including trash and debris, and excess topsoil, off-site at the CONTRACTOR'S expense.

3.16 BURNING

Burning of waste material on-site is prohibited for this project.

END OF SECTION

SECTION 02120
EROSION AND SEDIMENT CONTROL

PART 1- GENERAL

1.1 SUMMARY

A. This work shall be performed in accordance with the erosion and sediment control plan of the Construction Drawings and the details provided therein, and as described, detailed and required by the Virginia Erosion and Sediment Control Handbook, latest edition, and land disturbance permit. The land disturbance permit shall be obtained by the CONTRACTOR from Fluvanna County

The CONTRACTOR shall be responsible for providing an employee who will serve as the Responsible Land Disturber for the project. This person will be responsible for the erosion and sediment control plan and requirements for the project and shall be certified by the Virginia Department of Conservation and Recreation as a Responsible Land Disturber (RLD). The name of the CONTRACTOR's RLD and copy of his current certification shall be provided to the OWNER, ENGINEER, and Erosion and Sediment Control Plan Approving Authority.

B. The erosion and sediment control measures and devices shown on the Drawings and described herein have been reviewed and approved by the appropriate governing State and/or Local agencies. The CONTRACTOR is responsible for stabilizing all disturbed areas, fill slopes, borrow areas, etc. with whatever means necessary to ensure a dense, well vegetated ground cover. If the CONTRACTOR has not installed, repaired, or maintained these devices, or seeded disturbed areas at optimum dates, additional measures or devices may be required at no additional cost to the OWNER.

The CONTRACTOR's selected construction methods may require modifications to the erosion and sediment control measures shown on the Drawings. The CONTRACTOR is responsible for complying with the land disturbance permit and obtaining approval for any modifications to the approved Erosion and Sediment Control Plan.

1.2 RELATED SECTIONS

Intent: The provisions and intent of the AGREEMENT, including the General Conditions, Supplementary Conditions, and other requirements of the Contract Documents apply to the WORK as specified in this Section. WORK related to this Section is described throughout the Specifications.

1.3 REFERENCES

Virginia Erosion and Sediment Control Handbook

1.4 SUBMITTALS

A. Submittals shall be in accordance with Division 1.

B. Permanent Seed Mixture: Provide written notification as to the permanent seed mixture to be used.

C. Temporary Seed Mixture: Provide written notification as to the temporary seed mixture to be used.

D. Erosion and Sediment Control: Submit and maintain on-site a copy of the Erosion and Sediment Control permit issued by the local approving authority for both on-site and off-site operations.

E. Responsible Land Disturber: Copy of Certification to be submitted at the pre-construction meeting.

1.5 MAINTENANCE

A. Maintain all erosion and sediment control structures to be utilized during the life of the Project in compliance with the regulations of the Division of Soil and Water Conservation and the requirements of the County DPW until vegetative cover is acceptable to the Division's and DPW's field personnel and approval acceptance is received.

PART 2- PRODUCTS

2.1 PRODUCTS

A. All products shall comply with details shown on the Drawings and the requirements of the Virginia Erosion and Sediment Control Handbook, latest edition.

PART 3- EXECUTION

3.1 EROSION AND SEDIMENT CONTROL MEASURES

A. Sequencing: All WORK shall be performed to limit the area of disturbance necessary to install Erosion and Sediment control devices prior to conducting WORK.

B. Siltation and Erosion Control Measures: Inlet protection, slope protection, mat linings, ditch linings, diversion dikes, silt fence, construction entrances, temporary & permanent vegetation, sediment traps & ponds, diversion ditches and all other items for siltation and erosion control shall be constructed in the locations shown or designated on the plans in accordance with the details provided, or as directed by the ENGINEER or local E&S inspector.

1. The CONTRACTOR shall institute the erosion control program as part of clearing and grubbing, and prior to rough grading. The initial program shall include, but not be limited to, the installation of construction entrance, inlet protection, silt fence, as shown on the Drawings at the limits of clearing and grubbing where silt-carrying surface water runoff may be diverted and/or filtered prior to leaving the disturbed area.

2. All siltation and erosion control devices installed during the course of construction shall be maintained in proper working order at all times, and shall not be removed until final stabilization of all disturbed areas or at the direction of the ENGINEER or local regulating authority.

C. Temporary Seeding: All disturbed areas that have no construction activity in close proximity shall be temporarily seeded within 7 days of completion of the disturbing activities. Establish temporary cover for erosion control by seeding and/or mulching. This shall be accomplished as soon as rough grading work is done.

1. When construction schedule requires seeding outside of the appropriate seeding dates, temporary seeding shall be installed per the detailed seeding schedules on the Drawings. CONTRACTOR shall reseed at an appropriate time. All reseeding shall be at the CONTRACTOR's expense.

D. Steep Slopes: On all steep slopes, where erosion is probable, hydroseed areas as soon as possible in strict accordance with applicable provision, of Section 603, of the VDOT *Road and Bridge Specifications*. Maximum allowable slope to be seeded is 2:1.

E. Cleaning of Roads and Streets: The CONTRACTOR shall maintain a vehicle wash rack or gravel bed at all vehicle egress areas (construction entrance). All vehicles shall be thoroughly cleaned of mud and silt before leaving the construction site to avoid tracking mud and silt onto roads, streets, and highways. In the event that tracking does occur, the CONTRACTOR shall immediately clean the street or road of all debris, mud or silt and shall pay all damages resulting therefrom. A daily survey of the condition of the adjacent streets and roads shall be made and recorded in the field log.

F. Protection of Stormwater Systems: Stormwater structures which will receive runoff from the construction shall be protected from the buildup of mud or silt as detailed on the Drawings and shall be cleaned out as silt loading occurs and prior to end of construction.

G. Fines for Siltation and Erosion Control: Any fines that are assessed upon the CONTRACTOR or OWNER by the governing agency due to negligence of the CONTRACTOR shall be paid by the CONTRACTOR.

END OF SECTION

SECTION 02220
DEMOLITION

PART 1- GENERAL

1.1 SUMMARY

A. This Section includes but is not limited to the following:

1. Demolish and remove all structures, equipment, valves, piping, electrical equipment, conduit, wiring and all appurtenances as noted and as needed to facilitate construction of proposed work.

1.2 RELATED DOCUMENTS

A. Drawings and general provisions of the AGREEMENT, including General Conditions, Supplemental Conditions, and other requirements of the Contract Documents apply to the WORK as specified in this Section. WORK related to this Section is described throughout the Specifications.

1.3 DEFINITIONS

A. Remove: Detach items from existing construction and legally dispose of them off-site, unless indicated to be removed and salvaged or removed and reinstalled. Concrete structures shall be demolished 4 feet below grade, except where there is conflict and deeper removal is required, and weep holes shall be drilled through wall and floor. Provide fill material to existing or finished grade and grade surface to preclude ponding.

B. Existing to Remain: Existing items of construction that are not to be removed and that are not otherwise indicated to be removed, removed and salvaged, or removed and reinstalled.

C. Demolish: Demolished items shall be done away with completely and removed from the project site. Means and methods shall be at the discretion of the Contractor.

D. Salvage: Items to be salvaged shall be removed without destroying or causing damage to the item.

E. Abandoned: Items to be abandoned shall be left in place but taken out of service.

1.4 MATERIALS OWNERSHIP

A. Historic items, relics, and similar objects including, but not limited to, cornerstones and their contents, commemorative plaques and tablets, time capsule, and other items of interest or value to Owner that may be encountered during demolition remain Owner's property. Carefully remove and salvage each item or object in a manner to prevent damage and deliver promptly to Owner.

1. Other items of interest or value shall include but not be limited to:

a. Pipe, tubing, valves and fittings

b. All equipment
c. All electrical materials such as wire, conduit, panelboards, motor control centers, motors, starters, breakers, light fixtures, light poles, lamps etc.
d. All instrumentation
e. All miscellaneous metals such as handrails, supports, grating, ladders, stairs, hatches, beams, channels, angle iron etc.
f. All material handling equipment such as hoists, chain falls and, gantries.

2. Contractor shall base his bid on removing from the project site and disposing of all demolished and removed materials without any salvage value.

3. Contractor shall coordinate with Owner's Representative before demolition starts, to establish which items will be turned over to the Owner and special procedures for their removal and salvage.

4. Contractor shall deliver all salvaged items which the Owner wishes to keep to a location designated by the Owner's Representative.

5. Contractor shall remove all salvaged items to be turned over to the Owner in a clean condition. All items exposed to sewage or the sewage treatment process shall be disinfected with a 200 ppm chlorine solution and rinsed clean.

1.5 SUBMITTALS

A. Submittals shall be in accordance with Division 1.

B. Qualification Data for demolition firm.

C. Schedule of Demolition Activities: Indicate the following:

1. Detailed sequence of demolition and removal work, with starting and ending dates for each activity.
2. Coordination for shutoff, capping, and continuation of utility services.
3. Locations of proposed dust- and noise-control temporary partitions and means of egress.

D. Pre-demolition Photographs or Videotape: Show existing conditions of adjoining construction and site improvements, including finish surfaces that might be misconstrued as damage caused by demolition operations.

E. Retain record submittal below if applicable. Landfill records may be required by Owner when discarded demolished materials contain hazardous wastes.

1.6 QUALITY ASSURANCE

A. Demolition Firm Qualifications: An experienced firm that has specialized in demolition work similar in material and extent to that indicated for this Project.

B. Regulatory Requirements: Comply with governing EPA notification regulations before beginning demolition. Comply with hauling and disposal regulations of authorities having jurisdiction.

C. Standards: Comply with ANSI A10.6 and NFPA 241.

1.7 PROJECT CONDITIONS

A. Notify Owner's Representative of discrepancies between existing conditions and Drawings before proceeding with demolition.

B. Hazardous or Regulated Materials: It is not expected that hazardous or regulated materials will be encountered in the Work.

1. If materials suspected of containing hazardous or regulated materials are encountered, do not disturb; immediately notify Owner's Representative and Owner.

C. Storage or sale of removed items or materials on-site is not permitted.

D. Utility Service: Maintain existing utilities indicated to remain in service and protect them against damage during demolition operations.

E. Maintain fire-protection facilities in service during demolition operations.

PART 2- PRODUCTS

Not Applicable

PART 3- EXECUTION

3.1 EXAMINATION

A. Locate existing utilities and verify that utilities have been disconnected and capped.

B. Survey existing conditions and correlate with requirements indicated to determine extent of demolition required.

C. Inventory and record the condition of items to be removed and disposed of legally off-site and items to be removed and salvaged.

D. When unanticipated mechanical, electrical, or structural elements that conflict with intended function or design are encountered, investigate and measure the nature and extent of conflict. Promptly submit a written report to Owner's Representative.

E. Survey of Existing Conditions: Record existing conditions by use of measured drawings, preconstruction photographs, preconstruction videotapes, and templates.

F. Perform surveys as the Work progresses to detect hazards resulting from demolition activities.

3.2 UTILITY SERVICES AND MECHANICAL/ELECTRICAL SYSTEMS

A. Existing Services/Systems: Maintain services/systems indicated to remain and protect them against damage during demolition operations.

1. Comply with requirements for existing services/systems interruptions specified in Division 1.

B. Service/System Requirements: Locate, identify, disconnect, and seal or cap off indicated utility services and mechanical/electrical systems serving areas to be demolished.

1. Owner will arrange to shut off indicated services/systems under Owner's direct control when requested by Contractor in writing with a minimum 72 hour notice.

2. If services/systems are required to be removed, relocated, or abandoned, before proceeding with demolition provide temporary services/systems that bypass area of demolition and that maintain continuity of services/systems to other parts of building.

3. The Contractor is cautioned to exercise all care to ascertain if utility services are active (live) or abandoned. Should any utility service not be cut off, capped, or disconnected, the Contractor shall not disturb the same and shall contact the utility company immediately for disconnection.

3.3 PREPARATION

A. Site Access and Temporary Controls: Conduct demolition and debris-removal operations to ensure minimum interference with roads, streets, walks, walkways, and other adjacent occupied and used facilities.

B. Temporary Facilities: Provide temporary barricades and other protection required to prevent injury to people and damage to adjacent buildings and facilities to remain.

1. Provide protection to ensure safe passage of people around demolition area and to and from occupied portions of building.

C. Temporary Shoring: Provide and maintain shoring, bracing, and structural supports as required to preserve stability and prevent movement, settlement, or collapse of construction and finishes to remain, and to prevent unexpected or uncontrolled movement or collapse of construction being demolished.

1. Strengthen or add new supports when required during progress of demolition.

3.4 DEMOLITION, GENERAL

A. General: Demolish and remove existing construction only to the extent required by new construction and as indicated. Use methods required to complete the Work within limitations of governing regulations and as follows:

1. Remove decayed, vermin-infested, or otherwise dangerous or unsuitable materials and promptly dispose of legally off-site.

2. Legally dispose of demolished items and materials promptly.

B. The Contractor shall take every precaution to guard against any movement or settlement of adjacent buildings or structures and shall provide and place, at his own expense, any bracing or shoring necessary or proper in connection therewith; and shall be solely and entirely responsible for the safety and support of such buildings or structures; and shall be solely liable for any such movement or settlement and any damage or injury caused thereby or resulting therefrom. If at any time the safety of any adjacent building or structure shall appear to be endangered, the Contractor shall cease operations, notify the Owner, and, at his own expense, shall take all proper means to support such building or structure and shall not resume operations until permission has been secured in writing from Owner or Owner's Representative. If the Owner or Owner's Representative considers additional bracing or shoring necessary to safeguard and prevent any such movement or settlement, the Contractor shall promptly design, provide and place, at his own expense, any such bracing or shoring as necessary. All designs shall be approved by a Professional Engineer.

C. Existing Items to Remain: Protect construction indicated to remain against damage and soiling during demolition.

3.5 DEMOLITION PROCEDURES FOR SPECIFIC MATERIALS

A. Concrete Structures: Demolish in small sections. Cut concrete walls evenly to a depth of at least 4 feet below final grade at junctures with construction to remain, using heavy equipment except where complete removal required for new work. Dislodge concrete from reinforcement at perimeter of areas being demolished, cut reinforcement, and then remove remainder of concrete indicated for demolition.

B. Concrete Slabs-on-Grade: Saw-cut perimeter of area to be demolished, then break up and remove.

3.6 ABANDONED MATERIALS OR STRTUCTURES

A. Pipes to be abandoned shall be capped off at each end and filled with a flowable fill concrete.

B. Manholes and existing structures shall be removed to 4 feet below finish grade and filled with sand, stone or other approved material. Holes shall be cut in the bottom to allow collected water to drain.

3.7 DISPOSAL OF DEMOLISHED MATERIALS

A. General: Except for items or materials indicated to be reused, salvaged, reinstalled, or otherwise indicated to remain Owner's property, remove demolished materials from Project site and legally dispose of them in an EPA-approved landfill.

1. Do not allow demolished materials to accumulate or remain on-site longer than 72 hours.

2. Remove and transport debris in a manner that will prevent spillage on adjacent surfaces and areas.

3. Remove debris from elevated portions of structure by chute, hoist, or other device that will convey debris to grade level in a controlled descent.

B. Burning: Do not burn demolished materials.

C. Disposal: Transport demolished materials off Owner's property and legally dispose of them.

3.8 CLEANING

A. Clean adjacent structures and improvements of dust, dirt, and debris caused by demolition operations. Return adjacent areas to condition existing before demolition operations began.

END OF SECTION

SECTION 02230
DEWATERING

PART 1 - GENERAL

1.1 SUMMARY

Keep all excavations and site structures free from water during construction.

1.2 RELATED SECTIONS

Intent: The provisions and intent of the AGREEMENT, including the General Conditions, Supplementary Conditions, and other requirements of the Contract Documents apply to the WORK as specified in this section. WORK related to this Section is described throughout the Specifications.

1.3 SUBMITTALS

A. Dewatering Plan: CONTRACTOR shall submit, for ENGINEER'S review, Drawings and data showing its proposed plan and required equipment for dewatering of all WORK areas. The Drawings and data shall include the planned method of dewatering excavations, wells, well points, sumps, collection and discharge lines, standby units proposed, and protective fills and ditches required for control of ground water, leachate and surface water.

B. Schedule: The plan for dewatering shall be submitted within 15 days before the start of work. CONTRACTOR shall furnish such other information as may be required for ENGINEER'S complete understanding and analysis of the dewatering, grading and excavation plan.

C. Engineer's Review: Review by ENGINEER shall not relieve CONTRACTOR of the responsibility for the adequacy of the dewatering plan or for furnishing all equipment, labor and materials necessary for dewatering the various parts of the WORK. If, during the progress of the WORK, it is determined by ENGINEER that the dewatering system grading and excavation Drawings, text and proposed methodology are inadequate, or that CONTRACTOR'S plan of construction is inoperative, CONTRACTOR shall, at its sole expense, furnish, install and operate such additional dewatering equipment and make such changes in other features of the Dewatering Plan or operation as may be necessary to perform the WORK in a manner satisfactory to ENGINEER.

PART 2 - PRODUCTS

Not Applicable.

PART 3 - EXECUTION

3.1 METHODS

A. Method: Dewatering can be accomplished by ordinary pumping methods, by the use of underdrains or deep well points, whichever will produce the above results. The CONTRACTOR shall ensure that continuous dewatering can be provided through the method chosen.

B. Location: All site WORK areas shall be dewatered where surface and/or ground water flows, if any, will adversely impact construction.

C. Maintenance: All permanent improvements shall be constructed in areas free from water. Construct and maintain all permanent or temporary slopes, dikes, levees, drainage ditches, sumps, and observation wells necessary for the removal of water from WORK areas. Design, furnish, install, maintain, and operate all necessary pumping and other dewatering equipment required for dewatering the various site WORK areas and for keeping the foundation and other areas free from water from any and all sources.

D. Schedule: All dewatering shall be performed in advance of grading, excavation and/or filling. The dewatering shall be accomplished in a manner that will prevent loss of fines from the foundation, will maintain stability of all excavated slopes and bottoms of excavations, and will permit all construction operations to be performed in the dry. Dewatering of excavations shall be performed to the extent required to permit placement of compacted fill materials in the dry and to prevent sloughing of the excavation side slopes.

E. Requirements: Lower the ground water level a minimum of 3 feet below sub-foundation grade or as recommended by Geotechnical Engineer prior to sub-foundation preparation and placement of foundation materials. During the placement and compaction of fill or bedding materials, the water level shall be maintained at this level in order that the required compaction can be achieved.

Where conditions are such that running or standing water occur in the trench bottom or the soil in the trench bottom displays a "quick" tendency, the water shall be removed by pumps and suitable means such as well points or previous underdrain bedding until the pipe has been installed and the backfill has been placed to a efficient height to prevent pipe flotation.

No installation will be permitted in trenches unless the subgrade is dry. If, in the opinion of the ENGINEER, the CONTRACTOR has failed to obtain a dry subgrade by use of all known methods of trench dewatering, the ENGINEER may then order the CONTRACTOR to excavate below grade and place sufficient selected fill material over the trench bottom. Additional excavation and fill shall meet the requirements of Division 2 and be at no extra cost.

3.2 PROTECTION OF FOUNDATIONS AND EXISTING FACILITIES

A. Contingency: Furnish standby equipment of sufficient size and capacity to insure continuous operation of the dewatering system. Any damage to structures due to a failure of dewatering equipment shall be repaired by CONTRACTOR at its expense, to the satisfaction of ENGINEER. CONTRACTOR may consider the use of recharge systems or other methods of protection of existing facilities.

B. Completion: Dewatering shall be maintained in the WORK areas for as long as is necessary for the completion of WORK. Upon completion of the dewatering and control of water operation, all temporary dewatering facilities shall be removed in a manner satisfactory to ENGINEER.

3.3 DISPOSAL OF DRAINAGE WATER

The disposal of all water from the dewatering and control of water operation and surface drainage shall be accomplished in a manner to have no detrimental effect on any of the new or existing facilities or cause siltation of existing streams. The method and location of disposal of all water shall be subject to the approval of ENGINEER and OWNER; in addition, no water shall be drained into WORK completed or under construction without prior consent of ENGINEER or OWNER. All Commonwealth of Virginia erosion and sediment control requirements shall be met.

END OF SECTION 02230

SECTION 02300
EARTHWORK

PART 1 - GENERAL

1.1 SUMMARY

A. This Section includes the following:

1. Preparing subgrades.
2. Excavating and backfilling.
3. Drainage course for slabs-on-grade.
4. Subbase course for concrete walks and pavements.
5. Base course for roadway.

1.2 DEFINITIONS

A. Backfill: Soil materials used to fill an excavation. Materials for backfill shall be the same as Compacted Structural Fill as described herein.

B. Base Course: Layer placed between the subbase course and asphalt paving.

C. Bedding Course: Layer placed over the excavated subgrade in a trench before laying pipe.

D. Borrow: Satisfactory soil imported from off-site for use as fill or backfill.

E. Drainage Course: Layer supporting slab-on-grade used to minimize capillary flow of pore water.

F. Excavation: Removal of material encountered above design subgrade elevations.

1. Additional Excavation: Excavation below design subgrade as directed by Architect/Engineer. Additional excavation and replacement material will be paid for according in accordance with the unit prices set forth in the bid form.
2. Unauthorized Excavation: Excavation below design subgrade or beyond indicated dimensions without approval by Architect/Engineer. Unauthorized excavation, as well as remedial work directed by Architect/Engineer, shall be without additional compensation.

G. Fill: Soil materials used to raise existing grades.

H. Structures: Buildings, footings, foundations, retaining walls, slabs, tanks, curbs, mechanical and electrical appurtenances, or other man-made stationary features constructed above or below the ground surface.

I. Subbase Course: Layer placed between the subgrade and base course for asphalt paving, or layer placed between the subgrade and a concrete pavement or walk.

J. Design Subgrade: Generally, surface or elevation remaining after completing excavation, or top surface of a fill or backfill immediately below subbase, drainage course, or topsoil materials.

1. Unless described otherwise, design subgrade for structures is defined as the bearing elevation of concrete footings or structural slabs, extending one foot beyond the edge of the structure and extending up on a 2.5H:1V slope to existing grades.

K. Utilities include on-site underground pipes, conduits, ducts, and cables, as well as underground services within buildings.

L. Rock: Mass Rock is defined as any material that cannot be dislodged by a Caterpillar Model No. D-8 heavy-duty tractor, or equivalent, equipped with a hydraulically operated, single-tooth power ripper without the use of hoe ramming or blasting. Trench rock is defined in terms of a Caterpillar Model No. 325 hydraulic excavator, or equivalent, instead of a Caterpillar D-8 tractor. These classifications do not include materials such as hardpan, loose rock, concrete, cemented gravel, or other materials that can be removed by means other than hoe-ramming or blasting, but for reasons of economy in excavating, the contractor chooses to remove by hoe-ramming or blasting. Mass and trench rock do not include boulders less than 1 cubic yard in volume. Boulders larger than 1 cubic yard in volume will be considered rock for payment purposes.

1.3 PROJECT CONDITIONS

A. Existing Utilities: Do not interrupt utilities serving facilities occupied by Owner or others unless permitted in writing by Architect/Engineer and then only after arranging to provide temporary utility services according to requirements indicated.

B. Do not commence earth moving operations until temporary erosion and sedimentation control measures are in place.

C. Two Geotechnical Engineering Reports have been prepared for this project by Schnabel Engineering South, LLC, entitled *Zion Crossroads Water and Sewer System – Wastewater Pump Station dated March 2017* and *Zion Crossroads Water and Sewer System – Water Booster Station dated March 2017*. This report is for informational purposes only and should not be considered part of the Contract Documents. The opinions expressed represent the Geotechnical Engineer's Interpretation of the subsurface conditions, tests, and the results of analyses conducted. Should the data contained in this report not be adequate for the Contractor's purposes, the Contractor may make, before bidding, independent exploration, tests and analyses.

1.4 QUALITY ASSURANCE

A. Geotechnical Testing Agency Qualifications: An independent testing agency hired by Contractor and qualified according to ASTM E 329 to conduct soil materials and rock-definition testing, as documented according to ASTM D 3740 and ASTM e 548 for testing indicated.

PART 2 - PRODUCTS

2.1 SOIL MATERIALS

A. General: Provide approved borrow soil materials when sufficient satisfactory soil materials are not available from excavations.

B. Compacted Structural Fill: ASTM D 2487 Soil Classification Groups CL, ML, SC, SM, SP, SW, GC, GM, GP, or GW, or a combination of these group symbols; free of rock or gravel larger than 3 inches (75 mm) in any dimension, debris, waste, frozen materials, vegetation, and other deleterious matter.

C. Unsatisfactory Soils: ASTM D 2487 Soil Classification Groups MH, CH, OL, OH, and PT, a combination of these group symbols, or as determined by the geotechnical engineer.

D. Borrow: On-Site soils meeting compacted structural fill or Off-Site borrow materials meeting Soil Classification Groups SC, SM, SP, SW, GC, GM, GP or GW per ASTM D-2487; free of rock or gravel larger than 3 inches (75 mm) in any dimension, debris, waste, frozen materials, vegetation, and other deleterious matter.

E. Backfill and Fill: Compacted Structural Fill.

F. Subbase: Naturally or artificially graded mixture of natural or crushed gravel, crushed stone, and natural or crushed sand; ASTM D 2940; with at least 90 percent passing a 1-1/2- inch(38-mm) sieve and not more than 12 percent passing a No. 200(0.075-mm) sieve.

G. Base: Naturally or artificially graded mixture of natural or crushed gravel, crushed stone, and natural or crushed sand; ASTM D 2940; with at least 95 percent passing a 1-1/2-inch(38-mm) sieve and not more than 8 percent passing a No. 200(0.075-mm) sieve.

H. Bedding: Naturally or artificially graded mixture of natural or crushed gravel, crushed stone, and natural or crushed sand; ASTM D 2940; except with 100 percent passing a 1-inch(25-mm) sieve and not more than 8 percent passing a No. 200(0.075-mm) sieve.

I. Drainage Fill: Washed, narrowly graded mixture of crushed stone, or crushed or uncrushed gravel; ASTM D 448; coarse-aggregate grading Size 57; with 100 percent passing a 1-1/2- inch(38-mm) sieve and 0 to 5 percent passing a No. 8 (2.36-mm) sieves.

J. Sand: ASTM C33; fine aggregate, natural or manufactured sand.

K. Lean Concrete: Self compacting, flowable concrete material produced from the following:

1. Portland Cement: ASTM C 150, Type II.
2. Fly Ash: ASTM C 618, Class C or F.
3. Normal-Weight Aggregate: ASTM c33, 3/8-inch nominal maximum aggregate size.
4. Foaming Agent: ASTM C 869.

5. Water: ASTM C 94, C94M.
6. Air-Entraining Admixture: ASTM C 260.

PART 3 - EXECUTION

3.1 PREPARATION

A. Protect structures, utilities, sidewalks, pavements, and other facilities from damage caused by settlement, lateral movement, undermining, washout, freezing temperatures or frost, and other hazards created by earthwork operations. Provide protective insulating materials as necessary.

B. Provide erosion-control measures to prevent erosion or displacement of soils and discharge of soil-bearing water runoff or airborne dust to adjacent properties and walkways.

C. Prevent surface water and ground water from entering excavations, from ponding on prepared subgrades, and from flooding Project site and surrounding area.

D. Protect subgrades from softening, undermining, washout, and damage by rain or water accumulation.

3.2 EXCAVATION

A. Excavation to design subgrade shall be classified regarding rock and excavations below design subgrade, and unclassified regarding other materials. Excavation of rock materials and unsuitable materials as defined herein, shall be based upon the quantities shown in the bid form.

1. If excavated materials intended for fill and backfill include unsatisfactory soil materials and rock, replace with satisfactory soil materials.
2. Compensation for rock within the deign subgrade envelope shall be made based upon unit prices set forth in the bid form.
3. Compensation for approved removal of rock and replacement with compacted structural fill beyond design subgrade shall be based upon unit prices set forth in the bid form.
4. Compensation for approved removal of unsatisfactory soil materials and replacement with compacted structural fill beyond design subgrade shall be based upon unit prices set forth in the bid form.

B. Excavate for structures, pavements, and walks to indicated elevations and dimensions. Extend excavations for placing and removing concrete formwork, for installing services and other construction, and for inspections. Trim bottoms to required lines and grades to leave solid base to receive other work.

C. Proof roll subgrades, before placing concrete, filling or placing aggregate courses, with loaded dump truck to identify soft pockets and areas of excess yielding. Do not proof roll wet or saturated subgrades. Unsuitable areas shall be undercut and replaced with compacted structural fill at the direction of the testing agency.

1. All undercut shall be surveyed to determined volume removed. No truck counts shall be allowed.

D. Reconstruct subgrades damaged by freezing temperatures, frost, rain, accumulated water, or construction activities. The contractor shall use pumps, site drainage or other measures to minimize water levels to the satisfaction of the testing agency.

E. Fill unauthorized excavation under foundations or wall footings by extending bottom elevation of concrete foundation or footing to excavation bottom, without altering top elevation. Lean concrete may be used to backfill to original subgrade elevation when approved by Engineer.

1. Fill unauthorized excavations under other construction as directed by Engineer.

F. Stockpile borrow materials and satisfactory soil materials, without intermixing, in shaped, graded, drained, and covered stockpiles. Stockpile soil materials away from edge of excavations and outside drip line of remaining trees.

G. All excavations shall be braced or sloped in accordance with current OSHA regulations. Excavations greater than 20 feet deep require in writing a slope stability evaluation for open excavations by a licensed geotechnical engineer or a sheeting design professional for sloped excavations. The evaluation shall be prepared and sealed by a professional engineer registered in the Commonwealth of Virginia. The specialty contractor shall have at least five years experience in this type work and shall submit plans through the general contractor for review by the Engineer. It is the contractor responsibility to provide this design to the Engineer for review prior to beginning deep excavations.

3.3 BACKFILLS AND FILLS

A. Fill: Place and compact fill material in layers to required elevations. Plow, scarify, bench, or break up sloped surfaces steeper than 1 vertical to 4 horizontal so fill material will bond with existing material.

B. Uniformly moisten or aerate subgrade and each subsequent fill or backfill layer before compaction to within 2 percent of optimum moisture content.

1. Remove and replace, or scarify and air dry, otherwise satisfactory soil material that exceeds optimum moisture content by 3 percent and is too wet to compact to specified dry unit weight.

C. Compaction: Place backfill and fill materials in layers not more than 8 inches(200 mm) in loose depth for material compacted by heavy compaction equipment, and not more than 4 inches(100 mm) in loose depth for material compacted by hand-operated tampers. Only light hand-operated equipment should be used to compact back fill against walls.

D. Compact soil to not less than the following percentages of maximum dry density according to ASTM D 698:

1. Under structures, building slabs, steps, and pavements, scarify and recompact top 12 inches (300 mm) of existing subgrade and each layer of backfill or fill material at 95 percent.
2. Under walkways, scarify and recompact top 6 inches (150 mm) below subgrade and compact each layer of backfill or fill material at 95 percent.
3. Under lawn or unpaved areas, scarify and recompact top 6 inches (150 mm) below subgrade and compact each layer of backfill or fill material at 90 percent.

E. Grading: Uniformly grade areas to a smooth surface, free from irregular surface changes. Comply with compaction requirements and grade to cross sections, lines, and elevations indicated. Grade lawns, walks, and unpaved subgrades to tolerances of plus or minus 1 inch (25 mm) and pavements and areas within building lines to plus or minus 1/2 inch (13 mm).

F. Subbase and Base Courses: Under pavements and walks, place subbase course on prepared subgrade. Place base course material over subbase. Compact to required grades, lines, cross sections, and thickness to not less than 95 percent of maximum dry unit weight according to ASTM D 1557.

G. Under slabs-on-grade, place drainage course on prepared subgrade. Compact to required cross sections and thickness to not less than 95 percent of maximum dry unit weight according to ASTM D 698.

3.4 FIELD QUALITY CONTROL

A. Testing Agency: Contractor will engage a qualified independent testing and inspecting agency to perform field tests and inspections and to prepare test reports.

B. Allow testing agency to test and inspect subgrades and each fill or backfill layer. Proceed with subsequent earthwork only after test results for previously completed work comply with requirements.

C. When testing agency reports that subgrades, fills, or backfills have not achieved degree of compaction specified, scarify and moisten or aerate, or remove and replace soil to depth required; recompact and retest until specified compaction is obtained to the satisfaction of the geotechnical engineer.

D. Footing Subgrade: At footing subgrades, at least one test of each soil stratum will be performed to verify design bearing capacities.

E. Testing Agency will test compaction of soils in place according to ASTM D 1556, ASTM D 2167, ASTM d 2922, and ASTM D 2937, as applicable. Tests will be performed at the following locations and frequencies:

1. Paved and Building Slab Areas: At subgrade and at each compacted fill and backfill layer, at least one test for every 2,500 sq. ft. or less of paved area or building slab, but in no case fewer than one test per lift.
2. Foundation Wall Backfill: At each compacted backfill layer, at least one test for every 100 feet or less of wall length, but no fewer than two tests.

F. When testing agency reports that subgrades, fills or backfills have not achieved degree of compaction specified, scarify and moisten or aerate, or remove and replace soil materials to depth required; recompact and retest until specified compaction is obtained.

3.5 PROTECTION AND DISPOSAL

A. Protect newly graded areas from traffic, freezing, and erosion. Keep free of trash and debris.

B. Repair and reestablish grades to specified tolerances where completed or partially completed surfaces become eroded, rutted, settled, or where they lose compaction.

C. Where settling occurs before Project correction period elapses, remove finished surfacing, backfill with additional soil material, compact, and reconstruct surfacing.

D. Disposal: Remove surplus satisfactory soil and waste material, including unsatisfactory soil, trash, and debris, and legally dispose of it off Owner's property.

END OF SECTION

SECTION 02325
TRENCHING AND BACKFILLING

PART 1 - GENERAL

1.1 This section is designed to provide the minimum requirements for trenching and backfilling of pipe trenches. Should the drawings provide specific details for specific installations the drawing requirements shall take precedent. When working in VDOT right of ways the VDOT requirements shall take precedent.

1.2 Earthwork and trenching **EXCAVATION IS UNCLASSIFIED** and includes excavation to subgrade elevations indicated, regardless of character of materials and obstructions encountered. No extra payment will be made, regardless of the suitability or unsuitability of on-site soils for the disposal or importing of soils to the project site.

1.3 Locate existing utilities, culverts and structures, above or below ground, before any excavation starts. Coordinate work with utility companies. Protect, maintain in service, and prevent damage to utilities not designated to be removed. When utilities are encountered and are not shown on the Contract Drawings or when locations differ from those shown on the Contract Drawings, notify the Inspector for instructions before proceeding.

1.4 Explosives

A. Work with explosives shall be executed by persons who are licensed or otherwise authorized by governing authorities for the work required.

B. Store and use explosives in accordance with Federal, State and Local regulations. The Contractor shall be responsible for and shall satisfactorily correct all damage resulting from use of explosives.

1.5 Testing and Inspection

A. In trenching operations, compaction testing shall be performed at the start of trenching, in increments of approximately 2000L.F. of trench and at all commercial driveway entrance crossings.

B. Allow Inspector to approve subgrade and each fill layer, or for every 2,000 square feet of fill placed, whichever results in more frequent inspection.

C. The degree of compaction obtained shall be verified by means of field density tests made by an Independent Laboratory. Where tests indicate a deficiency in degree of compaction, the Contractor shall correct such conditions and the Testing Laboratory shall make additional tests in order to verify that the corrected work has been satisfactory. The Testing Laboratory shall provide four (4) certified copies of all test reports.

1.6 Definitions

A. Excavation: Removal of material encountered to required subgrade <u>and/or</u> subsoil elevations indicated, and the subsequent disposal of materials removed.

B. Fill: Material placed and compacted above the level of the subsoil which existed before construction of the project.

C. Rock: Hard bed rock, boulders or similar material requiring the use of rock drills and/or explosives for removal. The criteria for classification of general excavation as rock is any material which cannot be dislodged by a Caterpillar D-8 Tractor, or equivalent, equipped with a single tooth hydraulically operated power ripper. The criteria for trench rock shall be that a Caterpillar 345 Backhoe, or equivalent, with a proper width bucket cannot remove the material.

D. Subgrade: The undisturbed earth, or the compacted soil layer, immediately below granular subbase, drainage fill, or topsoil materials.

E. Subsoil: The undisturbed earth immediately below the existing topsoil layer.

F. Unauthorized Excavation: Removal of materials below indicated subgrade elevations or beyond horizontal excavation dimensions without specific direction of the Inspector.

G. Undercut Excavation: When excavation has reached required sub-grade elevations, notify the Inspector who will make an inspection of conditions. If unsuitable bearing material is encountered at required subgrade elevations, carry excavations deeper as directed by the Inspector.

H. Unsuitable Material: Material such as clay mass, frozen materials, cinders, ashes, refuse, and vegetable, organic material or any other material deemed unsuitable by the Inspector. Unsuitable material shall be removed and replaced with suitable material as specified herein for the intended use.

I. Bedding. Bedding is the material placed under the pipe.

J. Haunching. Material that is placed on the sides of the pipe to the spring line.

K. Initial Backfill. Material placed on top of the haunch material until 12" above the pipe.

L. General Backfill. Material Placed on top of the initial backfill up to grade.

1.7 Suitability of Materials

A. Unless otherwise noted, the Contractor shall be responsible for the disposal of excess material (including but not limited to undercut, root mat and excess topsoil and fill material), obtaining borrow material and the suitability of all on-site material above subgrade.

PART 2 - PRODUCTS

2.1 Product Definitions

A. Clean Earth Fill: Approved material free of debris, roots, frozen materials, organic matter, rock or gravel larger than 2 inches in any dimension or other harmful matter and be classified as ML or better material in accordance with the Unified Soils System, ASTM D-2487.

B. Fine Aggregate: #9 or #10 stone as per VDOT Road and Bridge Specifications Section 203 or Grade A or Grade B fine aggregate as per VDOT Road and Bridge Standard Section 202.

C. Coarse Aggregate: #57 stone as per VDOT Road and Bridge Specifications Section 203.

D. Crusher Run Aggregate: #26 as per VDOT Road and Bridge Specifications Section 205.

E. Select Material: Type I or II according to Section 207 of the VDOT Road and Bridge Specifications.

F. Shoulder Stone: Aggregate material #21A or #21B as per VDOT Road and Bridge Specifications Section 209.

G. Topsoil: In trenching operations, topsoil shall be the top 6 inches of original soil from the trench. Otherwise, topsoil shall be fertile, friable loam, containing not less than 2 percent by weight of finely divided, decomposed vegetation. Topsoil shall be free of subsoil, clay lumps, brush, weeds, roots larger than 1/2 inch, stones larger than 1/2 inch diameter and other material toxic or harmful to growth.

H. Geotextile Fabric: Woven or nonwoven polypropylene or polyester equaling or exceeding the following tests.

1.	Weight	ASTM D-1910	3.9 oz per sq. yd. minimum
2.	Grab Tensile Strength	ASTM D-1682	200 lbs. minimum
3.	Trapezoid Tear Strength	ASTM D-1117	100 lbs. minimum
4.	Grab Modulus (Mullen Burst)	ASTM D-3786	370 lbs. minimum

PART 3 - EXECUTION

3.1 General Excavation

A. Remove vegetation, debris, unsatisfactory materials and harmful materials prior to placement of fill. Plow, strip, or break up sloped surfaces steeper than 4 to 1 so that fill material will bond with existing surface.

B. Strip existing topsoil, leaf mold and organic materials, meeting topsoil requirements. Deposit in storage piles separate from other excavated material.

C. Provide adequate and positive site drainage throughout construction. Keep excavations free of water while work is being performed and until backfilled. Where underground streams or springs are found, provide temporary drainage and notify the Inspector.

D. Excavate unsatisfactory soil materials encountered that extend below required elevations, to the additional depth as directed by the Inspector.

E. Where rock is encountered so that a manhole, vault, or other structure will bear on rock, the rock shall be used to support the foundation. When only a portion of the foundation will bear on rock, the Contractor shall excavate the rock at least 8 inches below the foundation and provide at least 8 inches of aggregate fill.

F. Where unauthorized excavation has been carried below authorized depth, backfill and compact in the same manner as specified for authorized excavations of same classification, unless otherwise directed by the Inspector.

G. Stockpile excavated soil material satisfactory for backfill or fill until required. Place, grade and shape stockpiles for proper drainage. Do not store within drip lines of trees indicated to remain.

H. Sheeting and Shoring

1. Sheeting and shoring shall be provided as necessary to construct and protect the excavation, structures of all types, and as necessary for the safety of the employees.

2. All sheeting and bracing shall be removed unless directed otherwise by the Inspector, in such a manner so the construction or other structures are not endangered. All voids left or caused by the withdrawal of sheeting shall be backfilled immediately with approved material and compacted by ramming with tools especially adapted for that purpose, or by other means directed by the Inspector.

3. All sheeting and bracing which is left in place shall be cut to a depth of eighteen inches below the final grade line. The cut off ends shall be removed from the site.

I. Remove surplus or unsuitable material and dispose of the materials off the site at no additional cost to the Owner.

J. Dewatering

1. Where conditions are such that running or standing water occurs in the trench bottom or the soil in the trench bottom displays a "quick" tendency, the water should be removed by pumps and suitable means such as well points or pervious underdrain bedding until the pipe has been installed and the backfill has been placed to a sufficient height to prevent pipe flotation.

K. Trenching

1. Excavate to the lines and grades indicated for pipelines and structures making proper allowance for pipe bedding materials, pipe bells and concrete form work.
2. Excavate pipeline trenches with vertical walls. Maintain trench width within allowable trench width from bottom of trench to a point 12 inches above top of pipe.

3. Where rock is encountered, excavate 6 inches below the pipe bottom and provide stone to bed the pipe.
4. Where unsuitable soil is encountered, excavate to depth determined by the Inspector and replace with coarse granular fill (pipe bedding) thoroughly and uniformly compacted.

3.2 Backfilling of Pipe and Trenches

A. The following is the minimum requirement for backfilling of pipes and trenches. Should the drawings indicate a deviation from these minimum specifications the more stringent shall apply.

B. Pipe Bedding

1. Ductile Iron Pressure Pipe

a. Ductile iron pipe shall be laid in a flat bottom trench on undisturbed earth. If rock is encountered at the bottom of the trench, bedding shall be a minimum of six inches of compacted course aggregate or crusher run aggregate. Trench bottom shall be hand excavated for bell holes at all joints. Over rock, the six-inch minimum depth of bedding shall be maintained at all joints or other pipe appurtenances. Bedding shall be compacted to a minimum 95 percent of maximum density as determined by ASTM D698 (standard Proctor).

2. Ductile Iron Gravity Pipe

a. Ductile iron pipe shall be laid on a minimum of 4 inches of compacted course aggregate or crusher run aggregate. If rock is encountered at the bottom of the trench, bedding material shall be a minimum of six inches. Trench bottom shall be hand excavated for bell holes at all joints. Over rock, the six-inch minimum depth of bedding shall be maintained at all joints or other pipe appurtenances. Bedding material shall be compacted to a minimum 95 percent of maximum density as determined by ASTM D698 (standard Proctor).

3. PVC, HDPE, PE and CT Pressure Pipe 3 inches and smaller

a. PVC, HDPE, PE and CT pipe shall be laid on a minimum of 4 inches of compacted fine aggregate placed upon undisturbed earth. If rock is encountered at the bottom of the trench, fine aggregate shall be a minimum of six inches. Trench bottom shall be hand excavated for bell holes at all joints. The minimum depth of bedding shall be maintained at all joints or other pipe appurtenances. Bedding material shall be compacted to a minimum 95 percent of maximum density as determined by ASTM D698 (standard Proctor).

4. PVC Pressure Pipe 4 inches and larger

a. PVC pressure pipe shall be laid on a minimum of 4 inches of compacted course aggregate or crusher run aggregate placed upon undisturbed earth. If rock is encountered at the bottom of the trench, course aggregate shall be a minimum of six inches. Trench bottom shall be hand excavated for bell holes at all joints. The minimum depth of bedding shall be maintained at all joints or other pipe appurtenances. Bedding material shall be compacted to a minimum 95 percent of maximum density as determined by ASTM D698 (standard Proctor).

5. PVC Gravity Pipe 6 inches and larger

a. PVC pressure pipe shall be laid on a minimum of 4 inches of compacted course aggregate or crusher run aggregate placed upon undisturbed earth. If rock is encountered at the bottom of the trench, bedding shall be a minimum of six inches. Trench bottom shall be hand excavated for bell holes at all joints. The minimum depth of bedding shall be maintained at all joints or other pipe appurtenances. Bedding material shall be compacted to a minimum 95 percent of maximum density as determined by ASTM D698 (standard Proctor).

C. Haunching

1. Haunching material shall be the same as the bedding material. Material shall be placed and consolidated under the pipe haunch to provide adequate side support to the pipe while avoiding both vertical and lateral displacement of the pipe from proper alignment. Haunching is placed to the pipe springline and shall be compacted to a minimum 95 percent of maximum density as determined by ASTM D698 (standard Proctor).

D. Backfilling Trenches

1. All trenches shall be backfilled immediately after the pipes and appurtenances are laid therein with the exception of pressure pipe, where joints are to remain uncovered until after pressure testing is completed.

2. Initial Backfill

a. Ductile Iron Pressure Pipe and Gravity Pipe

1) Initial backfill shall be with select material. Initial backfill shall begin at the springline of the pipe and shall be placed in six-inch layers up to a minimum level of 12 inches above the crown of the pipe. Initial backfill shall be compacted to a minimum 95 percent of maximum density as determined by ASTM D698.

b. PVC Pressure Pipe 4" and larger

1) Initial backfill shall be with select material. Initial backfill shall begin at the springline of the pipe and shall be placed in six-inch layers up to a minimum level of 12 inches above the crown of the pipe. Initial backfill shall be compacted to a minimum 95 percent of maximum density as determined by ASTM D698.

c. PVC, HDPE, PE and CT Pressure Pipe 3" and smaller

1) Initial backfill shall be with the same material as the haunching material and shall be placed in 6" layers to a minimum level of 6" over the crown of the pipe. The remainder of the initial

backfill shall be with select material to a minmum level of 12" above the crown of the pipe.

d. Gravity Pipe

1) Initial backfill shall be with select material. Initial backfill shall begin at the springline of the pipe and shall be placed in six-inch layers up to a minimum level of 12 inches above the crown of the pipe. Initial backfill shall be compacted to a minimum 95 percent of maximum density as determined by ASTM D698.

E. Final Backfill

1. General

a. Final backfill for trenches shall be with general backfill material. Final backfill not subjected to vehicular traffic or greater than 5' feet from the edge of pavement shall be placed in layers no greater than one foot thick and compacted to at least 90 percent maximum density as determined by ASTM D698. Final backfill shall not contain stones larger than 6 inches in their greatest dimension, the stones shall not be in excess of 20 percent of the volume of backfill material, and such stones shall be well distributed throughout the mass. Topsoil (in grassed areas) shall be deposited in the final layer of backfill to guarantee the areas will be returned to original or better conditions.

2. Roadways

a. Where excavation has been made through pavement, subgrades of roadways under construction, where subgrades are undercut by excavation, or where excavation is within 5' of edge of pavement, backfilling shall be performed with shoulder stone. Backfill material shall be placed in layers not greater than six inches thick, with each layer thoroughly compacted to 95 percent of maximum density as determined by ASTM D698. Work within VDOT rights-of-way shall meet all requirements of the Virginia Department of Transportation.

3.3 Compaction

A. Percentage of Maximum Density Requirements. Compact each layer of fill or backfill to not less than the following percentages of the maximum density at optimum moisture content as determined by ASTM D 698 (AASHTO T-99). Compact soil materials using equipment suitable for materials to be compacted and work area locations.

1. 95 percent beneath and within 25 feet of buildings and structures, including those shown for future construction.

2. 95 percent beneath pavements, walks, road shoulders, including those shown for future construction or proposed, 95 percent up to 12 inches above top of pipes.

3. 90 percent in other unpaved areas.

4. If the density of the adjacent soil is more than the density specified, compact to a density not less than the density of the adjacent soil.

B. Use power-driven hand tampers for compacting materials adjacent to structures and in areas inaccessible to rollers. Use equipment capable of adding moisture to the soil material as determined by moisture-density tests. Where required, uniformly apply water to the surface of the subgrade or layer of soil material in such a manner as to prevent free water appearing on the surface, either during or subsequent to compacting operations.

C. Remove and replace, or scarify and air dry, soil material that is too wet to permit compaction to specified percentage of maximum density.

D. Do not place or compact material that is muddy, frozen, or contains frost or ice.

3.4 Pipe Bedding and Backfill

A. Place clean earth fill to obtain elevations shown on the drawings. Do not place fill on muddy or frozen areas.

B. When the existing ground surface has been disturbed and has a density of less than that specified for the particular area classification, scarify the ground surface, pulverize, adjust moisture condition to optimum moisture content, and compact to required depth and percentage of maximum density. Excavate depressions caused by removal of stumps or other clearing operations to firm subgrade. Fill with clean earth fill.

C. Place backfill and fill materials in loose lifts no less than 4 inches and no more than 8 inches in depth. Before compaction, moisten or aerate each layer as necessary to provide optimum moisture content.

D. Place backfill materials evenly adjacent to structures. Take care to prevent wedging action of the backfill against structures by carrying the material uniformly around the structure to approximately the same elevation in each lift.

E. Backfill excavations to excess elevations (above the finished grade) to allow for shrinkage and settlement. Excess elevation under paved and surfaced roadways and parking areas shall not exceed 2 inches.

F. Place and compact bedding in accordance with the construction plans below bottom of pipe prior to laying pipe. Where directed by the Inspector place soil stabilization fabric in the excavation before placing bedding. Place fabric in accordance with the manufacturer's recommendations.

G. Compact pipe bedding using compaction equipment suitable for the situation. If necessary hand tamp and rod as required to prevent settlement.

H. Unless otherwise required, backfill trench to a compacted depth of one foot over the pipe with clean earth fill. Backfill shall be placed uniformly on each side of the pipe and compacted in layers not exceeding 6 inches. Do not backfill when the subgrade is muddy or frozen or when the backfill material is frozen or muddy.

3.5 Grading.

A. In the VDOT R-O-W Grade in compliance with VDOT specifications. Uniformly grade areas within limits of grading, including adjacent transition areas. Smooth finished surface within specified tolerances, compact with uniform levels or slopes between points where elevations are indicated, or between such points and existing grades.

B. Protect newly graded areas from traffic and erosion. Where compacted areas settle, or are disturbed by subsequent construction or adverse weather, scarify the surface, reshape and compact to the required density, with additional fill material if required. Use hand tamper for recompaction over underground utilities.

C. Where topsoiling is specified, excavate or fill below finished grades shown, leaving space for topsoiling.

D. Where not otherwise shown on the Contract Drawings, all disturbed areas shall be restored to the original grade.

E. Tolerances

1. Shape subgrade under pavements to line, grade, and cross-section to within 1/2 inch of required subgrade elevations.

2. Finish areas to receive topsoil to within 0.10 foot of required elevations.

Trench Cross-section Terminology

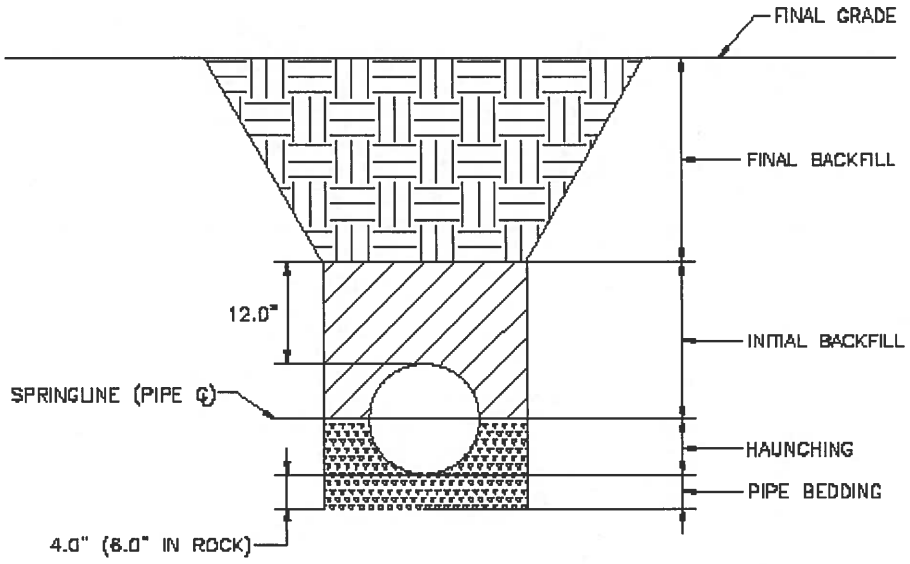

TRENCH CROSS–SECTION TERMINOLOGY

END OF SECTION

SYSTEM 02600
PIPING SYSTEM TESTING

PART 1 - GENERAL

1.1 SUMMARY

A. Testing and Disinfection shall be as described herein.

1.2 References

A. AWWA C600, Installation Of Ductile Iron Mains and Their Appurtenances", latest addition

1.3 QUALITY ASSURANCE

A. Comply with all applicable codes and regulations as required by regulatory agencies having jurisdictions over this Work.

1.4 CONNECTIONS TO EXISTING SYSTEM:

A. The Contractor shall make connections to the existing system under a pressure or non-pressure condition, as indicated, complying with the system owner's requirements for the time of day such work can be done. The Contractor shall pay all costs associated with the connections unless otherwise indicated. If the system owner performs the work, the Contractor shall arrange for the work to be done.

B. Owner's valves and equipment shall be operated only by the Owner.

C. CONTRACTOR shall install as indicated on the Contract Drawings valves to isolate sections of the Pipe system to be tested.

D. After testing is completed and accepted, CONTRACTOR shall make final connections as indicated on the Contract Drawings.

PART 2 - PRODUCTS (not used)

PART 3 - EXECUTION

3.1 PRESSURE TESTING OF WATER MAINS AND PRESSURE PIPE

A. General

1. The test pressure shall be a minimum of 150 psi or a minimum of 1.5 times the maximum working pressure at all parts of the test section, whichever is greater.

2. The test pressure shall not exceed the thrust restraint design pressures or 1.5 times the pressure rating of the pipe or joint, whichever is less (as specified by the manufacturer).

3. The test pressure shall not exceed the rated working pressure of the valves when the pressure boundary of the test section includes closed resilient- seated gate valves or butterfly valves.

4. CONTRACTOR shall install taps on the top of the pipe for venting air at all high points or as required to eliminate all the air in the system at no cost to the OWNER.

5. On distribution lines valves shall be installed at a maximum distance of 2000 feet.

6. Where the distribution system consists of various sizes of pipe, valves shall be added as required to isolate the different pipe size sections.

B. Test setup and pressurization

1. Following the installation of any new pipeline, all newly laid pipe or any valved section thereof shall be subjected to a hydrostatic pressure test. Each valved section of pipeline shall be slowly filled with water. When venting air from pipelines, it is important to limit the pipeline fill rate to avoid excessive surge pressures when the water reaches the air venting opening(s). The specified test pressure shall be applied using a suitable pump connected to the pipeline. (Note: The specified test pressure shall be based on the elevation of the lowest point of the pipeline or section under test and corrected to the elevation of the test gauge. Before applying the specified test pressure, air shall be expelled completely from the pipeline section under test. If permanent air vents are not located at all high points, corporation stops shall be installed at these points to expel any air as the line is filled with water. Corporation stops should be rated for the design pressure of the pipeline. Exceeding design pressure is not recommended and should be checked with the product manufacturer before proceeding. Following removal of any air, the corporation stops shall be closed and the test pressure applied (at the conclusion of the pressure test, the corporation stops shall be removed and the pipe plugged, or left in place as required by the OWNER). After filling the pipeline and before application of the test pressure, the test section shall be maintained at the working pressure for a sufficient period of time for it to stabilize with respect to line movement under pressure, water absorption by the lining, and so on. This may require several cycles of pressurizing and bleeding trapped air prior to beginning the test. The hydrostatic test shall be of at least a 2-hour duration. The test pressure shall not vary by more than ±5 psi for the duration of the test. Test pressure shall be maintained within this tolerance by adding makeup water through the pressure test pump into the pipeline. The amount of makeup water added shall be accurately measured (in gallons per hour) by suitable methods and shall not exceed the applicable testing allowance.

C. EXAMINATION.

1. Any exposed pipe, fittings, valves, hydrants, and joints shall be examined carefully during the pressure test. Any damaged or defective pipe, fittings, valves, hydrants, or joints that are discovered during or following the pressure test shall be repaired or replaced with reliable material, and the test shall be repeated until satisfactory results are obtained.

D. Testing Allowance Mechanical Joint and Bell and Spigot Piping

1. Testing allowance shall be defined as the maximum quantity of makeup water that can be added into a pipeline undergoing hydrostatic pressure testing, or any valved section thereof, to maintain pressure within ±5 psi of the specified test pressure (after the pipeline has been filled with water and the air has been expelled). The

testing allowance is exceeded if the quantity of makeup water is greater than that determined by the following formula:

$$L = \frac{SD(P^{.5})}{148{,}000}$$

Where:

L = testing allowance (makeup water) (gph)

S = length of pipe tested (ft)

D = nominal diameter of the pipe (in.)

P = average test pressure during the hydrostatic test (psi [gauge])

2. These formulas are based on a testing allowance of 10.49 gpd/mi/ in. of nominal diameter at a pressure of 150 psi.

3. The testing allowance may not be reasonable if the pressure boundary of the test section includes appurtenances subjected to pressures above their rated working pressures because of possible leakage by those appurtenances.

4. When testing against closed metal seated valves an additional testing allowance per closed valve of 0.0078 gal/hr/in of nominal valve size shall be allowed. When hydrants are in the test section, the test shall be made against the main valve in the hydrant.

E. Acceptance of installation

1. Acceptance shall be determined on the basis of testing allowance only. If any test of a new pipeline requires a quantity of makeup water greater than the testing allowance repairs or replacements shall be accomplished in accordance with the contract documents. All visible leaks shall be repaired regardless of the allowance used for testing.

3.2 TESTING OF ABOVE GROUND PIPING

A. Testing

1. Testing shall be done as stated in section 3.1 above.

2. There shall be no visible leakage anywhere in the system.

3.3 TESTING OF GRAVITY SEWER SYSTEMS

A. Testing: All structures required to be watertight and all piping and appurtenances shall be tested for leakage by CONTRACTOR under the direction of ENGINEER.

B. Sewer testing shall be done by air pressure test as specified herein.

1. Air Test: CONTRACTOR shall plug the pipe and shall conduct a low pressure air test to determine the acceptability of the completed WORK. CONTRACTOR shall furnish all men, materials, and supplies necessary to assist in the conducting of this

test. This air test shall conform to UNI-BB-6-79 or latest revision.

The air testing equipment shall be Air-Lock, as manufactured by Cherne Industrial, Inc., or approved equal. All air used shall pass through a single control panel. Individual air hoses shall be used from control panel to pneumatic plugs; from control panel to sealed line for introducing low pressure air; and from sealed line to control panel for continually monitoring the air pressure rise in the sealed line.

Pneumatic plugs shall have a sealing length equal to or greater than the diameter of the pipe tested. The plugs shall resist internal test pressures without requiring external bracing or blocking. Plugs shall be tested prior to installation in the pipe run. A joint of pipe shall be sealed at both ends with the plugs to be used in the sewer test. Air shall be introduced into the plugs to 25 psi. The sealed pipe shall then be pressurized to 9 psi. The plugs shall withstand this pressure without bracing or movement. The tested line segment shall be plugged and pressurized to 4.0 psi greater than the ground water back pressure but not to exceed 9 psi. The line shall be allowed to stabilize for 2 minutes after pressurization. After the pressure has stabilized, the air pressure shall be decreased slowly to 3.5 psi (greater than ground water back pressure) and the timing shall commence. The time for the pressure to drop 1 psi from 3.5 psi shall be recorded. The minimum acceptable time durations are shown on Table I. If the elapsed time to drop 1 psi is less than that shown on Table I, then the air loss shall be considered excessive and the section of pipe has failed the test.

TABLE 1

SPECIFICATION TIME REQUIRED FOR A 1.0 PSIG PRESSURE DROP

PART 1A

Pipe Diameter (in.)	Minimum Time (min:sec)	Length for Minimum Time (ft)	Time for Longer Length (sec)	Specification Time for Length (L) Shown (min:sec)			
				100'	150'	200'	250'
4	3:46	597	.380 L	3:46	3:46	3:46	3:46
6	5:40	398	.854 L	5:40	5:40	5:40	5:40
8	7:34	298	1.520 L	7:34	7:34	7:34	7:34
10	9:26	239	2.374 L	9:26	9:26	9:26	9:53
12	11:20	199	3.418 L	11:20	11:20	11:24	14:15
15	14:10	159	5.342 L	14:10	14:10	17:48	22:15
18	17:00	133	7.692 L	17:00	19:13	25:38	32:03
21	19:50	114	10.470 L	19:50	26:10	34:54	43:37
24	22:40	99	13.674 L	22:47	34:11	45:34	56:58
27	25:30	88	17.306 L	28:51	43:16	57:41	72:07
30	28:20	80	21.366 L	35:37	53:25	71:13	89:02
33	31:10	72	25.852 L	43:05	64:38	86:10	107:43
36	34:00	66	30.768 L	51:17	76:55	102:34	128:12

PART 1B

Pipe Diameter (in.)	Minimum Time (min:sec)	Length for Minimum Time (ft)	Time for Longer Length (sec)	Specification Time for Length (L) Shown (min:sec)			
				300'	350'	400'	450'
4	3:46	597	.380 L	3:46	3:46	3:46	3:46
6	5:40	398	.854 L	5:40	5:40	5:42	6:24
8	7:34	298	1.520 L	7:36	8:52	10:08	11:24
10	9:26	239	2.374 L	11:52	13:51	15:49	17:48
12	11:20	199	3.418 L	17:05	19:56	22:47	25:38
15	14:10	159	5.342 L	26:42	31:09	35:36	40:04
18	17:00	133	7.692 L	38:27	44:52	51:16	57:41
21	19:50	114	10.470 L	52:21	61:00	69:48	78:31
24	22:40	99	13.674 L	68:22	79:46	91:10	102:33
27	25:30	88	17.306 L	86:32	100:57	115:22	129:48
30	28:20	80	21.366 L	106:57	124:38	142:26	160:15
33	31:10	72	25.852 L	129:16	150:43	172:21	193:53
36	34:00	66	30.768 L	153:50	179:29	205:07	230:46

C. Testing of Manholes

All new and rehabilitated manholes shall be tested by vacuum testing.

1. Vacuum Test: Manholes shall be vacuum tested as follows:

All vacuum testing shall be performed prior to backfilling around all manholes.

All pipe openings shall be plugged by pneumatic or mechanical plugs and braced to sustain 10" mercury vacuum. The rim to cone joint shall be tested on all manholes. No one shall be inside the manhole during testing. The test shall be at 10 in. mercury.

Installation and operation of vacuum equipment and indicating devices shall be in accordance with equipment specifications for which performance information has been provided by the manufacturer.

Minimum Time to hold 1 in. Mercury Drop

MH Dia.	MH Height	Hg	Time (Minimum)
4'	10' or less	1 in.	1 min. 0 sec.
4'	10-15'	1 in.	1 min. 15 sec.
4'	15-25'	1 in.	1 min. 30 sec.

For manholes five feet in diameter, add an additional 15 seconds and for manholes six feet in diameter, add an additional 30 seconds to the time requirements for four-foot diameter manholes.

If a manhole joint mastic is completely pulled out during the vacuum test, the manhole shall be disassembled and the mastic replaced.

D. Deflection Test for PVC Gravity Pipe: All PVC pipe with a stiffness of 200 psi or greater may be excluded from the deflection test (Manufacturer shall certify stiffness in excess of 200 psi). Deflection tests shall be a test on installation and be performed no sooner that 30 days after final full backfill has been placed. The CONTRACTOR shall test the pipe for deflection by means of a GO-NO-GO mandrel to assure that a deflection of 5 percent has not been exceeded. The mandrel, one for each size pipe, shall be a nine arm mandrel, with proving ring, sized at 5 percent less than the ASTM dimension for the pipe in accordance with TABLE II.

The mandrel shall be pulled through the sewer line manually. Ten percent of all sewer line

shall be tested at locations specified by the ENGINEER. Should any of the 10% fail the test, it shall be corrected until it does pass the test, at the CONTRACTOR's expense. Additional sewer shall be tested at the discretion of the ENGINEER, and any sewer not passing the test shall be corrected until it does pass the test.

TABLE II

Nominal Diameter (inches)	L(inches)	PVC-SDR 35 ASTM D3034 D (inches)
8	8	7.50
10	10	9.33
12	12	11.16
15	15	13.60
18	18	16.60

L = Mandrel Arm Length
D = I.D. of Proving Ring

The test shall be made only under the supervision of the ENGINEER. The CONTRACTOR shall provide all equipment and perform all work required for the purposes. In case any section under test shows leakage in excess of the allowable amount, the CONTRACTOR shall make such repairs to the line as are required to bring the loss within the stipulated limits.

END OF SECTION

SECTION 02710
ASPHALT PAVING

PART 1 - GENERAL

1.1 RELATED DOCUMENTS

A. Drawings and general provisions of the Contract, including General and Supplementary Conditions and Division 01 Specification Sections, apply to this Section.

1.2 SUMMARY

A. Section Includes:

1. Cold milling of existing hot-mix asphalt pavement.
2. Hot-mix asphalt patching.
3. Hot-mix asphalt paving.
4. Hot-mix asphalt paving overlay.
5. Asphalt surface treatments.
6. Pavement-marking paint.

1.3 DEFINITION

A. Hot-Mix Asphalt Paving Terminology: Refer to ASTM D 8 for definitions of terms.

1.4 SUBMITTALS

A. Product Data: For each type of product indicated. Include technical data and tested physical and performance properties.

1. Job-Mix Designs: Certification, by authorities having jurisdiction, of approval of each job mix proposed for the Work.

2. Job-Mix Designs: For each job mix proposed for the Work.

B. Shop Drawings: Indicate pavement markings, lane separations, and defined parking spaces. Indicate, with international symbol of accessibility, spaces allocated for people with disabilities.

C. Qualification Data: For qualified manufacturer and Installer.

D. Material Certificates: For each paving material, from manufacturer.

E. Material Test Reports: For each paving material.

1.5 QUALITY ASSURANCE

A. Manufacturer Qualifications: A paving-mix manufacturer registered with and approved by VDOT.

B. Installer Qualifications: Imprinted-asphalt manufacturer's authorized installer who is trained and approved for installation of imprinted asphalt required for this Project.

C. Testing Agency Qualifications: Qualified according to ASTM D 3666 for testing indicated.

D. Regulatory Requirements: Comply with materials, workmanship, and other applicable requirements of the latest edition of the VDOT Road and Bridge Specifications for asphalt paving work.

1. Measurement and payment provisions and safety program submittals included in the VDOT Road and Bridge Specifications do not apply to this Section.

E. Preinstallation Conference: Conduct conference at Project site.

1. Review methods and procedures related to hot-mix asphalt paving including, but not limited to, the following:

a. Review proposed sources of paving materials, including capabilities and location of plant that will manufacture hot-mix asphalt.
b. Review condition of subgrade and preparatory work.
c. Review requirements for protecting paving work, including restriction of traffic during installation period and for remainder of construction period.
d. Review and finalize construction schedule and verify availability of materials, Installer's personnel, equipment, and facilities needed to make progress and avoid delays.

1.6 DELIVERY, STORAGE, AND HANDLING

A. Deliver pavement-marking materials to Project site in original packages with seals unbroken and bearing manufacturer's labels containing brand name and type of material, date of manufacture, and directions for storage.

B. Store pavement-marking materials in a clean, dry, protected location within temperature range required by manufacturer. Protect stored materials from direct sunlight.

1.7 PROJECT CONDITIONS

A. Environmental Limitations: Do not apply asphalt materials if subgrade is wet or excessively damp, if rain is imminent or expected before time required for adequate cure, or if the following conditions are not met:

1. Prime Coat: Minimum surface temperature of 60 deg F.
2. Slurry Coat: Comply with weather limitations in ASTM D 3910.
3. Asphalt Base Course: Minimum surface temperature of 40 deg F and rising at time of placement.

4. Asphalt Surface Course: Minimum surface temperature of 60 deg F at time of placement.

B. Pavement-Marking Paint: Proceed with pavement marking only on clean, dry surfaces and at a minimum ambient or surface temperature of 40 deg F for oil-based materials 55 deg F for water-based materials, and not exceeding 95 deg F.

PART 2 - PRODUCTS

2.1 AGGREGATES

A. General: Use materials and gradations that have performed satisfactorily in previous installations.

B. Coarse Aggregate: ASTM D 692, sound; angular crushed stone, crushed gravel, or cured, crushed blast-furnace slag.

C. Fine Aggregate: ASTM D 1073, sharp-edged natural sand or sand prepared from stone, gravel, cured blast-furnace slag, or combinations thereof.

1. For hot-mix asphalt, limit natural sand to a maximum of 20 percent by weight of the total aggregate mass.

2.2 ASPHALT MATERIALS

A. Asphalt Binder: AASHTO M 320 or AASHTO MP 1a.

B. Asphalt Cement: ASTM D 3381 for viscosity-graded material.

C. Prime Coat: Asphalt emulsion prime coat complying with VDOT Road and Bridge Specifications and requirements.

D. Water: Potable.

E. Undersealing Asphalt: ASTM D 3141, pumping consistency.

2.3 AUXILIARY MATERIALS

A. Herbicide: Commercial chemical for weed control, registered by the EPA. Provide in granular, liquid, or wettable powder form.

B. Sand: ASTM D 1073, Grade Nos. 2 or 3.

C. Paving Geotextile: AASHTO M 288, nonwoven polypropylene; resistant to chemical attack, rot, and mildew; and specifically designed for paving applications.

D. Pavement-Marking Paint: Latex, waterborne emulsion, lead and chromate free, ready mixed, complying with FS TT-P-1952, Type II, with drying time of less than 45 minutes and colors as designated on the plans.

E. Wheel Stops: Precast, air-entrained concrete, 2500-psi minimum compressive strength, 4-1/2 inches high by 9 inches wide by 72 inches long. Provide chamfered corners, drainage slots on underside, and holes for anchoring to substrate.

1. Dowels: Galvanized steel, 3/4-inch diameter, 10-inch minimum length.

2.4 MIXES

A. Hot-Mix Asphalt: Dense, hot-laid, hot-mix asphalt plant mixes approved by VDOT and complying with the following requirements:

1. Provide mixes with a history of satisfactory performance in geographical area where Project is located.

2. Base Course: BM-25.0A

3. Surface Course: SM-9.5A.

PART 3 - EXECUTION

3.1 EXAMINATION

A. Verify that subgrade is dry and in suitable condition to begin paving.

B. Proof-roll subgrade, under geotechnical inspector supervision, below pavements with heavy pneumatic-tired equipment to identify soft pockets and areas of excess yielding. Do not proof-roll wet or saturated subgrades.

1. Completely proof-roll subgrade in one direction. Limit vehicle speed to 3 mph.

2. Proof roll with a loaded 10-wheel, tandem-axle dump truck weighing not less than 15 tons.

3. Excavate soft spots, unsatisfactory soils, and areas of excessive pumping or rutting, as determined by Architect, and replace with compacted backfill or fill as directed.

C. Proceed with paving only after unsatisfactory conditions have been corrected.

D. Verify that utilities, traffic loop detectors, and other items requiring a cut and installation beneath the asphalt surface have been completed and that asphalt surface has been repaired flush with adjacent asphalt prior to beginning installation of imprinted asphalt.

3.2 COLD MILLING

A. Clean existing pavement surface of loose and deleterious material immediately before cold milling. Remove existing asphalt pavement by cold milling to grades and cross sections indicated.

1. Mill to a depth of 1-1/2 inches.

2. Mill to a uniform finished surface free of excessive gouges, grooves, and ridges.

3. Control rate of milling to prevent tearing of existing asphalt course.

4. Repair or replace curbs, manholes, and other construction damaged during cold milling.

5. Excavate and trim unbound-aggregate base course, if encountered, and keep material separate from milled hot-mix asphalt.

6. Transport milled hot-mix asphalt to asphalt recycling facility.

7. Keep milled pavement surface free of loose material and dust.

3.3 PATCHING

A. Hot-Mix Asphalt Pavement: Saw cut perimeter of patch and excavate existing pavement section to sound base. Excavate rectangular or trapezoidal patches, extending 12 inches into adjacent sound pavement, unless otherwise indicated. Cut excavation faces vertically. Remove excavated material. Recompact existing unbound-aggregate base course to form new subgrade.

B. Patching: Fill excavated pavements with hot-mix asphalt base mix for full thickness of patch and, while still hot, compact flush with adjacent surface.

3.4 SURFACE PREPARATION

A. General: Immediately before placing asphalt materials, remove loose and deleterious material from substrate surfaces. Ensure that prepared subgrade is ready to receive paving.

B. Herbicide Treatment: Apply herbicide according to manufacturer's recommended rates and written application instructions. Apply to dry, prepared subgrade or surface of compacted-aggregate base before applying paving materials.

1. Mix herbicide with prime coat if formulated by manufacturer for that purpose.

C. Prime Coat: Apply uniformly over surface of compacted unbound-aggregate base course at a rate of 0.15 to 0.50 gal./sq. yd. Apply enough material to penetrate and seal but not flood surface. Allow prime coat to cure.

1. If prime coat is not entirely absorbed within 24 hours after application, spread sand over surface to blot excess asphalt. Use enough sand to prevent pickup under traffic. Remove loose sand by sweeping before pavement is placed and after volatiles have evaporated.

2. Protect primed substrate from damage until ready to receive paving.

3.5 HOT-MIX ASPHALT PLACING

A. Machine place hot-mix asphalt on prepared surface, spread uniformly, and strike off. Place asphalt mix by hand to areas inaccessible to equipment in a manner that prevents segregation of mix. Place each course to required grade, cross section, and thickness when compacted.

1. Place hot-mix asphalt base course in number of lifts and thicknesses indicated.

2. Place hot-mix asphalt surface course in single lift.

3. Spread mix at minimum temperature of 250 deg F.

4. Begin applying mix along centerline of crown for crowned sections and on high side of one-way slopes unless otherwise indicated.

5. Regulate paver machine speed to obtain smooth, continuous surface free of pulls and tears in asphalt-paving mat.

B. Place paving in consecutive strips not less than 10 feet wide unless infill edge strips of a lesser width are required.

1. After first strip has been placed and rolled, place succeeding strips and extend rolling to overlap previous strips. Complete a section of asphalt base course before placing asphalt surface course.

C. Promptly correct surface irregularities in paving course behind paver. Use suitable hand tools to remove excess material forming high spots. Fill depressions with hot-mix asphalt to prevent segregation of mix; use suitable hand tools to smooth surface.

3.6 JOINTS

A. Construct joints to ensure a continuous bond between adjoining paving sections. Construct joints free of depressions, with same texture and smoothness as other sections of hot-mix asphalt course.

1. Clean contact surfaces and apply tack coat to joints.

2. Offset longitudinal joints, in successive courses, a minimum of 6 inches.

3. Offset transverse joints, in successive courses, a minimum of 24 inches.

4. Construct transverse joints at each point where paver ends a day's work and resumes work at a subsequent time. Compact joints as soon as hot-mix asphalt will bear roller weight without excessive displacement.

5. Compact asphalt at joints to a density within 2 percent of specified course density.

3.7 COMPACTION

A. General: Begin compaction as soon as placed hot-mix paving will bear roller weight without excessive displacement. Compact hot-mix paving with hot, hand tampers or with vibratory-plate compactors in areas inaccessible to rollers.

1. Complete compaction before mix temperature cools to 185 deg F.

B. Breakdown Rolling: Complete breakdown or initial rolling immediately after rolling joints and outside edge. Examine surface immediately after breakdown rolling for indicated crown, grade, and smoothness. Correct laydown and rolling operations to comply with requirements.

C. Intermediate Rolling: Begin intermediate rolling immediately after breakdown rolling while hot-mix asphalt is still hot enough to achieve specified density. Continue rolling until hot-mix asphalt course has been uniformly compacted to the following density:

1. Average Density: 96 percent of reference laboratory density according to ASTM D 6927, but not less than 94 percent nor greater than 100 percent.

2. Average Density: 92 percent of reference maximum theoretical density according to ASTM D 2041, but not less than 90 percent nor greater than 96 percent.

D. Finish Rolling: Finish roll paved surfaces to remove roller marks while hot-mix asphalt is still warm.

E. Edge Shaping: While surface is being compacted and finished, trim edges of pavement to proper alignment. Bevel edges while asphalt is still hot; compact thoroughly.

F. Repairs: Remove paved areas that are defective or contaminated with foreign materials and replace with fresh, hot-mix asphalt. Compact by rolling to specified density and surface smoothness.

G. Protection: After final rolling, do not permit vehicular traffic on pavement until it has cooled and hardened.

H. Erect barricades to protect paving from traffic until mixture has cooled enough not to become marked.

3.8 INSTALLATION TOLERANCES

A. Pavement Thickness: Compact each course to produce the thickness indicated within the following tolerances:

1. Base Course: Plus 1/2 inch, no minus.
2. Surface Course: Plus 1/4 inch, no minus.

B. Pavement Surface Smoothness: Compact each course to produce a surface smoothness within the following tolerances as determined by using a 10-foot straightedge applied transversely or longitudinally to paved areas:

1. Base Course: 1/8 inch.
2. Surface Course: 1/8 inch.
3. Crowned Surfaces: Test with crowned template centered and at right angle to crown. Maximum allowable variance from template is 1/4 inch.

3.9 PAVEMENT MARKING

A. Do not apply pavement-marking paint until layout, colors, and placement have been verified with Engineer.

B. Allow paving to age for 30 days before starting pavement marking.

C. Sweep and clean surface to eliminate loose material and dust.

D. Apply paint with mechanical equipment to produce pavement markings, of dimensions indicated, with uniform, straight edges. Apply at manufacturer's recommended rates to provide a minimum wet film thickness of 15 mils.

3.10 WHEEL STOPS

A. Securely attach wheel stops to pavement with not less than two galvanized-steel dowels embedded at one-quarter to one-third points. Securely install dowels into pavement and bond to wheel stop. Recess head of dowel beneath top of wheel stop.

3.11 FIELD QUALITY CONTROL

A. Testing Agency: CONTRACTOR shall engage a qualified Testing Agency to perform tests and inspections.

B. Thickness: In-place compacted thickness of hot-mix asphalt courses will be determined according to ASTM D 3549.

C. Surface Smoothness: Finished surface of each hot-mix asphalt course will be tested for compliance with smoothness tolerances.

D. In-Place Density: Testing agency will take samples of uncompacted paving mixtures and compacted pavement according to ASTM D 979.

1. Reference maximum theoretical density will be determined by averaging results from four samples of hot-mix asphalt-paving mixture delivered daily to site, prepared according to ASTM D 2041, and compacted according to job-mix specifications.

2. In-place density of compacted pavement will be determined by testing core samples according to ASTM D 1188 or ASTM D 2726.

a. One core sample will be taken for every 1000 sq. yd. or less of installed pavement, with no fewer than 3 cores taken.

b. Field density of in-place compacted pavement may also be determined by nuclear method according to ASTM D 2950 and correlated with ASTM D 1188 or ASTM D 2726.

E. Replace and compact hot-mix asphalt where core tests were taken.

F. Remove and replace or install additional hot-mix asphalt where test results or measurements indicate that it does not comply with specified requirements.

3.12 DISPOSAL

A. Except for material indicated to be recycled, remove excavated materials from Project site and legally dispose of them in an EPA-approved landfill.

1. Do not allow milled materials to accumulate on-site.

END OF SECTION

SECTION 02798
UTILITY LOCATION AND IDENTIFICATION

PART 1 - GENERAL

1.1 SUMMARY

The purpose of this Section is to specify the requirements for utility location tape, tracer wire, and test stations. In general, all utility pipelines shall be marked by appropriately marked metallic tape 12 inches below finished grade above the conduit.

1.2 RELATED SECTIONS

Intent: The provisions and intent of the AGREEMENT, including the General Conditions, Supplemental Conditions, and other requirements of the Contract Documents apply to the WORK as specified in this Section. WORK related to this Section is described throughout the Specifications.

1.3 REFERENCES

Code of Virginia

1.4 SUBMITTALS

Shop Drawings shall be submitted for all products specified in this Section as outlined in Division 1.

1.5 SEQUENCING

The tape shall be installed at the same time as the pipeline.

PART 2 - PRODUCTS

2.1 TRACING WIRE SYSTEM

A. Wire Types

1. Wire shall be #12, stranded, type THHN, thermoplastic insulated and nylon jacketed. Wire shall be color coded blue for water and green for sewer.

B. Acceptable Wire Connectors:

1. Set screw pressure type for use with #12 stranded wire size. Holub Industries MA-2, Ideal Industries Model 30-222, or equal.
2. C-Tap for two way splicing of tracer wire, for use with #12 stranded wire size. T&B #54705 or equal.
3. Split bolts, three wire type for splicing of tracer wire, for use with #12 stranded wire size. ILSCO Catalog #SEL-2S or equal.
4. Wire nuts are not permitted underground

C. Test Station Box – Test station boxes shall be a minimum of 18 inches tall with cast iron lid

and collar and plastic body tube with flared bottom to prevent settling and pull-out. Cast iron collar shall be a minimum of 2 inches deep. Lid shall be bolted to collar with brass bolt. Lid shall be imprinted with the wording "TEST". Test Station Box shall be Bingham & Taylor Figure Number P-200 Test, 2-1/2 inches in size.

1. Electric Tap – vinyl electric tape.

2. Electrical Coating 0- Scotchkote 3M electrical coating Part No. 054007 or equal.

3. Wire nut – non-conductive for #12 stranded wire size.

2.2 WARNING AND IDENTIFICATION TAPE

A. Polyethylene plastic and metallic core or metallic-faced, acid-and alkali-resistant, polyethylene plastic warning tape manufactured specifically for warning and identification of buried utility lines. Provide tape on rolls, 2-inch minimum width, color coded as specified below for the intended utility with warning and identification imprinted in bold black letters continuously over the entire tape length. Warning and identification to read, "CAUTION, BURIED (intended service) LINE BELOW" or similar wording. Color and printing shall be permanent, unaffected by moisture or soil.

Warning Tape Color Codes

Yellow:	Gas, Oil, and Dangerous Materials
Blue:	Water
Green:	Sewer

B. Warning Tape for Metallic Piping: Acid and alkali-resistant polyethylene plastic tape conforming to the width, color, and printing requirements specified above. Minimum thickness of tape shall be 0.003 inch. Tape shall have a minimum strength of 1500 psi otherwise, and 1250 psi crosswise, with a maximum 350 percent elongation.

C. Detectable Warning Tape for Non-Metallic Piping: Polyethylene plastic tape conforming to the width, color, and printing requirements specified above. Minimum thickness of the tape shall be 0.004 inch. Tape shall have a minimum strength of 1500 psi lengthwise and 1250 psi crosswise. Tape shall be manufactured with integral wires, foil backing, or other means of enabling detection by a metal detector when tape is buried up to 3 feet deep. Encase metallic element of the tape in a protective jacket or provide with other means of corrosion protection. Color coded tape shall be installed flat with color side up 12 inches to 24 inches over all installed utility lines including main line and service lateral or service connection.

END OF SECTION

SECTION 02821
CHAIN LINK FENCE AND GATES

PART 1 - GENERAL

1.1 SUMMARY

A. Contractor shall furnish and install chain link fence as indicated on the Contract Documents and specified herein.

1.2 DESCRIPTION

A. This Section includes materials applicable for commercial/industrial and security chain link fence and gates.

1. Galvanized steel coated chain link fabric
2. Polymer coated steel chain link fabric
3. Galvanized steel framework and fittings
4. Polymer coated galvanized steel framework and fittings
5. Gates: swing and cantilever slide
6. Barbed wire
7. Installation

1.3 REFERENCES

A. ASTM A121 Specification for Metallic-Coated Carbon Steel Barbed Wire B. ASTM A392 Specification for Zinc-Coated Steel Chain-Link Fence Fabric C. ASTM A491 Specification for Aluminum-Coated Steel Chain-Link Fabric

B. ASTM A780 Standard Practice for Repair of Damaged and Uncoated Areas of Hot- Dip Galvanized Coatings

C. ASTM A824 Specification for Metallic-Coated Steel Marcelled Tension Wire for Use With Chain Link

D. ASTM F552 Standard Terminology Relating to Chain Link Fencing G. ASTM F567 Standard Practice for Installation of Chain Link Fence H. ASTM F626 Specification for Fence Fittings

E. ASTM F668 Specification for Polymer Coated Chain Link Fence Fabric

F. ASTM F900 Specification for Industrial and Commercial Swing Gates

G. ASTM F934 Specification for Standard Colors for Polymer-Coated Chain Link

H. ASTM F1043 Specification for Strength and Protective Coatings of Metal Industrial Chain Link Fence Framework

I. ASTM F1083 Specification for Pipe, Steel, Hot-Dipped Zinc-Coated (Galvanized) Welded, for Fence Structures

J. ASTM F1184 Specification for Industrial and Commercial Horizontal Slide Gates

K. ASTM F1664 Specification for Poly (Vinyl Chloride) (PVC) and Other Conforming Organic Polymer-Coated Steel Tension Wire Used with Chain-Link Fence

L. ASTM F1665 Specification for Poly (Vinyl Chloride) (PVC) and Other Conforming Organic Polymer-Coated Steel Barbed Wire Used with Chain-Link Fence

M. ASTM F1910 Specification for Long Barbed Tape Obstacles

N. ASTM F1911 Standard Practice for Installation of Barbed Tape

O. ASTM F2200 Specification for Automated Vehicular Gate Construction

P. CLFMI SFR2445, Security Fence Recommendations

Q. CLFMI WLG2445, Chain Link Fence Wind Load Guide for the Selection of Line Post and Line Post Spacing

R. Federal Specification RR-F-191/3E Fencing, Wire and Post, Metal (Chain–LinkFence Posts, Top Rails and Braces)

S. UL 325 Door, Drapery, Gate, Louver and Window Operators

1.4 SUBMITTALS

A. Submittals shall be in accordance with Division 1.

B. Shop drawings: Site plan showing layout of fence location with dimensions, location of gates and opening size, cleared area, elevation of fence and gates, details of attachments and footings.

C. Certifications: Manufacturers material certifications in compliance with current ASTM specifications.

D. Domestic certifications: Material certifications, Made in U.S.A., Buy American Act or Buy America when required.

E. Specification Changes: May not be made after the date of bid.

1.5 QUALITY ASSURANCE

A. Qualifications

1. Manufacturer's Qualifications:

a. The equipment manufacturer shall modify their standard equipment to meet the minimum values specified for dimensions, design, and the intent of this specification.

b. Manufacturers regularly engaged in the manufacture of the equipment as specified herein and who can demonstrate equipment of this specified design, in actual service for a period of not less than 5 years will be considered as acceptable manufacturers.

c. Manufacturers shall show evidence of quality assurance in manufacturing and supplying equipment essential in details to the equipment herein specified.

d. Tolerances: Current published edition of ASTM specifications tolerances apply. ASTM specification tolerances supersede any conflicting tolerance.

2. Component Supply and Compatibility:

a. Obtain all equipment included in this Section, regardless of the component manufacturer, from the equipment supplier for sole source responsibility.

b. The equipment supplier to review and approve or prepare all Shop Drawings and other submittals for all components furnished under this Section.

1.6 DELIVERY, STORAGE, AND HANDLING

A. Packing, Shipping, Handling, and Unloading

1. Deliver materials to the Site to ensure uninterrupted progress of the Work. Deliver anchor bolts and anchorage devices, which are to be embedded in cast-in-place concrete in ample time to prevent delay of that Work.

B. Acceptance at Site

1. All boxes, crates, and packages shall be inspected by Contractor upon delivery to the Site. Contractor shall notify Engineer, in writing, if any loss or damage exists to equipment or components. Replace loss and repair damage to new condition in accordance with manufacturer's instructions.

C. Storage and Protection

1. Store materials to permit easy access for inspection and identification. Keep all material off the ground, using pallets, platforms, or other supports. Protect steel members and packaged materials from corrosion and deterioration.

2. Store all equipment in covered storage off the ground and prevent condensation and in accordance with the manufacturer's recommendations for long-term storage.

1.7 WARRANTY

A. Warranty shall be in accordance with Division 1.

B. Any such defects, which occur within the stipulated warranty period, shall be repaired, replaced, or made good at no cost to the Owner.

PART 2 - PRODUCTS

2.1 CHAIN LINK FABRIC

A. Steel chain link fabric shall be 2 inch mesh, 9 gauge wire, black vinyl coated, height as indicated on the Contract Plans, with top and bottom selvage twisted in accordance with the following:

1. Zinc-Coated Steel Fabric: ASTM A392 hot dip galvanized before or after weaving.

a. Class 2 - 2.0 oz/ft^2

2. Polymer Coated Steel Fabric: ASTM F668, wire gauge shall be 9 gauge wire before coating is applied.

a. Class 2b, fused and adhered

3. Color to be chosen by owner in compliance with ASTM F934.

4. Fabric selvage

a. Fabric selvage shall be twisted top and bottom, T&T

2.2 STEEL FENCE FRAMEWORK

A. Round steel pipe and rail: ASTM F1043 Group IA Heavy Industrial Fence Framework, schedule 40 galvanized pipe per ASTM F1083. Exterior zinc coating Type A, interior zinc coating Type A, Regular Grade.

1. Line posts shall be 2 7/8 inches outside diameter weighing 5.80 lbs/ft.

2. End, Corner, Pull post shall be 3 1/2 inches outside diameter weighing 7.58 lbs/ft.

3. 3. Top rail and brace rails shall be 1 5/8 inches outside diameter 2.27 lbs/ft.

B. Polymer Coated Framework: Polymer coated framework shall have a PVC coating fused and adhered to the exterior zinc coating of the post or rail. PVC shall have minimum thickness 10-mils per ASTM F1043. Color to match chain link fabric per ASTM F934.

2.3 TENSION WIRE

A. Metallic Coated Steel Marcelled Tension Wire: 7 gauge (0.177 in.) marcelled wire complying with ASTM A824. Match coating type to that of the chain link fabric.

1. Type II Zinc coated class 5 2.0 oz/square ft

B. Polymer Coated Steel Tension Wire: 7 gauge (0.177 in.) (4.50 mm) wire complying with ASTM F1664. Wire gauge specified is the core wire gauge. Match coating class and color to that of the chain link fabric.

1. Class 2b, fused and adhered

2.4 BARBED WIRE

A. Metallic Coated Steel Barbed Wire: Comply with ASTM A121, Design Number12-4-5-14R, double 12-½ gauge (0.099 in.) twisted strand wire, with 4 point 14 gauge (0.080 in.) round barbs spaced 5 inches on center. Match coating type to that of the chain link fabric.

1. Coating Type Z - Zinc-coated: Strand wire coating Type Z, Class 3, 0.80 oz/ft.

B. Polymer Coated Barbed Wire: Comply with ASTM F1665, 0.80 in double twisted strand wire; zinc coated four point, 14 gauge (0.080 in.) barbs spaced 5 inches on center

1. Coating shall be Class 2b fused and adhered.

2.5 FITTINGS

A. Tension and Brace Bands: Galvanized pressed steel complying with ASTM F626, minimum steel thickness of 12 gauge (0.105 in.) minimum width of 3/4 in. and minimum zinc coating of 1.20 oz/ft². Bands shall be supplied with 3/8 in. galvanized steel carriage bolts.

B. Terminal Post Caps, Line Post Loop Tops, Rail and Brace Ends, Boulevard Clamps, Rail Sleeves: In compliance to ASTM F626, pressed steel galvanized after fabrication having a minimum zinc coating of 1.20 oz/ft².

C. Truss Rod Assembly: In compliance with ASTM F626, 3/8 in. diameter steel truss rod with a pressed steel tightener, minimum zinc coating of 1.2 oz/ft², assembly capable of withstanding a tension of 2,000 lbs.

D. Tension Bars: In compliance with ASTM F626. Galvanized steel one-piece length 2 in. less than the fabric height. Minimum zinc coating 1.2 oz. /ft². Bars for 2 in. and 1 ¾ in. mesh shall have a minimum cross section of 3/16 in. by 3/4 in..

E. Barbed Wire Arms: In compliance with ASTM F626, pressed steel galvanized after fabrication, minimum zinc coating of 1.20 oz. /ft², capable of supporting a vertical 250 lb load. Arms shall be type I, three strand 45 degree.

F. Polymer Coated Color Fittings: In compliance with ASTM F626. Polymer coating minimum thickness 0.006 in. fused and adhered to zinc coated fittings. Match color to fence system.

2.6 TIE WIRE and HOG RINGS

A. Tie Wire and Hog Rings: Galvanized minimum zinc coating 1.20 oz/ft² 9 gauge (0.148) steel wire in compliance with ASTM F626. For PVC coated; match the coating, class and color to that of the chain link fabric.

2.7 SWING GATES

A. Swing gate opening size shall be as indicated on the Contract Plans. Galvanized steel welded fabrication shall be in accordance with ASTM F900. Gate frame member shall be 1.90 inch OD in accordance with ASTM F 1043 Group 1A F1083. Schedule 40 pipe.

B. Frame members shall be spaced no greater than 8 feet apart vertically and horizontally. Welded joints shall be protected by applying zinc-rich paint in accordance with ASTM Practice A780.

C. Positive locking gate latch shall be fabricated of 5/16 inch thick by 1 3/4 inch pressed steel galvanized after fabrication.

D. Hinges shall be galvanized malleable iron or heavy gauge galvanized pressed steel post and frame hinges.

E. Fabric shall match fence fabric

F. Gateposts

1. Gate posts shall be 4.5" OD, 10.80 lb/ft ASTM F1043 Group IA ASTM F1083 schedule 40 pipe. Polymer coated gate frames and gateposts; match the coating type and color to that specified for the fence framework. Moveable parts such as hinges, latches and drop rods may be field coated using a liquid polymer touch up.

2.8 CONCRETE

A. Concrete for post footings shall have a 28-day compressive strength of 3000 psi.

PART 3 - EXECUTION

3.1 CLEARING FENCE LINE

A. Contractor shall clear grub grade and remove debris for the fence line as required for the fence installation. The contract drawings indicate the extent of the area to be cleared and grubbed.

3.2 FRAMEWORK INSTALLATION

A. Posts: Posts shall be set plumb in concrete footings in accordance with ASTM F567. Minimum footing depth shall be as indicated on the Contract Plans. Top of post concrete footing to be 2 inches above grade and crowned to shed water away from the post. Line posts shall be installed at intervals not exceeding 10 ft. on center.

B. Top rail posts shall be installed in 21 ft. lengths of rail continuous thru the line post or barb arm loop top. Splice rail using top rail sleeves minimum 6 in. The rail shall be secured to the terminal post by a brace band and rail end. Intermediate rail shall be field cut and secured to the line posts using boulevard bands or rail ends and brace bands.

C. Terminal posts: End, corner, pull and gate posts shall be braced and trussed for fence 6 ft. and higher and for fences 5 ft. in height not having a top rail. The horizontal brace rail and diagonal truss rods shall be installed in accordance with ASTM F567.

D. Tension wire: Shall be installed 4 in. up from the bottom of the fabric. Tension wire to be stretched taut, independently and prior to the fabric, between the terminal posts and secured to the terminal post using a brace band. Secure the tension wire to the chain link fabric with 9 gauge hog rings 18 in. on center and to each line post with a tie wire.

3.3 CHAIN LINK FABRIC INSTALLATION

A. Chain Link Fabric shall be installed to outside of the framework. Attach fabric to the terminal post by threading the tension bar through the fabric; secure the tension bar to the terminal post with tension bands and 5/16 in. carriage bolts spaced no greater than 12 inches on center. Chain link fabric to be stretched taut free of sag. Fabric to be secured to the line post with tie wires spaced no greater than 12 inches on center and to the top rail spaced no greater than18 inches on center. Secure fabric to the tension wire with hog rings spaced no greater than 18 inches apart.

1. Tie wire shall be wrapped around the post or rail and attached to the fabric wire picket on each side by twisting the tie wire around the fabric wire picket two full turns.

OR

2. Tie wire shall be wrapped 360 degrees around the post or rail and the two ends twisted together three full turns.

3. Excess wire shall be cut off and bent over to prevent injury. The installed fabric shall have a ground clearance on no more than 2 inches.

3.4 BARBED WIRE INSTALLATION

Barbed Wire: Stretched taut between terminal posts and secured in the slots provided on the line post barb arms. Attach each strand of barbed wire to the terminal post using a brace band.

3.5 GATE INSTALLATION

A. Swing Gates: Installation of swing gates and gateposts in compliance with ASTM F567. Direction of swing shall be as indicated on the Contract Plans. Gates shall be plumb in the closed position having a bottom clearance of 3 in. grade permitting. Hinge and latch offset opening space from the gate frame to the post shall be no greater than 3 in. in the closed position. Double gate drop bar receivers shall be set in a concrete footing minimum 12 in. diameter 36 in. deep. Gate leaf holdbacks shall be installed for all double gates. Gate leaf hold backs shall be installed in concrete footings minimum 12" in diameter and 36" deep.

3.6 NUTS AND BOLTS

Bolts: Carriage bolts and nuts used for fittings shall be hot dipped galvanized and installed

with the head on the outside of the fence. All bolts shall be peened over to prevent removal of the nut. Nut threads shall be over sized to allow for galvanizing.

3.7 CLEAN UP

Clean Up: The area of the fence line shall be left neat and free of any debris caused by the installation of the fence.

END OF SECTION

SECTION 02920
TURF AND GRASSES

PART 1- GENERAL

1.1 RELATED DOCUMENTS

A. Drawings and general provisions of the Contract, including General and Supplementary Conditions and Division 01 Specification Sections, apply to this Section.

1.2 SUMMARY

A. This section includes the following:

1. Seeding.
2. Hydroseeding.
3. Sodding.
4. Plugging.
5. Sprigging.
6. In some parts of the U.S., meadows may be called "prairies." If needed for clarity, revise the term "meadow" throughout the Section Text or insert a definition.
7. Erosion-control material(s).
8. Grass paving.

1.3 DEFINITIONS

A. Duff Layer: The surface layer of native topsoil that is composed of mostly decayed leaves, twigs, and detritus.

B. Finish Grade: Elevation of finished surface of planting soil.

C. Manufactured Topsoil: Soil produced off-site by homogeneously blending mineral soils or sand with stabilized organic soil amendments to produce topsoil or planting soil.

D. Pesticide: A substance or mixture intended for preventing, destroying, repelling, or mitigating a pest. This includes insecticides, miticides, herbicides, fungicides, rodenticides, and molluscicides. It also includes substances or mixtures intended for use as a plant regulator, defoliant, or desiccant.

E. Pests: Living organisms that occur where they are not desired or that cause damage to plants, animals, or people. These include insects, mites, grubs, mollusks (snails and slugs), rodents (gophers, moles, and mice), unwanted plants (weeds), fungi, bacteria, and

viruses.

F. Planting Soil: Standardized topsoil; existing, native surface topsoil; existing, in-place surface soil; imported topsoil; or manufactured topsoil that is modified with soil amendments and perhaps fertilizers to produce a soil mixture best for plant growth.

G. Subgrade: Surface or elevation of subsoil remaining after excavation is complete, or top surface of a fill or backfill before planting soil is placed.

H. Subsoil: All soil beneath the topsoil layer of the soil profile, and typified by the lack of organic matter and soil organisms.

I. Surface Soil: Soil that is present at the top layer of the existing soil profile at the Project site. In undisturbed areas, the surface soil is typically topsoil, but in disturbed areas such as urban environments, the surface soil can be subsoil.

1.4 QUALITY ASSURANCE

A. Installer qualifications: A qualified landscape installer whose work has resulted in successful sodded lawn installations.

B. Soil-Testing Laboratory Qualifications: An independent laboratory or university laboratory, recognized by the State Department of Agriculture, with the experience and capability to conduct the testing indicated and that specializes in types of tests to be performed.

C. Pre-installation Conference: Conduct conference at Project site to comply with requirements in Division 1 Section "Project Management and Coordination."

1.5 DELIVERY, STORAGE, AND HANDLING

A. Seed and Other Packaged Materials: Deliver packaged materials in original, unopened containers showing weight, certified analysis, name and address of manufacturer, and indication of conformance with state and federal laws, as applicable.

B. Sod: Harvest, deliver, store, and handle sod according to requirements in "Specifications for Turfgrass Sod Materials" and "Specifications for Turfgrass Sod Transplanting and Installation" in TPI's "Guideline Specifications to Turfgrass Sodding." Deliver sod in time for planting within 24 hours of harvesting. Protect sod from breakage and drying.

C. Bulk Materials:

1. Do not dump or store bulk materials near structures, utilities, walkways and pavements, or on existing turf areas or plants.

2. Provide erosion-control measures to prevent erosion or displacement of bulk materials, discharge of soil-bearing water runoff, and airborne dust reaching adjacent properties, water conveyance systems, or walkways.

1.6 SCHEDULING

A. Weather Limitations: Proceed with planting only when existing and forecasted weather conditions permit.

1.7 LAWN MAINTENANCE

A. Initial Turf Maintenance Service: Provide full maintenance by skilled employees of landscape Installer. Maintain as required in Part 3. Begin maintenance immediately after each area is planted and continue until acceptable turf is established but for not less than the following periods:

1. Seeded Turf: 60 days from date of Substantial Completion.
   a. When initial maintenance period has not elapsed before end of planting season, or if turf is not fully established, continue maintenance during next planting season.
2. Sodded Turf: 30 days from date of Substantial Completion.
3. Plugged Turf: 30 days from date of Substantial Completion.
4. Sprigged Turf: 30 days from date of Substantial Completion.

B. Maintain and establish lawn by watering, fertilizing, weeding, mowing, trimming, re-planting, and other operations. Roll, regrade, and replant bare or eroded areas and rem-ulch to produce a uniformly smooth lawn:

1. In areas where mulch has been disturbed by wind or maintenance operations, add new mulch. Anchor as required to prevent displacement.

C. Mow lawn as soon as top growth is tall enough to cut. Repeat mowing to maintain specified height without cutting more than 40 percent of grass height. Remove no more than 40 percent of grass-leaf growth in initial or subsequent mowings. Do not delay mowing until grass blades bend over and become matted. Do not mow when grass is wet. Schedule initial and subsequent mowings to maintain the following grass heights.

1. Mow grass 2 to 3 inches (50 to 75 mm) high.

D. Lawn Postfertilization: Apply fertilizer after initial mowing and when grass is dry.

1. Use fertilizer and application rates recommended in Topsoil Analysis.

1.8 MAINTENACE SERVICE

A. Lawns: Sixty days from date of Substantial Completion.

PART 2- PRODUCTS

2.1 SEED

A. Grass Seed: Fresh, clean, dry, new-crop seed complying with AOSA's "Journal of Seed Technology; Rules for Testing Seeds" for purity and germination tolerances.

B. Retain one of first two paragraphs below if specifying grass seed and mixes by species. Retain first paragraph if grass seed is certified by the State Department of Agriculture. Most states have seed-certification agencies. Retain second paragraph if the State Department of Agriculture does not regulate seed germination, purity, and weed seed or if there is no state seed certification. Delete both paragraphs if specifying proprietary grass seed mixes.

C. Seed Species: State-certified seed of grass species as follows:

D. Seed Species: Seed of grass species as follows, with not less than 95 percent germination, not less than 85 percent pure seed, and not more than 0.5 percent weed seed:

1. Full Sun to Partial Shade: Proportioned by weight as follows:

   a. 75 percent Tall Fescue (Festuca arundinacea) varieties, including Jaguar, Mustang, Rebel II, or Olympic.
   b. 15 percent Kentucky Bluegrass (Poa pratensis) varieties, including Medit and South Dakota.
   c. 10 percent Perennial Ryegrass (Lolium perenne).

2. Shade: Proportioned by weight as follows:

   a. 50 percent Chewings red fescue (Festuca rubra spp rubra).
   b. 35 percent Rough Bluegrass (Poa trivialis).
   c. 15 percent redtop (Agrostis alba).

2.2 TURFGRASS SOD

A. Turfgrass Sod: Number 1 Quality/Premium, including limitations on thatch, weeds, diseases, nematodes, and insects, complying with TPI's "Specifications for Turfgrass Sod Materials" in its "Guideline Specifications to Turfgrass Sodding." Furnish viable sod of uniform density, color, and texture, strongly rooted, and capable of vigorous growth and development when planted. Sod shall be from a reputable local dealer.

B. Turfgrass Species: Sod of grass species as follows, with not less than 95 percent germination, not less than 85 percent pure seed, and not more than 0.5 percent weed seed:

1. Full Sun to Shade:

   a. 90 percent Tall Fescue (Festuca arundinacea).
   b. 10 percent Kentucky bluegrass (Poa pratensis).

2.3 INORGANIC SOIL AMENDMENTS

A. Inorganic Soil Amendments: Lime, sulfur, iron sulfate, aluminum sulfate, perlite, agricultural gypsum, sand, diatomaceous earth, and zeolite.

2.4 ORGANIC SOIL AMENDMENTS

A. Compost: Well-composted, stable, and weed-free organic matter, pH range of 5.5 to 8; moisture content 35 to 55 percent by weight; 100 percent passing through 3/4-inch sieve; soluble salt content of 5 to 10 decisiemens/m; not exceeding 0.5 percent inert contaminants and free of substances toxic to plantings; and as follows:

1. Organic Matter Content: 50 to 60 percent of dry weight.

2.5 FERTILIZER

A. Fertilizers: Bonemeal and slow-release fertilizer.

2.6 PLANTING SOILS

A. Planting Soil: Existing, in-place surface soil. Verify suitability of existing surface soil to produce viable planting soil. Remove stones, roots, plants, sod, clods, clay lumps, pockets of coarse sand, concrete slurry, concrete layers or chunks, cement, plaster, building debris, and other extraneous materials harmful to plant growth. Mix surface soil with the following soil amendments per the soils test and recommendations. Use the following amendment materials:

B. Ratio of Loose Compost to Surface Soil by Volume:

C. Ratio of Loose Sphagnum Peat to Surface Soil by Volume:

D. Ratio of Loose Wood Derivatives to Surface Soil by Volume:

E. Weight of Lime per 1000 Sq. Ft..

F. Weight of Sulfur or Iron Sulfate or Aluminum Sulfate per 1000 Sq. Ft..

G. Weight of Agricultural Gypsum per 1000 Sq. Ft..

H. Volume of Sand Plus 10 Percent Diatomaceous Earth or Zeolites per 1000 Sq. Ft..

I. Weight of Bonemeal per 1000 Sq. Ft..

J. Weight of Superphosphate per 1000 Sq. Ft..

K. Weight of Commercial Fertilizer per 1000 Sq. Ft..

L. Weight of Slow-Release Fertilizer per 1000 Sq. Ft..

2.7 MULCHES

A. Mulches: Straw and tackifier for hydroseeded areas.

2.8 PESTICIDES

A. General: Pesticide, registered and approved by EPA, acceptable to authorities having jurisdiction, and of type recommended by manufacturer for each specific problem and as required for Project conditions and application. Do not use restricted pesticides unless authorized in writing by authorities having jurisdiction.

B. Pre-Emergent Herbicide (Selective and Non-Selective): Effective for controlling the germination or growth of weeds within planted areas at the soil level directly below the mulch layer.

C. Post-Emergent Herbicide (Selective and Non-Selective): Effective for controlling weed growth that has already germinated.

2.9 EROSION-CONTROL MATERIALS

A. Erosion-Control Blankets: Biodegradable wood excelsior, straw, or coconut-fiber mat enclosed in a photodegradable plastic mesh. Include manufacturer's recommended steel wire staples, 6 inches long.

B. Erosion-Control Fiber Mesh: Biodegradable burlap or spun-coir mesh, a minimum of 0.92 lb/sq. yd., with 50 to 65 percent open area. Include manufacturer's recommended steel wire staples, 6 inches long.

C. Erosion-Control Mats: Cellular, non-biodegradable slope-stabilization mats designed to isolate and contain small areas of soil over steeply sloped surface, of 3-inch nominal mat thickness. Include manufacturer's recommended anchorage system for slope conditions.

1. Products: Subject to compliance with requirements, available products that may be incorporated into the Work include, but are not limited to, the following:

a. Invisible Structures, Inc.; Slopetame 2.
b. Presto Products Company, a business of Alcoa; Geoweb.
c. Tenax Corporation - USA; Tenweb.

PART 3- EXECUTION

3.1 EXAMINATION

A. Examine areas to be planted for compliance with requirements and other conditions affecting performance.

1. Verify that no foreign or deleterious material or liquid such as paint, paint washout, concrete slurry, concrete layers or chunks, cement, plaster, oils, gasoline, diesel fuel, paint thinner, turpentine, tar, roofing compound, or acid has been deposited in soil within a planting area.

2. Do not mix or place soils and soil amendments in frozen, wet, or muddy conditions.

3. Suspend soil spreading, grading, and tilling operations during periods of excessive soil moisture until the moisture content reaches acceptable levels to attain the required results.

4. Uniformly moisten excessively dry soil that is not workable and which is too dusty.

B. Proceed with installation only after unsatisfactory conditions have been corrected.

C. If contamination by foreign or deleterious material or liquid is present in soil within a planting area, remove the soil and contamination as directed by Architect and replace with new planting soil.

3.2 PREPARATION

A. Protect structures, utilities, sidewalks, pavements, and other facilities, trees, shrubs, and plantings from damage caused by planting operations.

1. Protect adjacent and adjoining areas from hydroseeding and hydromulching overspray.

2. Protect grade stakes set by others until directed to remove them.

B. Install erosion-control measures to prevent erosion or displacement of soils and discharge of soil-bearing water runoff or airborne dust to adjacent properties and walkways

3.3 LAWN PREPARATION

A. Apply inorganic soil amendments, organic soil amendments and fertilizers as recommended in Topsoil Analysis.

B. Finish Grading: Grade planting areas to a smooth, uniform surface plane with loose, uniformly fine texture. Grade to within plus or minus ½ inch of finish elevation.

C. Compaction: Compact growing medium sufficiently to reduce settling but not enough to prevent movement of water through growing medium. Compacted medium should feel firm to foot pressure, leaving only slight heel prints.

D. Moisten prepared lawn areas before planting if soil is dry. Water thoroughly and allow surface to dry before planting. Do not create muddy soil.

E. Restore areas if eroded or otherwise disturbed after finish grading and before planting.

3.4 PREPARATION FOR EROSION-CONTROL MATERIALS

A. Prepare area as specified in Section 3.3 Lawn Preparation.

B. Retain first two paragraphs below for erosion-control matting.

C. For erosion-control mats, install planting soil in two lifts, with second lift equal to thickness of erosion-control mats. Install erosion-control mat and fasten as recommended by material manufacturer.

D. Fill cells of erosion-control mat with planting soil and compact before planting.

E. Retain first paragraph below for erosion-control blanket or mesh.

F. For erosion-control blanket or mesh, install from top of slope, working downward, and as recommended by material manufacturer for site conditions. Fasten as recommended by material manufacturer.

G. Moisten prepared area before planting if surface is dry. Water thoroughly and allow surface to dry before planting. Do not create muddy soil.

3.5 SEEDING

A. Sow seed with spreader or seeding machine. Do not broadcast or drop seed when wind velocity exceeds 5 mph. Evenly distribute seed by sowing equal quantities in two directions at right angles to each other.

1. Do not use wet seed or seed that is moldy or otherwise damaged.

2. Do not seed against existing trees. Limit extent of seed to outside edge of planting saucer.

B. Revise first paragraph below to suit Project. Sowing rates vary with grass species and mixtures.

C. Sow seed at a total rate per manufactures seed type recommendations.

D. Rake seed lightly into top 1/8 inch of soil, roll lightly, and water with fine spray.

E. Protect seeded areas with slopes exceeding 1:3 with erosion-control fiber mesh installed and stapled according to manufacturer's written instructions.

F. Protect seeded areas with erosion-control mats where shown on Drawings; install and anchor according to manufacturer's written instructions.

G. Protect seeded areas with slopes not exceeding 1:6 by spreading straw mulch. Spread uniformly at a minimum rate of 2 tons/acre to form a continuous blanket 1-1/2 inches in loose thickness over seeded areas. Spread by hand, blower, or other suitable equipment.

H. Protection in paragraph below is usually required in warm, dry climates.

I. Protect seeded areas from hot, dry weather or drying winds by applying compost mulch or peat mulch or planting soil within 24 hours after completing seeding operations. Soak areas, scatter mulch uniformly to a thickness of 3/16 inch, and roll surface smooth.

3.6 HYDROSEEDING

A. Hydroseeding: Mix specified seed, fertilizer, and fiber mulch in water, using equipment specifically designed for hydroseed application. Continue mixing until uniformly blended into homogeneous slurry suitable for hydraulic application.

1. Mix slurry with fiber-mulch manufacturer's recommended tackifier.

2. Apply slurry uniformly to all areas to be seeded in a one-step process. Apply slurry at a rate so that mulch component is deposited at not less than 1500-lb/acre dry weight, and seed component is deposited at not less than the specified seed-sowing rate.

3. Apply slurry uniformly to all areas to be seeded in a two-step process. Apply first slurry coat at a rate so that mulch component is deposited at not less than 500-lb/acre dry weight, and seed component is deposited at not less than the specified seed-sowing rate. Apply slurry cover coat of fiber mulch (hydromulching) at a rate of 1000 lb/acre.

3.7 SODDING

A. Lay sod within 24 hours of harvesting. Do not lay sod if dormant or if ground is frozen or muddy.

B. Lay sod to form a solid mass with tightly fitted joints. Butt ends and sides of sod; do not stretch or overlap. Stagger sod strips or pads to offset joints in adjacent courses. Avoid damage to growth media layer or sod during installation. Tamp and roll lightly to ensure contact with growth medium layer, eliminate air pocket, and form a smooth surface. Work growth medium or fine sand into minor cracks between pieces of sod; remove excess to avoid smothering sod and adjacent grass.

C. Saturate sod with fine water spray within two hours of planting. During first week, water daily or more frequently as necessary to maintain moist soil to a minimum depth of 1-1/2 inches below sod.

3.8 TURF MAINTENANCE

A. Maintain and establish turf by watering, fertilizing, weeding, mowing, trimming, replanting, and performing other operations as required to establish healthy, viable turf. Roll, regrade, and replant bare or eroded areas and remulch to produce a uniformly smooth turf. Provide materials and installation the same as those used in the original installation.

1. Fill in as necessary soil subsidence that may occur because of settling or other processes. Replace materials and turf damaged or lost in areas of subsidence.

2. In areas where mulch has been disturbed by wind or maintenance operations, add new mulch and anchor as required to prevent displacement.

3. Apply treatments as required to keep turf and soil free of pests and pathogens or disease. Use integrated pest management practices whenever possible to mini-

mize the use of pesticides and reduce hazards.

B. Watering.

1. Adjacent to Training and Maintenance Buildings: Install and maintain temporary piping, hoses, and turf-watering equipment to convey water from sources and to keep turf uniformly moist to a depth of 4 inches.

   a. Schedule watering to prevent wilting, puddling, erosion, and displacement of seed or mulch. Lay out temporary watering system to avoid walking over muddy or newly planted areas.
   b. Water turf with fine spray at a minimum rate of 1 inch per week unless rainfall precipitation is adequate.

2. All other areas.

   a. Schedule watering to prevent wilting, puddling, erosion, and displacement of seed or mulch.

C. Mow turf as soon as top growth is tall enough to cut. Repeat mowing to maintain specified height without cutting more than 1/3 of grass height. Remove no more than 1/3 of grass-leaf growth in initial or subsequent mowings. Do not delay mowing until grass blades bend over and become matted. Do not mow when grass is wet. Revise timing of fertilizer application in paragraph below if a slow-release fertilizer was initially applied.

D. Turf Postfertilization: Apply fertilizer after initial mowing and when grass is dry.

1. Use fertilizer that will provide actual nitrogen of at least 1 lb/1000 sq. ft. to turf area.

3.9 SATISFACTORY TURF

A. Turf installations shall meet the following criteria as determined by Engineer:

1. Satisfactory Seeded Turf: At end of maintenance period, a healthy, uniform, close stand of grass has been established, free of weeds and surface irregularities.

2. Satisfactory Sodded Turf: At end of maintenance period, a healthy, well-rooted, even-colored, viable turf has been established, free of weeds, open joints, bare areas, and surface irregularities.

3. Satisfactory Plugged Turf: At end of maintenance period, the required number of plugs has been established as well-rooted, viable patches of grass, and areas between plugs are free of weeds and other undesirable vegetation.

4. Satisfactory Sprigged Turf: At end of maintenance period, the required number of sprigs has been established as well-rooted, viable plants, and areas between sprigs are free of weeds and other undesirable vegetation.

B. Use specified materials to reestablish turf that does not comply with requirements and continue maintenance until turf is satisfactory.

3.10 PESTICIDE APPLICATION

A. Apply pesticides and other chemical products and biological control agents in accordance with requirements of authorities having jurisdiction and manufacturer's written recommendations. Coordinate applications with Owner's operations and others in proximity to the Work. Notify Owner before each application is performed.

B. Post-Emergent Herbicides (Selective and Non-Selective): Apply only as necessary to treat already-germinated weeds and in accordance with manufacturer's written recommendations.

3.11 CLEANUP AND PROTECTION

A. Promptly remove growth medium and debris created by lawn work from paved areas. Clean wheels of vehicles before leaving site to avoid tracking soil onto roads, walks, or other paved areas.

B. Erect barricades and warning signs as required to protect newly planted areas from traffic. Maintain barricades throughout maintenance period and remove after lawn is established.

C. Remove temporary erosion-control measures after grass establishment period.

END OF SECTION

SECTION 03240
ADHESIVE ANCHORS

PART 1 - GENERAL

1.1 SUMMARY

A. All anchor bolts embedded in concrete shall be of the epoxy adhesive type whether specifically called out on the drawings or not. No expansion type, "red head" or any type of insert will be allowed without approval of the owner.

1.2 SUBMITTALS

A. Submittals shall be in accordance with Division 1.

PART 2 - PRODUCTS

2.1 CAPSULE ADHESIVE ANCHORING SYSTEM

A. Capsule adhesive anchor system shall consist of an all-thread rod, nut, washer and adhesive capsule.

B. Anchor rod shall be provided with a 45 degree chisel or cut point to provide proper mixing of the adhesive components. Anchor rods shall be manufactured to meet the following requirements of AISI 316 stainless steel meeting the mechanical requirements of ASTM F 593. Washers of nuts shall meet the same requirements as the rods. Rods, washers and nuts shall be furnished by the system manufacturer for compatibility with the system.

C. The adhesive capsules shall consist of a dual chamber foil capsule. The resin material shall be vinyl urethane methacrylate.

D. System shall be Hilti HVA Capsule Adhesive Anchoring System or approved equal.

2.2 INJECTABLE ANCHORING SYSTEM

A. Injectable adhesive anchoring system shall consist of an all-thread rod, nut, washer and a two component epoxy adhesive.

B. Anchor rods shall be furnished with chamfered ends so that either end will accept a nut and washer. Alternatively, anchor rods shall be furnished with a 45 degree chisel point on one end to allow for easy insertion into the adhesive filled hole. Anchor rods shall be manufactured to meet the following requirements of AISI 316 stainless steel meeting the mechanical requirements of ASTM F 593. Washers of nuts shall meet the same requirements as the rods. Rods, washers and nuts shall be furnished by the system manufacturer for compatibility with the system.

C. Injection adhesive is a hybrid adhesive consisting of a methacrylate resin, hardener, cement

and water. The system consists of adhesive refill packs, a mixing nozzle and, a dispenser.

D. Injection adhesive shall be Hilti HIT-HY 200 or HIT-ICE.

PART 3 - EXECUTION

3.1 INSTALLATION

A. Capsule Adhesive Anchoring System

1. Adhesive anchors shall be installed in holes drilled using the specified diameter carbide tipped drill bit or matched tolerance diamond core bit.

2. Hole depth shall be as indicated in the manufacturer's instructions

3. Hole must be cleaned to remove dust, debris, water, oil, chemicals and any other foreign matter or contaminants.

4. Place the capsule or capsules in hole. Ensure the capsule is inserted in the direction indicated on the capsule.

5. Using the setting tool on the rotary hammer drill, drive the rod in to the prescribed depth, Stop the drill immediately after the prescribed depth is reached. Do not disturb the anchor until the adhesive has fully cured.

6. After the adhesive has cured the anchor may be put in service. Do not over torque the rod.

B. Injectable Adhesive Anchoring System

1. Anchor holes shall be drilled with a carbide bit. Contact Manufacturer for drilling holes with a diamond bit.

2. Hole must be cleaned to remove dust, debris, water, oil, chemicals and any other foreign matter or contaminants.

3. Using the dispenser with static mixer inject adhesive into hole.

4. Install rod and allow adhesive to cure.

5. After the adhesive has cured the anchor may be put in service. Do not over torque the rod.

C. All anchors shall be installed in strict accordance with manufacturer's instructions.

D. Minimum Embedment depths shall be:

Anchor Bolt Dia.	Embedment Depth
1. 3/8"	3-1/2"
2. 1/2"	4-1/4"
3. 5/8"	5"
4. 3/4"	6-5/8"
5. 7/8"	7-1/2"
6. 1"	8-1/4"

END OF SECTION

SECTION 03300
CAST-IN-PLACE CONCRETE

PART 1 - GENERAL

1.1 RELATED DOCUMENTS

A. Drawings and general provisions of the Contract, including General and Supplementary Conditions and Division 1 Specification Sections, apply to this Section.

1.2 SUMMARY

A. This Section specifies cast-in place concrete, including formwork, reinforcement, concrete materials, mixture design, placement procedures, and finishes, for the following:

1. Interior Slab-on-grade
2. Exterior Concrete Pavement.
3. Exterior equipment pads.
4. Footings.
5. Foundation Walls.

1.3 SUBMITTALS

A. Product Data: For each type of product indicated.

B. Design Mixtures: For each concrete mixture. Submit alternate design mixtures when characteristics of materials, Project conditions, weather, test results, or other circumstances warrant adjustments. Indicate amounts of mixing water to be withheld for later addition at Project site.

C. Steel Reinforcement Shop Drawings: Placing drawings that detail fabrication, bending, and placement. Include bar sizes, lengths, material, grade, bar schedules, stirrup spacing, bent bar diagrams, bar arrangement, splices and laps, mechanical connections, tie spacing, hoop spacing, and supports for concrete reinforcement.

D. Material Test Reports: For the following, from a qualified testing agency, indicating compliance with requirements:

1. Aggregates. Include service record data indicating absence of deleterious expansion of concrete due to alkali aggregate reactivity.

E. Material Certificates: For each of the following, signed by manufacturers:

1. Cementitious materials.
2. Admixtures.
3. Form materials and form-release agents.
4. Steel reinforcement and accessories.

5. Vapor Barriers.
6. Curing compounds.
7. Bonding agents.
8. Adhesives.
9. Repair materials.

1.4 QUALITY ASSURANCE

A. Installer Qualifications: An experienced installer who has completed concrete Work similar in material, design, and extent to that indicated for this Project and whose work has resulted in construction with a record of successful in-service performance.

B. Manufacturer Qualifications: A firm experienced in manufacturing ready-mixed concrete products and that complies with ASTM C 94 requirements for production facilities and equipment.

1. Manufacturer certified according to NRMCA's "Certification of Ready Mixed Concrete Production Facilities."

C. Testing Agency Qualifications: An independent agency qualified according to ASTM C 1077 and ASTM E 329 for testing indicated, as documented according to ASTM E 548.

1. Personnel conducting field tests shall be qualified as ACI Concrete Field Testing Technician, Grade 1, according to ACI CP-01 or an equivalent certification program.
2. Personnel performing laboratory tests shall be ACI-certified Concrete Strength Testing Technician and Concrete Laboratory Testing Technician - Grade I. Testing Agency laboratory supervisor shall be an ACI-certified Concrete Laboratory Testing Technician - Grade II.

D. Source Limitations: Obtain each type or class of cementitious material of the same brand from the same manufacturer's plant, obtain aggregate from one source, and obtain admixtures through one source from a single manufacturer.

E. ACI Publications: Comply with the following unless modified by requirements in the Contract Documents:

1. ACI 301, "Specification for Structural Concrete,"
2. ACI 117, "Specifications for Tolerances for Concrete Construction and Materials."

F. Concrete Testing Service: Engage a qualified independent testing agency to perform material evaluation tests and to design concrete mixtures.

1.5 DELIVERY, STORAGE, AND HANDLING

A. Steel Reinforcement: Deliver, store, and handle steel reinforcement to prevent bending and damage.

PART 2 - PRODUCTS

2.1 MANUFACTURERS

A. In other Part 2 articles where titles below introduce lists, the following requirements apply to product selection:

1. Available Products: Subject to compliance with requirements, products that may be incorporated into the Work include, but are not limited to, products specified.
2. Available Manufacturers: Subject to compliance with requirements, manufacturers offering products that may be incorporated into the Work include, but are not limited to, manufacturers specified.

2.2 FORM-FACING MATERIALS

A. Smooth-Formed Finished Concrete: Form-facing panels that will provide continuous, true, and smooth concrete surfaces. Furnish in largest practicable sizes to minimize number of joints.

1. Exterior-grade plywood panels, suitable for concrete forms, complying with DOC PS 1, and as follows:

a. Medium-density overlay, Class 1 or better; mill-release agent treated and edge sealed.

B. Rough-Formed Finished Concrete: Plywood, lumber, metal, or another approved material. Provide lumber dressed on at least two edges and one side for tight fit.

C. Chamfer Strips: Wood, metal, PVC, or rubber strips, 3/4 by 3/4 inch, minimum.

D. Form-Release Agent: Commercially formulated form-release agent that will not bond with, stain, or adversely affect concrete surfaces and will not impair subsequent treatments of concrete surfaces. Formulate form-release agent with rust inhibitor for steel form-facing materials.

E. Form Ties: Factory-fabricated, removable or snap-off metal or glass-fiber-reinforced plastic form ties designed to resist lateral pressure of fresh concrete on forms and to prevent spalling of concrete on removal.

1. Furnish units that will leave no corrodible metal closer than 1 inch to the plane of exposed concrete surface.
2. Furnish ties that, when removed, will leave holes no larger than 1 inch in diameter in concrete surface.

2.3 STEEL REINFORCEMENT

A. Reinforcing Bars: ASTM A 615, Grade 60, deformed.

B. Plain-Steel Wire: ASTM A 82.

C. Deformed-Steel Wire: ASTM A 496.

D. Plain-Steel Welded Wire Reinforcement: ASTM A 185, plain, fabricated from as-drawn steel wire into flat sheets.

2.4 REINFORCEMENT ACCESSORIES

A. Joint Dowel Bars: ASTM A 615, Grade 60, plain-steel bars, cut bars true to length with ends square and free of burrs.

B. Bar Supports: Bolsters, chairs, spacers, and other devices for spacing, supporting, and fastening reinforcing bars and welded wire reinforcement in place. Manufacture bar supports from steel wire, plastic, or precast concrete according to CRSI's "Manual of Standard Practice," of greater compressive strength than concrete and as follows:

1. For concrete surfaces exposed to view where legs of wire bar supports contact forms, use CRSI Class 1 plastic-protected steel wire or CRSI Class 2 stainless-steel bar supports.

2.5 CONCRETE MATERIALS

A. Cementitious Material: Use the following cementitious materials, of the same type, brand, and source, throughout Project:

1. Portland Cement: ASTM C 150, Type I/II.

a. Fly Ash: ASTM C 618, Class F.

B. Normal-Weight Aggregates: ASTM C 33, Class 4S coarse aggregate or better, graded. Provide aggregates from a single source.

1. Maximum Coarse-Aggregate Size: 1 inch nominal unless noted otherwise. Use 3/4 inch nominal at floor slabs.
2. Fine Aggregate: Fine aggregate shall comply with ASTM C 33 and as herein specified. Free of materials with deleterious reactivity to alkali in cement.

C. Water: ASTM C 94 and potable. Clean, not detrimental to concrete and free from deleterious amounts of acids, alkali or organic materials.

2.6 ADMIXTURES

A. Air-Entraining Admixture: ASTM C 260.

B. Chemical Admixtures: Provide admixtures certified by manufacturer to be compatible with other admixtures and that will not contribute water-soluble chloride ions exceeding those permitted in hardened concrete. Do not use calcium chloride or admixtures containing calcium chloride.

1. Water-Reducing Admixture: ASTM C 494, Type A.
2. Retarding Admixture: ASTM C 494, Type B.
3. Water-Reducing and Retarding Admixture: ASTM C 494, Type D.
4. High-Range, Water-Reducing Admixture: ASTM C 494, Type F.

5. High-Range, Water-Reducing and Retarding Admixture: ASTM C 494, Type G.
6. Plasticizing and Retarding Admixture: ASTM C 1017, Type II.

2.7 VAPOR BARRIERS

A. Sheet Vapor Barrier: ASTM E 1745, Class A with a Perm Rating less than or equal to 0.018 perms (grains / (ft^2 *hr *in. Hg)) as tested by ASTM E 96.

1. Products: Subject to compliance with requirements, available products that may be incorporated into the Work include, but are not limited to, the following:

a. Reef Industries; Vaporguard.
b. Stego Industries; LLC; Stego Wrap (15 mil).
c. W.R. Meadows; Perminator (15 mil).

B. Vapor Barrier Accessories:

1. Seal Tape: Water vapor transmission rate per ASTM E 96 of 0.3 perms or less.
2. Vapor Proofing Mastic: Water vapor transmission rate per ASTM E 96 of 0.3 perms or less.
3. Pipe Boots: Construct pipe boots from vapor barrier material, pressure sensitive tape and/or mastic per manufacturer's instructions.

2.8 CURING MATERIALS

A. Evaporation Retarder: Waterborne, monomolecular film forming, manufactured for application to fresh concrete.

1. Available Products:

a. Axim Concrete Technologies; Cimfilm.
b. Burke by Edoco; BurkeFilm.
c. ChemMasters; Spray-Film.
d. Dayton Superior Corporation; Sure Film.
e. Euclid Chemical Company (The); Eucobar.
f. Kaufman Products, Inc.; Vapor Aid.
g. Lambert Corporation; Lambco Skin.
h. MBT Protection and Repair, Div. of ChemRex; Confilm.
i. Meadows, W. R., Inc.; Sealtight Evapre.
j. Metalcrete Industries; Waterhold.
k. Sika Corporation, Inc.; SikaFilm.
l. Symons Corporation, a Dayton Superior Company; Finishing Aid.
m. Vexcon Chemicals, Inc.; Certi-Vex EnvioAssist.
n. Or approved equal.

B. Moisture-Retaining Cover: ASTM C 171, polyethylene film or white burlap-polyethylene sheet.

C. Water: Potable.

D. Clear, Waterborne, Membrane-Forming Curing Compound: ASTM C 309, Type 1, Class B, dissipating.

1. Available Products:

a. Anti-Hydro International, Inc.; AH Curing Compound #2 DR WB.
b. Burke by Edoco; Aqua Resin Cure.
c. ChemMasters; Safe-Cure Clear.
d. Dayton Superior Corporation; Day Chem Rez Cure (J-11-W).
e. Euclid Chemical Company (The); Kurez DR VOX.
f. Kaufman Products, Inc.; Thinfilm 420.
g. L&M Construction Chemicals, Inc.; L&M Cure R.
h. Meadows, W. R., Inc.; 1100 Clear.
i. Symons Corporation, a Dayton Superior Company; Resi-Chem Clear Cure.
j. Tamms Industries, Inc.; Horncure WB 30.
k. Vexcon Chemicals, Inc.; Certi-Vex Enviocure 100.
l. Or approved equal.

E. Clear, Waterborne, Membrane-Forming Curing and Sealing Compound: ASTM C 1315, Type 1, Class A.

1. Available Products:

a. Burke by Edoco; Cureseal 1315 WB.
b. ChemMasters; Polyseal WB.
c. Euclid Chemical Company (The); Super Diamond Clear VOX.
d. Kaufman Products, Inc.; Sure Cure 25 Emulsion.
e. L&M Construction Chemicals, Inc.; Lumiseal WB Plus.
f. Meadows, W. R., Inc.; Vocomp-30.
g. Metalcrete Industries; Metcure 30.
h. Symons Corporation, a Dayton Superior Company; Cure & Seal 31 Percent E.
i. Tamms Industries, Inc.; LusterSeal WB 300.
j. Unitex; Hydro Seal 25.
k. Vexcon Chemicals, Inc.; Vexcon Starseal 1315.
l. Or approved equal.

2.9 RELATED MATERIALS

A. Expansion- and Isolation-Joint-Filler Strips: ASTM D 1751, asphalt-saturated cellulosic fiber.

B. Semirigid Joint Filler: Two-component, semirigid, 100 percent solids, epoxy resin with a Type A shore durometer hardness of 80 per ASTM D 2240.

C. Bonding Agent: ASTM C 1059, Type II, non-redispersible, acrylic emulsion or styrene butadiene.

D. Epoxy Bonding Adhesive: ASTM C 881, two-component epoxy resin, capable of humid curing and bonding to damp surfaces, of class suitable for application temperature and of grade to suit requirements, and as follows:

1. Types IV and V, load bearing, for bonding hardened or freshly mixed concrete to hardened concrete.

E. High-Strength Epoxy Doweling System: Epoxy doweling system shall consist of an injectable two-part epoxy complying with the requirements of ASTM C881-90, Type IV, Grade 3, Class B and C except gel times. Epoxy doweling system shall be tested in accordance with ICC Acceptance Criteria 308 demonstrating compliance with the performance features of ACI 355. The epoxy doweling system shall be installed according to manufacturer's instructions.

1. Available Products:

a. Hilti HIT-HY 200 Epoxy Adhesive Anchoring System (ICC ESR-3187)
b. Powers AC100+ Gold Adhesive Anchor System (ICC ESR-2582)
c. Simpson Strong-Tie SET-XP Epoxy Adhesive Anchors (Use of SET-PAC system not allowed). (ICC ESR-2508).
d. Or approved equal.

F. Expansion Wedge Anchors: Expansion wedge anchors shall consist of threaded stud bolt body and integral wedge expander, nut, and washer complying with the requirements of Federal Specification A-A 1923A, Type 4. Expansion wedge anchors shall be tested in accordance with ICC Acceptance Criteria 193 demonstrating compliance with the performance features of ACI 355.2. Expansion wedge anchors shall have an ICC-ES Evaluation Report (ESR) indicating it is intended for use in both cracked and uncracked normal weight concrete in Seismic Design Categories A through F. Anchors shall be made of zinc-plated carbon steel meeting ASTM B633 or Type 304 stainless steel.

1. Available Products:

a. Hilti Kwik Bolt TZ Carbon and Stainless Steel Anchors (ICC ESR-1917)
b. Powers Power-Stud+ SD1/SD2 Anchor (ICC ESR-2818/ESR-2502/)
c. Simpson STRONG-BOLT/STRONG-BOLT 2 Wedge Anchor (ICC ESR-1771/ESR-3037)
d. Or approved equal.

2.10 REPAIR MATERIALS

A. Repair Underlayment: Cement-based, polymer-modified, self-leveling product that can be applied in thicknesses from 1/8 inch and that can be feathered at edges to match adjacent slab elevations.

1. Cement Binder: ASTM C 150, portland cement or hydraulic or blended hydraulic cement as defined in ASTM C 219.
2. Primer: Product of underlayment manufacturer recommended for substrate, conditions, and application.

3. Aggregate: Well-graded, washed gravel, 1/8 to 1/4 inch or coarse sand as recommended by underlayment manufacturer.
4. Compressive Strength: Not less than 5000 psi at 28 days when tested according to ASTM C 109.

B. Repair Overlayment: Cement-based, polymer-modified, self-leveling product that can be applied in thicknesses from 1/8 inch and that can be feathered at edges to match adjacent slab elevations.

1. Cement Binder: ASTM C 150, portland cement or hydraulic or blended hydraulic cement as defined in ASTM C 219.
2. Primer: Product of topping manufacturer recommended for substrate, conditions, and application.
3. Aggregate: Well-graded, washed gravel, 1/8 to 1/4 inch or coarse sand as recommended by topping manufacturer.
4. Compressive Strength: Not less than 5000 psi at 28 days when tested according to ASTM C 109.

2.11 CONCRETE MIXTURES, GENERAL

A. Prepare design mixtures for each type and strength of concrete, proportioned on the basis of laboratory trial mixture or field test data, or both, according to ACI 301.

1. Use a qualified independent testing agency for preparing and reporting proposed mixture designs based on laboratory trial mixtures.

B. Cementitious Materials: Limit percentage, by weight, of cementitious materials other than portland cement in concrete as follows:

1. Fly Ash: 20 percent.

C. Limit water-soluble, chloride-ion content in hardened concrete to 0.10 percent by weight of cement.

D. Admixtures: Use admixtures according to manufacturer's written instructions.

1. Use water-reducing, high-range water-reducing, or plasticizing admixture in concrete, as required, for placement and workability.
2. Use water-reducing and retarding admixture when required by high temperatures, low humidity, or other adverse placement conditions, including vertical wall placements with a height to width ratio greater than 12.
3. Use water-reducing admixture in pumped concrete, concrete required to be watertight, and concrete with a water-cementitious materials ratio below 0.50.

2.12 CONCRETE MIXTURES FOR STRUCTURAL ELEMENTS

A. Exterior equipment pads and pavement: Proportion normal-weight concrete mixture as follows:

1. Minimum Compressive Strength: 4,500 psi.

2. Maximum Water-Cementitious Materials Ratio: 0.50.
3. Slump Limit: 3 to 5 inches.
4. Air Content: 6 percent, plus or minus 1.5 percent at point of delivery for 1-inch nominal maximum aggregate size.

B. Interior Slab-on-grade and Formed Walls: Proportion normal-weight concrete mixture as follows:

1. Minimum Compressive Strength: 4,000 psi.
2. Maximum Water-Cementitious Materials Ratio: 0.45.
3. Slump Limit: 3 to 5 inches.
4. Air Content: 6 percent, plus or minus 1.5 percent at point of delivery for 1-inch nominal maximum aggregate size.

C. Footings: Proportion normal-weight concrete mixture as follows:

1. Minimum Compressive Strength: 4,000 psi at 28 days.
2. Maximum Water-Cementitious Materials Ratio: 0.45.
3. Slump Limit for Vibrated Concrete: 3 to 5 inches.
4. Air Content: 3 percent, plus or minus 1.5 percent at point of delivery for 1-inch nominal maximum aggregate size.

2.13 FABRICATING REINFORCEMENT

A. Fabricate steel reinforcement according to CRSI's "Manual of Standard Practice."

2.14 CONCRETE MIXING

A. Ready-Mixed Concrete: Measure, batch, mix, and deliver concrete according to ASTM C 94, and furnish batch ticket information.

1. When air temperature is between 85 and 90 deg F, reduce mixing and delivery time from 1-1/2 hours to 75 minutes; when air temperature is above 90 deg F, reduce mixing and delivery time to 60 minutes.

2. Provide one copy of delivery ticket with the following information: Batch weights for each mix component, batch time, concrete plant location, and volume of water withheld (in gallons).

B. Project-Site Mixing: Not Permitted.

PART 3 - EXECUTION

3.1 FORMWORK

A. Design, erect, shore, brace, and maintain formwork, according to ACI 301, to support vertical, lateral, static, and dynamic loads, and construction loads that might be applied, until structure can support such loads.

B. Construct formwork so concrete members and structures are of size, shape, alignment, elevation, and position indicated, within tolerance limits of ACI 117.

C. Limit concrete surface irregularities, designated by ACI 347R as abrupt or gradual, as follows:

1. Class A, 1/8 inch for smooth-formed finished surfaces.
2. Class C, 1/2 inch for rough-formed finished surfaces.

D. Construct forms tight enough to prevent loss of concrete mortar.

E. Fabricate forms for easy removal without hammering or prying against concrete surfaces. Provide crush or wrecking plates where stripping may damage cast concrete surfaces. Provide top forms for inclined surfaces steeper than 1.5 horizontal to 1 vertical.

1. Install keyways, recesses, and the like, for easy removal.
2. Do not use rust-stained steel form-facing material.

F. Set edge forms, bulkheads, and intermediate screed strips for slabs to achieve required elevations and slopes in finished concrete surfaces. Provide and secure units to support screed strips; use strike-off templates or compacting-type screeds.

G. Provide temporary openings for cleanouts and inspection ports where interior area of formwork is inaccessible. Close openings with panels tightly fitted to forms and securely braced to prevent loss of concrete mortar. Locate temporary openings in forms at inconspicuous locations.

H. Chamfer exterior corners and edges of permanently exposed concrete.

I. Form openings, chases, offsets, sinkages, keyways, blocking, screeds, and bulkheads required in the Work. Determine sizes and locations from trades providing such items.

J. Clean forms and adjacent surfaces to receive concrete. Remove chips, wood, sawdust, dirt, and other debris just before placing concrete.

K. Retighten forms and bracing before placing concrete, as required, to prevent mortar leaks and maintain proper alignment.

L. Coat contact surfaces of forms with form-release agent, according to manufacturer's written instructions, before placing reinforcement.

3.2 EMBEDDED ITEMS

A. Place and secure anchorage devices and other embedded items required for adjoining work that is attached to or supported by cast-in-place concrete. Use setting drawings, templates, diagrams, instructions, and directions furnished with items to be embedded.

1. Install anchor rods, accurately located, to elevations required and complying with tolerances in Section 7.5 of AISC's "Code of Standard Practice for Steel Buildings and Bridges."

2. Install dovetail anchor slots in concrete structures as indicated.

3.3 REMOVING AND REUSING FORMS

A. General: Formwork for sides of beams, walls, and similar parts of the Work that does not support weight of concrete may be removed after cumulatively curing at not less than 50 deg F 12 hours after placing concrete, if concrete is hard enough to not be damaged by form-removal operations and curing and protection operations are maintained.

B. Clean and repair surfaces of forms to be reused in the Work. Split, frayed, delaminated, or otherwise damaged form-facing material will not be acceptable for exposed surfaces. Apply new form-release agent.

C. When forms are reused, clean surfaces, remove fins and laitance, and tighten to close joints. Align and secure joints to avoid offsets. Do not use patched forms for exposed concrete surfaces unless approved by Engineer.

3.4 VAPOR BARRIERS

A. Plastic Vapor Barriers: Place, protect, and repair vapor retarders according to ASTM E 1643 and manufacturer's written instructions. Lap joints 6 inches and seal with manufacturer's recommended tape.

3.5 STEEL REINFORCEMENT

A. General: Comply with CRSI's "Manual of Standard Practice" for placing reinforcement.

1. Do not cut or puncture vapor retarder. Repair damage and reseal vapor retarder before placing concrete.

B. Clean reinforcement of loose rust and mill scale, earth, ice, and other foreign materials that would reduce bond to concrete.

C. Accurately position, support, and secure reinforcement against displacement. Locate and support reinforcement with bar supports to maintain minimum concrete cover. Do not tack weld crossing reinforcing bars.

D. Set wire ties with ends directed into concrete, not toward exposed concrete surfaces.

E. Install welded wire reinforcement in longest practicable lengths on bar supports spaced to minimize sagging. Lap edges and ends of adjoining sheets at least one mesh spacing. Offset laps of adjoining sheet widths to prevent continuous laps in either direction. Lace overlaps with wire.

3.6 JOINTS

A. General: Construct joints true to line with faces perpendicular to surface plane of concrete.

B. Construction Joints: Install so strength and appearance of concrete are not impaired, at locations indicated or as approved by Engineer.

1. Unless indicated otherwise on the drawings or approved by the Engineer, the unit of operation shall not exceed 30 feet in any horizontal direction. Concrete shall be placed continuously so the unit will be monolithic in construction. At least 7 days shall elapse between the casting of adjoining units unless approved by the Engineer.
2. Place joints perpendicular to main reinforcement. Continue reinforcement across construction joints, unless otherwise indicated. Do not continue reinforcement through sides of strip placements of floors and slabs.
3. Unless indicated otherwise, provide keyways at least 1-1/2 inches deep in construction joints in walls and slabs and between walls and footings. Bulkheads designed and accepted for purposed may be used.
4. Locate horizontal joints in walls and columns at underside of floors, slabs, beams, and girders and at the top of footings or floor slabs.
5. Use epoxy-bonding adhesive at locations where fresh concrete is placed against hardened or partially hardened concrete surfaces.
6. Provide waterstops in construction joints as indicated. Install waterstops to form a continuous diaphragm in each joint. Support and protect exposed waterstops during progress of work. Field fabricate joints in waterstops according to manufacturer's printed instructions.

C. Contraction Joints in Slabs-on-Grade: Form weakened-plane contraction joints, sectioning concrete into areas as indicated. Construct contraction joints for a depth equal to at least one-fourth of concrete thickness as follows:

1. Grooved Joints: Form contraction joints after initial floating by grooving and finishing each edge of joint to a radius of 1/8 inch. Repeat grooving of contraction joints after applying surface finishes. Eliminate groover tool marks on concrete surfaces.
2. Sawed Joints: Form contraction joints with power saws equipped with shatterproof abrasive or diamond-rimmed blades. Cut 1/8-inch-wide joints into concrete when cutting action will not tear, abrade, or otherwise damage surface and before concrete develops random contraction cracks.

D. Isolation Joints in Slabs-on-Grade: After removing formwork, install joint-filler strips at slab junctions with vertical surfaces, such as column pedestals, foundation walls, grade beams, and other locations, as indicated.

1. Extend joint-filler strips full width and depth of joint, terminating flush with finished concrete surface, unless otherwise indicated.
2. Install joint-filler strips in lengths as long as practicable. Where more than one length is required, lace or clip sections together.

E. Doweled Joints: Install dowel bars and support assemblies at joints where indicated. Lubricate or asphalt coat one-half of dowel length to prevent concrete bonding to one side of joint.

3.7 CONCRETE BONDING

A. General: Before depositing new concrete on or against concrete which has set, the existing surfaces shall be thoroughly roughened in a manner to uniformly expose the bonding aggregate. The existing surface shall be cleaned of all laitance, foreign matter, and loose particles.

B. Apply epoxy adhesive bonding agent to roughened concrete surface per the epoxy adhesive manufacturer's instructions. Handle, store, and mix the epoxy adhesive agent carefully and in compliance with manufacturer's instructions. Place fresh concrete on bonding agent within allowable time limit set by manufacturer's instructions.

3.8 CONCRETE PLACEMENT

A. Before placing concrete, verify that installation of formwork, reinforcement, and embedded items is complete and that required inspections have been performed.

B. Before test sampling and placing concrete, water may be added at Project site, subject to limitations of ACI 301.

1. Do not add water to concrete after adding high-range water-reducing admixtures to mixture.

C. Deposit concrete continuously in one layer or in horizontal layers of such thickness that no new concrete will be placed on concrete that has hardened enough to cause seams or planes of weakness. If a section cannot be placed continuously, provide construction joints as indicated. Deposit concrete to avoid segregation.

1. Deposit concrete in horizontal layers of depth to not exceed formwork design pressures and in a manner to avoid inclined construction joints.
2. Consolidate placed concrete with mechanical vibrating equipment according to ACI 301. Contractor shall maintain two fully functioning vibrators at all times at the project site.
3. Do not use vibrators to transport concrete inside forms. Insert and withdraw vibrators vertically at uniformly spaced locations to rapidly penetrate placed layer and at least 6 inches into preceding layer. Do not insert vibrators into lower layers of concrete that have begun to lose plasticity. At each insertion, limit duration of vibration to time necessary to consolidate concrete and complete embedment of reinforcement and other embedded items without causing mixture constituents to segregate.

D. Deposit and consolidate concrete for floors and slabs in a continuous operation, within limits of construction joints, until placement of a panel or section is complete.

1. Consolidate concrete during placement operations so concrete is thoroughly worked around reinforcement and other embedded items and into corners.
2. Maintain reinforcement in position on chairs during concrete placement.
3. Screed slab surfaces with a straightedge and strike off to correct elevations.
4. Slope surfaces uniformly to drains where required.

5. Begin initial floating using bull floats or darbies to form a uniform and open-textured surface plane, before excess bleedwater appears on the surface. Do not further disturb slab surfaces before starting finishing operations.

E. Cold-Weather Placement: Comply with ACI 306.1 and as follows. Protect concrete work from physical damage or reduced strength that could be caused by frost, freezing actions, or low temperatures.

1. When average high and low temperature is expected to fall below 40 deg F for three successive days, maintain delivered concrete mixture temperature within the temperature range required by ACI 301.
2. Do not use frozen materials or materials containing ice or snow. Do not place concrete on frozen subgrade or on subgrade containing frozen materials.
3. Do not use calcium chloride, salt, or other materials containing antifreeze agents or chemical accelerators unless otherwise specified and approved in mixture designs.

F. Hot-Weather Placement: Comply with ACI 301 and as follows:

1. Maintain concrete temperature below 90 deg F at time of placement. Chilled mixing water or chopped ice may be used to control temperature, provided water equivalent of ice is calculated to total amount of mixing water. Using liquid nitrogen to cool concrete is Contractor's option.
2. Fog-spray forms, steel reinforcement, and subgrade just before placing concrete. Keep subgrade uniformly moist without standing water, soft spots, or dry areas.

3.9 FINISHING FORMED SURFACES

A. Rough-Formed Finish: As-cast concrete texture imparted by form-facing material with tie holes and defects repaired and patched. Remove fins and other projections that exceed specified limits on formed-surface irregularities.

1. Apply to concrete surfaces not exposed to public view.

B. Smooth-Formed Finish: As-cast concrete texture imparted by form-facing material, arranged in an orderly and symmetrical manner with a minimum of seams. Repair and patch tie holes and defects. Remove fins and other projections that exceed specified limits on formed-surface irregularities.

1. Apply to concrete surfaces exposed to public view.

C. Related Unformed Surfaces: At tops of walls, horizontal offsets, and similar unformed surfaces adjacent to formed surfaces, strike off smooth and finish with a texture matching adjacent formed surfaces. Continue final surface treatment of formed surfaces uniformly across adjacent unformed surfaces, unless otherwise indicated.

3.10 FINISHING FLOORS AND SLABS

A. General: Comply with ACI 302.1R recommendations for screeding, restraightening, and finishing operations for concrete surfaces. Do not wet concrete surfaces.

B. Float Finish: Consolidate surface with power-driven floats or by hand floating if area is small or inaccessible to power driven floats. Restraighten, cut down high spots, and fill low spots. Repeat float passes and restraightening until surface is left with a uniform, smooth, granular texture.

1. Apply float finish to surfaces to receive trowel finish or broom finish.

C. Trowel Finish: After applying float finish, apply first troweling and consolidate concrete by hand or power-driven trowel. Continue troweling passes and restraighten until surface is free of trowel marks and uniform in texture and appearance. Apply trowel finish to all exposed interior floor slabs.

D. Broom Finish: Apply a broom finish to exterior concrete slabs, pads, and elsewhere as indicated.

1. Immediately after float finishing, slightly roughen trafficked surface by brooming with fiber-bristle broom perpendicular to main traffic route. Coordinate required final finish with Engineer before application.

3.11 MISCELLANEOUS CONCRETE ITEMS

A. Filling In: Fill in holes and openings left in concrete structures, unless otherwise indicated, after work of other trades is in place. Mix, place, and cure concrete, as specified, to blend with in-place construction. Provide other miscellaneous concrete filling indicated or required to complete the Work.

B. Equipment Bases and Foundations: Provide machine and equipment bases and foundations as shown on Drawings. Set anchor bolts for machines and equipment at correct elevations, complying with diagrams or templates from manufacturer furnishing machines and equipment.

3.12 CONCRETE PROTECTING AND CURING

A. General: Protect freshly placed concrete from premature drying and excessive cold or hot temperatures. Comply with ACI 306.1 for cold-weather protection and ACI 301 for hot-weather protection during curing.

B. Evaporation Retarder: Apply evaporation retarder to unformed concrete surfaces if hot, dry, or windy conditions cause moisture loss approaching 0.2 lb/sq. ft. x h before and during finishing operations. Apply according to manufacturer's written instructions after placing, screeding, and bull floating or darbying concrete, but before float finishing.

C. Formed Surfaces: Cure formed concrete surfaces, including underside of beams, supported slabs, and other similar surfaces. If forms remain during curing period, moist cure after

loosening forms. If removing forms before end of curing period, continue curing for the remainder of the curing period.

D. Unformed Surfaces: Begin curing immediately after finishing concrete. Cure unformed surfaces, including floors and slabs, concrete floor toppings, and other surfaces.

E. Cure concrete according to ACI 308.1, by one or a combination of the following methods:

1. Moisture Curing: Keep surfaces continuously moist for not less than seven days with the following materials:

   a. Water.
   b. Continuous water-fog spray.
   c. Absorptive cover, water saturated, and kept continuously wet. Cover concrete surfaces and edges with 12-inch lap over adjacent absorptive covers.

2. Moisture-Retaining-Cover Curing: Cover concrete surfaces with moisture-retaining cover for curing concrete, placed in widest practicable width, with sides and ends lapped at least 12 inches, and sealed by waterproof tape or adhesive. Cure for not less than seven days. Immediately repair any holes or tears during curing period using cover material and waterproof tape.

   a. Moisture cure or use moisture-retaining covers to cure concrete surfaces to receive penetrating liquid floor treatments.
   b. Cure concrete surfaces to receive floor coverings with either a moisture-retaining cover or a curing compound that the manufacturer certifies will not interfere with bonding of floor covering used on Project.

3. Curing Compound: Apply uniformly in continuous operation by power spray or roller according to manufacturer's written instructions. Recoat areas subjected to heavy rainfall within three hours after initial application. Maintain continuity of coating and repair damage during curing period.

   a. After curing period has elapsed, remove curing compound without damaging concrete surfaces by method recommended by curing compound manufacturer unless manufacturer certifies curing compound will not interfere with bonding of any floor covering used on Project.

4. Curing and Sealing Compound: Apply uniformly to floors and slabs indicated in a continuous operation by power spray or roller according to manufacturer's written instructions. Recoat areas subjected to heavy rainfall within three hours after initial application. Repeat process 24 hours later and apply a second coat. Maintain continuity of coating and repair damage during curing period.

3.13 JOINT FILLING

A. Prepare, clean, and install joint filler according to manufacturer's written instructions.

1. Defer joint filling until concrete has aged at least one month. Do not fill joints until construction traffic has permanently ceased.

B. Remove dirt, debris, saw cuttings, curing compounds, and sealers from joints; leave contact faces of joint clean and dry.

C. Install semirigid joint filler full depth in saw-cut joints and at least 2 inches deep in formed joints. Overfill joint and trim joint filler flush with top of joint after hardening.

3.14 CONCRETE SURFACE REPAIRS

A. Defective Concrete: Repair and patch defective areas when approved by Engineer. Remove and replace concrete that cannot be repaired and patched to Engineer's approval.

B. Patching Mortar: Mix dry-pack patching mortar, consisting of one part portland cement to two and one-half parts fine aggregate passing a No. 16 sieve, using only enough water for handling and placing.

C. Repairing Formed Surfaces: Surface defects include color and texture irregularities, cracks, spalls, air bubbles, honeycombs, rock pockets, fins and other projections on the surface, and stains and other discolorations that cannot be removed by cleaning.

1. Immediately after form removal, cut out honeycombs, rock pockets, and voids more than 1/2 inch in any dimension in solid concrete, but not less than 1 inch in depth. Make edges of cuts perpendicular to concrete surface. Clean, dampen with water, and brush-coat holes and voids with bonding agent. Fill and compact with patching mortar before bonding agent has dried. Fill form-tie voids with patching mortar or cone plugs secured in place with bonding agent.
2. Repair defects on surfaces exposed to view by blending white portland cement and standard portland cement so that, when dry, patching mortar will match surrounding color. Patch a test area at inconspicuous locations to verify mixture and color match before proceeding with patching. Compact mortar in place and strike off slightly higher than surrounding surface.
3. Repair defects on concealed formed surfaces that affect concrete's durability and structural performance as determined by Engineer.

D. Repairing Unformed Surfaces: Test unformed surfaces, such as floors and slabs, for finish and verify surface tolerances specified for each surface. Correct low and high areas. Test surfaces sloped to drain for trueness of slope and smoothness; use a sloped template.

1. Repair finished surfaces containing defects. Surface defects include spalls, popouts, honeycombs, rock pockets, crazing and cracks in excess of 0.01 inch wide or that penetrate to reinforcement or completely through unreinforced sections regardless of width, and other objectionable conditions.
2. After concrete has cured at least 14 days, correct high areas by grinding.
3. Correct localized low areas during or immediately after completing surface finishing operations by cutting out low areas and replacing with patching mortar. Finish repaired areas to blend into adjacent concrete.

4. Correct other low areas scheduled to receive floor coverings with a repair underlayment. Prepare, mix, and apply repair underlayment and primer according to manufacturer's written instructions to produce a smooth, uniform, plane, and level surface. Feather edges to match adjacent floor elevations.
5. Correct other low areas scheduled to remain exposed with a repair topping. Cut out low areas to ensure a minimum repair topping depth of 1/4 inch to match adjacent floor elevations. Prepare, mix, and apply repair topping and primer according to manufacturer's written instructions to produce a smooth, uniform, plane, and level surface.
6. Repair defective areas, except random cracks and single holes 1 inch or less in diameter, by cutting out and replacing with fresh concrete. Remove defective areas with clean, square cuts and expose steel reinforcement with at least a 3/4-inch clearance all around. Dampen concrete surfaces in contact with patching concrete and apply bonding agent. Mix patching concrete of same materials and mixture as original concrete except without coarse aggregate. Place, compact, and finish to blend with adjacent finished concrete. Cure in same manner as adjacent concrete.
7. Repair random cracks and single holes 1 inch or less in diameter with patching mortar. Groove top of cracks and cut out holes to sound concrete and clean off dust, dirt, and loose particles. Dampen cleaned concrete surfaces and apply bonding agent. Place patching mortar before bonding agent has dried. Compact patching mortar and finish to match adjacent concrete. Keep patched area continuously moist for at least 72 hours.

E. Perform structural repairs of concrete, subject to Engineer's approval, using epoxy adhesive and patching mortar.

F. Repair materials and installation not specified above may be used, subject to Engineer's approval.

3.15 FIELD QUALITY CONTROL

A. Testing and Inspecting: Owner shall engage a Special Inspector and a qualified independent testing and inspecting agency to perform field tests and inspections and prepare test reports per the requirements of the Statement of Special Inspections:

B. Concrete Tests: Testing of composite samples of fresh concrete obtained according to ASTM C 172 shall be performed according to the following requirements:

1. Testing Frequency: Obtain one composite sample for each day's pour of each concrete mixture less than 25 cu. yd., plus one set for each additional 50 cu. yd. or fraction thereof.

   a. When frequency of testing will provide fewer than five compressive-strength tests for each concrete mixture, testing shall be conducted from at least five randomly selected batches or from each batch if fewer than five are used.

2. Slump: ASTM C 143; one test at point of placement for each composite sample, but not less than one test for each day's pour of each concrete mixture. Perform additional tests when concrete consistency appears to change.

3. Air Content: ASTM C 231, pressure method; one test for each composite sample, but not less than one test for each day's pour of each concrete mixture.
4. Concrete Temperature: ASTM C 1064; one test hourly when air temperature is 40 deg F and below and when 80 deg F and above, and one test for each composite sample.
5. Compression Test Specimens: ASTM C 31.

    a. Cast and laboratory cure one set of four standard cylinder specimens for each composite sample.

6. Compressive-Strength Tests: ASTM C 39; test one (1) laboratory-cured specimen at 7 days and two (2) specimens at 28 days, and retain two (2) specimens for later testing at 56 days if 28 day strength falls below the required specified strength.

    a. A compressive-strength test shall be the average compressive strength from a set of two specimens obtained from same composite sample and tested at age indicated.

7. Strength of each concrete mixture will be satisfactory if every average of any three consecutive compressive-strength tests equals or exceeds specified compressive strength and no compressive-strength test value falls below specified compressive strength by more than 500 psi.

C. Concrete Test results shall be reported in writing to Owner's Representative, concrete manufacturer, and Contractor within 48 hours of testing. Reports of compressive-strength tests shall contain Project identification name and number, date of concrete placement, name of concrete testing and inspecting agency, location of concrete batch in Work, design compressive strength at 28 days, concrete mixture proportions and materials, compressive breaking strength, and type of break for both 7- and 28-day tests.

D. Strength Evaluation of Concrete Structures: The strength of the concrete structure in-place shall be considered deficient if it fails to comply with any of the requirements which control the strength of the concrete, including the following conditions:

1. Failure to meet compressive strength requirements.
2. Concrete which differs from the required dimensions or locations in such a manner that reduces strength.
3. Concrete which has been subjected to damaging mechanical disturbances; particularly load stresses, heavy shock, or excessive vibration.
4. Poor workmanship and quality control which is likely to result in deficient strength.

E. Testing of In-Place Concrete Structure for Strength: When there are compression test results or other evidence that indicate that the in-place concrete structure does not meet strength specification requirements, then the testing agency shall take cores drilled from hardened concrete for compressive strength determination, complying with ASTM C 42 and as follows:

1. Take at least 3 representative cores form each member or area of the in-place concrete structure that has suspect strength, from locations as directed by the Engineer.
2. Test cores in a saturated-surface-dry condition per ACI 318 if the concrete will be wet during the use of the completed structure.

3. Strength of concrete for each series of cores will be considered satisfactory if their average compressive strength is a least 85 percent and no single core is less than 75 percent of the 28 day required compressive strength.
4. Report core test results in writing to the Engineer within 24 hours of the tests. Reports of core tests shall contain the project identification name and number, date of coring, date of test, name of concrete testing service, location of test core in the structure, concrete type and class represented by the core sample, design compressive strength at 28 days, concrete mix proportions and materials, compressive breaking strength, type of break, direction of applied load to core with respect to horizontal plane of the concrete as placed, and the moisture condition of the core at the time of testing.

F. Nondestructive Testing: Impact hammer, sonoscope, or other nondestructive device may be permitted by Owner's Representative but will not be used as sole basis for approval or rejection of concrete.

G. Additional testing and inspecting, at Contractor's expense, will be performed to determine compliance of replaced or additional work with specified requirements.

H. Correct deficiencies in the Work that test reports and inspections indicate dos not comply with the Contract Documents.

I. Structurally Inadequate In-Place Concrete: If in-place concrete is found to be structurally inadequate based on core tests or by results of non-destructive testing, then the rejected in-place concrete work shall be repaired, or removed and replaced, as directed by the Owner's Representative.

END OF SECTION

SECTION 03400
PRE-CAST CONCRETE STRUCTURES

PART 1- GENERAL

1.1 SUMMARY

A. This work entails providing materials and installation of pre-cast manholes and appurtenances, including appropriate penetrations for piping, grouting the inverts and sealing the pipe penetrations and joints. The Section also has a provision for Constructed In-Place Manholes.

B. All manholes shall be installed in accordance with these specifications and manhole details on the construction drawings.

C. This includes precast concrete wetwells as indicated on the Drawings.

1.2 RELATED SECTIONS

A. Intent: The provisions and intent of the AGREEMENT, including the General Conditions, Supplementary Conditions, and other requirements of the Contract Documents apply to the WORK as specified in this Section. WORK related to this Section is described throughout the Specifications

1.3 REFERENCES

A. Virginia Department of Transportation (VDOT) Road and Bridge Specifications

B. American Society for Testing and Materials (ASTM)

C. American Concrete Institute (ACI)

1.4 SUBMITTALS

A. Submittals shall be in accordance with Division 1.

B. Submit Shop Drawings including dimensions, reinforcing, and material Specifications.

1.5 QUALITY ASSURANCE

A. All manholes in Virginia Department of Transportation (VDOT) right-of-ways to be installed as instructed in the permit and CONTRACTOR shall notify the VDOT inspector prior to construction of the manholes, if required.

B. Manholes shall be manufactured in accordance with the latest ACI, Standard 318, Building Code, ASTM C 478, or as approved by ENGINEER.

C. Standard manhole frame and cover shall be as specified on the drawings.

D. Iron castings shall conform to the standard Specifications for Grey Iron Castings ASTM Specification A 4841, Class 20.

E. Fabricator Qualifications: Firms which have ten (10) years successful experience in fabrication of precast concrete units similar to units required for this project will be acceptable. Fabricator must have sufficient projection capacity to produce required units without causing delay in work.

F. Design Requirements: All sections shall be designed to meet the requirements of ACI 350 "Environmental Engineering Concrete Structures". The structures shall be capable of resisting the uplift forces for a completed submerged exterior condition and no water inside the structure, during construction and in permanent position. All sections shall be designed to support soil loads, hydrostatic pressure, and any surcharge pressures.

a. Angle of Internal Friction = 28 Degrees.
b. Soil Density = 125 PCF.
c. Coefficient of At-Rest Earth Pressure = 0.47.

1.6 DELIVERY, STORAGE, AND HANDLING

A. CONTRACTOR shall provide an area on-site for off-loading and storage of pre-cast structures delivered to the site. The surface on which the structures are placed shall not cause eccentric loadings which may damage the items. Prior, and during installation, precast structures will be moved utilizing equipment of sufficient capacity to safely move and place such structures. Any damage to pre-cast structure shall be reported to the ENGINEER for determination as to its ability to meet its intended use. Any structure damaged such that it cannot be used as intended, will be rejected by the ENGINEER and CONTRACTOR shall replace in-kind at its sole expense.

PART 2- PRODUCTS

2.1 MANHOLES AND WETWELLS

A. Precast Manhole: Unless authorized by ENGINEER, manholes will be of the precast concrete type as shown on the Drawings. Manholes shall be manufactured in accordance with the latest ACI Building Code, Chapter 13, for Class A, Air-Entrained Concrete or as approved by UCC. Pre-cast manholes shall conform to ASTM C-478. Manholes shall be 4 foot diameter, unless otherwise noted on the Drawings.

B. Manhole Frame and Cover: Manhole frames and covers shall be heavy duty, traffic resistant, gray cast iron. Frame and cover castings shall conform to the details and dimensions shown in these specifications and plans and shall be true to pattern in form and dimensions, free from pouring faults, sponginess, cracks, blow-holes and other defects in positions affecting their strength and value for the use intended. They shall be boldly filleted on angles and the arises shall be sharp and perfect. They shall be sand blasted or otherwise cleaned and scaled so as to present a smooth, clean, and uniform surface.

C. Standard manhole covers shall have one pick hole and the marking "Sewer" cast in their body. Four (4) anchor bolts shall be placed in the cone section to secure the manhole frame to the concrete. Bolt diameters shall be as specified by the manufacturer. All

manholes shall include a corrosion proof, shock-resistant plastic inflow protector cover as shown in the details in the Contract Plans. Standard manhole frames and covers shall be Neenah Foundry Company Model R-1642 or approved equal.

D. Frame and Cover Installations: Manhole frame and cover castings shall be installed so that the cover shall be exposed and flush with the existing pavement street surface. In no case shall the existing pavement surface be raised or lowered to meet the grade of installed manhole frame and cover castings. Where frames and covers are located in off-street areas, they shall be placed raised 12" to 18" above finished grade.

E. Grade Adjustment Ring: When a manhole is installed in sloped pavement a grade adjustment ring shall be provided to allow for a flush installation.

1. Design Requirements – The manhole grade adjustment rings shall be designed to allow final adjustment of the frame and cover to the grade established by the ENGINEER on the project drawings. The rings shall also be designed to accommodate flat or sloping surfaces to within ¼" (one quarter inch). The manhole grade adjustment system shall have a minimum 50 (fifty) year design life.

2. Performance Requirements – The manhole grade adjustment rings shall be capable of supporting the minimum requirements of ASSHTO H-25 and HS-25 and be resistant to chemicals and conditions typically associated with the manhole environment.

3. Test Report – A test report from an approved third party testing agency showing the manhole grade adjustment ring meets the minimum requirements of ASSHTO H-25 and HS-25.

4. Certification – The manufacturer of the manhole grade adjustment rings shall provide certification to the ENGINEER stating that the product meets the design life and material requirements of this specification.

5. The manhole grade adjustment rings shall be manufactured from ARPRO® Expanded Polypropylene (EPP). The rings shall be manufactured using a high compression molding process to produce a finished density of 120 g/l ((7.5 pcf).

   a. "Grade" rings shall contain upper and lower keyways (tongue and groove) for proper vertical alignment and sealing. "Grade" rings shall be available in 2, 4 and 6 inch heights.

   b. "Flat" rings shall have keyways (grooves) on the lower surface with a flat upper surface and be available in the same heights as the "Grade" ring.

   c. "Finish" rings shall have keyways (grooves) on the lower surface with a flat upper surface and be available in heights which will allow final adjustment of the frame and cover to within ¼" (one quarter inch).

d. "Angle" rings shall be keyed on the lower and upper surface of the ring for proper alignment and mating to "Finish" rings and to each other if multiple "Angle" rings are required. When required, the "Angle" ring or rings shall allow final adjustment of the frame and cover to within ¼" (one quarter inch).

6. Any adhesive or sealant used for watertight installation of the manhole grade adjustment rings shall be M-1 Structural Adhesive/Sealant or equal meeting the following specifications:

   a. ASTM C-920, Type S, Grade NS, Class 25, Uses NT, T, M, G, A and O
   b. Federal Specification TT-S-00230-C Type II, Class A
   c. .Corps of Engineers CRD-C-541, Type II, Class A
   d. Canadian Standards Board CAN 19, 13-M82
   e. AAMA 802.3-08 Type II, AAMA 803.3-08 Type I and AAMA 805.2-08 Group C

7. Acceptable Manufacturer: Pro-Ring™ by Cretex Specialty Products; or approved equal.

8. Installation and surface preparation shall be in accordance with the manufacturer's instructions.

F. Frame Sealant: The manhole frame shall be sealed to the concrete manhole section using a bed of mortar on either side of butal rubber sealant such as "Ramneck" or approved equal. In addition, the frame and cover shall be mortared to the outside of the concrete manhole section.

G. Pipe Connections: All sanitary manholes shall have factory installed flexible connections for all pipe penetrations when possible service laterals shall enter the sewerage system at manholes.

H. Cone Section: The uppermost section of the manhole shall be tapered eccentrically and shall be a minimum of three (3) feet in height. Where field connections dictate "flat top" manhole sections can be utilized with the approval of the Owner. The height of the lower section shall be at least three (3) times the inside diameter of the largest sewer pipe entering the section and in no case less than two (2) feet.

I. Joints: The joints between manhole sections shall be tongue and groove with an "O" ring rubber gasket or "STEP" section with sliding flap seal ring as manufactured by Forsheda, or approved equal conforming to ASTM designation C-443-79 or latest revision. Jointing of the precast manhole sections shall conform to the manufacturer's published recommendations and specifications. A flexible joint sealant such as a "Ramneck", or approved equal, may be required between precast manhole sections.

J. Inverts: The use of precast inverts are encouraged, however no additional compensation will be afforded the CONTRACTOR for replacements of bases caused by line relocation to avoid existing utilities or structures.

K. Manhole Landings: All manholes over 15 feet deep shall have a landing section at 10 foot intervals designed with a 24 inch opening lined up with the manhole access to allow safety lines direct access to persons in the manhole.

L. Manhole Step: Manhole steps shall be 1/2" Grade 60 Steel Reinforcement encased in copolymer polypropylene plastic, designed so that the foot will not slide off, as manufactured by M.A. Industries, Inc. or approved equal. Manhole steps shall be installed at a maximum spacing of 12 inches.

M. Openings for Pipe: Shall be precast and supplied with a flexible connection boot similar to the KOR-N-SEAL or approved equal the boot shall be of neoprene secured to the manhole by a water tight compression ring seal to provide a flexible joint. The joint shall be of neoprene rubber. The boot shall be installed in accordance with the manufacturing instructions. Manhole section joints shall be of the O-Ring gasket type with butyl rope mastic applied to the joint adjacent to the outside wall and grout applied on the inside wall as shown on the drawings.

N. Grout: Grout for inverts shall comply with Section 217 of the VDOT Road and Bridge Specifications and other Sections, as applicable.

O. Manhole Vent: Vent shall be ductile iron with flanged joints above ground with a bug screen affixed.

P. All manholes shall be lined with Raven 405 epoxy coating as manufactured by Raven Lining Systems, Inc. applied at a thickness of 80 to 100 mils. Coating shall be applied in accordance with all requirements of the manufacturer. All defects shall be repaired in accordance with the manufacturer's recommendations.

Q. All concrete utilized in manholes shall have ConShield admixture added in accordance with the manufacturer's recommendations. The precast supplier shall provide written certification that ConShield was added per manufacturer's recommendations to all acid resistant manholes delivered. This certification shall be given to the inspector prior to delivery. All sections of manhole with ConShield shall be clearly marked by the supplier at the plant so that the inspector and contractor can identify those manholes with ConShield admixture. The certification provided by the supplier shall indicate the method utilized for marking manholes with ConShield admixture at the plant.

R. Provide appurtenances as shown on the Drawings and specified in other sections.

2.12 WATERTIGHT WORK REQUIRED

A. Manholes shall be completely watertight. All leaks shall be repaired immediately with a non-shrink material, or the entire work removed and rebuilt.

B. Ground water must be kept below all parts of the masonry or concrete foundations and walls until the mortar and concrete has obtained an adequate set.

C. The number of section joints for the precast concrete structures shall be held to a minimum. The minimum height of sections shall be four (4) feet except the top section.

2.13 APPURTENANCES AND WATERPROOFING

A. Jointing mastic shall be elastic resistant formulation of plastic bituminous materials and inert filler so combined that when applied to vertical metal surface and heated to 120 degrees F, the jointing mastic will neither slump nor lose plasticity. When applied directly from the container without further fixing, the jointing mastic can be applied in an even adherent coat within the temperature range of 20 degrees to 100 degrees F.

B. The below grade vertical concrete exterior surfaces of the structures shall receive two coats of coal tar epoxy.

C. Quick setting non-shrink grout shall conform to requirements of Corps of Engineers CRD 588, octocrete, speedcrete or equal.

D. Flexible gasket between manhole and manhole frame shall be extruded rope type B, in accordance with AASHTO M-198, butyl based, 3/4 -inch diameter minimum.

E. Expansion joint filler shall be Type 1 in accordance with ASTM D-1752.

PART 3- EXECUTION

3.1 PLACEMENT

A. Manholes and distribution boxes shall be placed on a property compacted foundation after review and approval by ENGINEER and in conformance with the manufacturers recommended practices.

3.2 ARRANGEMENT

A. Manholes and distribution boxes shall be of watertight construction. In streets, manhole tops shall be set by the road grade. A maximum of 12 inches of adjustment rings may be used to reach grade. In easements a minimum of 12 inches, maximum of 24 inches of manhole shall be above grade. No adjustment rings shall be used to reach this elevation. All lift rings shall be removed and all lift holes sealed. Inverts shall be installed in a workmanlike manner, providing a smooth flow line without obstructions in accordance with the Drawings.

3.3 FINISHING

A. All exposed vertical exterior surfaces of the manhole to 1 foot below grade shall have a burlap bag (sack) rubbed finish. All joints, bung holes, lifting lug holes and pits and air holes more than a ½" deep shall be filled with mortar before applying the rubbed finish.

B. All concrete protruding above the surface shall be ground smooth before applying the rubbed finish.

C. Mortar mix for the rubbed finish shall consist of a 50-50 mix of fine sand and cement mixed to a paste consistency and applied with a burlap bag. The concrete is wet and the paste mixture is rubbed over the entire surfaces filling all pits and holes. As the mixture dries the surface shall be rubbed with the burlap to remove all excess mortar mix from the surface leaving a smooth exterior finish. Bonding agent is not required.

D. All damaged areas of the manhole top when a flat top is specified shall be repaired with a mortar mix using a bonding agent.

3.4 TESTING

A. Testing of manholes shall be in accordance with Division 2

END OF SECTION

SECTION 03600
GROUT

PART 1- GENERAL

1.1 DESCRIPTION

A. Scope:

1. Provide all labor, materials, equipment, and incidentals as shown, specified and required to furnish and install grout.

2. The types of grout include the following:

a. Non-Shrink Grout: This type of grout is to be used wherever grout is shown in the Contract Documents, unless another type is specifically referenced. Two classes of non-shrink grout (Class I and II) and areas of application are specified herein.

B. Application: The following is a listing of typical applications and the corresponding type of grout, which is to be used. Unless otherwise indicated, grouts shall be provided as listed below whether called for on the Drawings or not.

Application	Type of Grout
Base plates for pipe supports and other non-motorized equipment	Non-shrink Class II.
Machinery under 30 horsepower	Non-shrink Class II
Any application not listed above, where grout is called for on the Drawings.	Non-shrink Class II.

1.2 REFERENCES

A. Standards referenced in this Section are listed below:

1. American Concrete Institute, (ACI).

a. ACI 211.1, Practice for Selecting Proportions for Normal, Heavyweight, and Mass Concrete.
b. ACI 301, Specification for Structural Concrete (Includes ASTM Standards referred to herein).

2. American Society for Testing and Materials, (ASTM).

a. ASTM C 33, Specification for Concrete Aggregates.
b. ASTM C 109, Test Method for Compressive Strength of Hydraulic Cement Mortars (using 2 in. or 50 mm. Cube Specimens).

c. ASTM C 150, Specification for Portland Cement.
d. ASTM C 230, Specification for Flow Table for use in Tests of Hydraulic Cement.
e. ASTM C 531, Test Method for Linear Shrinkage and Coefficient of Thermal Expansion of Chemical- Resistant Mortars, Grouts, and Monolithic Surfacings.
f. ASTM C 579, Test Method for Compressive Strength of Chemical-Resistant Mortars, Grouts, Monolithic Surfacings and Polymer Concretes.
g. ASTM C 827, Test Method for Early Volume Change of Cementations Mixtures.
h. ASTM C 882, Test Method for Bond Strength of Epoxy-Resin Systems Used with Concrete.
i. ASTM C 937, Specification for Grout Fluidifier for Preplaced-Aggregate Concrete.
j. ASTM C 939, Text Method for Flow of Grout for Preplaced-Aggregate Concrete (Flow Cone Method).
k. ASTM C 1107, Specification for Packaged Dry, Hydraulic-Cement Grout (Non-shrink).
l. ASTM C 1181, Test Method for Compressive Creep of Chemical-Resistant Polymer Machinery Grouts.
m. ASTM D 696, Test Method for Coefficient of Linear Thermal Expansion of Plastics.

1.3 QUALITY ASSURANCE

A. Field Tests:

1. Compression test specimens will be taken during construction at the discretion of the Owner or Engineer from the first placement of each type of grout, and at intervals thereafter as selected by the ENGINEER to ensure continued compliance with these Specifications. The specimens will be made by the ENGINEER or its representative.

2. Compression tests and fabrication of specimens for non-shrink grout will be performed as specified in ASTM C 109 at intervals during construction as selected by the ENGINEER. A set of three specimens will be made for testing at seven days, 28 days, and each additional time period as appropriate.

3. The cost of all laboratory tests on grout will be borne by the OWNER, but CONTRACTOR shall assist the ENGINEER in obtaining specimens for testing. However, CONTRACTOR shall be charged for the cost of any additional tests and investigation on Work performed which does not conform to the requirements of the Specifications. CONTRACTOR shall supply all materials necessary for fabricating the test specimens.

1.4 SUBMITTALS

A. Submittals shall be in accordance with Division 1.

B. Shop Drawings: Submit the following:

1. For Grout Fill and Construction Joint Grout, copies of grout design mix and laboratory test reports for grout strength tests.

C. Reports and Certificates, submit for approval the following:

1. For proprietary materials, submit copies of manufacturer's certification of compliance with the specified properties for Class I, II, and III grouts.

2. Submit certified testing lab reports for ASTM C 1107, Grade B and Grade C (as revised herein) requirements for Class I and II grouts tested at a fluid consistency for temperatures of 45, 73.4, 90°F with a pot life of 30 minutes at fluid consistency.

3. Submit certification that materials conform to the Specifications requirements for nonproprietary materials.

4. Submit certifications that all grouts used on the project are free of chlorides or other chemicals causing corrosion.

5. Manufacturer's specifications and installation instructions for all proprietary materials.

1.5 PRODUCT DELIVERY, STORAGE AND HANDLING

A. Delivery of Materials: Grout materials from manufacturers shall be delivered in unopened containers and shall bear intact manufacturer's labels.

B. Storage of Materials: Grout materials shall be stored in a dry shelter and shall be protected from moisture.

PART 2- PRODUCTS

2.1 GROUTS

A. General: Non-shrink grout shall be a prepackaged, inorganic, flow able, non-gas-liberating, non-metallic, cement-based grout requiring only the addition of water. Manufacturer's instructions shall be printed on each bag or other container in which the materials are packaged. The specific formulation for each class of non-shrink grout specified herein shall be that recommended by the manufacturer for the particular application.

1. Class II, non-shrink grouts shall have a minimum 28 day compressive strength of 7,000 psi. This grout is for general purpose grouting applications as specified herein.

2. Shall meet the requirements of ASTM C 1107 and the following requirements when tested using the amount of water required to achieve the following properties:

a. Flowable consistency (140 percent flow on ASTM C 230, five drops in 30 seconds).

b. Fluid working time of at least 15 minutes.
c. Flowable for at least 30 minutes.

3. The grout when tested shall not bleed at maximum allowed water.

4. The non-shrink property is not based on a chemically generated gas or gypsum expansion.

5. Products and Manufacturer: Provide one of the following:

a. Set Grout, as manufactured by Master Builders, Inc.
b. NBEC Grout, as manufactured by Five Star Products, Inc.
c. NS Grout, as manufactured by the Euclid Chemical Company.
d. Or equal.

2.2 CONSISTENCY

A. The consistency of grouts shall be that necessary to completely fill the space to be grouted for the particular application. Dry pack consistency is such that the grout is plastic and moldable, but will not flow. Where "dry pack" is called for in the Contract Documents, it shall mean a grout of that consistency; the type of grout to be used shall be as specified herein for the particular application.

PART 3- EXECUTION

3.1 INSPECTION

A. CONTRACTOR shall examine the substrate and conditions under which grout is to be placed and notify ENGINEER, in writing, of unsatisfactory conditions. Do not proceed with the Work until unsatisfactory conditions have been corrected in a manner acceptable to ENGINEER.

3.2 INSTALLATION

A. General:

1. Place grout as shown and in accordance with manufacturer's instructions. If manufacturer's instructions conflict with these Specifications, do not proceed until ENGINEER provides clarification.

2. Manufacturers of proprietary products shall make available upon 72 hours notification the services of a qualified, full time employee to aid in assuring proper use of the product under job conditions.

3. Placing grout shall conform to manufacturer's instructions.

4. Grout shall be cured following manufacturer's instructions

END OF SECTION

SECTION 04220
CONCRETE UNIT MASONRY

PART 1 - GENERAL

1.1 RELATED DOCUMENTS

A. Drawings and general provisions of the Contract, including General and Supplementary Conditions and Division 1 Specification Sections, apply to this Section.

1.2 SUMMARY

A. This Section includes unit masonry assemblies consisting of the following:

1. Concrete masonry units (CMUs).
2. Face brick.
3. Mortar and grout.
4. Reinforcing steel.
5. Masonry joint reinforcement.
6. Ties and anchors.
7. Embedded flashing.
8. Miscellaneous masonry accessories.
9. Cavity-wall insulation.

B. Related Sections include the following:

1. Division 7 Section "Joint Sealants" for sealing control and expansion joints in unit masonry.

1.3 DEFINITIONS

A. Reinforced Masonry: Masonry containing reinforcing steel in grouted cells.

1.4 PERFORMANCE REQUIREMENTS

A. Provide unit masonry that develops the following net-area compressive strengths (f'_m) at 28 days. Determine compressive strength of masonry from average net-area compressive strengths of masonry units and mortar types (unit-strength method) according to Tables 1 and 2 in ACI 530.1/ASCE 6/TMS 602.

1. For Concrete Unit Masonry: f'_m = 1500 psi.
2. For Brick Unit Masonry: f'_m = 1500 psi.

1.5 SUBMITTALS

A. Product Data: For each type of product indicated.

B. Shop Drawings: For the following:
   1. Reinforcing Steel: Detail bending and placement of unit masonry reinforcing bars. Comply with ACI 315, "Details and Detailing of Concrete Reinforcement."

C. Samples for Initial Selection: For the following:

   1. Face brick, in the form of straps of five or more bricks.

D. Samples for Verification: For each type and color of the following:

   1. Face brick, in the form of straps of five or more bricks.

E. Material Certificates: Include statements of material properties indicating compliance with requirements including compliance with standards and type designations within standards. Provide for each type and size of the following:

   1. Masonry units.

      a. Include material test reports substantiating compliance with requirements.
      b. For bricks, include size-variation data verifying that actual range of sizes falls within specified tolerances.
      c. For exposed brick, include material test report for efflorescence according to ASTM C 67.

   2. Cementitious materials. Include brand, type, and name of manufacturer.
   3. Grout mixes. Include description of type and proportions of ingredients.
   4. Reinforcing bars.
   5. Joint reinforcement.

F. Mix Designs: For each type of mortar and grout. Include description of type and proportions of ingredients.

   1. Include test reports, per ASTM C 780, for mortar mixes required to comply with property specification.

G. Cold-Weather Procedures: Detailed description of methods, materials, and equipment to be used to comply with cold-weather requirements.

1.6 QUALITY ASSURANCE

A. Source Limitations for Masonry Units: Obtain exposed masonry units of a uniform texture and color, or a uniform blend within the ranges accepted for these characteristics, through one source from a single manufacturer for each product required.

B. Source Limitations for Mortar Materials: Obtain mortar ingredients of a uniform quality, including color for exposed masonry, from a single manufacturer for each cementitious component and from one source or producer for each aggregate.

1.7 DELIVERY, STORAGE, AND HANDLING

A. Store masonry units on elevated platforms in a dry location. If units are not stored in an enclosed location, cover tops and sides of stacks with waterproof sheeting, securely tied. If units become wet, do not install until they are dry.

B. Store cementitious materials on elevated platforms, under cover, and in a dry location. Do not use cementitious materials that have become damp.

C. Store aggregates where grading and other required characteristics can be maintained and contamination avoided.

D. Deliver preblended, dry mortar mix in moisture-resistant containers designed for lifting and emptying into dispensing silo. Store preblended, dry mortar mix in delivery containers on elevated platforms, under cover, and in a dry location or in a metal dispensing silo with weatherproof cover.

E. Store masonry accessories, including metal items, to prevent corrosion and accumulation of dirt and oil.

1.8 PROJECT CONDITIONS

A. Protection of Masonry: During construction, cover tops of walls, projections, and sills with waterproof sheeting at end of each day's work. Cover partially completed masonry when construction is not in progress.

1. Extend cover a minimum of 24 inches down both sides and hold cover securely in place.
2. Where 1 wythe of multiwythe masonry walls is completed in advance of other wythes, secure cover a minimum of 24 inches down face next to unconstructed wythe and hold cover in place.

B. Do not apply uniform floor or roof loads for at least 12 hours and concentrated loads for at least 3 days after building masonry walls or columns.

C. Stain Prevention: Prevent grout, mortar, and soil from staining the face of masonry to be left exposed or painted. Immediately remove grout, mortar, and soil that come in contact with such masonry.

1. Protect base of walls from rain-splashed mud and from mortar splatter by spreading coverings on ground and over wall surface.
2. Protect sills, ledges, and projections from mortar droppings.
3. Protect surfaces of window and door frames, as well as similar products with painted and integral finishes, from mortar droppings.
4. Turn scaffold boards near the wall on edge at the end of each day to prevent rain from splashing mortar and dirt onto completed masonry.

D. Cold-Weather Requirements: Do not use frozen materials or materials mixed or coated with ice or frost. Do not build on frozen substrates. Remove and replace unit masonry damaged by frost or by freezing conditions. Comply with cold-weather construction requirements contained in ACI 530.1/ASCE 6/TMS 602.

1. Cold-Weather Cleaning: Use liquid cleaning methods only when air temperature is 40 deg F and above and will remain so until masonry has dried, but not less than 7 days after completing cleaning.

E. Hot-Weather Requirements: Comply with hot-weather construction requirements contained in ACI 530.1/ASCE 6/TMS 602.

PART 2 - PRODUCTS

2.1 MANUFACTURERS

A. In other Part 2 articles where titles below introduce lists, the following requirements apply to product selection:

1. Products: Subject to compliance with requirements, provide one of the products specified.
2. Manufacturers: Subject to compliance with requirements, provide products by one of the manufacturers specified.

2.2 MASONRY UNITS, GENERAL

A. Defective Units: Referenced masonry unit standards may allow a certain percentage of units to exceed tolerances and to contain chips, cracks, or other defects exceeding limits stated in the standard. Do not uses units where such defects, including dimensions that vary from specified dimensions by more than stated tolerances, will be exposed in the completed Work or will impair the quality of completed masonry.

2.3 CONCRETE MASONRY UNITS (CMUs)

A. Shapes: Provide shapes indicated and as follows:

1. Provide special shapes for lintels, corners, jambs, sashes, movement joints, headers, bonding, and other special conditions.
2. Provide bullnose units for outside corners, unless otherwise indicated.

B. Concrete Masonry Units: ASTM C 90.

1. Weight Classification: Lightweight, unless otherwise indicated.
2. Size (Width): 8" x 16" nominal face dimensions. Manufactured to dimensions 3/8 inch less than nominal dimensions.
3. Exposed Faces: Provide color and texture matching the range represented by Architect's sample.

2.4 CONCRETE AND MASONRY LINTELS

A. General: Provide either concrete or masonry lintels, at Contractor's option, complying with requirements below.

B. Concrete Lintels: Precast units made from concrete matching concrete masonry units in color, texture, and compressive strength and with reinforcing bars indicated or required to support loads indicated. Cure precast lintels by same method used for concrete masonry units.

a. Course with masonry and scored at 16" o.c.

C. Masonry Lintels: Prefabricated or built-in-place masonry lintels made from bond beam concrete masonry units with reinforcing bars placed as indicated and filled with coarse grout. Cure precast lintels before handling and installing. Temporarily support built-in-place lintels until cured.

a. Course with masonry and scored at 16" o.c.

2.5 BRICK

A. General: Provide shapes indicated and as follows:

1. Provide special shapes for applications where stretcher units cannot accommodate special conditions, including those at corners, movement joints, bond beams, sashes, and lintels.
2. Provide special shapes for applications requiring brick of size, form, color, and texture on exposed surfaces that cannot be produced by sawing.
3. Provide special shapes for applications where shapes produced by sawing would result in sawed surfaces being exposed to view.
4. Provide special shapes as indicated on Drawings:

B. Face Brick: ASTM C 216, Grade SW, Type FBS.

1. Initial Rate of Absorption: Less than 30 g/30 sq. in. per minute when tested per ASTM C 67.
2. Efflorescence: Provide brick that has been tested according to ASTM C 67 and is rated "not effloresced."
3. Provide face brick as follows:

a. Match existing brick in size, color, and texture.

2.6 MORTAR AND GROUT MATERIALS

A. Masonry Cement: ASTM C 91.

1. Products:

a. Capital Materials Corporation; Flamingo Color Masonry Cement.
b. Essroc, Italcementi Group; Brixment or Velvet.
c. Lafarge North America Inc.; Magnolia Masonry Cement.
d. Lehigh Cement Company; Lehigh Masonry Cement.

B. Aggregate for Mortar: ASTM C 144.

1. For mortar that is exposed to view, use washed aggregate consisting of natural sand or crushed stone.

2. For joints less than 1/4 inch thick, use aggregate graded with 100 percent passing the No. 16 sieve.

C. Aggregate for Grout: ASTM C 404.

D. Cold-Weather Admixture: Nonchloride, noncorrosive, accelerating admixture complying with ASTM C 494/C 494M, Type C, and recommended by manufacturer for use in masonry mortar of composition indicated.

E. Water: Potable.

2.7 REINFORCEMENT

A. Uncoated Steel Reinforcing Bars: ASTM A 615/A 615M or ASTM A 996/A 996M, Grade 60.

B. Masonry Joint Reinforcement, General: ASTM A 951.

1. Interior Walls: Mill-galvanized, carbon steel.
2. Exterior Walls: Hot-dip galvanized, carbon steel.
3. Wire Size for Side Rods: W1.7 or 0.148-inch diameter.
4. Wire Size for Cross Rods: W1.7 or 0.148-inch diameter.
5. Spacing of Cross Rods, Tabs, and Cross Ties: Not more than 16 inches o.c.
6. Provide in lengths of not less than 10 feet, with prefabricated corner and tee units.

C. Masonry Joint Reinforcement for Single-Wythe Masonry: Either ladder or truss type with single pair of side rods.

D. Masonry Joint Reinforcement for Multiwythe Masonry:

1. Ladder type with 1 side rod at each face shell of hollow masonry units more than 4 inches in width, plus 1 side rod at each wythe of masonry 4 inches or less in width.

2.8 TIES AND ANCHORS

A. Materials: Provide ties and anchors specified in subsequent paragraphs that are made from materials that comply with eight subparagraphs below, unless otherwise indicated.

1. Mill-Galvanized, Carbon-Steel Wire: ASTM A 82; with ASTM A 641/A 641M, Class 1 coating.
2. Hot-Dip Galvanized, Carbon-Steel Wire: ASTM A 82; with ASTM A 153/A 153M, Class B-2 coating.
3. Stainless-Steel Wire: ASTM A 580/A 580M, Type 304.
4. Galvanized Steel Sheet: ASTM A 653/A 653M, Commercial Steel, G60 zinc coating.
5. Steel Sheet, Galvanized after Fabrication: ASTM A 1008/A 1008M, Commercial Steel, hot-dip galvanized after fabrication to comply with ASTM A 153/A 153M.
6. Stainless-Steel Sheet: ASTM A 666, Type 304.
7. Steel Plates, Shapes, and Bars: ASTM A 36/A 36M.
8. Stainless Steel bars: ASTM A 276 or ASTM a 666, Type 304.

B. Wire Ties, General: Unless otherwise indicated, size wire ties to extend at least halfway through veneer but with at least 5/8-inch cover on outside face. Outer ends of wires are bent 90 degrees and extend 2 inches parallel to face of veneer.

C. Individual Wire Ties: Rectangular units with closed ends and not less than 4 inches wide.

1. Wire: Fabricate from 3/16-inch-diameter, hot-dip galvanized steel Mill-galvanized wire ties may be used in interior walls, unless otherwise indicated.

D. Adjustable Anchors for Connecting to Structure: Provide anchors that allow vertical or horizontal adjustment but resist tension and compression forces perpendicular to plane of wall.

1. Anchor Section for Welding to Steel Frame: Crimped 1/4-inch- diameter, hot-dip galvanized steel wire. Mill-galvanized wire may be used at interior walls, unless otherwise indicated.
2. Tie Section for Steel Frame: Triangular-shaped wire tie, sized to extend within 1 inch of masonry face, made from 0.188-inch-diameter, hot-dip galvanized steel wire. Mill-galvanized wire may be used at interior walls, unless otherwise indicated.
3. Connector Section for Concrete: Dovetail tabs for inserting into dovetail slots in concrete and attached to tie section; formed from 0.053-inch- thick, steel sheet, galvanized after fabrication
4. Tie Section for Concrete: Corrugated metal ties with dovetail tabs for inserting into dovetail slots in concrete and sized to extend to within 1 inch of masonry face.

2.9 EMBEDDED FLASHING MATERIALS

A. Flexible Flashing: For flashing not exposed to the exterior, use one of the following, unless otherwise indicated:

1. Elastomeric Thermoplastic Flashing: Composite flashing product consisting of a polyester-reinforced ethylene interpolymer alloy as follows:

a. Monolithic Sheet: Elastomeric thermoplastic flashing, 0.040 inch thick.

1) Color: Black.

b. Accessories: Provide preformed corners, end dams, other special shapes, and seaming materials produced by flashing manufacturer.

c. Available Products:

2. EPDM Flashing: Sheet flashing product made from ethylene-propylene-diene terpolymer, complying with ASTM D 4637, 0.040 inch thick.

a. Available Products:

1) Carlisle Coatings & Waterproofing; Pre-Kleened EPDM Thru-Wall Flashing.
2) Firestone Building Products; FlashGuard.

B. Adhesives, Primers, and Seam Tapes for Flashings: Flashing manufacturer's standard products or products recommended by flashing manufacturer for bonding flashing sheets to each other and to substrates.

2.10 MISCELLANEOUS MASONRY ACCESSORIES

A. Compressible Filler: Premolded filler strips complying with ASTM D 1056, Grade 2A1; compressible up to 35 percent; of width and thickness indicated; formulated from neoprene, urethane, or PVC.

B. Preformed Control-Joint Gaskets: Made from styrene-butadiene-rubber compound, complying with ASTM D 2000, Designation M2AA-805 or PVC, complying with ASTM D 2287, Type PVC-65406 and designed to fit standard sash block and to maintain lateral stability in masonry wall; size and configuration as indicated.

C. Bond-Breaker Strips: Asphalt-saturated, organic roofing felt complying with ASTM D 226, Type I (No. 15 asphalt felt).

D. Weep/Vent Products: Use the following, unless otherwise indicated:

1. Wicking Material: Absorbent rope, made from cotton or UV-resistant synthetic fiber, 1/4 to 3/8 inch in diameter, in length required to produce 2-inch exposure on exterior and 18 inches in cavity between wythes. Use only for weeps.

2.11 CAVITY-WALL INSULATION

A. Extruded-Polystyrene Board Insulation: ASTM C 578, Type IV, closed-cell product extruded with an integral skin.

1. Thickness: 2 inches unless noted otherwise.

B. Adhesive: Type recommended by insulation board manufacturer for application indicated.

2.12 MASONRY CLEANERS

A. Proprietary Acidic Cleaner: Manufacturer's standard-strength cleaner designed for removing mortar/grout stains, efflorescence, and other new construction stains from new masonry without discoloring or damaging masonry surfaces. Use product expressly approved for intended use by cleaner manufacturer and manufacturer of masonry units being cleaned.

1. Available Manufacturers:

a. Diedrich Technologies, Inc.
b. EaCo Chem, Inc.

2.13 MORTAR AND GROUT MIXES

A. General: Do not use admixtures, including pigments, air-entraining agents, accelerators, retarders, water-repellent agents, antifreeze compounds, or other admixtures, unless otherwise indicated.

1. Do not use calcium chloride in mortar or grout.
2. Add cold-weather admixture (if used) at same rate for all mortar that will be exposed to view, regardless of weather conditions, to ensure that mortar color is consistent.

B. Mortar for Unit Masonry: Comply with ASTM C 270, Proportion Specification. Provide the following types of mortar for applications stated unless another type is indicated or needed to provide required compressive strength of masonry.

1. For masonry below grade or in contact with earth, use Type S.
2. For reinforced masonry, use Type S.
3. For exterior, above-grade, load-bearing and non-load-bearing walls and parapet walls; for interior load-bearing walls; for interior non-load-bearing partitions; and for other applications where another type is not indicated, use Type N.
4. For interior non-load-bearing partitions, Type O may be used instead of Type N.

C. Grout for Unit Masonry: Comply with ASTM C 476.

1. Use grout of type indicated or, if not otherwise indicated, of type (fine or coarse) that will comply with Table 1.15.1 in ACI 530.1/ASCE 6/TMS 602 for dimensions of grout spaces and pour height.
2. Provide grout with a slump of 8 to 11 inches as measured according to ASTM C 143/C 143M.

PART 3 - EXECUTION

3.1 EXAMINATION

A. Examine conditions, with Installer present, for compliance with requirements for installation tolerances and other conditions affecting performance of work.

1. For the record, prepare written report, endorsed by Installer, listing conditions detrimental to performance of work.
2. Verify that foundations are within tolerances specified.
3. Verify that reinforcing dowels are properly placed.

B. Before installation, examine rough-in and built-in construction for piping systems to verify actual locations of piping connections.

C. Proceed with installation only after unsatisfactory conditions have been corrected.

3.2 INSTALLATION, GENERAL

A. Thickness: Build cavity and composite walls and other masonry construction to full thickness shown. Build single-wythe walls to actual widths of masonry units, using units of widths indicated.

B. Build chases and recesses to accommodate items specified in this and other Sections.

C. Leave openings for equipment to be installed before completing masonry. After installing equipment, complete masonry to match the construction immediately adjacent to opening.

D. Use full-size units without cutting if possible. If cutting is required to provide a continuous pattern or to fit adjoining construction, cut units with motor-driven saws; provide clean, sharp, unchipped edges. Allow units to dry before laying unless wetting of units is specified. Install cut units with cut surfaces and, where possible, cut edges concealed.

E. Select and arrange units for exposed unit masonry to produce a uniform blend of colors and textures.

1. Mix units from several pallets or cubes as they are placed.

F. Matching Existing Masonry: Match coursing, bonding, color, and texture of existing masonry.

G. Wetting of Brick: Wet brick before laying if initial rate of absorption exceeds 30 g/30 sq. in. per minute when tested per ASTM C 67. Allow units to absorb water so they are damp but not wet at time of laying.

H. Comply with construction tolerances in ACI 530.1/ASCE 6/TMS 602 and with the following:

1. For conspicuous vertical lines, such as external corners, door jambs, reveals, and expansion and control joints, do not vary from plumb by more than 1/8 inch in 10 feet, 1/4 inch in 20 feet, or 1/2 inch maximum.
2. For vertical alignment of exposed head joints, do not vary from plumb by more than 1/4 inch in 10 feet, or 1/2 inch maximum.
3. For conspicuous horizontal lines, such as lintels, sills, parapets, and reveals, do not vary from level by more than 1/8 inch in 10 feet, 1/4 inch in 20 feet, or 1/2 inch maximum.
4. For exposed bed joints, do not vary from thickness indicated by more than plus or minus 1/8 inch, with a maximum thickness limited to 1/2 inch. Do not vary from bed-joint thickness of adjacent courses by more than 1/8 inch.
5. For exposed head joints, do not vary from thickness indicated by more than plus or minus 1/8 inch. Do not vary from adjacent bed-joint and head-joint thicknesses by more than 1/8 inch.
6. For faces of adjacent exposed masonry units, do not vary from flush alignment by more than 1/16 inch except due to warpage of masonry units within tolerances specified for warpage of units.
7. For exposed bed joints and head joints of stacked bond, do not vary from a straight line by more than 1/16 inch from one masonry unit to the next.

3.3 LAYING MASONRY WALLS

A. Lay out walls in advance for accurate spacing of surface bond patterns with uniform joint thicknesses and for accurate location of openings, movement-type joints, returns, and offsets. Avoid using less-than-half-size units, particularly at corners, jambs, and, where possible, at other locations.

B. Bond Pattern for Exposed Masonry: Unless otherwise indicated, lay exposed masonry in running bond; do not use units with less than nominal 4-inch horizontal face dimensions at corners or jambs.

C. Lay concealed masonry with all units in a wythe in running bond or bonded by lapping not less than 2 inches. Bond and interlock each course of each wythe at corners. Do not use units with less than nominal 4-inch horizontal face dimensions at corners or jambs.

D. Stopping and Resuming Work: Stop work by racking back units in each course from those in course below; do not tooth. When resuming work, clean masonry surfaces that are to receive mortar, remove loose masonry units and mortar, and wet brick if required before laying fresh masonry.

E. Built-in Work: As construction progresses, build in items specified in this and other Sections. Fill in solidly with masonry around built-in items.

F. Fill space between steel frames and masonry solidly with mortar, unless otherwise indicated.

G. Where built-in items are to be embedded in cores of hollow masonry units, place a layer of metal lath, wire mesh, or plastic mesh in the joint below and rod mortar or grout into core.

H. Fill cores in hollow concrete masonry units with grout 24 inches under bearing plates, beams, lintels, posts, and similar items, unless otherwise indicated.

I. Build non-load-bearing interior partitions full height of story to underside of solid floor or roof structure above, unless otherwise indicated.

1. Install compressible filler in joint between top of partition and underside of structure above.
2. At fire-rated partitions, treat joint between top of partition and underside of structure above to comply with Division 7 Section "Fire-Resistive Joint Systems."

3.4 MORTAR BEDDING AND JOINTING

A. Lay hollow concrete masonry units as follows:

1. With face shells fully bedded in mortar and with head joints of depth equal to bed joints.
2. With webs fully bedded in mortar in all courses of piers, columns, and pilasters.
3. With webs fully bedded in mortar in grouted masonry, including starting course on footings.
4. With entire units, including areas under cells, fully bedded in mortar at starting course on footings where cells are not grouted.

B. Lay solid masonry units with completely filled bed and head joints; butter ends with sufficient mortar to fill head joints and shove into place. Do not deeply furrow bed joints or slush head joints.

C. Tool exposed joints slightly concave when thumbprint hard, using a jointer larger than joint thickness, unless otherwise indicated.

1. For glazed masonry units, use a nonmetallic jointer 3/4 inch or more in width.

D. For exterior brick joints provide a joint to match existing.

E. Cut joints flush for masonry walls to receive plaster or other direct-applied finishes (other than paint), unless otherwise indicated.

3.5 COMPOSITE MASONRY

A. Bond wythes of composite masonry together using the following method:

1. Masonry Joint Reinforcement: Installed in horizontal mortar joints.

a. Where bed joints of both wythes align, use ladder-type reinforcement extending across both wythes.
b. Where bed joints of wythes do not align, use adjustable (two-piece) type reinforcement with continuous horizontal wire in facing wythe attached to ties.

B. Collar Joints: Solidly fill collar joints by parging face of first wythe that is laid and shoving units of other wythe into place.

C. Collar Joints in Clay Tile Masonry: After each course is laid, fill the vertical, longitudinal joint between wythes solidly with mortar at exterior walls, except cavity walls , and interior walls and partitions.

D. Corners: Provide interlocking masonry unit bond in each wythe and course at corners, unless otherwise indicated.

1. Provide continuity with masonry joint reinforcement at corners by using prefabricated L-shaped units as well as masonry bonding.

E. For exterior brick joints provide joint to match existing.

F. Intersecting and Abutting Walls: Unless vertical expansion or control joints are shown at juncture, bond walls together as follows:

1. Provide continuity with masonry joint reinforcement by using prefabricated T-shaped units.

3.6 CAVITY WALLS

A. Bond wythes of cavity walls together using the following method:

1. Masonry Joint Reinforcement: Installed in horizontal mortar joints.

    a. Where bed joints of both wythes align, use ladder-type reinforcement extending across both wythes.
    b. Where bed joints of wythes do not align, use adjustable (two-piece) type reinforcement with continuous horizontal wire in facing wythe attached to ties.

B. Keep cavities clean of mortar droppings and other materials during construction. Bevel beds away from cavity, to minimize mortar protrusions into cavity. Do not attempt to trowel or remove mortar fins protruding into cavity.

C. Installing Cavity-Wall Insulation: Place small dabs of adhesive, spaced approximately 12 inches o.c. both ways, on inside face of insulation boards, or attach with plastic fasteners designed for this purpose. Fit courses of insulation between wall ties and other confining obstructions in cavity, with edges butted tightly both ways. Press units firmly against inside wythe of masonry or other construction as shown.

    1. Fill cracks and open gaps in insulation with crack sealer compatible with insulation and masonry.

3.7 MASONRY JOINT REINFORCEMENT

A. General: Install entire length of longitudinal side rods in mortar with a minimum cover of 5/8 inch on exterior side of walls, 1/2 inch elsewhere. Lap reinforcement a minimum of 6 inches.

    1. Space reinforcement not more than 16 inches o.c.
    2. Space reinforcement not more than 8 inches o.c. in foundation walls and parapet walls.
    3. Provide reinforcement not more than 8 inches above and below wall openings and extending 12 inches beyond openings.

        a. Reinforcement above is in addition to continuous reinforcement.

B. Interrupt joint reinforcement at control and expansion joints, unless otherwise indicated.

C. Provide continuity at wall intersections by using prefabricated T-shaped units.

D. Provide continuity at corners by using prefabricated L-shaped units.

E. Cut and bend reinforcing units as directed by manufacturer for continuity at returns, offsets, column fireproofing, pipe enclosures, and other special conditions.

3.8 ANCHORING MASONRY TO STRUCTURAL MEMBERS

A. Anchor masonry to structural members where masonry abuts or faces structural members to comply with the following:

    1. Provide an open space not less than 1/2 inch in width between masonry and structural member, unless otherwise indicated. Keep open space free of mortar and other rigid materials.

2. Anchor masonry to structural members with anchors embedded in masonry joints and attached to structure.
3. Space anchors as indicated, but not more than 24 inches o.c. vertically and 36 inches o.c. horizontally.

3.9 CONTROL AND EXPANSION JOINTS

A. General: Install control and expansion joint materials in unit masonry as masonry progresses. Do not allow materials to span control and expansion joints without provision to allow for in-plane wall or partition movement.

B. Form control joints in concrete masonry as follows:

1. Install preformed control-joint gaskets designed to fit standard sash block.

C. Form expansion joints in brick made from clay or shale as follows:

1. Build in compressible joint fillers where indicated.

3.10 LINTELS

A. Install steel lintels where indicated.

B. Provide concrete or masonry lintels where shown and where openings of more than 12 inches for brick-size units and 24 inches for block-size units are shown without structural steel or other supporting lintels.

C. Provide minimum bearing of 8 inches at each jamb, unless otherwise indicated.

3.11 FLASHING, WEEP HOLES, CAVITY DRAINAGE, AND VENTS

A. General: Install embedded flashing and weep holes in masonry at shelf angles, lintels, ledges, other obstructions to downward flow of water in wall, and where indicated. Install flashing as follows, unless otherwise indicated:

1. Prepare masonry surfaces so they are smooth and free from projections that could puncture flashing. Where flashing is within mortar joint, place through-wall flashing on sloping bed of mortar and cover with mortar. Before covering with mortar, seal penetrations in flashing with adhesive, sealant, or tape as recommended by flashing manufacturer.
2. At multiwythe masonry walls, including cavity walls, extend flashing through outer wythe, turned up a minimum of 8 inches, and through inner wythe to within 1/2 inch of the interior face of wall in exposed masonry. Where interior face of wall is to receive furring or framing, carry flashing completely through inner wythe and turn flashing up approximately 2 inches on interior face.
3. At lintels, extend flashing a minimum of 6 inches into masonry at each end. At heads and sills, extend flashing 6 inches at ends and turn up not less than 2 inches to form end dams.

4. Cut flexible flashing off flush with face of wall after masonry wall construction is completed.

B. Install reglets and nailers for flashing and other related construction where they are shown to be built into masonry.

C. Install weep holes in head joints in exterior wythes of first course of masonry immediately above embedded flashing and as follows:

1. Use wicking material to form weep holes above flashing under brick sills. Turn wicking down at lip of sill to be as inconspicuous as possible.
2. Space weep holes formed from wicking material 16 inches o.c.
3. Trim wicking material flush with outside face of wall after mortar has set.

3.12 REINFORCED UNIT MASONRY INSTALLATION

A. Temporary Formwork and Shores: Construct formwork and shores as needed to support reinforced masonry elements during construction.

1. Construct formwork to provide shape, line, and dimensions of completed masonry as indicated. Make forms sufficiently tight to prevent leakage of mortar and grout. Brace, tie, and support forms to maintain position and shape during construction and curing of reinforced masonry.
2. Do not remove forms and shores until reinforced masonry members have hardened sufficiently to carry their own weight and other temporary loads that may be placed on them during construction.

B. Placing Reinforcement: Comply with requirements in ACI 530.1/ASCE 6/TMS 602.

C. Grouting: Do not place grout until entire height of masonry to be grouted has attained enough strength to resist grout pressure.

1. Comply with requirements in ACI 530.1/ASCE 6/TMS 602 for cleanouts and for grout placement, including minimum grout space and maximum pour height.
2. Limit height of vertical grout pours to not more than 60 inches.

3.13 REPAIRING, POINTING, AND CLEANING

A. Remove and replace masonry units that are loose, chipped, broken, stained, or otherwise damaged or that do not match adjoining units. Install new units to match adjoining units; install in fresh mortar, pointed to eliminate evidence of replacement.

B. Pointing: During the tooling of joints, enlarge voids and holes, except weep holes, and completely fill with mortar. Point up joints, including corners, openings, and adjacent construction, to provide a neat, uniform appearance. Prepare joints for sealant application, where indicated.

C. In-Progress Cleaning: Clean unit masonry as work progresses by dry brushing to remove mortar fins and smears before tooling joints.

D. Final Cleaning: After mortar is thoroughly set and cured, clean exposed masonry as follows:

1. Remove large mortar particles by hand with wooden paddles and nonmetallic scrape hoes or chisels.
2. Test cleaning methods on sample wall panel; leave one-half of panel uncleaned for comparison purposes. Obtain Architect's approval of sample cleaning before proceeding with cleaning of masonry.
3. Protect adjacent stone and nonmasonry surfaces from contact with cleaner by covering them with liquid strippable masking agent or polyethylene film and waterproof masking tape.
4. Wet wall surfaces with water before applying cleaners; remove cleaners promptly by rinsing surfaces thoroughly with clear water.
5. Clean masonry with a proprietary acidic cleaner applied according to manufacturer's written instructions.
6. Clean concrete masonry by cleaning method indicated in NCMA TEK 8-2A applicable to type of stain on exposed surfaces.
7.

3.14 FIELD QUALITY CONTROL

A. Testing and Inspecting: Owner shall engage a Special Inspector and a qualified independent testing and inspection agency to perform inspections and prepare reports Allow inspectors access to scaffolding and work areas, as needed to perform inspections.. Retesting of materials that fail to meet specified requirements shall be done at Contractor's expense.

B. Inspections: Level 2 special inspections according to the "International Building Code."

1. Begin masonry construction only after inspectors have verified proportions of site-prepared mortar.
2. Place grout only after inspectors have verified compliance of grout spaces and of grades, sizes, and locations of reinforcement.
3. Place grout only after inspectors have verified proportions of site-prepared grout.

C. Testing Prior to Construction: One set of tests.

D. Testing Frequency: One set of tests for each 5000 sq. ft of wall area or portion thereof.

E. Concrete Masonry Unit Test: For each type of unit provided, according to ASTM C 140 for compressive strength.

F. Mortar Aggregate Ratio Test (Proportion Specification): For each mix provided, according to ASTM C 780.

G. Mortar Test (Property Specification): For each mix provided, according to ASTM C 780. Test mortar for compressive strength.

H. Grout Test (Compressive Strength): For each mix provided, according to ASTM C 1019.

3.15 MASONRY WASTE DISPOSAL

A. Salvageable Materials: Unless otherwise indicated, excess masonry materials are Contractor's property. At completion of unit masonry work, remove from Project site.

END OF SECTION

SECTION 05120
STRUCTURAL STEEL

PART 1 - GENERAL

1.1 RELATED DOCUMENTS

A. Drawings and general provisions of the CONTRACT, including General and Supplementary Conditions and Division 1 Specification Sections, apply to this Section.

1.2 SUMMARY

A. This Section includes the following:

1. Structural steel.
2. Grout.

1.3 SUBMITTALS

A. Product Data: For each type of product indicated.

B. Shop Drawings: Show fabrication of structural-steel components.

1. Include details of cuts, connections, splices, camber, holes, and other pertinent data.
2. Include embedment drawings.
3. Indicate welds by standard AWS symbols, distinguishing between shop and field welds, and show size, length, and type of each weld.
4. Indicate type, size, and length of bolts, distinguishing between shop and field bolts.

C. Welding certificates.

D. Mill Test Reports: Signed by manufacturers certifying that the following products comply with requirements:

1. Nonshrink grout.

E. Source quality-control test reports.

1.4 QUALITY ASSURANCE

A. Installer Qualifications: Engage an experienced Installer who has completed structural steel work similar in material, design, and extent to that indicated for this PROJECT and with a record of successful in-service performance.

B. Fabricator Qualifications: Engage a firm experienced in fabricating structural steel similar to that indicated for this PROJECT and with a record of successful in-service performance, as well as sufficient production capacity to fabricate structural steel without delaying the WORK.

C. Welding: Qualify procedures and personnel according to AWS D1.1, "Structural Welding Code--Steel".

D. Comply with applicable provisions of the following specifications and documents:

1. AISC 303.
2. AISC 360.
3. RCSC's "Specification for Structural Joints Using ASTM A 325 or A 490 Bolts".

1.5 DELIVERY, STORAGE, AND HANDLING

A. Store materials to permit easy access for inspection and identification. Keep steel members off ground and spaced by using pallets, dunnage, or other supports and spacers. Protect steel members and packaged materials from erosion and deterioration.

1. Store fasteners in a protected place. Clean and relubricate bolts and nuts that become dry or rusty before use.
2. Do not store materials on structure in a manner that might cause distortion, damage, or overload to members or supporting structures. Repair or replace damaged materials or structures as directed.

1.6 COORDINATION

A. Furnish anchorage items to be embedded in or attached to other construction without delaying the WORK. Provide setting diagrams, sheet metal templates, instructions, and directions for installation.

PART 2 - PRODUCTS

2.1 STRUCTURAL-STEEL MATERIALS

A. W-Shapes: ASTM A 992, Grade 50.

B. Channels, Angles, Plate, and Bar: ASTM A 36.

C. Cold-Formed Hollow Structural Sections: ASTM A 500, Grade B, structural tubing.

D. Steel Pipe: ASTM A 53, Type E or S, Grade B.

E. Welding Electrodes: Comply with AWS requirements.

2.2 BOLTS, CONNECTORS, AND ANCHORS

A. High-Strength Bolts, Nuts, and Washers: ASTM A 325, Type 1, heavy hex steel structural bolts; ASTM A 563 heavy hex carbon-steel nuts; and ASTM F 436 hardened carbon-steel washers.

B. Shear Connectors: ASTM A 108, Grades 1015 through 1020, headed-stud type, cold-finished carbon steel; AWS D1.1, Type B.

C. Unheaded Anchor Rods: ASTM F 1554, Grade 36.

1. Configuration: As indicated.
2. Nuts: ASTM A 563 heavy hex carbon steel.
3. Plate Washers: ASTM A 36 carbon steel.
4. Washers: ASTM F 436 hardened carbon steel.

D. Headed Anchor Rods: ASTM F 1554, Grade 36.

1. Nuts: ASTM A 563 heavy hex carbon steel.
2. Plate Washers: ASTM A 36 carbon steel.
3. Washers: ASTM F 436 hardened carbon steel.

2.3 PRIMER

A. Primer: None.

B. Galvanizing Repair Paint: ASTM A 780.

2.4 GROUT

A. Nonmetallic, Shrinkage-Resistant Grout: ASTM C 1107, factory-packaged, nonmetallic aggregate grout, noncorrosive, nonstaining, mixed with water to consistency suitable for application and a 30-minute working time.

2.5 FABRICATION

A. Structural Steel: Fabricate and assemble in shop to greatest extent possible. Fabricate according to AISC's "Code of Standard Practice for Steel Buildings and Bridges" and AISC's "Specification for Structural Steel Buildings--Allowable Stress Design and Plastic Design".

1. Camber structural-steel members where indicated.
2. Identify high-strength structural steel according to ASTM A 6 and maintain markings until structural steel has been erected.
3. Mark and match-mark materials for field assembly.
4. Complete structural-steel assemblies, including welding of units, before starting shop-priming operations.

B. Thermal Cutting: Perform thermal cutting by machine to greatest extent possible.

1. Plane thermally cut edges to be welded to comply with requirements in AWS D1.1.

C. Bolt Holes: Cut, drill, or punch standard bolt holes perpendicular to metal surfaces.

D. Finishing: Accurately finish ends of columns and other members transmitting bearing loads.

E. Cleaning: Clean and prepare steel surfaces that are to remain unpainted according to SSPC-SP 1, "Solvent Cleaning" or SSPC-SP 2, "Hand Tool Cleaning".

F. Shear Connectors: Prepare steel surfaces as recommended by manufacturer of shear connectors. Use automatic end welding of headed-stud shear connectors according to AWS D1.1 and manufacturer's written instructions.

G. Holes: Provide holes required for securing other work to structural steel and for passage of other work through steel framing members.

1. Cut, drill, or punch holes perpendicular to steel surfaces. Do not thermally cut bolt holes or enlarge holes by burning.
2. Base-Plate Holes: Cut, drill, mechanically thermal cut, or punch holes perpendicular to steel surfaces.
3. Weld threaded nuts to framing and other specialty items indicated to receive other work.
   a. .

2.6 GALVANIZING

A. Hot-Dip Galvanized Finish: Apply zinc coating by the hot-dip process to structural steel according to ASTM A 123.

1. Fill vent holes and grind smooth after galvanizing.
2. Galvanize steel lintels and masonry shelf angles located in exterior walls and other locations where indicated.

PART 3 - EXECUTION

3.1 EXAMINATION

A. Verify elevations of concrete- and masonry-bearing surfaces and locations of anchor rods, bearing plates, and other embedments, with steel erector present, for compliance with requirements.

B. Proceed with installation only after unsatisfactory conditions have been corrected.

3.2 PREPARATION

A. Provide temporary shores, guys, braces, and other supports during erection to keep structural steel secure, plumb, and in alignment against temporary construction loads and loads equal in intensity to design loads. Remove temporary supports when permanent structural steel, connections, and bracing are in place, unless otherwise indicated.

3.3 ERECTION

A. Set structural steel accurately in locations and to elevations indicated and according to AISC's "Code of Standard Practice for Steel Buildings and Bridges" and "Specification for Structural Steel Buildings--Allowable Stress Design and Plastic Design".

B. Base and Bearing Plates: Clean concrete- and masonry-bearing surfaces of bond-reducing materials, and roughen surfaces prior to setting base and bearing plates. Clean bottom surface of base and bearing plates.

1. Set base and bearing plates for structural members on wedges, shims, or setting nuts as required.
2. Weld plate washers to top of base plate.
3. Snug-tighten anchor rods after supported members have been positioned and plumbed. Do not remove wedges or shims but, if protruding, cut off flush with edge of base or bearing plate before packing with grout.
4. Promptly pack grout solidly between bearing surfaces and base or bearing plates so no voids remain. Neatly finish exposed surfaces; protect grout and allow to cure. Comply with manufacturer's written installation instructions for shrinkage-resistant grouts.

C. Align and adjust various members forming part of complete frame or structure before permanently fastening. Before assembly, clean bearing surfaces and other surfaces that will be in permanent contact with members. Perform necessary adjustments to compensate for discrepancies in elevations and alignment. Level and plumb individual members of structure.

D. Do not use thermal cutting during erection unless approved by Engineer. Finish thermally cut sections within smoothness limits in AWS D1.1.

E. Do not enlarge unfair holes in members by burning or using drift pins. Ream holes that must be enlarged to admit bolts.

3.4 FIELD CONNECTIONS

A. Weld Connections: Comply with AWS D1.1 for welding procedure specifications, tolerances, appearance, and quality of welds and for methods used in correcting welding work.

1. Comply with AISC's "Code of Standard Practice for Steel Buildings and Bridges" and "Specification for Structural Steel Buildings--Allowable Stress Design and Plastic Design" for bearing, adequacy of temporary connections, alignment, and removal of paint on surfaces adjacent to field welds.
2. Assemble and weld built-up sections by methods that will maintain true alignment of axes without exceeding tolerances of AISC's "Code of Standard Practice for Steel Buildings and Bridges" for mill material.

3.5 FIELD QUALITY CONTROL

A. Testing and Inspecting: Owner shall engage a Special Inspector and a qualified independent testing and inspecting agency to perform field tests and inspections and prepare test reports per the requirements of the Statement of Special Inspections. Contractor's testing agency to perform all other testing.

B. Welded Connections: Field welds will be visually inspected according to AWS D1.1.

1. In addition to visual inspection, field welds will be tested according to AWS D1.1 and the following inspection procedures, at testing agency's option:

a. Liquid Penetrant Inspection: ASTM E 165.
b. Magnetic Particle Inspection: ASTM E 709; performed on root pass and on finished weld. Cracks or zones of incomplete fusion or penetration will not be accepted.
c. Ultrasonic Inspection: ASTM E 164.

C. Correct deficiencies in WORK that test reports and inspections indicate does not comply with the Contract Documents.

3.6 REPAIRS AND PROTECTION

A. Repair damaged galvanized coatings on galvanized items with galvanized repair paint according to ASTM A 780 and manufacturer's written instructions.

END OF SECTION

SECTION 05520
ALUMINUM ACCESS HATCH

PART 1- GENERAL

1.1 SUMMARY

A. Scope

1. This section includes providing and installing aluminum access hatches as shown on the Drawings and as specified herein.

1.2 SUBMITTALS

A. Provide submittals in accordance with Division 1.

B. Shop Drawings

1. The Contractor shall submit complete shop drawings of all equipment furnished for this project as covered by these specifications. The contractor's submittal must include a certification that the submitted material describes exactly the equipment to be provided or a list of deviations from the specifications with an explanation of each deviation.

C. Operation and Maintenance Manual

1. Provide operation and Maintenance Manuals in accordance with Specification 01730 "Operation and Maintenance Data."

2. Operation and maintenance manuals shall be provided by manufacturer at least two weeks prior to shipment of major equipment components. Each manual shall be a bound, indexed binder with drawings and parts lists prepared specifically for this project rather than general instructions that are not designed for this project.

1.3 1.3 QUALITY ASSURANCE

A. Qualifications

1. Manufacturer's Qualifications:

a. Manufacturers regularly engaged in the manufacture of the equipment as specified herein and who can demonstrate equipment of this specified design, in actual service for a period of not less than 10 years will be considered as acceptable manufacturers.

b. Manufacturers shall show evidence of quality assurance in manufacturing and supplying equipment essential in details to the equipment herein specified.

1.4 DELIVERY, STORAGE, AND HANDLING

A. Packing, Shipping, Handling, and Unloading

1. Deliver materials to the Site to ensure uninterrupted progress of the Work. Deliver anchor bolts and anchorage devices, which are to be embedded in cast-in-place concrete in ample time to prevent delay of that Work.

B. Acceptance at Site

1. All boxes, crates, and packages shall be inspected by Contractor upon delivery to the Site. Contractor shall notify Engineer, in writing, if any loss or damage exists to equipment or components. Replace loss and repair damage to new condition in accordance with manufacturer's instructions.

C. Storage and Protection

1. Store materials to permit easy access for inspection and identification. Keep all material off the ground, using pallets, platforms, or other supports. Protect steel members and packaged materials from corrosion and deterioration.

2. Store all equipment in covered storage off the ground and prevent condensation and in accordance with the manufacturer's recommendations for long-term storage

.

1.5 1.5 WARRANTY

A. Access covers shall carry a lifetime guarantee against defects in material and/or workmanship.

PART 2- PRODUCTS

2.1 ACCESS HATCH

A. Access doors shall be double spring assisted doors as indicated on the drawings

B. A protective grating panel shall be provided for each hatch and shall be 1 inch aluminum "I" bar grating with Safety Orange powder-coated finish. Grating shall be hinged with tamper proof stainless steel bolts, and shall be supplied with a positive latch to maintain unit in an upright position. Grating shall have a 6 inches viewing area on each lateral unhinged side for visual observation and limited maintenance. Grating support ledges on 300 lbs. psf loaded access covers shall incorporate nut rail with a minimum of four (4) stainless steel spring nuts. A padlock hasp for owner-supplied padlock shall be provided.

C. Access doors shall comply with the following specifications:

1. Cover Leaf(s) shall be a minimum 1/4" aluminum diamond plate.
2. Angle Frame shall be a minimum 1/4" aluminum with continuous anchor flange.
3. Frame shall be coated with a bituminous coating where in contact with concrete.

4. Load Rating shall be a minimum of 300 lbs. psf uniform live load with a maximum allowable deflection of 1/150 of the span.
5. Locking System: shall be a type 316 stainless steel slam lock with removable key.
6. Cover shall be equipped with the following stainless steel features:

    a. Spring assists, T-316 tamper proof attaching hardware, automatic T-316 hold open arm with aluminum latch.
    b. Cushion / Gasket: neoprene.

D. Rectangular access doors shall be Model S2S as manufactured by Halliday Products, or approved equal.

E. Circular access doors shall be Model R1R as manufactured by Halliday Products or approval equal.

2.2 PROTECTIVE (SAFETY) GRATING

A. The protective grating panel shall be 1 inch aluminum "I" bar grating with Safety Orange powder-coated finish. Grating shall be hinged with tamper proof stainless steel bolts, and shall be supplied with a positive latch to maintain unit in an upright position. Grating shall have a 6-in. viewing area on each lateral unhinged side for visual observation and limited maintenance. Grating support ledges on 300 lbs. psf loaded access covers shall incorporate nut rail with a minimum of four (4) stainless steel spring nuts. A padlock hasp for owner-supplied padlock shall be provided. Unit shall carry a Lifetime guarantee against defects in material and/or workmanship.

2.3 LADDER

A. Ladder shall be constructed entirely of aluminum. The rails shall be 1/2" x 2 3/4" (13mm x 70mm) aluminum extrusion and shall be spaced 16" apart. The wall mounted standoffs shall be 3/8" x 2 1/2" flat bar and welded to the rails at a maximum of 60" on center. The standoffs shall be a minimum of 7" and manufactured to fit flush with the wall. 1 3/8" diameter type "D" rungs with flat slip resistant surface shall be spaced at 12" on center and welded to the outside of each rail.

B. Ladder shall be Model L1B as manufactured by Halliday Products, or approved equal.

2.4 LADDER SAFETY EXTENSION

A. The Ladder Safety Extension shall be constructed entirely of aluminum and stainless steel. The aluminum housing shall mount to the ladder by means of stainless steel channel clamps secured to the ladder rungs with stainless steel "U" bolts. The aluminum telescoping post shall extend 37"- 34" above the top of the housing and lock into position with a stainless steel pin.

B. Ladder Safety Extension shall be Series L1E as manufactured by Halliday Products Inc., or approved equal.

PART 3- EXECUTION

3.1 Access hatches and appurtenances shall be installed in accordance with manufacturer's instructions.

END OF SECTION

SECTION 05530
PIPE SUPPORTS AND STANDS

PART 1- GENERAL

1.1 DESCRIPTION

A. The work covered by this Section comprises the furnishing of all labor, material, equipment to fabricate and install pipe supports, pipe stands, anchors, and appurtenances as shown on the plans.

1.2 QUALITY ASSURANCE

A. Responsibility for all errors in fabrication and correct fitting of structures shown on the shop drawings is the Contractor's.

1.3 REGULATORY REQUIREMENTS

A. Metal fabrication materials shall meet the requirements of the following ASTM Standards and Specifications.

B. Structural steel, plates and shapes A-36

C. Structural bolts, A-325

D. Other Bolts, A-307

E. Steel pipe, A 53.

F. Galvanizing, A123.

G. Comply with the provisions of the following standards except as otherwise shown or specified.

1. AWS code for welding in building construction.

1.4 SUBMITTALS

A. Submittals shall be in accordance with Division 1.

B. Submit shop drawings and manufacturer's descriptive literature as applicable for all metal fabrications. No items shall be fabricated prior to review and approval by Engineer. Minimum scale of drawings and elevations shall be 3/4 in. equals 1 ft., details enlarged to adequate size for clarity, show anchorage.

1.5 DELIVERY, STORAGE, AND HANDLING

A. Packing, Shipping, Handling, and Unloading

1. Deliver materials to the Site to ensure uninterrupted progress of the Work. Deliver anchor bolts and anchorage devices, which are to be embedded in cast-in-place concrete in ample time to prevent delay of that Work.

B. Acceptance at Site

1. All boxes, crates, and packages shall be inspected by Contractor upon delivery to the Site. Contractor shall notify Engineer, in writing, if any loss or damage exists to equipment or components. Replace loss and repair damage to new condition in accordance with manufacturer's instructions.

C. Storage and Protection

1. Store materials to permit easy access for inspection and identification. Keep all material off the ground, using pallets, platforms, or other supports. Protect steel members and packaged materials from corrosion and deterioration.

2. Store all equipment in covered storage off the ground and prevent condensation and in accordance with the manufacturer's recommendations for long-term storage.

PART 2- PRODUCTS

2.1 Anchor Bolts

A. All anchor bolts shall be stainless steel in accordance with Section 03240 "Adhesive Anchors.

2.2 Fabricated Pipe Supports

A. Pipe supports detailed on the drawings shall be shop fabricated.

B. All pipe supports shall be fabricated with minimum A36 steel or 304 stainless steel as indicated on the drawings.

C. All galvanized pipe supports shall be hot dipped galvanized after fabrication.

2.3 Manufacturer's Pipe Supports

A. Pipe supports that are specified by a manufacturer's name and figure number shall be purchased as a complete fabricated unit.

B. All purchased galvanized pipe supports shall be hot dipped galvanized after fabrication.

C. Accepted pipe support manufacturers shall be as follows or approved equal.

1. Grinnell

2. Standon adjustable pipe supports as manufactured by Material Resources, Inc. 22700 N.W. Quatama Street, Hillsboro, Oregon 97124.

2.4 Threaded Rods, Bolts and Nuts

A. All galvanized threaded rods, bolts, and nuts shall be hot dipped galvanized in accordance with ASTM 153 where required as part of a support. Nuts shall be over sized and hot dipped galvanized for thread compatibility.

B. All stainless steel threaded rods, nuts and bolts shall have an anti-seize compound applied to the threads before assembly.

2.5 Prefabricated Metal Framing Systems

A. Pipe supports where indicated or detailed on the drawings shall be fabricated by a prefabricated metal framing system as manufactured by Unistrut, B-Line or approved equal.

B. All framing system channel be a minimum 1-5/8 x 1-5/8 x 12 gauge unless indicated otherwise on the drawings.

C. All channel, nuts, bolts, clips, brackets and other appurtenances shall be a minimum of 304 stainless steel.

D. All channel framing shall have end caps.

2.6 Ductile Iron and Steel Pipe Size Considerations

A. Pipe supports shall be fabricated to match the OD of the pipe they are to be supporting. Curvature of supports and u-bolts shall conform to the OD of the pipe.

2.7 Inserts

A. All pipe supports shall be anchored to concrete floors, walls or overhead decks with stainless steel adhesive anchors in accordance with section 03240 "Adhesive Anchors"

2.8 Cable Tray Supports for Chemical Lines

A. All cable trays shall be aluminum with stainless steel support hardware.

B. Cable tray shall be B-Line Series 24 ladder type cable tray with 12" rung spacing. Each section shall have a minimum of two supports. Cable tray shall be supported with stainless steel framing strut and appurtenances.

PART 3- EXECUTION

3.1 Installation

A. All pipe supports and pipe stands shall be installed plumb, level, and square to the pipe and structures.

B. Hanger rods shall be secured at the structure and pipe supports with nuts to lock the rods in position to prevent movement. All rods shall be double nutted on each side of the

hanger and support.

C. Pipes shall be supported by steel pipe hangers, clamps, brackets, rods and inserts as required to support the imposed pipe loads. Hangers in general shall be new, manufactured of carbon steel and hot dipped galvanized after fabrication or 304 stainless steel as indicated on the drawings.

D. Pipe Support Spacing

1. All pipe supports shall be installed in locations as indicated on the drawings. The following spacing shall be used if supports are not indicated on the drawings. The more conservative shall apply. This is a maximum spacing and does not take into account valves, fittings, flow meters, risers, drops and other devices. Locations where these are located will require additional supports.

2. Ductile Iron and steel pipe supports shall be spaced in accordance with the following schedule for galvanized and stainless steel pipe:

Pipe sizes (inches)	½ - 3/4	1- 1 1/4	1 ½ - 2	3 – 4
Max spacing (feet)	4	6	8	10

3. Copper tubing pipe supports shall be spaced in accordance with the following schedule:

Nominal tubing size (inches)	1/2 - 3/4	1- 1 1/4	1 1/2 - 2
Max spacing (feet)	4	5	6

4. PVC pipe supports shall be spaced in accordance with the following schedule:

Nominal pipe size (inches)	1/2 - 3/4	1- 1 1/4	1 1/2 - 2	3-4
Max spacing (feet)	2.5	3	4	6

5. Maximum spacing between pipe supports shall be 10 feet for all pipes 6" and above. This is a maximum spacing and does not take into account valves, fittings, flow meters, risers, drops and other devices. Locations where these are located will require additional supports.

6. In addition to the above supports shall be located as per the following:

   a. Maximum spacing as indicated above
   b. Maximum of 12 inches from all horizontal and vertical changes in direction.
   c. On the suction and discharge of pump piping to eliminate pipe stresses on the pump flanges.
   d. On the connections to all equipment to eliminate pipe stresses on the equipment connections and allow equipment removal.

e. On the inlet and outlet piping to the water meter to allow the removal of the water meter.

f. At the location of valves, fittings or other devises that cause additions weight to the piping.

g. Additional pipe supports as indicated on the drawings.

3.2 INSTALLATION

A. Coatings

1. Repair all damaged galvanized coatings on galvanized items with galvanized repair paint according to ASTM A 780 and manufacturer's written instructions.

2. Where it is necessary to assemble supports in the field with galvanized threaded pipe, all pipe threads shall be coated as described above.

3. All threads where used for adjustment of the supports shall be coated with an anti-seize compound.

END OF SECTION

SECTION 06100
ROUGH CARPENTRY

PART 1 - GENERAL

1.1 SUMMARY

A. Section Includes:

1. Framing with dimension lumber.
2. Wood blocking, and nailers.
3. Wood furring and grounds.
4. Wood sleepers.
5. Plywood backing panels.

1.2 DEFINITIONS

A. Exposed Framing: Framing not concealed by other construction.

B. Dimension Lumber: Lumber of 2 inches nominal or greater but less than 5 inches nominal in least dimension.

C. Lumber grading agencies, and the abbreviations used to reference them, include the following:

1. NeLMA: Northeastern Lumber Manufacturers' Association.
2. NLGA: National Lumber Grades Authority.
3. SPIB: The Southern Pine Inspection Bureau.

1.3 ACTION SUBMITTALS

A. Product Data: For each type of process and factory-fabricated product. Indicate component materials and dimensions and include construction and application details.

1. Include data for wood-preservative treatment from chemical treatment manufacturer and certification by treating plant that treated materials comply with requirements. Indicate type of preservative used and net amount of preservative retained.
2. For products receiving a waterborne treatment, include statement that moisture content of treated materials was reduced to levels specified before shipment to Project site.
3. Include copies of warranties from chemical treatment manufacturers for each type of treatment.

B. Fastener Patterns: Full-size templates for fasteners in exposed framing.

1.4 INFORMATIONAL SUBMITTALS

A. Material Certificates: For dimension lumber specified to comply with minimum allowable unit stresses. Indicate species and grade selected for each use and design values approved by the ALSC Board of Review.

B. Evaluation Reports: For the following, from ICC-ES:

1. Wood-preservative-treated wood.
2. Power-driven fasteners.
3. Powder-actuated fasteners.
4. Metal framing anchors.

1.5 QUALITY ASSURANCE

A. Testing Agency Qualifications: For testing agency providing classification marking for fire-retardant treated material, an inspection agency acceptable to authorities having jurisdiction that periodically performs inspections to verify that the material bearing the classification marking is representative of the material tested.

1.6 DELIVERY, STORAGE, AND HANDLING

A. Stack lumber flat with spacers beneath and between each bundle to provide air circulation. Protect lumber from weather by covering with waterproof sheeting, securely anchored. Provide for air circulation around stacks and under coverings.

PART 2 - PRODUCTS

2.1 WOOD PRODUCTS, GENERAL

A. Lumber: DOC PS 20 and applicable rules of grading agencies indicated. If no grading agency is indicated, provide lumber that complies with the applicable rules of any rules-writing agency certified by the ALSC Board of Review. Provide lumber graded by an agency certified by the ALSC Board of Review to inspect and grade lumber under the rules indicated.

1. Factory mark each piece of lumber with grade stamp of grading agency.
2. For exposed lumber indicated to receive a stained or natural finish, mark grade stamp on end or back of each piece or omit grade stamp and provide certificates of grade compliance issued by grading agency.
3. Where nominal sizes are indicated, provide actual sizes required by DOC PS 20 for moisture content specified. Where actual sizes are indicated, they are minimum dressed sizes for dry lumber.
4. Provide dressed lumber, S4S, unless otherwise indicated.

B. Maximum Moisture Content of Lumber: 19 percent unless otherwise indicated.

2.2 WOOD-PRESERVATIVE-TREATED LUMBER

A. Preservative Treatment by Pressure Process: AWPA U1; Use Category UC2 for interior construction not in contact with the ground, Use Category UC3b for exterior construction not in contact with the ground, and Use Category UC4a for items in contact with the ground.

1. Preservative Chemicals: Acceptable to authorities having jurisdiction and containing no arsenic or chromium.
2. For exposed items indicated to receive a stained or natural finish, use chemical formulations that do not require incising, contain colorants, bleed through, or otherwise adversely affect finishes.

B. Kiln-dry lumber after treatment to a maximum moisture content of 19 percent. Do not use material that is warped or that does not comply with requirements for untreated material.

C. Mark lumber with treatment quality mark of an inspection agency approved by the ALSC Board of Review.

1. For exposed lumber indicated to receive a stained or natural finish, mark end or back of each piece or omit marking and provide certificates of treatment compliance issued by inspection agency.

D. Application: Treat items indicated on Drawings, and the following:

1. Wood cants, nailers, curbs, equipment support bases, blocking, stripping, and similar members in connection with roofing, flashing, vapor barriers, and waterproofing.
2. Wood sills, sleepers, blocking, and similar concealed members in contact with masonry or concrete.
3. Wood framing and furring attached directly to the interior of below-grade exterior masonry or concrete walls.
4. Wood framing members that are less than 18 inches above the ground in crawlspaces or unexcavated areas.
5. Wood floor plates that are installed over concrete slabs-on-grade.

2.3 DIMENSION LUMBER FRAMING

A. Rafters and Other Framing: No. 2 grade.

1. Species: Mixed southern pine: SPIB.

B. Exposed Framing: Provide material hand-selected for uniformity of appearance and freedom from characteristics, on exposed surfaces and edges, that would impair finish appearance, including decay, honeycomb, knot-holes, shake, splits, torn grain, and wane.

1. Application: Exposed exterior framing indicated to receive a stained or natural finish.
2. Species and Grade: Southern pine; No. 2 grade; SPIB.

2.4 TIMBER FRAMING

A. Provide timber framing complying with the following requirements, according to grading rules of grading agency indicated:

1. Species and Grade: Southern pine; No. 2 grade; SPIB.
2. Maximum Moisture Content: 20 percent.
3. Additional Restriction: Free of heart centers.

2.5 MISCELLANEOUS LUMBER

A. General: Provide miscellaneous lumber indicated and lumber for support or attachment of other construction, including the following:

1. Blocking.
2. Nailers.

3. Cants.
4. Furring.
5. Grounds.
6. Utility shelving.

B. For items of dimension lumber size, provide Standard, Stud, or No. 3 grade lumber and the following species:

1. Mixed southern pine; SPIB.

C. For utility shelving, provide lumber with 19 percent maximum moisture content and the following species and grades:

1. Mixed southern pine; No. 2 grade; SPIB.

D. For concealed boards, provide lumber with 19 percent maximum moisture content and the following species and grades:

1. Mixed southern pine; No. 2 grade; SPIB.

E. For blocking not used for attachment of other construction, Utility, Stud, or No. 3 grade lumber of any species may be used provided that it is cut and selected to eliminate defects that will interfere with its attachment and purpose.

F. For blocking and nailers used for attachment of other construction, select and cut lumber to eliminate knots and other defects that will interfere with attachment of other work.

G. For furring strips for installing plywood or hardboard paneling, select boards with no knots capable of producing bent-over nails and damage to paneling.

2.6 PLYWOOD BACKING PANELS

A. Equipment Backing Panels: DOC PS 1, Exterior, AC, in thickness indicated or, if not indicated, not less than 3/4-inch nominal thickness.

2.7 FASTENERS

A. General: Provide fasteners of size and type indicated that comply with requirements specified in this article for material and manufacture.

1. Where rough carpentry is exposed to weather, in ground contact, pressure-preservative treated, or in area of high relative humidity, provide fasteners with hot-dip zinc coating complying with ASTM A 153.

B. Nails, Brads, and Staples: ASTM F 1667.

C. Power-Driven Fasteners: NES NER-272.

D. Wood Screws: ASME B18.6.1.

E. Lag Bolts: ASME B18.2.1.

F. Bolts: Steel bolts complying with ASTM A 307, Grade A; with ASTM A 563 hex nuts and, where indicated, flat washers.

2.8 METAL FRAMING ANCHORS

A. Manufacturers: Subject to compliance with requirements, available manufacturers offering products that may be incorporated into the Work include, but are not limited to, the following:

1. Cleveland Steel Specialty Co.
2. KC Metals Products, Inc.
3. Phoenix Metal Products, Inc.
4. Simpson Strong-Tie Co., Inc.
5. USP Structural Connectors.

B. Allowable Design Loads: Provide products with allowable design loads, as published by manufacturer, that meet or exceed those indicated. Manufacturer's published values shall be determined from empirical data or by rational engineering analysis and demonstrated by comprehensive testing performed by a qualified independent testing agency.

C. Galvanized-Steel Sheet: Hot-dip, zinc-coated steel sheet complying with ASTM A 653, G60 coating designation.

1. Use for interior locations unless otherwise indicated.

D. Hot-Dip, Heavy-Galvanized Steel Sheet: ASTM A 653; structural steel (SS), high-strength low-alloy steel Type A (HSLAS Type A), or high-strength low-alloy steel Type B (HSLAS Type B); G185 coating designation; and not less than 0.036 inch thick.

1. Use for wood-preservative-treated lumber and where indicated.

2.9 MISCELLANEOUS MATERIALS

A. Sill-Sealer Gaskets: Closed-cell neoprene foam, 1/4 inch thick, selected from manufacturer's standard widths to suit width of sill members indicated.

B. Adhesives for Gluing Furring and Sleepers to Concrete or Masonry: Formulation complying with ASTM D 3498 that is approved for use indicated by adhesive manufacturer.

C. Water-Repellent Preservative: NWWDA-tested and -accepted formulation containing 3-iodo-2-propynyl butyl carbamate, combined with an insecticide containing chloropyrifos as its active ingredient.

PART 3 - EXECUTION

3.1 INSTALLATION, GENERAL

A. Set rough carpentry to required levels and lines, with members plumb, true to line, cut, and fitted. Fit rough carpentry to other construction; scribe and cope as needed for accurate fit. Locate furring, nailers, blocking, grounds, and similar supports to comply with requirements for attaching other construction.

B. Framing Standard: Comply with AF&PA's WCD 1, "Details for Conventional Wood Frame Construction," unless otherwise indicated.

C. Framing with Engineered Wood Products: Install engineered wood products to comply with manufacturer's written instructions.

D. Install plywood backing panels by fastening to studs; coordinate locations with utilities requiring backing panels.

E. Metal Framing Anchors: Install metal framing anchors to comply with manufacturer's written instructions. Install fasteners through each fastener hole.

F. Install sill sealer gasket to form continuous seal between sill plates and foundation walls.

G. Do not splice structural members between supports unless otherwise indicated.

H. Provide blocking and framing as indicated and as required to support facing materials, fixtures, specialty items, and trim.

I. Sort and select lumber so that natural characteristics will not interfere with installation or with fastening other materials to lumber. Do not use materials with defects that interfere with function of member or pieces that are too small to use with minimum number of joints or optimum joint arrangement.

J. Comply with AWPA M4 for applying field treatment to cut surfaces of preservative-treated lumber.

1. Use inorganic boron for items that are continuously protected from liquid water.
2. Use copper naphthenate for items not continuously protected from liquid water.

K. Securely attach rough carpentry work to substrate by anchoring and fastening as indicated, complying with the following:

1. NES NER-272 for power-driven fasteners.
2. Table 2304.9.1, "Fastening Schedule," in ICC's International Building Code.

L. Use steel common nails unless otherwise indicated. Select fasteners of size that will not fully penetrate members where opposite side will be exposed to view or will receive finish materials. Make tight connections between members. Install fasteners without splitting wood. Drive nails snug but do not countersink nail heads unless otherwise indicated.

M. For exposed work, arrange fasteners in straight rows parallel with edges of members, with fasteners evenly spaced, and with adjacent rows staggered.

1. Comply with approved or indicated fastener patterns where applicable. Before fastening, mark fastener locations, using a template made of sheet metal, plastic, or cardboard.
2. Use finishing nails unless otherwise indicated. Countersink nail heads and fill holes with wood filler.

3.2 WOOD SLEEPER, BLOCKING, AND NAILER INSTALLATION

A. Install where indicated and where required for attaching other work. Form to shapes indicated and cut as required for true line and level of attached work. Coordinate locations with other work involved.

B. Attach items to substrates to support applied loading. Recess bolts and nuts flush with surfaces unless otherwise indicated.

3.3 PROTECTION

A. Protect rough carpentry from weather. If, despite protection, rough carpentry becomes wet apply EPA-registered borate treatment. Apply borate solution by spraying to comply with EPA-registered label.

END OF SECTION

SECTION 06160
SHEATHING

PART 1 - GENERAL

1.1 SUMMARY

A. Section Includes:

1. Wall sheathing.
2. Roof sheathing.

1.2 ACTION SUBMITTALS

A. Product Data: For each type of process and factory-fabricated product. Indicate component materials and dimensions and include construction and application details.

1. For products receiving a waterborne treatment, include statement that moisture content of treated materials was reduced to levels specified before shipment to Project site.
2. Include copies of warranties from chemical treatment manufacturers for each type of treatment.

1.3 QUALITY ASSURANCE

A. Testing Agency Qualifications: For testing agency providing classification marking for fire-retardant-treated material, an inspection agency acceptable to authorities having jurisdiction that periodically performs inspections to verify that the material bearing the classification marking is representative of the material tested.

1.4 DELIVERY, STORAGE, AND HANDLING

A. Stack panels flat with spacers beneath and between each bundle to provide air circulation. Protect sheathing from weather by covering with waterproof sheeting, securely anchored. Provide for air circulation around stacks and under coverings.

PART 2 - PRODUCTS

2.1 WOOD PANEL PRODUCTS

A. Plywood: Either DOC PS 1 or DOC PS 2 unless otherwise indicated.

B. Oriented Strand Board: DOC PS 2.

C. Thickness: As needed to comply with requirements specified, but not less than thickness indicated.

D. Factory mark panels to indicate compliance with applicable standard.

2.2 WALL SHEATHING

A. Plywood Wall Sheathing: Exposure 1, Structural I sheathing.

1. Span Rating: Not less than 32/16.
2. Nominal Thickness: Not less than 5/8 inch.

B. Oriented-Strand-Board Wall Sheathing: Exposure 1, Structural I sheathing.

1. Span Rating: Not less than 32/16.
2. Nominal Thickness: Not less than 5/8 inch.

2.3 ROOF SHEATHING

A. Plywood Roof Sheathing: Exposure 1, Structural I sheathing.

1. Span Rating: Not less than 32/16.
2. Nominal Thickness: Not less than 5/8 inch.

B. Oriented-Strand-Board Roof Sheathing: Exposure 1, Structural I sheathing.

1. Span Rating: Not less than 32/16.
2. Nominal Thickness: Not less than 5/8 inch.

2.4 FASTENERS

A. General: Provide fasteners of size and type indicated that comply with requirements specified in this article for material and manufacture.

1. For roof and wall sheathing, provide fasteners with hot-dip zinc coating complying with ASTM A 153.

B. Nails, Brads, and Staples: ASTM F 1667.

C. Power-Driven Fasteners: NES NER-272.

D. Wood Screws: ASME B18.6.1.

PART 3 - EXECUTION

3.1 INSTALLATION, GENERAL

A. Do not use materials with defects that impair quality of sheathing or pieces that are too small to use with minimum number of joints or optimum joint arrangement. Arrange joints so that pieces do not span between fewer than three support members.

B. Cut panels at penetrations, edges, and other obstructions of work; fit tightly against abutting construction unless otherwise indicated.

C. Securely attach to substrate by fastening as indicated, complying with the following:

1. NES NER-272 for power-driven fasteners.
2. Table 2304.9.1, "Fastening Schedule," in ICC's "International Building Code."

D. Use common wire nails unless otherwise indicated. Select fasteners of size that will not fully penetrate members where opposite side will be exposed to view or will receive finish materials. Make tight connections. Install fasteners without splitting wood.

E. Coordinate wall and roof sheathing installation with flashing and joint-sealant installation so these materials are installed in sequence and manner that prevent exterior moisture from passing through completed assembly.

F. Coordinate sheathing installation with installation of materials installed over sheathing so sheathing is not exposed to precipitation or left exposed at end of the workday when rain is forecast.

3.2 WOOD STRUCTURAL PANEL INSTALLATION

A. General: Comply with applicable recommendations in APA Form No. E30, "Engineered Wood Construction Guide," for types of structural-use panels and applications indicated.

B. Fastening Methods: Fasten panels as indicated below:

1. Wall and Roof Sheathing:

a. Nail to wood framing. Apply a continuous bead of glue to framing members at edges of wall sheathing panels.
b. Space panels 1/8 inch apart at edges and ends.

END OF SECTION

SECTION 06170
SHOP-FABRICATED WOOD TRUSSES

PART 1 - GENERAL

1.1 RELATED DOCUMENTS

A. Drawings and general provisions of the Contract, including General and Supplementary Conditions and Division 1 Specification Sections, apply to this Section.

1.2 SUMMARY

A. This Section includes wood roof trusses and truss accessories.

1.3 DEFINITIONS

A. Shop-Fabricated Wood Trusses: Planar structural units consisting of metal-plate-connected members fabricated from dimension lumber and cut and assembled before delivery to Project site.

B. Lumber grading agencies, and the abbreviations used to reference them, include the following:

1. NELMA - Northeastern Lumber Manufacturers Association.
2. NLGA - National Lumber Grades Authority.
3. SPIB - Southern Pine Inspection Bureau.

1.4 PERFORMANCE REQUIREMENTS

A. Structural Performance: Provide metal-plate-connected wood trusses capable of withstanding design loads within limits and under conditions indicated.

1. Design Loads: As indicated.
2. Maximum Deflection Under Design Loads: Vertical deflection of 1/240 of span.

1.5 SUBMITTALS

A. Shop Drawings: Show location, pitch, span, camber, configuration, and spacing for each type of truss required; species, sizes, and stress grades of lumber; splice details; type, size, material, finish, design values, orientation, and location of metal connector plates; and bearing details. Include an erection framing plan.

1. For installed products indicated to comply with design loads, include structural analysis data signed and sealed by the qualified professional engineer responsible for their preparation.
2. Include truss shop drawings signed and sealed by the qualified professional engineer responsible for their preparation.
3. Indicate locations, sizes, and materials for permanent bracing required to prevent buckling of individual truss members due to design loads

1.6 QUALITY ASSURANCE

A. Metal Connector-Plate Manufacturer Qualifications: A manufacturer that is a member of TPI and that complies with TPI quality-control procedures for manufacture of connector plates published in TPI 1.

1. Manufacturer's responsibilities include providing professional engineering services needed to assume engineering responsibility.
2. Engineering Responsibility: Preparation of Shop Drawings and comprehensive engineering analysis by a qualified professional engineer.

B. Fabricator Qualifications: Shop that participates in a recognized quality-assurance program that complies with quality-control procedures in TPI 1 and that involves third-party inspection by an independent testing and inspecting agency acceptable to Architect and authorities having jurisdiction.

1.7 DELIVERY, STORAGE, AND HANDLING

A. Handle and store trusses to comply with recommendations in TPI BCSI, "Building Component Safety Information: Guide to Good Practice for Handling, Installing, Restraining, & Bracing Metal Plate Connected Wood Trusses."

1. Store trusses flat, off of ground, and adequately supported to prevent lateral bending.
2. Protect trusses from weather by covering with waterproof sheeting, securely anchored.
3. Provide for air circulation around stacks and under coverings.

B. Inspect trusses showing discoloration, corrosion, or other evidence of deterioration. Discard and replace trusses that are damaged or defective.

1.8 COORDINATION

A. Time delivery and erection of trusses to avoid extended on-site storage and to avoid delaying progress of other trades whose work must follow erection of trusses.

PART 2 - PRODUCTS

2.1 PERFORMANCE REQUIREMENTS

A. Delegated Design: Engage a qualified professional engineer to design metal-plate-connected wood trusses.

B. Structural Performance: Provide metal-plate-connected wood trusses capable of withstanding design loads within limits and under conditions indicated. Comply with requirements in TPI 1 unless more stringent requirements are specified below.

1. Design Loads: As indicated on drawings.
2. Maximum Deflection Under Design Loads:

a. Roof Trusses: Vertical deflection of 1/240 of span.

C. Comply with applicable requirements and recommendations of the following publications:

1. TPI 1, "National Design Standard for Metal Plate Connected Wood Truss Construction."
2. TPI DSB, "Recommended Design Specification for Temporary Bracing of Metal Plate Connected Wood Trusses."
3. TPI BCSI, "Building Component Safety Information: Guide to Good Practice for Handling, Installing, Restraining, & Bracing Metal Plate Connected Wood Trusses."

D. Wood Structural Design Standard: Comply with applicable requirements in AF&PA's "National Design Specifications for Wood Construction" and its "Supplement."

2.2 DIMENSION LUMBER

A. Lumber: DOC PS 20 and applicable rules of grading agencies indicated. If no grading agency is indicated, provide lumber that complies with the applicable rules of any rules writing agency certified by the ALSC Board of Review. Provide lumber graded by an agency certified by the ALSC Board of Review to inspect and grade lumber under the rules indicated.

1. Factory mark each piece of lumber with grade stamp of grading agency.
2. Provide dressed lumber, S4S.
3. Provide dry lumber with 19 percent maximum moisture content at time of dressing.

B. Permanent Bracing: Provide wood bracing that complies with requirements for miscellaneous lumber in Section 061000 "Rough Carpentry."

2.3 METAL CONNECTOR PLATES

A. Manufacturers: Subject to compliance with requirements, provide products by one of the following:

1. Alpine Engineered Products, Inc.; an ITW company.
2. Cherokee Metal Products, Inc.; Masengill Machinery Company.
3. CompuTrus, Inc.
4. Eagle Metal Products.
5. Jager Building Systems, Inc.; a Tembec/SGF Rexfor company.
6. MiTek Industries, Inc.; a subsidiary of Berkshire Hathaway Inc.
7. Robbins Engineering, Inc.
8. Truswal Systems Corporation; an ITW company.

B. Source Limitations: Obtain metal connector plates from single manufacturer.

C. General: Fabricate connector plates to comply with TPI 1.

D. Hot-Dip Heavy-Galvanized-Steel Sheet: ASTM A 653; Structural Steel (SS), high-strength low-alloy steel Type A (HSLAS Type A), or high-strength low-alloy steel Type B (HSLAS Type B); G185 coating designation; and not less than 0.036 inch thick.

1. Use for wood-preservative-treated lumber and where indicated.

2.4 FASTENERS

A. General: Provide fasteners of size and type indicated that comply with requirements specified in this article for material and manufacture.

1. Provide fasteners for use with metal framing anchors that comply with written recommendations of metal framing manufacturer.
2. Where trusses are exposed to weather, in ground contact, made from pressure-preservative treated wood, or in area of high relative humidity, provide fasteners with hot-dip zinc coating complying with ASTM A 153.

B. Nails, Brads, and Staples: ASTM F 1667.

2.5 METAL FRAMING ANCHORS AND ACCESSORIES

A. Manufacturers: Subject to compliance with requirements, provide products by one of the following:

1. Cleveland Steel Specialty Co.
2. KC Metals Products, Inc.
3. Phoenix Metal Products, Inc.
4. Simpson Strong-Tie Co., Inc.
5. USP Structural Connectors.

B. Allowable Design Loads: Provide products with allowable design loads, as published by manufacturer, that meet or exceed those indicated. Manufacturer's published values shall be determined from empirical data or by rational engineering analysis and demonstrated by comprehensive testing performed by a qualified independent testing agency.

C. Hot-Dip Heavy-Galvanized-Steel Sheet: ASTM A 653; Structural Steel (SS), high-strength low-alloy steel Type A (HSLAS Type A), or high-strength low-alloy steel Type B (HSLAS Type B); G185 coating designation; and not less than 0.036 inch thick.

1. Use for wood-preservative-treated lumber and where indicated.

D. Truss Tie-Downs: Bent strap tie for fastening roof trusses to wood bearing plates, minimum 1-1/2 inches wide by minimum 0.050 inch thick.

2.6 MISCELLANEOUS MATERIALS

A. Galvanizing Repair Paint: SSPC-Paint 20, with dry film containing a minimum of 94 percent zinc dust by weight.

2.7 FABRICATION

A. Cut truss members to accurate lengths, angles, and sizes to produce close-fitting joints.

B. Fabricate metal connector plates to sizes, configurations, thicknesses, and anchorage details required to withstand design loads for types of joint designs indicated.

C. Assemble truss members in design configuration indicated; use jigs or other means to ensure uniformity and accuracy of assembly with joints closely fitted to comply with tolerances in TPI 1. Position members to produce design camber indicated.

1. Fabricate wood trusses within manufacturing tolerances in TPI 1.

D. Connect truss members by metal connector plates located and securely embedded simultaneously in both sides of wood members by air or hydraulic press.

PART 3 - EXECUTION

3.1 INSTALLATION

A. Install wood trusses only after supporting construction is in place and is braced and secured.

B. Before installing, splice trusses delivered to Project site in more than one piece.

C. Hoist trusses in place by lifting equipment suited to sizes and types of trusses required, exercising care not to damage truss members or joints by out-of-plane bending or other causes.

D. Install and brace trusses according to TPI recommendations and as indicated.

E. Install trusses plumb, square, and true to line and securely fasten to supporting construction.

F. Unless noted otherwise, space trusses 24 inches on center maximum; adjust and align trusses in location before permanently fastening.

G. Anchor trusses securely at bearing points; use metal framing anchors. Install fasteners through each fastener hole in metal framing anchor according to manufacturer's fastening schedules and written instructions.

H. Install and fasten permanent bracing during truss erection and before construction loads are applied. Anchor ends of permanent bracing where terminating at walls or beams.

I. Install wood trusses within installation tolerances in TPI 1.

J. Do not alter trusses in field. Do not cut, drill, notch, or remove truss members.

K. Replace wood trusses that are damaged or do not meet requirements.

1. Damaged trusses may be repaired according to truss repair details signed and sealed by the qualified professional engineer responsible for truss design, when approved by Architect.

3.2 REPAIRS AND PROTECTION

A. Repair damaged galvanized coatings on exposed surfaces with galvanized repair paint according to ASTM A 780 and manufacturer's written instructions.

END OF SECTION

SECTION 07212
BOARD AND BATT INSULATION

PART 1 GENERAL

1.1 RELATED REQUIREMENTS

A. Division 03 - Cast-in-Place Concrete: Field-applied termiticide for concrete slabs and foundations.

1.2 REFERENCE STANDARDS

A. ASTM C578 - Standard Specification for Rigid, Cellular Polystyrene Thermal Insulation; 2014.

B. ASTM E84 - Standard Test Method for Surface Burning Characteristics of Building Materials; 2014.

1.3 SUBMITTALS

A. See Section 01300 - Administrative Requirements, for submittal procedures.

B. Product Data: Provide data on product characteristics, performance criteria, and product limitations.

C. Manufacturer's Installation Instructions: Include information on special environmental conditions required for installation and installation techniques.

1.4 FIELD CONDITIONS

A. Do not install insulation adhesives when temperature or weather conditions are detrimental to successful installation.

PART 2 PRODUCTS

2.1 APPLICATIONS

A. Insulation at Perimeter of Foundation: Extruded polystyrene board.

B. Insulation Inside Masonry Cavity Walls: Extruded polystyrene board.

2.2 FOAM BOARD INSULATION MATERIALS

A. Extruded Polystyrene Board Insulation: Extruded polystyrene board; ASTM C578; with either natural skin or cut cell surfaces, and the following characteristics:
   1. Flame Spread Index: 25 or less, when tested in accordance with ASTM E84.
   2. Smoke Developed Index: 450 or less, when tested in accordance with ASTM E84.
   3. R-value; 1 inch of material at 72 degrees F: 5, minimum.
   4. Board Edges: Square.
   5. Water Absorption, Maximum: 0.3 percent, by volume.
   6. Manufacturers:
      a. Dow Chemical Co: www.dow.com.
      b. Owens Corning Corporation; FOAMULAR Extruded Polystyrene (XPS) Insulation: www.ocbuildingspec.com.
      c. Kingspan Insulation LLC; GreenGuard XPS TYPE IV 25 PSI: www.trustgreenguard.com.

2.3 ACCESSORIES

A. Tape joints of rigid insulation in accordance with roofing and insulation manufacturers' instructions.

B. Insulation Fasteners: Impaling clip of unfinished steel with washer retainer and clips, to be adhered to surface to receive insulation, length to suit insulation thickness and substrate, capable of securely and rigidly fastening insulation in place.

C. Adhesive: Type recommended by insulation manufacturer for application.

PART 3 EXECUTION

3.1 EXAMINATION

A. Verify that substrate, adjacent materials, and insulation materials are dry and that substrates are ready to receive insulation.

B. Verify substrate surfaces are flat, free of honeycomb, fins, irregularities, or materials or substances that may impede adhesive bond.

3.2 BOARD INSTALLATION AT FOUNDATION PERIMETER

A. Adhere a 6 inch wide strip of polyethylene sheet over construction, control, and expansion joints with double beads of adhesive each side of joint.
   1. Tape seal joints.

B. Install boards horizontally on foundation perimeter.
   1. Place boards to maximize adhesive contact.
   2. Install in running bond pattern.
   3. Butt edges and ends tightly to adjacent boards and to protrusions.

C. Extend boards over expansion joints, unbonded to foundation on one side of joint.

D. Cut and fit insulation tightly to protrusions or interruptions to the insulation plane.

3.3 BOARD INSTALLATION AT CAVITY WALLS

A. Secure impale fasteners to substrate at a frequency as follows:
   1. 6 per insulation board.

B. Install boards to fit snugly between wall ties.

C. Install boards horizontally on walls.
   1. Butt edges and ends tightly to adjacent boards and to protrusions.
   2. Place impale fastener locking discs.

D. Cut and fit insulation tightly to protrusions or interruptions to the insulation plane.

3.4 PROTECTION

A. Do not permit installed insulation to be damaged prior to its concealment.

END OF SECTION

SECTION 07220
EIFS EXTERIOR WALL SYSTEM

PART 1 - GENERAL

1.1 DESCRIPTION

A. Scope:

1. Furnish all labor, materials, equipment and appurtenances required to provide an EIFS exterior wall system as described herein on the Water Booster Station Building.

2. EIFS exterior wall shall match the buildings at the Fluvanna Women's Correctional Institution located adjacent to the property.

3. Contractor shall provide Manufacturer's representative to inspect the existing buildings as part of this Contract and provide the required materials and system to duplicate the existing buildings visible exterior finish in accordance with the specifications herein.

1.2 REFERENCES

A. ASTM B 117 (Federal Test Standard 141A Method 6061) Standard Practice for Operating Salt Spray (Fog) Apparatus
B. ASTM C 150 Standard Specification for Portland Cement
C. ASTM C 297 Standard Test Method for Flatwise Tensile Strength of Sandwich Constructions
D. ASTM C 1063 Standard Specification for Installation of Lathing and Furring to Receive Interior and Exterior Portland Cement-Based Plaster
E. ASTM C 1177 Standard Specification for Glass Mat Gypsum Substrate for Use as Sheathing
F. ASTM C 1396 (formerly C 79) Standard Specification for Gypsum Board
G. ASTM D 968 (Federal Test Standard 141A Method 6191) Standard Test Methods for Abrasion Resistance of Organic Coatings by Falling Abrasive
H. ASTM D 1784 Standard Specification for Rigid Poly (Vinyl Chloride) (PVC) Compounds and Chlorinated Poly (Vinyl Chloride) (CPVC) Compounds
I. ASTM D 1970 Standard Specification for Self-Adhering Polymer Modified Bituminous Sheet Materials Used as Steep Roofing Underlayment for Ice Dam Protection
J. ASTM D 2247 (Federal Test Standard 141A Method 6201) Standard Practice for Testing Water Resistance of Coatings in 100% Relative Humidity
K. ASTM D 2898 Standard Test Method for Accelerated Weathering of Fire-Retardant-Treated Wood for Fire Testing
L. ASTM D 3273 Standard Test Method for Resistance to Growth of Mold on the Surface of Interior Coatings in an Environmental Chamber

M. ASTM D 4060 Standard Test Method for Abrasion Resistance of Organic Coatings by the Taber Abraser
N. ASTM E 84 Standard Test Method for Surface Burning Characteristics of Building Materials
O. ASTM E 96 Standard Test Methods for Water Vapor Transmission of Materials
P. ASTM E 119 Standard Method for Fire Tests of Building Construction and Materials
Q. ASTM E 283 Standard Test Method for Determining Rate of Air Leakage Through Exterior Windows, Curtain Walls and Doors Under Specified Pressure Differences Across the Specimen
R. ASTM E 330 Test Method for Structural Performance of Exterior Windows, Doors and Curtain Walls by Uniform Static Air Pressure Difference
S. ASTM E 331 Test Method for Water Penetration of Exterior Windows, Skylights, Doors and Curtain Walls by Uniform Static Air Pressure Difference
T. ASTM E 2098 Test Method for Determining the Tensile Breaking Strength of Glass Fiber Reinforcing Mesh for use in Class PB Exterior Insulation and Finish Systems (EIFS), after Exposure to Sodium Hydroxide Solution
U. ASTM E 2134 Test Method for Evaluating the Tensile-Adhesion Performance of Exterior Insulation and Finish Systems (EIFS)
V. ASTM E 2178 Standard Test Method for Air Permeance of Building Materials
W. ASTM E 2273 Test Method for Determining the Drainage Efficiency of Exterior Insulation and Finish Systems (EIFS) Clad Wall Assemblies
X. ASTM E 2357 Standard Test Method for Determining Air Leakage of Air Barrier Assemblies
Y. ASTM E 2430 Standard Specification for Expanded Polystyrene (EPS) Thermal Insulation Boards for use in Exterior Insulation and Finish Systems (EIFS)
Z. ASTM E 2485 (formerly EIMA Std. 101.01) Standard Test Method for Freeze-Thaw Resistance of Exterior Insulation and Finish Systems (EIFS) and Water-Resistive Barrier Coatings
AA. ASTM E 2486 (formerly EIMA Std. 101.86) Standard Test Method for Impact Resistance of Class PB and PI Exterior Insulation and Finish Systems (EIFS)
BB. ASTM E 2568 Standard Specification for PB Exterior Insulation and Finish Systems
CC. 29. ASTM E 2570 Standard Test Method for Evaluating Water-Resistive Barrier (WRB) Coatings Used Under Exterior Insulation and Finish Systems (EIFS) or EIFS with Drainage
DD. ASTM G 155 (Federal Test Standard 141A Method 6151) Standard Practice for Operating-Xenon Arc Light Apparatus for Exposure of Nonmetallic Materials
EE. DS131, Dryvit Expanded Polystyrene Insulation Board Specification
FF. DS151, Custom Brick™ Polymer System Specifications for Use On Vertical Walls
GG. DS152, Dryvit Cleaning and Recoating
HH. DS153, Dryvit Expansion Joints and Sealants
II. DS159, Dryvit Water Vapor Transmission
JJ. DS455, Backstop® NT™
KK. DS456, Rapidry DM™ 35-50 or DS457, Rapidry DM™ 50-75 Data Sheets
LL. DS494, Dryvit AquaFlash® System
MM. DS704, Backstop® DMS

NN. DS705, Reflectit™
OO. Mil Std E5272 Environmental Testing
PP. Mil Std 810B Environmental Test Methods
QQ. NFPA 268 Standard Test Method for Determining Ignitibility of Exterior Wall Assemblies Using a Radiant Heat Energy Source.
RR. NFPA 285 Standard Method of Test for the Evaluation of Flammability Characteristics of Exterior Non-Load-Bearing Wall Assemblies Containing Combustible Components Using the Intermediate-Scale, Multistory Test Apparatus
SS. ANSI FM 4880 Evaluating Insulated Wall or Wall and Roof/Ceiling Assemblies; Plastic Interior Finish Materials; Plastic Exterior Building Panels; Wall/Ceiling Coating Systems; Interior or Exterior Finish Systems

1.3 DEFINITIONS

A. Base Coat: Material used to encapsulate one or more layers of reinforcing mesh fully embedded that is applied to the outside surface of the EPS.
B. Building Expansion Joint: A joint through the entire building structure designed to accommodate structural movement.
C. Contractor: The contractor that installs the Outsulation Plus MD System to the substrate.
D. Dryvit: Dryvit Systems, Inc., the manufacturer of the Outsulation Plus MD System, a Rhode Island corporation.
E. Expansion Joint: A structural discontinuity in the Outsulation Plus MD System.
F. Finish: An acrylic-based coating, available in a variety of textures and colors that is applied over the base coat.
G. Insulation Board: Expanded polystyrene (EPS) insulation board, which is affixed to the substrate and creates a layer of continuous insulation.
H. Panel Erector: The contractor who installs the panelized Outsulation Plus MD System.
I. Panel Fabricator: The contractor who fabricates the panelized Outsulation Plus MD System.
J. Reinforcing Mesh: Glass fiber mesh(es) used to reinforce the base coat and to provide impact resistance.
K. Sheathing: A substrate in sheet form.
L. Substrate: The material to which the Outsulation Plus MD System is affixed.
M. Substrate System: The total wall assembly including the attached substrate to which the Outsulation Plus MD System is affixed.

1.4 SUBMITTALS

A. Submittals shall be in accordance with Division 1.

B. Submittals shall include:

1. Product Data: The contractor shall submit to the Owner/Engineer the manufacturer's product data sheets describing products, which will be used on this project.

2. Shop Drawings for Panelized Construction: The panel fabricator shall prepare and submit to the owner/Engineer complete drawings showing: wall layout, connections, details, expansion joints, and installation sequence.

3. Samples: The contractor shall submit to the owner/Engineer two (2) samples of the EIFS System for each finish, texture and color to be used on the project. The same tools and techniques proposed for the actual installation shall be used. Samples shall be of sufficient size to accurately represent each color and texture being utilized on the project.

4. Test Reports: Copies of selected test reports verifying the performance of the EIFS System.

5. Environmental Product Declaration: Copies of the Environmental Product Declaration (EPD) describing the estimated environmental impacts of the EFIS System.

6. Complete warranty information

1.5 OPERATION AND MAINTENANCE MANUALS

A. Provide operation and Maintenance Manuals in accordance with Division 1.

B. Operation and maintenance manuals shall be provided by manufacturer at least two weeks prior to shipment of major equipment components. Each manual shall be a bound, indexed binder with drawings and parts lists prepared specifically for this project rather than general instructions that are not designed for this project.

1.6 QUALITY ASSURANCE

A. Qualifications

1. System Manufacturer: Shall be Dryvit Systems, Inc. All materials shall be manufactured or sold by Dryvit and shall be purchased from Dryvit or its authorized distributors.

a. Materials shall be manufactured at a facility covered by a current ISO 9001:2008 and ISO 14001:2004 certification. Certification of the facility shall be done by a registrar accredited by the American National Standards Institute, Registrar Accreditation Board (ANSI-RAB).

2. Contractor shall be knowledgeable in the proper installation of the Dryvit Outsulation Plus MD System and shall be experienced and competent in the installation of Exterior Insulation and Finish Systems. Additionally, the contractor shall possess a current Outsulation Plus MD System Trained

Contractor Certificate issued by Dryvit Systems, Inc.

3. Insulation Board Manufacturer shall be listed by Dryvit Systems, Inc., shall be capable of producing the Expanded Polystyrene (EPS) in accordance with the current Dryvit Specification for Insulation Board, DS131, and shall subscribe to the Dryvit Third Party Certification and Quality Assurance Program.

4. Panel Fabricator shall be a Contractor experienced and competent in the fabrication of architectural wall panels and shall possess a current Outsulation Plus MD System Trained Contractor Certificate issued by Dryvit Systems, Inc.

5. Panel Erector shall be experienced and competent in the installation of architectural wall panel systems and shall be

   a. The panel fabricator or
   b. An erector approved by the panel fabricator or
   c. An erector under the direct supervision of the panel fabricator

B. Regulatory Requirements

1. The EPS shall be separated from the interior of the building by a minimum 15-minute thermal barrier.

2. The use and maximum thickness of EPS shall be in accordance with the applicable building codes.

C. Certification

1. The Outsulation Plus MD System shall be recognized for the intended use by the applicable building codes.

D. Mock-Up

1. The contractor shall, before the project commences, provide the Owner/Engineer with a mock-up for approval.

2. The mock-up shall be of suitable size as required to accurately represent the products being installed, as well as each color and texture to be utilized on the project.

3. The mock-up shall be prepared with the same products, tools, equipment and techniques required for the actual applications. The finish used shall be from the same batch that is being used on the project.

4. The approved mock-up shall be available and maintained at the jobsite.

5. For panelized construction, the mock-up shall be available and maintained at the panel fabrication location.

1.7 DELIVERY, STORAGE AND HANDLING

A. All Dryvit materials shall be delivered to the job site in the original, unopened packages with labels intact.

B. Upon arrival, materials shall be inspected for physical damage, freezing or overheating. Questionable materials shall not be used.

1. Materials shall be stored at the job site, and at all times, in a cool, dry location, out of direct sunlight, protected from weather and other sources of damage. Minimum storage temperature shall be:

a. DPR, PMR™, HDP™, Weatherlastic® and E™ Finishes, Color Prime™, Primus®, Genesis® and NCB™,40 °F.
b. For other products, refer to specific product data sheets.

2. Maximum storage temperature shall not exceed 100 °F. NOTE: Minimize exposure of materials to temperatures over 90 °F. Finishes exposed to temperatures over 110 °F for even short periods may exhibit skinning, increased viscosity and should be inspected prior to use.

C. Protect all products from inclement weather and direct sunlight.

1.8 PROJECT CONDITIONS

A. Environmental Requirements

1. Application of wet materials shall not take place during inclement weather unless appropriate protection is provided. Protect materials from inclement weather until they are completely dry.

2. At the time of Dryvit product application, the air and wall surface temperatures shall be from 40 °F minimum to 100 °F maximum for the following products

a. DPR, PMR, HDP, Weatherlastic and E Finishes, Color Prime, Primus, Genesis and NCB.
b. For other products, refer to specific product data sheets.

3. These temperatures shall be maintained with adequate air ventilation and circulation for a minimum of 24 hours (48 hours for Weatherlastic Finishes,

Ameristone, TerraNeo and Lymestone) thereafter, or until the products are completely dry. Refer to published product data sheets for more specific information.

B. Existing Conditions: The contractor shall provide electric power, clean water and a clean work area at the location where the Dryvit materials are to be applied.

1.9 SEQUENCING AND SCHEDULING

A. Installation of the Outsulation System shall be coordinated with other construction trades.

B. Sufficient manpower and equipment shall be employed to ensure a continuous operation, free of cold joints, scaffold lines, texture variations, etc.

1.10 WARRANTY

A. The manufacturer shall provide a 10 year written moisture drainage, materials and installation warranty.

B. The manufacturer shall provide a factory authorized inspector as required during installation to inspect/supervise the installation of the system. The factory authorized inspector shall sign off on the installation, materials installed and methods of installation to ensure the system is installed per manufacturer's recommendations and the warranty is intact.

1.11 DESIGN RESPONSIBILITY

A. It is the responsibility of the manufacturer to determine if a product is suitable for its intended use.

B. The manufacturer shall be responsible for all decisions pertaining to design, detail, structural capability, attachment details, shop drawings and the like.

C. The manufacturer is liable for incorrect materials used, errors or omissions in design, detail, structural capability, attachment details, shop drawings, or the like.

D. The manufacturer through the shop drawing submittal process shall provide the correct materials and installation instructions for the intended use.

E. The manufacturer, through their factory authorized inspector shall ensure the shop drawings and installation instruction are followed correctly.

F. The manufacturer, through their shop drawings and authorized inspector shall be responsible for the system's integrity.

PART 2 - PRODUCTS

2.1 MANUFACTURER

A. These exterior EIFS wall system specifications are based upon Dryvit Outsulation Plus MD System.

B. Product descriptions and nomenclature herein is for the Dryvit Outsulation Plus MD System.

C. All components of the Outsulation Plus MD System shall be supplied or obtained from Dryvit or its authorized distributors. Substitutions or additions of materials other than specified shall not be permitted.

2.2 MATERIALS

A. Portland Cement: Shall be Type I or II, meeting ASTM C 150, white or gray in color, fresh and free of lumps.

B. Water: Shall be clean and free of foreign matter.

2.3 SYSTEM DESCRIPTION

A. General: The Dryvit Outsulation Plus MD System is an Exterior Insulation and Finish System (EIFS), Class PB, consisting of an air/water-resistive barrier, an adhesive, expanded polystyrene insulation board, base coat, reinforcing meshes and finish.

B. Methods of Installation:

1. Field Applied: The Outsulation Plus MD System is applied to the substrate system in place.

2.4 DESIGN REQUIREMENTS

A. Acceptable substrates for the Outsulation Plus MD System shall be:

1. Exterior grade gypsum sheathing meeting ASTM C 1396 (formerly C 79) requirements for water resistant core or Type X core at the time of application of the Outsulation Plus MD System.

2. Exterior sheathing having a water-resistant core with fiberglass mat facers meeting ASTM C 1177.

3. Exterior fiber reinforced cement or calcium silicate boards.

4. APA Exterior or Exposure 1 Rated Plywood, Grade C-D or better, nominal 1/2 in, minimum, installed with the C face out.

5. APA Exterior or Exposure 1 Fire Retardant Treated (FRT) Plywood, Grade C-D or better, nominal 1/2 in, minimum, installed with the C face out.

6. APA Exposure 1 Rated Oriented Strand Board (OSB) nominal 1/2 in, minimum. NOTE: Applications over OSB sheathing requires a minimum of 2 coats of Backstop NT – Smooth or Spray. Backstop NT – Texture is not recommended for the field of wall application over OSB.

7. Unglazed brick, cement plaster, concrete or masonry.

8. Pre-engineered metal building panels with an acceptable substrate.

B. Deflection of the substrate systems shall not exceed 1/240 times the span.

C. The substrate shall be flat within 1/4 in in a 4 ft radius.

D. The slope of inclined surfaces shall not be less than 6:12 (27°) and the length shall not exceed 12 inches.

E. All areas requiring an impact resistance classification higher than "standard", as defined by ASTM E 2486 (formerly EIMA Standard 101.86), shall be as detailed in the drawings and described in the contract documents.

F. Expansion Joints

1. Design and location of expansion joints in the Outsulation Plus MD System is the responsibility of the project designer and shall be noted on the project drawings. As a minimum, expansion joints shall be placed at the following locations:

   a. Where expansion joints occur in the substrate system
   b. Where building expansion joints occur
   c. At floor lines in wood frame construction
   d. At floor lines of non-wood framed buildings where significant movement is expected
   e. Where the Outsulation Plus MD System abuts dissimilar materials
   f. Where the substrate type changes
   g. Where prefabricated panels abut one another
   h. In continuous elevations at intervals not exceeding 75 feet.
   i. Where significant structural movement occurs, such as changes in roof

line, building shape or structural system

G. Terminations

1. Prior to applying the Dryvit Outsulation Plus MD System, wall openings shall be treated with Dryvit AquaFlash System or Flashing Tape. Refer to Dryvit Outsulation Plus MD Installation Details DS110.

2. The Outsulation Plus MD System shall be held back from adjoining materials around openings and penetrations such as windows, doors, and mechanical equipment a minimum of 3/4 in (19 mm) for sealant application. See Dryvit's Outsulation Plus MD System Installation Details, DS110.

3. The system shall be terminated a minimum of 8 inches above finished grade.

4. Sealants

a. Shall be manufactured and supplied by others.
b. Shall be compatible with the Outsulation Plus MD System materials. Refer to current Dryvit Publication DS153 for listing of sealants tested by sealant manufacturer for compatibility.
c. The sealant backer rod shall be closed cell.

H. Dark Colors

1. The use of dark colors must be considered in relation to wall surface temperature as a function of local climatic conditions. Use of dark colors in high temperature climates can affect the performance of the system. Dryvit shall advise Owner/Engineer if the colors chosen are appropriate for this project.

I. Flashing

1. Shall be provided at all roof-wall intersections, windows, doors, chimneys, decks, balconies and other areas as necessary to prevent water from entering behind the Outsulation Plus MD System.

2.5 PERFORMANCE REQUIREMENTS

A. The Outsulation Plus MD System shall have been tested as follows:

1. Air/Water-Resistive Barrier Coating

TEST	TEST METHOD	CRITERIA	RESULTS
Tensile Bond	ASTM C 297/E 2134*	Minimum 15 psi (104 kPa)	Substrate: Minimum 19 psi (131 kPa)

			(Backstop NT) Minimum 24.1 psi (166 kPa) (Backstop DMS) Flashing: Minimum 431 psi (2970 kPa) (Backstop NT) Minimum 140 psi (967 kPa) (Backstop DMS)
Freeze-thaw	ASTM E 2485 Method B*	No deleterious effects after 10 cycles	Passed - No deleterious effects after 10 cycles
Water Resistance	ASTM D 2247*	No deleterious effects after 14 days exposure[1]	No deleterious effects after 14 days exposure
Water Vapor Transmission	ASTM E 96 Proc. B*	Vapor Permeable	Backstop NT: 7 Perms[2] Backstop NT Spray: 7.9 Perms[2] Backstop DMS: 30 Perms
Air Leakage	ASTM E 283	No ICC or ANSI/EIMA Criteria	0.002 cfm/ft^2 (0.01 l/sec/m^2) (Backstop NT)
Air Permeance	ASTM E 2178	No ICC or ANSI/EIMA Criteria	1.2x10^{-4} cfm/ft^2 @ 1.6 psf (0.0006 l/s/m^2 @ 75 Pa) (Backstop NT)
Air Barrier Assembly	ASTM E 2357	No ICC or ANSI/EIMA Criteria	<0.001 cfm/ft^2 @ 6.24 psf (0.05 l/sec m^2 @300 Pa) (Backstop NT)
Nail Sealability	ASTM D 1970	No ICC or ANSI/EIMA Criteria	Passed ABAA Criteria
Structural Performance	ASTM E 1233 Proc. A*	Minimum 10 positive cycles at 1/240 deflection; No cracking in field, at joints or interface with flashing	Passed
Racking	ASTM E 72*	No cracking in field, at joints or interface with flashing at net deflection of 1/8 in (3.2 mm)	Passed
Restrained Environmental	ICC-ES Procedure*	5 cycles; No cracking in field, at joints or interface with flashing	Passed
Water Penetration	ASTM E 331*	No water penetration beyond the inner-most plane of the wall after 15 minutes at 2.86 psf (137 Pa)	Passed
Weathering **UV Exposure** **Accelerated Aging**	ASTM D 2898 Method B*	210 hours of exposure 25 cycles of wetting	Passed Passed

Hydrostatic Pressure Test	ICC-ES Procedure* AATCC 127*	and drying ICC: 21.6 in (549 mm) water column for 5 hours	Passed
Surface Burning Characteristics	ASTM E 84	Flame Spread < 25 Smoke Developed < 450	Passed

* ASTM E 2570 Standard Test Method for Evaluating Water-Resistive Barrier (WRB) Coatings Used Under Exterior Insulation and Finish Systems (EIFS) or EIFS with Drainage, also referred to as AC212 – Acceptance Criteria for Water-Resistive Coatings Used as Water-Resistive Barriers over Exterior Sheathing

1. No cracking, checking, rusting, crazing, erosion, blistering, peeling, or delamination when viewed under 5x magnification
2. Defined as a Class III vapor retarder per the 2009 IBC and IRC

2. Durability

TEST	TEST METHOD	CRITERIA	RESULTS
Abrasion Resistance	ASTM D 968	No deleterious effects after 528 quarts (500 liters)	No deleterious effects after 1056 quarts (1000 liters)
Accelerated Weathering	ASTM G 155 Cycle 1*	No deleterious effects after 2000 hours	No deleterious effects after 5000 hours
	ASTM G 154 Cycle 1* (QUV)		No deleterious effects after 5000 hours
Freeze-Thaw	ASTM E 2485 Method A*	No deleterious effects after 60 cycles	Passed - No deleterious effects after 90 cycles
	ASTM C 67 modified	No deleterious effects after 60 cycles	Passed - No deleterious effects after 60 cycles
	ASTM E 2485 Method B*	No deleterious effects after 10 cycles	Passed - No deleterious effects after 10 cycles
Mildew Resistance	ASTM D 3273	No growth during 28 day exposure period	No growth during 60 day exposure period
Water Resistance	ASTM D 2247*	No deleterious effects after 14 days exposure	No deleterious effects after 42 days exposure
Taber Abrasion	ASTM D 4060	N/A	Passed 1000 cycles
Salt Spray Resistance	ASTM B 117*	No deleterious effects after 300 hours exposure	No deleterious effects after 1000 hours exposure
Water Penetration	ASTM E 331*	No water penetration beyond the inner-most plane of the wall 2 hours at 6.24 psf (299 Pa)	Passed
Water Vapor Transmission	ASTM E 96 Procedure B*	Vapor permeable	EPS 5 perm-inch Base Coat[1] 40 Perms Finish[2] 40 Perms
Drainage Efficiency	ASTM E 2273	Minimum Drainage Efficiency of 90%	Passed

* ASTM E 2568 Standard Specification for PB Exterior Insulation and Finish Systems. 1. Base Coat perm value based on Dryvit Genesis® 2. Finish perm value based on Dryvit Quarzputz

3. Structural

TEST	TEST METHOD	CRITERIA	RESULTS
Tensile Bond	ASTM C 297/E 2134*	Minimum 15 psi (104 kPa) – substrate or insulation failure	Minimum 31 psi (213.6 kPa)
Transverse Wind Load	ASTM E 330*	Withstand positive and negative wind loads as specified by the building code	Minimum 90 psf (4.3 kPa)[1] 16 in o.c. framing, 1/2 in sheathing screw attached at 8 in (203 mm) o.c.
* ASTM E 2568 Standard Specification for PB Exterior Insulation and Finish Systems. 1. All Dryvit components remain intact – for higher wind loads contact Dryvit Systems, Inc.			

4. Impact Resistance: In accordance with ASTM E 2486* (formerly EIMA Standard 101.86):

Reinforcing Mesh[1]/Weight oz/yd² (g/m²)	Minimum Tensile Strengths	EIMA Impact Classification	EIMA Impact Range in-lbs	(Joules)	Impact Test Results in-lbs	(Joules)
Standard - 4.3 (146)	150 lbs/in (27 g/cm)	Standard	25-49	(3-6)	36	(4)
Standard Plus - 6 (203)	200 lbs/in (36 g/cm)	Medium	50-89	(6-10)	56	(6)
Intermediate™ - 12 (407)	300 lbs/in (54 g/cm)	High	90-150	(10-17)	108	(12)
Panzer® 15[2] - 15 (509)	400 lbs/in (71 g/cm)	Ultra High	>150	(>17)	162	(18)
Panzer 20[2] - 20.5 (695)	550 lbs/in (98 g/cm)	Ultra High	>150	(>17)	352	(40)
Detail Mesh® Short Rolls - 4.3 (146)	150 lbs/in (27 g/cm)	n/a	n/a	n/a	n/a	n/a
Corner Mesh™ - 7.2 (244)	274 lbs/in (49 g/cm)	n/a	n/a	n/a	n/a	n/a
* ASTM E 2568 Standard Specification for PB Exterior Insulation and Finish Systems. 1. It shall be colored blue and bear the Dryvit logo for product identification 2. Shall be used in conjunction with Standard Mesh (recommended for areas exposed to high traffic)						

5. Fire performance

TEST	TEST METHOD	CRITERIA	RESULTS
Fire Resistance	ASTM E 119	No effect on the fire resistance of a rated wall assembly	Passed 1 hour non-load bearing

			Passed 2-hour load bearing over wood framing
Ignitability	NFPA 268*	No ignition at 12.5 kw/m^2 at 20 minutes	Passed
Intermediate Multi-Story Fire Test	NFPA 285* (UBC 26-9)	1. Resist flame propagation over the exterior surface 2. Resist vertical spread of flame within combustible core/component of panel from one story to the next 3. Resist vertical spread of flame over the interior surface from one story to the next 4. Resist lateral spread of flame from the compartment of fire origin to adjacent spaces	Passed over steel framing and wood framing
Full Scale Multi-Story[1] (corner test)	ANSI FM 4880	Resist flame propagation over the exterior surface	Passed; No height restrictions*
* ASTM E 2568 Standard Specification for PB Exterior Insulation and Finish Systems. 1. Dryvit FM Products must be specified			

B. The Outsulation Plus MD components shall be tested for

1. Fire

TEST	TEST METHOD	CRITERIA	RESULTS
Surface Burning Characteristics	ASTM E 84*	All components shall have a: Flame Spread ≤ 25 Smoke Developed ≤ 450	Passed
* ASTM E 2568 Standard Specification for PB Exterior Insulation and Finish Systems.			

2. Durability

TEST	TEST METHOD	CRITERIA	RESULTS
Reinforcing Mesh **Alkali Resistance of Reinforcing Mesh**	ASTM E 2098*	120 pli (> 21dN/cm) retained tensile strength after exposure	Passed
EPS (Physical Properties) **Density**	ASTM C 303, D 1622	0.95-1.25 lb/ft^3 (15.2-20.0 kg/m^3)	Passed
Thermal Resistance	ASTM C 177, C 518	4.0 @ 40 °F (4.4 °C) 3.6 @ 75 °F (23.9 °C)	Passed Passed
Water Absorption	ASTM C 272	2.5 % max. by volume	Passed
Oxygen Index	ASTM D 2863	24% min. by volume	Passed
Compressive Strength	ASTM D 1621 Proc. A	10 psi (69 kPa) min.	Passed
Flexural Strength	ASTM C 203	25 psi (172 kPa) min.	Passed
Flame Spread **Smoke Developed**	ASTM E 84* ASTM E 84*	25 max. 450 max.	Passed Passed

* ASTM E 2568 Standard Specification for PB Exterior Insulation and Finish Systems.

2.6 COMPONENTS

A. Air/Water-Resistive Barrier Components

1. Dryvit Backstop NT: A flexible, polymer-based noncementitious water-resistive and air barrier coating available in Texture, Smooth, and Spray.

2. Dryvit Grid Tape™: An open weave fiberglass mesh tape with pressure sensitive adhesive available in rolls 4 in wide by 100 yds long.

3. Dryvit Backstop DMS: A sprayable single step water-resistive membrane/air barrier and adhesive.

4. Backstop DMS is not approved for use over wood based substrates.

B. Flashing Materials: Used to protect substrate edges at terminations.

1. Liquid Applied: An extremely flexible water-based polymer material, ready for use.
   a. Shall be AquaFlash and AquaFlash Mesh

2. Sheet Type:

   a. Shall be Flashing Tape and Surface Conditioner

      1) Dryvit Flashing Tape™: A high density polyethylene film backed with a rubberized asphalt adhesive available in rolls 4 in, 6 in and 9 in wide by 75 ft long.
      2) Dryvit Flashing Tape Surface Conditioner™: A water-based surface conditioner and adhesion promoter for the Dryvit Flashing Tape.

C. Dryvit AP Adhesive™:

1. A moisture cure, urethane-based adhesive used to adhere the Dryvit Drainage Strip™ and Drainage Track.

D. Drainage Track

1. UV treated PVC "J" channel perforated with weep holes, complying with ASTM D 1784 and ASTM C 1063.

2. Drainage track usage is limited to the base of the system at finished grade level when installing system in noncombustible construction. All other horizontal terminations shall utilize the Dryvit Drainage Strip as shown in Outsulation Plus MD Installation Details, DS110 and shall be one of the following:

   a. Starter Trac STWP – without drip edge by Plastic Components, Inc.
   b. Starter Trac STDE – with drip edge by Plastic Components, Inc.
   c. Universal Starter Track by Wind-lock Corporation
   d. Sloped Starter Strip with Drip by Vinyl Corp.

E. Drainage Strip

1. Drainage strip shall be a corrugated plastic sheet material, which provides drainage.

F. Adhesives

1. Adhesives used to adhere the EPS to the air/water-resistive barrier, shall be compatible with the water-resistive barrier and the EPS.

   a. Cementitious: A liquid polymer-based material, which is field mixed with Portland cement.

      1) Shall be Primus, Genesis or Genesis® FM

   b. Ready mixed: A dry blend cementitious, copolymer-based product, field mixed with water.

      1) Shall be Primus® DM, Genesis® DM, Genesis® DMS, Rapidry DM 35-50 or Rapidry DM 50-75

G. Insulation Board

1. Insulation board shall be expanded Polystyrene meeting Dryvit Specification for Insulation Board, DS131.
   a. Thickness of insulation board shall be minimum 1 inch.
   b. The insulation board shall be manufactured by a board supplier listed by Dryvit Systems, Inc.

H. Base Coat

1. Base coat shall be compatible with the EPS insulation board and reinforcing meshes.

   a. Cementitious: A liquid polymer-based material, which is field mixed

with Portland cement.

1) Shall be Primus, Genesis or Genesis FM

b. Noncementitious: A factory-mixed, fully formulated, water-based product.

1) Shall be NCB

c. Ready mixed: A dry blend cementitious, copolymer-based product, field mixed with water.

1) a. Shall be Primus DM, Genesis DM, Genesis DMS, Rapidry DM 35-50 or Rapidry DM 50-75.

I. Reinforcing Mesh

1. Reinforcing mesh shall be a balanced, open weave, glass fiber fabric treated for compatibility with other system materials.

a. Mech for this project shall contain two layers as follows:

1) Standard Plus
2) Panzer 20

b. Each type shall be two different colors for product identification bearing the Dryvit logo.

J. Finish

1. Finish shall be the type, color and texture as selected by the Owner and shall be one or more of the following:

a. Standard DPR (Dirt Pickup Resistance): Water-based, acrylic coating with integral color and texture and formulated with DPR chemistry:

1) Quarzputz® DPR: Open-texture
2) Sandblast®DPR: Medium texture
3) Freestyle® DPR: Fine texture
4) Sandpebble® DPR: Pebble texture
5) Sandpebble® Fine DPR: Fine pebble texture

b. Hydrophobic (HDP™) Finishes: 100% acrylic coating with integral color and texture and formulated with hydrophobic properties:

1) Quarzputz® HDP
2) Sandblast® HDP
3) Sandpebble® HDP
4) Sandpebble® Fine HDP
5) Lymestone™ HDP
6) Finesse™ HDP

c. Water-based, lightweight acrylic coating with integral color and texture and formulated with DPR chemistry:

1) Quarzputz® E
2) Sandpebble® E
3) Sandpebble® Fine E

d. FM: Water-based, acrylic coating with integral color and texture, formulated with PMR chemistry:

1) Sandpebble® FM
2) Sandpebble® Fine FM

e. Specialty: Factory mixed, water-based acrylic:

1) Ameristone: Multi-colored quartz aggregate with a flamed granite appearance.
2) Stone Mist®: Ceramically colored quartz aggregate.
3) Custom Brick: Acrylic polymer-based finish used in conjunction with a proprietary template system to create the look of stone, brick, slate or tile.
4) TerraNeo: 100% acrylic-based finish with large mica chips and multi-colored quartz aggregates.
5) Lymestone: A premixed, 100% acrylic-based finish designed to replicate the appearance of limestone blocks.
6) Reflectit: 100% acrylic coating providing a pearlescent appearance.
7) Finesse™: A Smooth 100% acrylic-based dirt pickup resistance finish.

f. Elastomeric DPR (Dirt Pickup Resistance): Water- based, elastomeric acrylic coating with integral color and texture and formulated with DPR chemistry:

1) Weatherlastic® Quarzputz
2) Weatherlastic® Sandpebble
3) Weatherlastic® Sandpebble Fine
4) Weatherlastic® Adobe

g. Medallion Series PMR™ (Proven Mildew Resistance): Water-based, acrylic coating with integral color and texture and formulated with PMR chemistry:

1) Quarzputz® PMR
2) Sandblast® PMR
3) Freestyle® PMR
4) Sandpebble® PMR
5) Sandpebble® Fine PMR

h. Coatings, Primers and Sealers:

1) Demandit® Smooth
2) Demandit® Sanded
3) HDP™ Water-Repellent Coating
4) Weatherlastic® Smooth
5) Tuscan Glaze™
6) Color Prime
7) Prymit®
8) SealClear™

PART 3 - EXECUTION

3.1 EXAMINATION

A. Prior to installation of the Outsulation Plus MD System, Dryvit shall verify that the substrate:

1. Is of a type listed herein
2. Is flat within 1/4 inch in a 4 foot radius.
3. Is sound, dry, connections are tight; has no surface voids, projections, or other conditions that may interfere with the Outsulation Plus MD System installation or performance.

B. Prior to installation of the Outsulation Plus MD System, Dryvit shall insure that all needed flashings and other waterproofing details have been completed, if such completion is required prior to the Outsulation Plus MD application. Additionally the Dryvit shall ensure that:

1. Metal roof flashing has been installed in accordance with the manufacturer's requirements, Asphalt Roofing Manufacturers Association (ARMA) Standards and Dryvit Outsulation Plus MD Installation Details, DS110, or as otherwise necessary to maintain a watertight envelope.

2. Openings are flashed in accordance with the Outsulation Plus MD System Installation Details, DS110, or as otherwise necessary to prevent water penetration.

3. Chimneys, balconies and decks have been properly flashed.

4. Windows, doors, etc. are installed and flashed per manufacturer's requirements and the Outsulation Plus MD System Installation Details, DS110.

C. Prior to the installation of the Outsulation Plus MD System, Dryvit shall notify the General Contractor, Engineer and Owner of all discrepancies.

3.2 PREPARATION

A. The Outsulation Plus MD materials shall be protected by permanent or temporary means from inclement weather and other sources of damage prior to, during, and following application until completely dry.

B. Protect adjoining work and property during Outsulation Plus MD installation.

C. The substrate shall be prepared as to be free of foreign materials, such as oil, dust, dirt, form-release agents, efflorescence, paint, wax, water repellants, moisture, frost, and any other condition that may inhibit adhesion.

3.3 INSTALLATION

A. The system shall be installed in accordance with the Dryvit Outsulation Plus MD System Application Instructions, DS218.

B. The overall minimum base coat thickness shall be sufficient to fully embed the mesh. The base coat shall be applied in two (2) passes.

C. Sealant shall not be applied directly to textured finishes or base coat surfaces. Dryvit Outsulation Plus MD System surfaces in contact with sealant shall be coated with Demandit Smooth or Color Prime.

D. High impact meshes shall be installed as specified at ground level, high traffic areas and other areas exposed to or susceptible to impact damage.

3.4 FIELD QUALITY CONTROL

A. The contractor shall be responsible for the proper storage and application of the Outsulation Plus MD materials.

B. Dryvit shall certify in writing the quality of work performed relative to the substrate system, details, installation procedures, workmanship and as to the specific products used

are in accordance with manufacturer's recommendations and the warranty is intact.

C. The EPS supplier shall certify in writing that the EPS meets Dryvit's specifications. Dryvit shall confirm compliance.

D. Dryvit shall certify in writing that the sealant application is in accordance with the sealant manufacturer's and Dryvit's recommendations.

3.5 CLEANING

A. All excess Outsulation Plus MD System materials shall be removed from the job site by the contractor in accordance with contract provisions and as required by applicable law.

B. All surrounding areas, where the Dryvit Outsulation Plus MD System has been applied, shall be left free of debris and foreign substances resulting from the contractor's work.

3.6 PROTECTION

A. The Outsulation Plus MD System shall be protected from inclement weather and other sources of damage until dry and permanent protection in the form of flashings, sealants, .

END OF SECTION

SECTION 07411
PREFORMED METAL ROOF PANELS

PART 1 GENERAL

1.1 SECTION INCLUDES

A. Architectural roofing system of preformed steel panels.

B. Fastening system.

C. Factory finishing.

D. Accessories and miscellaneous components.

1.2 REFERENCE STANDARDS

A. ASCE 7 - Minimum Design Loads for Buildings and Other Structures; 2011.

B. ASTM A653/A653M - Standard Specification for Steel Sheet, Zinc-Coated (Galvanized) or Zinc-Iron Alloy-Coated (Galvannealed) by the Hot-Dip Process; 2015.

C. ASTM C1363 - Standard Test Method for Thermal Performance of Building Materials and Envelope Assemblies by Means of a HotBox Apparatus; 2011.

D. ASTM D1970/D1970M - Standard Specification for Self-Adhering Polymer Modified Bituminous Sheet Materials Used as Steep Roofing Underlayment for Ice Dam Protection; 2013.

E. ASTM E96/E96M - Standard Test Methods for Water Vapor Transmission of Materials; 2014.

F. ASTM E1592 - Standard Test Method for Structural Performance of Sheet Metal Roof and Siding Systems by Uniform Static Air Pressure Difference; 2005 (Reapproved 2012).

G. ASTM E1646 - Standard Test Method for Water Penetration of Exterior Metal Roof Panel Systems by Uniform Static Air Pressure Difference; 1995 (Reapproved 2011).

H. ASTM E1680 - Standard Test Method for Rate of Air Leakage Through Exterior Metal Roof Panel Systems; 2011.

I. ICC-ES AC188 - Acceptance Criteria for Roof Underlayments; 2012.

J. ICC-ES AC207 - Acceptance Criteria for Polypropylene Roof Underlayments; 2012.

K. UL 580 - Standard for Tests for Uplift Resistance of Roof Assemblies; Current Edition, Including All Revisions.

1.3 SUBMITTALS

A. See Section 01300 - Administrative Requirements, for submittal procedures.

B. Product Data: Manufacturer's data sheets on each product to be used, including:
   1. Summary of test results, indicating compliance with specified requirements.
   2. Storage and handling requirements and recommendations.
   3. Installation methods.
   4. Specimen warranty.

C. Shop Drawings: Include layouts of roof panels, details of edge and penetration conditions, spacing and type of connections, flashings, underlayments, and special conditions.
   1. Show WORK to be field-fabricated or field-assembled.

D. Selection Samples: For each roofing system specified, submit color chips representing manufacturer's full range of available colors and patterns.

E. Test Reports: Indicate compliance of metal roofing system to specified requirements.

F. Warranty: Submit specified manufacturer's warranty and ensure that forms have been completed in OWNER'S name and are registered with manufacturer.

1.4 QUALITY ASSURANCE

A. Manufacturer Qualifications: Company specializing in the manufacture of roofing systems similar to those required for this PROJECT.
   1. Not less than 5 years of documented experience.

B. Installer Qualifications: Company trained and authorized by roofing system manufacturer.

1.5 DELIVERY, STORAGE, AND HANDLING

A. Provide strippable plastic protection on prefinished roofing panels for removal after installation.

B. Store roofing panels on PROJECT site as recommended by manufacturer to minimizedamage to panels prior to installation.

1.6 WARRANTY

A. See Section 01780 - Closeout Submittals, for additional warranty requirements.

B. Finish Warranty: Provide manufacturer's special warranty covering failure of factory-applied exterior finish on metal roof panels and agreeing to repair or replace panels that show evidence of finish degradation, including significant fading, chalking, cracking, or peeling within specified warranty period of 5 year period from date of Substantial Completion.

C. Waterproofing Warranty: Provide manufacturer's warranty for weathertightness of roofing system, including agreement to repair or replace roofing that fails to keep out water within specified warranty period of 5 years from date of Substantial Completion.

PART 2 PRODUCTS

2.1 MANUFACTURERS

A. Design is based on LokSeam, manufactured byMBCI.

B. Acceptable manufacturers:
   1. Architectural Building Components: www.archmetalroof.com.
   2. ATAS International, Inc: www.atas.com.
   3. Firestone Building Products LLC: www.firestonebpco.com.
   4. Petersen Aluminum Corporation: www.pac-clad.com.

2.2 ARCHITECTURAL METAL ROOF PANELS

A. Architectural Metal Roofing: Provide complete engineered system complying with specified requirements and capable of remaining weathertight while withstanding anticipated movement of substrate and thermally induced movement of roofing system.

B. Metal Panels: Factory-formed panels with factory-applied finish.
   1. Steel Panels:
      a. Zinc-coated steel conforming to ASTM A653/A653M; minimum G90 galvanizing.
      b. Steel Thickness: Minimum 24 gage (0.024inch).
   2. Profile: Standing seam, with minimum 1 3/4 inch seam height; concealed fastener system for field seaming with special tool.
   3. Texture: Smooth, with intermediate ribs for added stiffness.
   4. Length: Maximum possible length to minimize lapped joints. Where lapped joints are unavoidable, space laps so that each sheet spans over three or more supports.
   5. Width: Maximum panel coverage of 18inches.

2.3 ATTACHMENT SYSTEM

A. Concealed System: Provide manufacturer's standard stainless steel or nylon-coated aluminum concealed anchor clips designed for specific roofing system and engineered to meet performance requirements, including anticipated thermal movement.

2.4 PANEL FINISH

A. Fluoropolymer Coating System: Manufacturer's standard multi-coat thermocured coating system, including minimum 70 percent fluoropolymer color topcoat with minimum total dry film thickness of 0.9 mil; color and gloss as selected by ENGINEER from Manufacturer's complete custom line..

2.5 ACCESSORIES AND MISCELLANEOUS ITEMS

A. Miscellaneous Sheet Metal Items: Provide flashings, gutters, downspouts, trim, moldings, closure strips, preformed crickets, caps, and equipment curbs of the same material,thickness,

and finish as used for the roofing panels. Items completely concealed after installation may optionally be made of stainless steel.

B. Rib and Ridge Closures: Provide prefabricated, close-fitting components of steel with corrosion resistant finish or combination steel and closed-cell foam.

C. Sealants:
   1. Exposed Sealant: Elastomeric; silicone, polyurethane, or silyl-terminated polyether/polyurethane.
   2. Concealed Sealant: Non-curing butyl sealant or tape sealant.
   3. Seam Sealant: Factory-applied, non-skinning, non-drying type.

D. Underlayment: Self-adhering rubber-modified asphalt sheet complying with ASTM D1970/D1970M; 22 mil total thickness; with strippable release film and woven polypropylene sheet top surface.
   1. Sheet Thickness: 22 mil (0.022 inch) minimum total thickness.
   2. Self Sealability: Passing nail sealability test specified in ASTM D1970/D1970M.
   3. Low Temperature Flexibility: Passing test specified in ASTM D1970/D1970M.
   4. Water Vapor Permeance: 0.067 perm, maximum, when tested in accordance with ASTM E96/E96M Procedure A (desiccant method).

2.6 FABRICATION

A. Panels: Fabricate panels and accessory items at factory, using manufacturer's standard processes as required to achieve specified appearance and performance requirements.

B. Joints: Factory-install captive gaskets, sealants, or separator strips at panel joints to provide weathertight seals, eliminate metal-to-metal contact, and minimize noise from panel movements.

PART 3 EXECUTION

3.1 EXAMINATION

A. Do not begin installation of preformed metal roof panels until substrates have been properly prepared.

B. If substrate preparation is the responsibility of another installer, notify ENGINEER of unsatisfactory preparation before proceeding.

3.2 PREPARATION

A. Coordinate roofing WORK with provisions for roof drainage, flashing, trim, penetrations, and other adjoining WORK to assure that the completed roof will be free of leaks.

B. Remove protective film from surface of roof panels immediately prior to installation. Strip film carefully, to avoid damage to prefinished surfaces.

C. Separate dissimilar metals by applying a bituminous coating, self-adhering rubberized asphalt sheet, or other permanent method approved by roof panel manufacturer.

D. Where metal will be in contact with wood or other absorbent material subject to wetting, seal joints with sealing compound and apply one coat of heavy-bodied bituminous paint.

3.3 INSTALLATION

A. Overall: Install roofing system in accordance with approved shop drawings and panel manufacturer's instructions and recommendations, as applicable to specific PROJECT conditions. Anchor all components of roofing system securely in place while allowing for thermal and structural movement.
   1. Install roofing system with concealed clips and fasteners, except as otherwise recommended by manufacturer for specific circumstances.
   2. Minimize field cutting of panels. Where field cutting is absolutely required, use methods that will not distort panel profiles. Use of torches for field cutting is absolutely prohibited.

B. Accessories: Install all components required for a complete roofing assembly, including flashings, gutters, downspouts, trim, moldings, closure strips, preformed crickets, caps, equipment curbs, rib closures, ridge closures, and similar roof accessory items.

C. Roof Panels: Install panels in strict accordance with manufacturer's instructions, minimizing transverse joints except at junction with penetrations.
   1. Form weathertight standing seams incorporating concealed clips, using an automatic mechanical seaming device approved by the panel manufacturer.
   2. Provide sealant tape or other approved joint sealer at lapped panel joints.

3.4 CLEANING

A. Clean exposed sheet metal WORK at completion of installation. Remove grease and oil films, excess joint sealer, handling marks, and debris from installation, leaving the WORK clean and unmarked, free from dents, creases, waves, scratch marks, or other damage to the finish.

3.5 PROTECTION

A. Do not permit storage of materials or roof traffic on installed roof panels. Provide temporary walkways or planks as necessary to avoid damage to completed WORK. Protect roofing until completion of PROJECT.

B. Touch-up, repair, or replace damaged roof panels or accessories before the Date of Substantial Completion.

END OF SECTION

SECTION 07620
SHEET METAL FLASHING AND TRIM

PART 1 - GENERAL

1.1 RELATED DOCUMENTS

A. Drawings and general provisions of the Contract, including General and Supplementary Conditions and Division 01 Specification Sections, apply to this Section.

1.2 SUMMARY

A. Section Includes:

1. Manufactured Products:

   a. Manufactured through-wall flashing and counterflashing.
   b. Manufactured reglets and counterflashing.

2. Formed Products:

   a. Formed roof drainage sheet metal fabrications.
   b. Formed wall sheet metal fabrications.

1.3 PERFORMANCE REQUIREMENTS

A. General: Sheet metal flashing and trim assemblies as indicated shall withstand wind loads, structural movement, thermally induced movement, and exposure to weather without failure due to defective manufacture, fabrication, installation, or other defects in construction. Completed sheet metal flashing and trim shall not rattle, leak, or loosen, and shall remain watertight.

1.4 SUBMITTALS

A. Submittals shall be in accordance with Division 1.

B. Product Data: For each type of product indicated. Include construction details, material descriptions, dimensions of individual components and profiles, and finishes for each manufactured product and accessory.

C. Shop Drawings: Show fabrication and installation layouts of sheet metal flashing and trim, including plans, elevations, expansion-joint locations, and keyed details. Distinguish between shop- and field-assembled work. Include the following:

1. Identification of material, thickness, weight, and finish for each item and location in Project.
2. Details for forming sheet metal flashing and trim, including profiles, shapes, seams, and

dimensions.

3. Details for joining, supporting, and securing sheet metal flashing and trim, including layout of fasteners, cleats, clips, and other attachments. Include pattern of seams.
4. Details of termination points and assemblies, including fixed points.
5. Details of expansion joints and expansion-joint covers, including showing direction of expansion and contraction.
6. Details of roof-penetration flashing.
7. Details of edge conditions, including eaves, ridges, valleys, rakes, crickets, and counterflashings as applicable.
8. Details of special conditions.
9. Details of connections to adjoining work.
10. Detail formed flashing and trim at a scale of not less than 1-1/2 inches per 12 inches

D. Samples for Initial Selection: For each type of sheet metal flashing, trim, and accessory indicated with factory-applied color finishes involving color selection.

E. Samples for Verification: For each type of exposed finish required, prepared on Samples of size indicated below:

1. Sheet Metal Flashing: 12 inches long by actual width of unit, including finished seam and in required profile. Include fasteners, cleats, clips, closures, and other attachments.
2. Trim, Metal Closures, Expansion Joints, Joint Intersections, and Miscellaneous Fabrications: 12 inches long and in required profile. Include fasteners and other exposed accessories.
3. Accessories and Miscellaneous Materials: Full-size Sample.
4. Anodized Aluminum Samples: Samples to show full range to be expected for each color required.

F. Qualification Data: For qualified fabricator.

1.5 QUALITY ASSURANCE

A. Fabricator Qualifications: Shop that employs skilled workers who custom fabricate sheet metal flashing and trim similar to that required for this Project and whose products have a record of successful in-service performance.

B. Sheet Metal Flashing and Trim Standard: Comply with SMACNA's "Architectural Sheet Metal Manual" unless more stringent requirements are specified or shown on Drawings.

C. Mockups: Build mockups to verify selections made under sample submittals and to demonstrate aesthetic effects and set quality standards for fabrication and installation.

1. Build mockup of typical roof eave, including built-in gutter, fascia, fascia trim, apron flashing, approximately 10 feet long, including supporting construction cleats, seams, attachments, underlayment, and accessories.
2. Approval of mockups does not constitute approval of deviations from the Contract Documents contained in mockups unless Architect specifically approves such deviations in writing.
3. Approved mockups may become part of the completed Work if undisturbed at time of Substantial Completion.

D. Preinstallation Conference: Conduct conference at Project site.

1. Meet with Owner, Architect, Owner's insurer if applicable, Installer, and installers whose work interfaces with or affects sheet metal flashing and trim including installers of roofing materials, roof accessories, unit skylights, and roof-mounted equipment.
2. Review methods and procedures related to sheet metal flashing and trim.
3. Examine substrate conditions for compliance with requirements, including flatness and attachment to structural members.
4. Review special roof details, roof drainage, roof penetrations, equipment curbs, and condition of other construction that will affect sheet metal flashing.
5. Document proceedings, including corrective measures and actions required, and furnish copy of record to each participant.

1.6 DELIVERY, STORAGE, AND HANDLING

A. Do not store sheet metal flashing and trim materials in contact with other materials that might cause staining, denting, or other surface damage. Store sheet metal flashing and trim materials away from uncured concrete and masonry.

B. Protect strippable protective covering on sheet metal flashing and trim from exposure to sunlight and high humidity, except to the extent necessary for the period of sheet metal flashing and trim installation.

1.7 WARRANTY

A. Warranty: Warranty shall be in accordance with Division 1.

B. Special Warranty on Finishes: Manufacturer's standard form in which manufacturer agrees to repair finish or replace sheet metal flashing and trim that shows evidence of deterioration of factory-applied finishes within specified warranty period.

1. Exposed Panel Finish: Deterioration includes, but is not limited to, the following:

a. Color fading more than 5 Hunter units when tested according to ASTM D 2244.
b. Chalking in excess of a No. 8 rating when tested according to ASTM D 4214.
c. Cracking, checking, peeling, or failure of paint to adhere to bare metal.

2. Finish Warranty Period: 20 years from date of Substantial Completion.

PART 2 - PRODUCTS

2.1 SHEET METALS

A. General: Protect mechanical and other finishes on exposed surfaces from damage by applying a strippable, temporary protective film before shipping.

B. Aluminum Sheet: ASTM B 209, alloy as standard with manufacturer for finish required, with temper as required to suit forming operations and performance required.

1. Exposed Coil-Coated Finishes:

   a. Two-Coat Fluoropolymer: AAMA 620. Fluoropolymer finish containing not less than 70 percent PVDF resin by weight in color coat. Prepare, pretreat, and apply coating to exposed metal surfaces to comply with coating and resin manufacturers' written instructions.

2. Color: As selected by Architect from manufacturer's full range.

3. Concealed Finish: Pretreat with manufacturer's standard white or light-colored acrylic or polyester backer finish, consisting of prime coat and wash coat with a minimum total dry film thickness of 0.5 mil (0.013 mm).

2.2 MISCELLANEOUS MATERIALS

A. General: Provide materials and types of fasteners, protective coatings, separators, sealants, and other miscellaneous items as required for complete sheet metal flashing and trim installation and recommended by manufacturer of primary sheet metal unless otherwise indicated.

B. Fasteners: Wood screws, annular threaded nails, self-tapping screws, self-locking rivets and bolts, and other suitable fasteners designed to withstand design loads and recommended by manufacturer of primary sheet metal or manufactured item.

   1. General: Blind fasteners or self-drilling screws, gasketed, with hex-washer head.

      a. Exposed Fasteners: Heads matching color of sheet metal using plastic caps or factory-applied coating.
      b. Blind Fasteners: High-strength aluminum or stainless-steel rivets suitable for metal being fastened.
      c. Spikes and Ferrules: Same material as gutter; with spike with ferrule matching internal gutter width.

   2. Fasteners for Aluminum Sheet: Aluminum or Series 300 stainless steel.

C. Sealant Tape: Pressure-sensitive, 100 percent solids, gray polyisobutylene compound sealant tape with release-paper backing. Provide permanently elastic, nonsag, nontoxic, nonstaining tape 1/2 inch wide and 1/8 inch thick.

D. Elastomeric Sealant: ASTM C 920, elastomeric silicone polymer sealant; low modulus; of type, grade, class, and use classifications required to seal joints in sheet metal flashing and trim and remain watertight.

E. Butyl Sealant: ASTM C 1311, single-component, solvent-release butyl rubber sealant; polyisobutylene plasticized; heavy bodied for hooked-type expansion joints with limited movement.

F. Epoxy Seam Sealer: Two-part, noncorrosive, aluminum seam-cementing compound, recommended by aluminum manufacturer for exterior nonmoving joints, including riveted joints.

G. Bituminous Coating: Cold-applied asphalt emulsion complying with ASTM D 1187.

H. Asphalt Roofing Cement: ASTM D 4586, asbestos free, of consistency required for application.

2.3 MANUFACTURED SHEET METAL FLASHING AND TRIM

A. Through-Wall Ribbed Sheet Metal Flashing: Manufacture through-wall sheet metal flashing for embedment in masonry with ribs at 3-inch intervals along length of flashing to provide an integral mortar bond. Manufacture through-wall flashing with snaplock receiver on exterior face to receive counterflashing.

B. Reglets: Units of type, material, and profile indicated, formed to provide secure interlocking of separate reglet and counterflashing pieces, and compatible with flashing indicated with factory-mitered and -welded corners and junctions.

1. Manufacturers: Subject to compliance with requirements, provide products by one of the following, or approved equal:

a. Cheney Flashing Company.
b. Fry Reglet Corporation.
c. Heckmann Building Products Inc.
d. Hickman, W. P. Company.
e. Hohmann & Barnard, Inc.; STF Sawtooth Flashing.
f. Keystone Flashing Company, Inc.
g. National Sheet Metal Systems, Inc.
h. Sandell Manufacturing Company, Inc.
i. Or approved equal.

2. Material: Aluminum, 0.024 inch.
3. Surface-Mounted Type: Provide with slotted holes for fastening to substrate, with neoprene or other suitable weatherproofing washers, and with channel for sealant at top edge.Concrete Type: Provide temporary closure tape to keep reglet free of concrete materials, special fasteners for attaching reglet to concrete forms, and guides to ensure alignment of reglet section ends.
4. Masonry Type: Provide with offset top flange for embedment in masonry mortar joint.
5. Accessories:

a. Flexible-Flashing Retainer: Provide resilient plastic or rubber accessory to secure flexible flashing in reglet where clearance does not permit use of standard metal counterflashing or where Drawings show reglet without metal counterflashing.
b. Counterflashing Wind-Restraint Clips: Provide clips to be installed before counterflashing to prevent wind uplift of counterflashing lower edge.

6. Finish: With manufacturer's standard color coating- match trim.

2.4 FABRICATION, GENERAL

A. General: Custom fabricate sheet metal flashing and trim to comply with recommendations in SMACNA's "Architectural Sheet Metal Manual" that apply to design, dimensions, geometry, metal thickness, and other characteristics of item indicated. Fabricate items at the shop to greatest extent possible.

1. Fabricate sheet metal flashing and trim in thickness or weight needed to comply with performance requirements, but not less than that specified for each application and metal.

2. Obtain field measurements for accurate fit before shop fabrication.
3. Form sheet metal flashing and trim without excessive oil canning, buckling, and tool marks and true to line and levels indicated, with exposed edges folded back to form hems.
4. Conceal fasteners and expansion provisions where possible. Exposed fasteners are not allowed on faces exposed to view.

B. Fabrication Tolerances: Fabricate sheet metal flashing and trim that is capable of installation to a tolerance of 1/4 inch in 20 feet on slope and location lines as indicated and within 1/8-inch offset of adjoining faces and of alignment of matching profiles.

C. Fabrication Tolerances: Fabricate sheet metal flashing and trim that is capable of installation to tolerances specified in MCA's "Guide Specification for Residential Metal Roofing."

D. Sealed Joints: Form nonexpansion but movable joints in metal to accommodate elastomeric sealant.

E. Expansion Provisions: Where lapped expansion provisions cannot be used, form expansion joints of intermeshing hooked flanges, not less than 1 inch deep, filled with butyl sealant concealed within joints.

F. Fabricate cleats and attachment devices from same material as accessory being anchored or from compatible, noncorrosive metal.

G. Fabricate cleats and attachment devices of sizes as recommended by SMACNA's "Architectural Sheet Metal Manual" for application, but not less than thickness of metal being secured.Seams: Fabricate nonmoving seams with flat-lock seams. Form seams and seal with elastomeric sealant unless otherwise recommended by sealant manufacturer for intended use.

H. Do not use graphite pencils to mark metal surfaces.

2.5 ROOF DRAINAGE SHEET METAL FABRICATIONS

A. Hanging Gutters: Fabricate to cross section indicated, complete with end pieces, outlet tubes, and other accessories as required. Fabricate in minimum 96-inch long sections. Furnish flat-stock gutter spacers and gutter brackets fabricated from same metal as gutters, of size recommended by SMACNA but not less than twice the gutter thickness. Fabricate expansion joints, expansion-joint covers, and gutter accessories from same metal as gutters.

1. Gutter Style: SMACNA designation K.
2. Expansion Joints: Lap type.
3. Accessories: Continuous removable leaf screen with sheet metal frame and hardware cloth screen.
4. Gutters shall be hung with concealed quick screw type hangers.

B. Downspouts: Fabricate downspouts complete with mitered elbows. Furnish with metal hangers, from same material as downspouts, and anchors.
1. Hanger Style: K
2. Fabricate from the following materials:
   a. Aluminum: 0.024 inch thick.

PART 3 - EXECUTION

3.1 EXAMINATION

A. Examine substrates, areas, and conditions, with Installer present, to verify actual locations, dimensions and other conditions affecting performance of the Work.

1. Verify compliance with requirements for installation tolerances of substrates.
2. Verify that substrate is sound, dry, smooth, clean, sloped for drainage, and securely anchored.
3. Verify that air- or water-resistant barriers have been installed over sheathing or backing substrate to prevent air infiltration or water penetration.

B. For the record, prepare written report, endorsed by Installer, listing conditions detrimental to performance of the Work.

C. Proceed with installation only after unsatisfactory conditions have been corrected.

3.2 INSTALLATION, GENERAL

A. General: Anchor sheet metal flashing and trim and other components of the Work securely in place, with provisions for thermal and structural movement. Use fasteners, protective coatings, separators, sealants, and other miscellaneous items as required to complete sheet metal flashing and trim system.

1. Install sheet metal flashing and trim true to line and levels indicated. Provide uniform, neat seams with minimum exposure of sealant.
2. Install sheet metal flashing and trim to fit substrates and to result in watertight performance. Verify shapes and dimensions of surfaces to be covered before fabricating sheet metal.
3. Space cleats not more than 12 inches apart. Anchor each cleat with two fasteners. Bend tabs over fasteners.
4. Install exposed sheet metal flashing and trim without excessive oil canning, buckling, and tool marks.
5. Install sealant tape where indicated.
6. Torch cutting of sheet metal flashing and trim is not permitted.
7. Do not use graphite pencils to mark metal surfaces.

B. Metal Protection: Where dissimilar metals will contact each other or corrosive substrates, protect against galvanic action by painting contact surfaces with bituminous coating or by other permanent separation as recommended by SMACNA.

1. Coat back side of uncoated aluminum sheet metal flashing and trim with bituminous coating where flashing and trim will contact wood, ferrous metal, or cementitious construction.
2. Underlayment: Where installing metal flashing directly on cementitious or wood substrates, install a course of felt underlayment and cover with a slip sheet or install a course of polyethylene sheet.

C. Expansion Provisions: Provide for thermal expansion of exposed flashing and trim. Space movement joints at a maximum of 10 feet with no joints allowed within 24 inches of corner or intersection. Where lapped expansion provisions cannot be used or would not be sufficiently watertight, form expansion joints of intermeshing hooked flanges, not less than 1 inch deep, filled with sealant concealed within joints.

D. Fastener Sizes: Use fasteners of sizes that will penetrate wood sheathing not less than 1-1/4 inches for nails and metal decking not less than recommended by fastener manufacturer to achieve maximum pull-out resistance.

1. Seal joints as shown and as required for watertight construction.Where sealant-filled joints are used, embed hooked flanges of joint members not less than 1 inch into sealant. Form joints to completely conceal sealant. When ambient temperature at time of installation is moderate, between 40 and 70 deg F, set joint members for 50 percent movement each way. Adjust setting proportionately for installation at higher ambient temperatures. Do not install sealant-type joints at temperatures below 40 deg F.
2. Prepare joints and apply sealants to comply with requirements in Division 07 Section "Joint Sealants."
3. Do not solder aluminum sheet.

3.3 ROOF DRAINAGE SYSTEM INSTALLATION

A. General: Install sheet metal roof drainage items to produce complete roof drainage system according to SMACNA recommendations and as indicated. Coordinate installation of roof perimeter flashing with installation of roof drainage system.

B. Hanging Gutters: Join sections with lapped joints sealed with sealant. Provide for thermal expansion. Attach gutters at eave or fascia to firmly anchored gutter straps spaced not more than 36 inches apart. Provide end closures and seal watertight with sealant. Slope to downspouts.

1. Fasten gutter spacers to front and back of gutter.
2. Loosely lock straps to front gutter bead and anchor to roof deck.
3. Install gutter with expansion joints at locations indicated, but not exceeding, 50 feet apart. Install expansion-joint caps.
4. Install continuous gutter screens on gutters with noncorrosive fasteners, removable for cleaning gutters.

C. Downspouts: Join sections with 1-1/2-inch telescoping joints.

1. Provide hangers with fasteners designed to hold downspouts securely to walls. Locate hangers at top and bottom and at approximately 60 inches o.c. in between.
2. Provide elbows at base of downspout to direct water away from building.
3. Connect downspouts to underground drainage system indicated.

D. Expansion-Joint Covers: Install expansion-joint covers at locations and of configuration indicated. Lap joints a minimum of 4 inches in direction of water flow.

3.4 ROOF FLASHING INSTALLATION

A. General: Install sheet metal flashing and trim to comply with performance requirements, and SMACNA's "Architectural Sheet Metal Manual." Provide concealed fasteners where possible, set units true to line, and level as indicated. Install work with laps, joints, and seams that will be permanently watertight and weather resistant.

B. Roof Edge Flashing: Anchor to resist uplift and outward forces according to recommendations in SMACNA's "Architectural Sheet Metal Manual" and as indicated. Interlock bottom edge of roof edge flashing with continuous cleat anchored to substrate at staggered 3-inch centers.

C. Copings: Anchor to resist uplift and outward forces according to recommendations in SMACNA's "Architectural Sheet Metal Manual" and as indicated.

1. Interlock exterior bottom edge of coping with continuous cleat anchored to substrate at 24-inch centers.

D. Counterflashing: Coordinate installation of counterflashing with installation of base flashing. Insert counterflashing in reglets or receivers and fit tightly to base flashing. Extend counterflashing 4 inches (100 mm) over base flashing. Lap counterflashing joints a minimum of 4 inches (100 mm) and bed with sealant. Secure in a waterproof manner by means of snap-in installation and sealant or lead wedges and sealant.

E. Roof-Penetration Flashing: Coordinate installation of roof-penetration flashing with installation of roofing and other items penetrating roof. Seal with elastomeric sealant and clamp flashing to pipes that penetrate roof.

3.5 WALL FLASHING INSTALLATION

A. General: Install sheet metal wall flashing to intercept and exclude penetrating moisture according to SMACNA recommendations and as indicated. Coordinate installation of wall flashing with installation of wall-opening components such as windows, doors, and louvers.

B. Through-Wall Flashing: Installation of through-wall flashing is specified in Division 04 Section "Unit Masonry"

C. Opening Flashings in Frame Construction: Install continuous head, sill, jamb, and similar flashings to extend 4 inches beyond wall openings.

3.6 ERECTION TOLERANCES

A. Installation Tolerances: Shim and align sheet metal flashing and trim within installed tolerance of 1/4 inch in 20 feet on slope and location lines as indicated and within 1/8-inch offset of adjoining faces and of alignment of matching profiles.

3.7 CLEANING AND PROTECTION

A. Clean exposed metal surfaces of substances that interfere with uniform oxidation and weathering.

B. Clean off excess sealants.

C. Remove temporary protective coverings and strippable films as sheet metal flashing and trim are installed unless otherwise indicated in manufacturer's written installation instructions. On completion of installation, remove unused materials and clean finished surfaces. Maintain in a clean condition during construction.

D. Replace sheet metal flashing and trim that have been damaged or that have deteriorated beyond successful repair by finish touchup or similar minor repair procedures.

END OF SECTION

SECTION 07631
GUTTERS AND DOWNSPOUTS

PART 1 GENERAL

1.1 SECTION INCLUDES

A. Pre-finished aluminum gutters and downspouts.

1.2 RELATED REQUIREMENTS

A. Section 05500 - Metal Fabrications: Downspout boots.

B. Section 07620 - Sheet Metal Flashing and Trim.

1.3 REFERENCE STANDARDS

A. ASTM B209 - Standard Specification for Aluminum and Aluminum-Alloy Sheet and Plate; 2014.

B. ASTM B209M - Standard Specification for Aluminum and Aluminum-Alloy Sheet and Plate [Metric]; 2014.

C. SMACNA (ASMM) - Architectural Sheet Metal Manual; Sheet Metal and Air Conditioning Contractors' National Association; 2012.

1.4 DESIGN REQUIREMENTS

A. Conform to SMACNA (ASMM) for sizing components for rainfall intensity determined by a storm occurrence of 1 in 10 years.

B. Conform to applicable code for size and method of rain water discharge.

C. Maintain one copy of each document on site.

1.5 SUBMITTALS

A. See Section 01300 - Administrative Requirements, for submittal procedures.

B. Product Data: Provide data on prefabricated components.

1.6 DELIVERY, STORAGE, AND HANDLING

A. Stack material to prevent twisting, bending, or abrasion, and to provide ventilation. Slope to drain.

B. Prevent contact with materials that could cause discoloration, staining, or damage.

PART 2 PRODUCTS

2.1 MANUFACTURERS

A. Gutters and Downspouts:
   1. ATAS International, Inc: www.atas.com.
   2. Cheney Flashing Company: www.cheneyflashing.com.
   3. SAF Perimeter Systems, a division of Southern Aluminum Finishing Company, Inc.: www.saf.com/persys.
   4. W.P. Hickman company: www.wph.com.

2.2 MATERIALS

A. Pre-Finished Aluminum Sheet: ASTM B209 (ASTM B209M); 0.032 inch thick.
   1. Finish: Plain, shop pre-coated with modified silicone coating.
   2. Color: As scheduled.

2.3 COMPONENTS

A. Gutters: Profile as indicated. SMACNA Style K

B. Downspouts: SMACNA Rectangular profile.

2.4 ACCESSORIES

2.5 FABRICATION

A. Form gutters and downspouts of profiles and size indicated.

B. Fabricate with required connection pieces.

C. Form sections square, true, and accurate in size, in maximum possible lengths, free of distortion or defects detrimental to appearance or performance. Allow for expansion at joints.

D. Hem exposed edges of metal.

E. Fabricate gutter and downspout accessories; seal watertight.

2.6 FACTORY FINISHING

A. Fluoropolymer Coating: Superior Performance Organic Finish, AAMA 2605; multiple coat, thermally cured fluoropolymer finish system; color as selected from manufacturer's standard colors.

PART 3 EXECUTION

3.1 EXAMINATION

A. Verify existing conditions before starting WORK.

B. Verify that surfaces are ready to receive WORK.

3.2 PREPARATION

A. Paint concealed metal surfaces and surfaces in contact with dissimilar metals with protective backing paint to a minimum dry film thickness of 15 mil.

3.3 INSTALLATION

A. Install gutters, downspouts, and accessories in accordance with manufacturer's instructions.

B. Sheet Metal: Join lengths with formed seams sealed watertight. Flash and seal gutters to downspouts and accessories.

C. Slope gutters 1/8 inch per foot.

D. Solder metal joints for full metal surface contact. After soldering, wash metal clean with neutralizing solution and rinse with water.

E. Connect downspouts to downspout boots at 6 inches above grade. Seal connection watertight.

END OF SECTION

SECTION 07720
ROOF ACCESSORIES

PART 1 GENERAL

1.1 SECTION INCLUDES

A. Manufactured curbs, equipment rails, and pedestals.

B. Snow guards.

1.2 RELATED REQUIREMENTS

A. Section 07620 - Sheet Metal Flashing and Trim: Roof accessory items fabricated from sheet metal.

B. Section 07710 - Manufactured Roof Specialties: Other manufactured roof items.

1.3 REFERENCE STANDARDS

A. ASTM A653/A653M - Standard Specification for Steel Sheet, Zinc-Coated (Galvanized) or Zinc-Iron Alloy-Coated (Galvannealed) by the Hot-Dip Process; 2015.

B. FM P7825 - Approval Guide; Factory Mutual Research Corporation; current edition.

C. MSS SP-58 - Pipe Hangers and Supports - Materials, Design, Manufacture, Selection, Application, and Installation; Manufacturers Standardization Society of the Valve and Fittings Industry, Inc.; 2009.

1.4 SUBMITTALS

A. See Section 01300 - Administrative Requirements, for submittal procedures.

B. Product Data: Manufacturer's data sheets on each product to be used.
   1. Preparation instructions and recommendations.
   2. Storage and handling requirements and recommendations.
   3. Installation methods.
   4. Maintenance requirements.

C. Warranty Documentation:
   1. Submit manufacturer warranty.
   2. Ensure that forms have been completed in OWNER'S name and registered with manufacturer.

1.5 DELIVERY, STORAGE, AND HANDLING

A. Store products in manufacturer's unopened packaging until ready for installation.

B. Store products under cover and elevated above grade.

1.6 WARRANTY

A. See Section 01780 - Closeout Submittals, for additional warranty requirements.

B. Correct defective WORK within a five year period after Date of Substantial Completion.

PART 2 PRODUCTS

2.1 MANUFACTURED CURBS

A. Manufactured Curbs, Equipment Rails, and Other Roof Mounting Assemblies:

B. Manufactured Curbs, Equipment Rails, and Other Roof Mounting Assemblies:
Factory-assembled hollow sheet metal construction with fully mitered and welded corners, integral counterflashing, internal reinforcing, and top side and edges formed to shed water.
   1. Sheet Metal: Hot-dip zinc coated steel sheet complying with ASTM A653/A653M, SS Grade 33; G60 coating designation; 18 gage, 0.048 inch thick.
   2. Roofing Cants: Provide integral sheet metal roofing cants dimensioned to begin slope at top of roofing insulation; 1:1 slope; minimum cant height 4 inches.
   3. Manufacture curb bottom and mounting flanges for installation directly on roof deck, not on insulation; match slope and configuration of roof deck.

4. Provide the layouts and configurations shown on the drawings.

C. Curbs Adjacent to Roof Openings: Provide curb on all sides of opening, with top of curb horizontal for equipment mounting.
   1. Provide preservative treated wood nailers along top of curb.
   2. Insulate inside curbs with 1-1/2 inch thick fiberglass insulation.
   3. Height Above Finished Roof Surface: 8 inches, minimum.
   4. Height Above Roof Deck: 14 inches, minimum.

2.2 SNOW GUARDS

A. Unit Snow Guards: Individual projecting metal shapes, attached between standing seams of roof panel, and mechanically fastened to roof deck.
   1. Projecting Metal Shapes: Bronze castings, triangular spike design.
   2. Finish: Polyurethane coating, color to match roof.
   3. Placement: As recommended by manufacturer.
   4. Manufacturers:
      a. Alpine Snow Guards: www.alpinesnowguards.com.
      b. Berger Building Products: www.bergerbp.com.
      c. Rocky Mountain Snow Guards, Inc.: www.rockymountainsnowguards.com.
      d. Sno Gem: www.snogem.com.

PART 3 EXECUTION

3.1 EXAMINATION

A. Do not begin installation until substrates have been properly prepared.

B. If substrate preparation is the responsibility of another installer, notify ENGINEER of unsatisfactory preparation before proceeding.

3.2 PREPARATION

A. Clean surfaces thoroughly prior to installation.

B. Prepare surfaces using the methods recommended by the manufacturer for achieving the best result for the substrate under the PROJECT conditions.

3.3 INSTALLATION

A. Install in accordance with manufacturer's instructions, in manner that maintains roofing weather integrity.

3.4 CLEANING

A. Clean installed WORK to like-new condition.

3.5 PROTECTION

A. Protect installed products until completion of PROJECT.

B. Touch-up, repair or replace damaged products before Substantial Completion.

END OF SECTION

SECTION 07920
JOINT SEALANTS

PART 1 - GENERAL

1.1 RELATED DOCUMENTS

A. Drawings and general provisions of the Contract, including General and Supplementary Conditions and Division 01 Specification Sections, apply to this Section.

1.2 SUMMARY

A. Section Includes:

1. Silicone joint sealants.

1.3 SUBMITTALS

A. Submittals shall be in accordance with Division 1.

B. Product Data: For each joint-sealant product indicated.

C. Samples for Initial Selection: Manufacturer's color charts consisting of strips of cured sealants showing the full range of colors available for each product exposed to view.

D. Samples for Verification: For each kind and color of joint sealant required, provide Samples with joint sealants in 1/2-inch- wide joints formed between two 6-inch long strips of material matching the appearance of exposed surfaces adjacent to joint sealants.

E. Joint-Sealant Schedule: Include the following information:

1. Joint-sealant application, joint location, and designation.
2. Joint-sealant manufacturer and product name.
3. Joint-sealant formulation.
4. Joint-sealant color.

F. Product Certificates: For each kind of joint sealant and accessory, from manufacturer.

1.4 QUALITY ASSURANCE

A. Source Limitations: Obtain each kind of joint sealant from single source from single manufacturer.

1.5 PROJECT CONDITIONS

A. Do not proceed with installation of joint sealants under the following conditions:

1. When ambient and substrate temperature conditions are outside limits permitted by joint-sealant manufacturer or are below 40 deg F.
2. When joint substrates are wet.
3. Where joint widths are less than those allowed by joint-sealant manufacturer for applications indicated.
4. Where contaminants capable of interfering with adhesion have not yet been removed from joint substrates.

1.6 WARRANTY

A. Warranty shall be in accordance with Division 1.

PART 2 - PRODUCTS

2.1 MATERIALS, GENERAL

A. Compatibility: Provide joint sealants, backings, and other related materials that are compatible with one another and with joint substrates under conditions of service and application, as demonstrated by joint-sealant manufacturer, based on testing and field experience.

B. VOC Content of Interior Sealants: Provide sealants and sealant primers for use inside the weatherproofing system that comply with the following limits for VOC content when calculated according to 40 CFR 59, Part 59, Subpart D (EPA Method 24):

1. Architectural Sealants: 250 g/L.
2. Sealant Primers for Nonporous Substrates: 250 g/L.
3. Sealant Primers for Porous Substrates: 775 g/L.

C. Liquid-Applied Joint Sealants: Comply with ASTM C 920 and other requirements indicated for each liquid-applied joint sealant specified, including those referencing ASTM C 920 classifications for type, grade, class, and uses related to exposure and joint substrates.

1. Suitability for Immersion in Liquids. Where sealants are indicated for Use I for joints that will be continuously immersed in liquids, provide products that have undergone testing according to ASTM C 1247. Liquid used for testing sealants is deionized water, unless otherwise indicated.

D. Stain-Test-Response Characteristics: Where sealants are specified to be non-staining to porous substrates, provide products that have undergone testing according to ASTM C 1248 and have not stained porous joint substrates indicated for Project.

E. Suitability for Contact with Food: Where sealants are indicated for joints that will come in repeated contact with food, provide products that comply with 21 CFR 177.2600.

F. Colors of Exposed Joint Sealants: As indicated by manufacturer's designations.

2.2 SILICONE JOINT SEALANTS

A. Single-Component, Nonsag, Neutral-Curing Silicone Joint Sealant: ASTM C 920, Type S, Grade NS, Class 100/50, for Use NT.

1. Products: Subject to compliance with requirements, available products that may be incorporated into the Work include, but are not limited to, the following:

   a. Dow Corning Corporation; 790, NS Parking Structure Sealant.
   b. GE Advanced Materials - Silicones; SilPruf LM SCS2700.
   c. May National Associates, Inc.; Bondaflex Sil 290, Bondaflex Sil 728 NS.
   d. Pecora Corporation; 301 NS, 311 NS, 890, 890FTS.
   e. Sika Corporation, Construction Products Division; SikaSil-C990.
   f. Tremco Incorporated; Spectrem 1.

2.3 JOINT SEALANT BACKING

A. General: Provide sealant backings of material that are nonstaining; are compatible with joint substrates, sealants, primers, and other joint fillers; and are approved for applications indicated by sealant manufacturer based on field experience and laboratory testing.

B. Cylindrical Sealant Backings: ASTM C 1330, Type C (closed-cell material with a surface skin, and of size and density to control sealant depth and otherwise contribute to producing optimum sealant performance.

C. Bond-Breaker Tape: Polyethylene tape or other plastic tape recommended by sealant manufacturer for preventing sealant from adhering to rigid, inflexible joint-filler materials or joint surfaces at back of joint. Provide self-adhesive tape where applicable.

2.4 MISCELLANEOUS MATERIALS

A. Primer: Material recommended by joint-sealant manufacturer where required for adhesion of sealant to joint substrates indicated, as determined from preconstruction joint-sealant-substrate tests and field tests.

B. Cleaners for Nonporous Surfaces: Chemical cleaners acceptable to manufacturers of sealants and sealant backing materials, free of oily residues or other substances capable of staining or harming joint substrates and adjacent nonporous surfaces in any way, and formulated to promote optimum adhesion of sealants to joint substrates.

C. Masking Tape: Nonstaining, nonabsorbent material compatible with joint sealants and surfaces adjacent to joints.

PART 3 - EXECUTION

3.1 EXAMINATION

A. Examine joints indicated to receive joint sealants, with Installer present, for compliance with requirements for joint configuration, installation tolerances, and other conditions affecting joint-sealant performance.

B. Proceed with installation only after unsatisfactory conditions have been corrected.

3.2 PREPARATION

A. Surface Cleaning of Joints: Clean out joints immediately before installing joint sealants to comply with joint-sealant manufacturer's written instructions and the following requirements:

1. Remove all foreign material from joint substrates that could interfere with adhesion of joint sealant, including dust, paints (except for permanent, protective coatings tested and approved for sealant adhesion and compatibility by sealant manufacturer), old joint sealants, oil, grease, waterproofing, water repellents, water, surface dirt, and frost.
2. Clean porous joint substrate surfaces by brushing, grinding, mechanical abrading, or a combination of these methods to produce a clean, sound substrate capable of developing optimum bond with joint sealants. Remove loose particles remaining after cleaning operations above by vacuuming or blowing out joints with oil-free compressed air. Porous joint substrates include the following:

    a. Concrete.
    b. Masonry.

3. Remove laitance and form-release agents from concrete.
4. Clean nonporous joint substrate surfaces with chemical cleaners or other means that do not stain, harm substrates, or leave residues capable of interfering with adhesion of joint sealants. Nonporous joint substrates include the following:

    a. Metal.

B. Joint Priming: Prime joint substrates where recommended by joint-sealant manufacturer or as indicated by preconstruction joint-sealant-substrate tests or prior experience. Apply primer to comply with joint-sealant manufacturer's written instructions. Confine primers to areas of joint-sealant bond; do not allow spillage or migration onto adjoining surfaces.

C. Masking Tape: Use masking tape where required to prevent contact of sealant or primer with adjoining surfaces that otherwise would be permanently stained or damaged by such contact or by cleaning methods required to remove sealant smears. Remove tape immediately after tooling without disturbing joint seal.

3.3 INSTALLATION OF JOINT SEALANTS

A. General: Comply with joint-sealant manufacturer's written installation instructions for products and applications indicated, unless more stringent requirements apply.

B. Sealant Installation Standard: Comply with recommendations in ASTM C 1193 for use of joint sealants as applicable to materials, applications, and conditions indicated.

C. Install sealant backings of kind indicated to support sealants during application and at position required to produce cross-sectional shapes and depths of installed sealants relative to joint widths that allow optimum sealant movement capability.

1. Do not leave gaps between ends of sealant backings.
2. Do not stretch, twist, puncture, or tear sealant backings.
3. Remove absorbent sealant backings that have become wet before sealant application and replace them with dry materials.

D. Install bond-breaker tape behind sealants where sealant backings are not used between sealants and backs of joints.

E. Install sealants using proven techniques that comply with the following and at the same time backings are installed:

1. Place sealants so they directly contact and fully wet joint substrates.
2. Completely fill recesses in each joint configuration.
3. Produce uniform, cross-sectional shapes and depths relative to joint widths that allow optimum sealant movement capability.

F. Tooling of Nonsag Sealants: Immediately after sealant application and before skinning or curing begins, tool sealants according to requirements specified in subparagraphs below to form smooth, uniform beads of configuration indicated; to eliminate air pockets; and to ensure contact and adhesion of sealant with sides of joint.

1. Remove excess sealant from surfaces adjacent to joints.
2. Use tooling agents that are approved in writing by sealant manufacturer and that do not discolor sealants or adjacent surfaces.
3. Provide concave joint profile per Figure 8A in ASTM C 1193, unless otherwise indicated.
4. Provide flush joint profile where indicated per Figure 8B in ASTM C 1193.
5. Provide recessed joint configuration of recess depth and at locations indicated per Figure 8C in ASTM C 1193.

a. Use masking tape to protect surfaces adjacent to recessed tooled joints.

3.4 CLEANING

A. Clean off excess sealant or sealant smears adjacent to joints as the Work progresses by methods and with cleaning materials approved in writing by manufacturers of joint sealants and of products in which joints occur.

3.5 PROTECTION

A. Protect joint sealants during and after curing period from contact with contaminating substances and from damage resulting from construction operations or other causes so sealants are without deterioration or damage at time of Substantial Completion. If, despite such protection, damage or deterioration occurs, cut out and remove damaged or deteriorated joint sealants immediately so installations with repaired areas are indistinguishable from original work.

3.6 JOINT-SEALANT SCHEDULE

A. Joint-Sealant Application: Exterior joints in horizontal traffic surfaces.

1. Joint Locations:

a. Control and expansion joints in brick pavers.
b. Isolation and contraction joints in cast-in-place concrete slabs.
c. Tile control and expansion joints.
d. Joints between different materials listed above.

2. Silicone Joint Sealant: Single component, nonsag, traffic grade, neutral curing
3. Joint-Sealant Color: As selected by Architect from manufacturer's full range of colors

B. Joint-Sealant Application: Interior joints in vertical surfaces and horizontal nontraffic surfaces.

1. Joint Locations:

   a. Control and expansion joints on exposed interior surfaces of exterior walls.
   b. Perimeter joints of exterior openings where indicated.
   c. Tile control and expansion joints.
   d. Vertical joints on exposed surfaces of interior unit masonry concrete walls, and partitions.
   e. Joints on underside of plant-precast structural concrete beams and planks.
   f. Perimeter joints between interior wall surfaces and frames of interior doors windows and louvers.
   g. Other joints as indicated.

END OF SECTION

SECTION 08111
HOLLOW METAL DOORS AND FRAMES

PART 1 - GENERAL

1.1 RELATED DOCUMENTS

A. Drawings and general provisions of the Contract, including General and Supplementary Conditions and Division 01 Specification Sections, apply to this Section.

1.2 SUMMARY

A. Section Includes:

1. Standard hollow metal doors and frames.

1.3 DEFINITIONS

A. Minimum Thickness: Minimum thickness of base metal without coatings.

B. Standard Hollow Metal Work: Hollow metal work fabricated according to ANSI/SDI A250.8.

1.4 SUBMITTALS

A. Submittals shall be in accordance with Division 1.

B. Product Data: For each type of product indicated. Include construction details, material descriptions, core descriptions, and finishes.

C. Shop Drawings: Include the following:

1. Elevations of each door design.
2. Details of doors, including vertical and horizontal edge details and metal thicknesses.
3. Frame details for each frame type, including dimensioned profiles and metal thicknesses.
4. Locations of reinforcement and preparations for hardware.
5. Details of each different wall opening condition.
6. Details of anchorages, joints, field splices, and connections.
7. Details of accessories.
8. Details of moldings, removable stops, and glazing.

D. Samples for Initial Selection: For units with factory-applied color finishes.

E. Samples for Verification:

1. For each type of exposed finish required, prepared on Samples of not less than 3 by 5 inches.
2. For the following items, prepared on Samples about 12 by 12 inches to demonstrate compliance with requirements for quality of materials and construction:

a. Doors: Show vertical-edge, top, and bottom construction; core construction; and hinge and other applied hardware reinforcement. Include separate section showing glazing if applicable.
b. Frames: Show profile, corner joint, floor and wall anchors, and silencers. Include separate section showing fixed hollow metal panels and glazing if applicable.

F. Other Action Submittals:

1. Schedule: Provide a schedule of hollow metal work prepared by or under the supervision of supplier, using same reference numbers for details and openings as those on Drawings. Coordinate with door hardware schedule.

G. Product Test Reports: Based on evaluation of comprehensive tests performed by a qualified testing agency, for each type of hollow metal door and frame assembly.

1.5 QUALITY ASSURANCE

A. Source Limitations: Obtain hollow metal work from single source from single manufacturer.

1.6 DELIVERY, STORAGE, AND HANDLING

A. Deliver hollow metal work palletized, wrapped, or crated to provide protection during transit and Project-site storage. Do not use nonvented plastic.

1. Provide additional protection to prevent damage to finish of factory-finished units.

B. Deliver welded frames with two removable spreader bars across bottom of frames, tack welded to jambs and mullions.

C. Store hollow metal work under cover at Project site. Place in stacks of five units maximum in a vertical position with heads up, spaced by blocking, on minimum 4-inch high wood blocking. Do not store in a manner that traps excess humidity.

1. Provide minimum 1/4-inch space between each stacked door to permit air circulation.

1.7 PROJECT CONDITIONS

A. Field Measurements: Verify actual dimensions of openings by field measurements before fabrication.

1.8 COORDINATION

A. Coordinate installation of anchorages for hollow metal frames. Furnish setting drawings, templates, and directions for installing anchorages, including sleeves, concrete inserts, anchor bolts, and items with integral anchors. Deliver such items to Project site in time for installation.

PART 2 - PRODUCTS

2.1 MANUFACTURERS

A. Manufacturers: Subject to compliance with requirements, available manufacturers offering products that may be incorporated into the Work include, but are not limited to, the following:

1. Amweld Building Products, LLC.
2. Benchmark; a division of Therma-Tru Corporation.
3. Ceco Door Products; an Assa Abloy Group company.
4. Curries Company; an Assa Abloy Group company.
5. Deansteel Manufacturing Company, Inc.
6. Firedoor Corporation.
7. Fleming Door Products Ltd.; an Assa Abloy Group company.
8. Habersham Metal Products Company.
9. Karpen Steel Custom Doors & Frames.
10. Kewanee Corporation (The).
11. Mesker Door Inc.
12. Pioneer Industries, Inc.
13. Security Metal Products Corp.
14. Steelcraft; an Ingersoll-Rand company.
15. Windsor Republic Doors.

2.2 MATERIALS

A. Cold-Rolled Steel Sheet: ASTM A 1008/A 1008M, Commercial Steel (CS), Type B; suitable for exposed applications.

B. Hot-Rolled Steel Sheet: ASTM A 1011/A 1011M, Commercial Steel (CS), Type B; free of scale, pitting, or surface defects; pickled and oiled.

C. Frame Anchors: ASTM A 591/A 591M, Commercial Steel (CS), 40Z coating designation; mill phosphatized.

1. For anchors built into exterior walls, steel sheet complying with ASTM A 1008/A 1008M or ASTM A 1011/A 1011M, hot-dip galvanized according to ASTM A 153/A 153M, Class B.

D. Inserts, Bolts, and Fasteners: Hot-dip galvanized according to ASTM A 153/A 153M.

E. Powder-Actuated Fasteners in Concrete: Fastener system of type suitable for application indicated, fabricated from corrosion-resistant materials, with clips or other accessory devices for attaching hollow metal frames of type indicated.

F. Grout: ASTM C 476, except with a maximum slump of 4 inches, as measured according to ASTM C 143/C 143M.

2.3 STANDARD HOLLOW METAL DOORS

A. General: Provide doors of design indicated, not less than thickness indicated; fabricated with smooth surfaces, without visible joints or seams on exposed faces unless otherwise indicated. Comply with ANSI/SDI A250.8.

1. Design: Flush panel.
2. Core Construction: Manufacturer's standard kraft-paper honeycomb, polystyrene, polyurethane, polyisocyanurate, mineral-board, or vertical steel-stiffener core.
3. Vertical Edges for Single-Acting Doors: Manufacturer's standard.
   a. Beveled Edge: 1/8 inch in 2 inches.
4. Vertical Edges for Double-Acting Doors: Round vertical edges with 2-1/8-inch radius.
5. Top and Bottom Edges: Closed with flush or inverted 0.042-inch thick, end closures or channels of same material as face sheets.
6. Tolerances: Comply with SDI 117, "Manufacturing Tolerances for Standard Steel Doors and Frames."

B. Exterior Doors: Face sheets fabricated from metallic-coated steel sheet. Provide doors complying with requirements indicated below by referencing ANSI/SDI A250.8 for level and model and ANSI/SDI A250.4 for physical performance level:
1. Level 3 and Physical Performance Level A (Extra Heavy Duty), Model 1 (Full Flush).

C. Interior Doors: Face sheets fabricated from cold-rolled steel sheet. Provide doors complying with requirements indicated below by referencing ANSI/SDI A250.8 for level and model and ANSI/SDI A250.4 for physical performance level:
1. Level 3 and Physical Performance Level A (Extra Heavy Duty), Model 1 (Full Flush).

D. Hardware Reinforcement: Fabricate according to ANSI/SDI A250.6 with reinforcing plates from same material as door face sheets.

E. Fabricate concealed stiffeners and hardware reinforcement from either cold- or hot-rolled steel sheet.

2.4 STANDARD HOLLOW METAL FRAMES

A. General: Comply with ANSI/SDI A250.8 and with details indicated for type and profile.

B. Interior Frames: Fabricated from cold-rolled steel sheet

1. Fabricate frames with mitered or coped corners.
2. Fabricate frames as full profile welded unless otherwise indicated.
3. Fabricate knocked-down, drywall slip-on frames for in-place gypsum board partitions.
4. Frames for Level 3 Steel Doors: 0.053-inch thick steel sheet.

C. Hardware Reinforcement: Fabricate according to ANSI/SDI A250.6 with reinforcement plates from same material as frames.

2.5 FRAME ANCHORS

A. Jamb Anchors:

1. Masonry Type: Adjustable strap-and-stirrup or T-shaped anchors to suit frame size, not less than 0.042 inch thick, with corrugated or perforated straps not less than 2 inches wide by 10 inches long; or wire anchors not less than 0.177 inch thick.
2. Postinstalled Expansion Type for In-Place Concrete or Masonry: Minimum 3/8-inch-diameter bolts with expansion shields or inserts. Provide pipe spacer from frame to wall, with throat reinforcement plate, welded to frame at each anchor location.

B. Floor Anchors: Formed from same material as frames, not less than 0.042 inch thick, and as follows:

1. Monolithic Concrete Slabs: Clip-type anchors, with two holes to receive fasteners.
2. Separate Topping Concrete Slabs: Adjustable-type anchors with extension clips, allowing not less than 2-inch height adjustment. Terminate bottom of frames at finish floor surface.

2.6 ACCESSORIES

A. Grout Guards: Formed from same material as frames, not less than 0.016 inch thick.

2.7 FABRICATION

A. Fabricate hollow metal work to be rigid and free of defects, warp, or buckle. Accurately form metal to required sizes and profiles, with minimum radius for thickness of metal. Where practical, fit and assemble units in manufacturer's plant. To ensure proper assembly at Project site, clearly identify work that cannot be permanently factory assembled before shipment.

B. Tolerances: Fabricate hollow metal work to tolerances indicated in SDI 117.

C. Hollow Metal Doors:

1. Exterior Doors: Provide weep-hole openings in bottom of exterior doors to permit moisture to escape. Seal joints in top edges of doors against water penetration.

D. Hollow Metal Frames: Where frames are fabricated in sections due to shipping or handling limitations, provide alignment plates or angles at each joint, fabricated of same thickness metal as frames.

1. Welded Frames: Weld flush face joints continuously; grind, fill, dress, and make smooth, flush, and invisible.
2. Provide countersunk, flat- or oval-head exposed screws and bolts for exposed fasteners unless otherwise indicated.
3. Grout Guards: Weld guards to frame at back of hardware mortises in frames to be grouted.
4. Floor Anchors: Weld anchors to bottom of jambs and mullions with at least four spot welds per anchor.
5. Jamb Anchors: Provide number and spacing of anchors as follows:

a. Masonry Type: Locate anchors not more than 18 inches from top and bottom of frame. Space anchors not more than 32 inches o.c. and as follows:
   1) Three anchors per jamb from 60 to 90 inches high.

b. Compression Type: Not less than two anchors in each jamb.

6. Door Silencers: Except on weather-stripped doors, drill stops to receive door silencers as follows. Keep holes clear during construction.

   a. Single-Door Frames: Drill stop in strike jamb to receive three door silencers.

E. Fabricate concealed stiffeners, edge channels, and hardware reinforcement from either cold- or hot-rolled steel sheet.

F. Hardware Preparation: Factory prepare hollow metal work to receive templated mortised hardware; include cutouts, reinforcement, mortising, drilling, and tapping according to the Door Hardware Schedule and templates furnished as specified in Division 08 Section "Door Hardware."

1. Locate hardware as indicated, or if not indicated, according to ANSI/SDI A250.8.
2. Reinforce doors and frames to receive nontemplated, mortised and surface-mounted door hardware.
3. Comply with applicable requirements in ANSI/SDI A250.6 and ANSI/DHI A115 Series specifications for preparation of hollow metal work for hardware.

2.8 STEEL FINISHES

A. Prime Finish: Apply manufacturer's standard primer immediately after cleaning and pretreating.

1. Shop Primer: Manufacturer's standard, fast-curing, lead- and chromate-free primer complying with ANSI/SDI A250.10 acceptance criteria; recommended by primer manufacturer for substrate; compatible with substrate and field-applied coatings despite prolonged exposure.

2.9 Color and Gloss: as selected by architect from manufacturer's full range of color.

PART 3 - EXECUTION

3.1 EXAMINATION

A. Examine substrates, areas, and conditions, with Installer present, for compliance with requirements for installation tolerances and other conditions affecting performance of the Work.

B. Examine roughing-in for embedded and built-in anchors to verify actual locations before frame installation.

C. For the record, prepare written report, endorsed by Installer, listing conditions detrimental to performance of the Work.

D. Proceed with installation only after unsatisfactory conditions have been corrected.

3.2 PREPARATION

A. Remove welded-in shipping spreaders installed at factory. Restore exposed finish by grinding, filling, and dressing, as required to make repaired area smooth, flush, and invisible on exposed faces.

B. Prior to installation, adjust and securely brace welded hollow metal frames for squareness, alignment, twist, and plumbness to the following tolerances:

1. Squareness: Plus or minus 1/16 inch, measured at door rabbet on a line 90 degrees from jamb perpendicular to frame head.
2. Alignment: Plus or minus 1/16 inch, measured at jambs on a horizontal line parallel to plane of wall.
3. Twist: Plus or minus 1/16 inch, measured at opposite face corners of jambs on parallel lines, and perpendicular to plane of wall.
4. Plumbness: Plus or minus 1/16 inch, measured at jambs on a perpendicular line from head to floor.

C. Drill and tap doors and frames to receive nontemplated, mortised, and surface-mounted door hardware.

3.3 INSTALLATION

A. General: Install hollow metal work plumb, rigid, properly aligned, and securely fastened in place; comply with Drawings and manufacturer's written instructions.

B. Hollow Metal Frames: Install hollow metal frames of size and profile indicated. Comply with ANSI/SDI A250.11.

1. Set frames accurately in position, plumbed, aligned, and braced securely until permanent anchors are set. After wall construction is complete, remove temporary braces, leaving surfaces smooth and undamaged.

    a. At fire-protection-rated openings, install frames according to NFPA 80.
    b. Where frames are fabricated in sections because of shipping or handling limitations, field splice at approved locations by welding face joint continuously; grind, fill, dress, and make splice smooth, flush, and invisible on exposed faces.
    c. Install frames with removable glazing stops located on secure side of opening.
    d. Install door silencers in frames before grouting.
    e. Remove temporary braces necessary for installation only after frames have been properly set and secured.
    f. Check plumbness, squareness, and twist of frames as walls are constructed. Shim as necessary to comply with installation tolerances.
    g. Field apply bituminous coating to backs of frames that are filled with grout containing antifreezing agents.

2. Floor Anchors: Provide floor anchors for each jamb and mullion that extends to floor, and secure with postinstalled expansion anchors.

    a. Floor anchors may be set with powder-actuated fasteners instead of postinstalled expansion anchors if so indicated and approved on Shop Drawings.

3. Masonry Walls: Coordinate installation of frames to allow for solidly filling space between frames and masonry with grout.
4. Concrete Walls: Solidly fill space between frames and concrete with grout. Take precautions, including bracing frames, to ensure that frames are not deformed or damaged by grout forces.
5. In-Place Concrete or Masonry Construction: Secure frames in place with postinstalled expansion anchors. Countersink anchors, and fill and make smooth, flush, and invisible on exposed faces.
6. Installation Tolerances: Adjust hollow metal door frames for squareness, alignment, twist, and plumb to the following tolerances:

    a. Squareness: Plus or minus 1/16 inch, measured at door rabbet on a line 90 degrees from jamb perpendicular to frame head.
    b. Alignment: Plus or minus 1/16 inch, measured at jambs on a horizontal line parallel to plane of wall.
    c. Twist: Plus or minus 1/16 inch, measured at opposite face corners of jambs on parallel lines, and perpendicular to plane of wall.
    d. Plumbness: Plus or minus 1/16 inch, measured at jambs at floor.

C. Hollow Metal Doors: Fit hollow metal doors accurately in frames, within clearances specified below. Shim as necessary.

1. Non-Fire-Rated Standard Steel Doors:

    a. Jambs and Head: 1/8 inch plus or minus 1/16 inch.
    b. Between Bottom of Door and Top of Threshold: Maximum 3/8 inch (9.5 mm).
    c. Between Bottom of Door and Top of Finish Floor (No Threshold): Maximum 3/4 inch.

3.4 ADJUSTING AND CLEANING

A. Final Adjustments: Check and readjust operating hardware items immediately before final inspection. Leave work in complete and proper operating condition. Remove and replace defective work, including hollow metal work that is warped, bowed, or otherwise unacceptable.

B. Remove grout and other bonding material from hollow metal work immediately after installation.

C. Prime-Coat Touchup: Immediately after erection, sand smooth rusted or damaged areas of prime coat and apply touchup of compatible air-drying, rust-inhibitive primer.

D. Metallic-Coated Surfaces: Clean abraded areas and repair with galvanizing repair paint according to manufacturer's written instructions.

END OF SECTION

SECTION 08200
SLIDING WINDOW

PART 1 - GENERAL

1.1 SUMMARY

A. This Section specifies a sliding window to be installed in the Wastewater Pump Station Building.

1.2 SUBMITTALS

A. Provide submittals in accordance with Division 1.

B. Shop Drawings

1. The CONTRACTOR shall submit complete shop drawings of all equipment furnished for this PROJECT as covered by these specifications. The CONTRACTOR's submittal must include a certification that the submitted material describes exactly the equipment to be provided or a list of deviations from the specifications with an explanation of each deviation.

1.3 Operation and Maintenance Manuals

A. Provide operation and maintenance manuals in accordance with Division 1.

B. Operation and maintenance manuals shall be provided by manufacturer at least two weeks prior to shipment of major equipment components. Each manual shall be a bound, indexed binder with drawings and parts lists prepared specifically for this PROJECT rather than general instructions that are not designed for this PROJECT.

1.4 QUALITY ASSURANCE

A. Qualifications

1. Manufacturer's Qualifications:

a. The equipment manufacturer shall modify their standard equipment to meet the minimum values specified for dimensions, design, and the intent of this specification.

b. Manufacturers regularly engaged in the manufacture of the equipment as specified herein and who can demonstrate equipment of this specified design, in actual service for a period of not less than 10 years will be considered as acceptable manufacturers.

c. Manufacturers shall show evidence of quality assurance in manufacturing and supplying equipment essential in details to the equipment herein specified.

2. Component Supply and Compatibility:

a. Obtain all equipment included in this Section, regardless of the component manufacturer, from the equipment supplier for sole source responsibility.

b. The equipment supplier to review and approve or prepare all Shop Drawings and other submittals for all components furnished under this Section.

1.5 DELIVERY, STORAGE, AND HANDLING

A. Packing, Shipping, Handling, and Unloading

1. Deliver materials to the Site to ensure uninterrupted progress of the WORK. Deliver anchor bolts and anchorage devices, which are to be embedded in cast-in-place concrete in ample time to prevent delay of that WORK.

B. Acceptance at Site

1. All boxes, crates, and packages shall be inspected by CONTRACTOR upon delivery to the Site. CONTRACTOR shall notify ENGINEER, in writing, if any loss or damage exists to equipment or components. Replace loss and repair damage to new condition in accordance with manufacturer's instructions.

C. Storage and Protection

1. Store materials to permit easy access for inspection and identification. Keep all material off the ground, using pallets, platforms, or other supports. Protect steel members and packaged materials from corrosion and deterioration.

2. Store all equipment in covered storage off the ground and prevent condensation and in accordance with the manufacturer's recommendations for long-term storage.

1.6 WARRANTY

A. Warranty shall be in accordance with Division 1.

B. Any such defects, which occur within the stipulated guaranty period, shall be repaired, replaced, or made good at no cost to the OWNER.

C. Window is covered by West Window Lifetime Limited Warranty.

PART 2 - PRODUCTS

2.1 MANUFACTURER

A. Manufacturer shall be West Window Corporation, located at 226 Industrial Park, Martinsville, Virginia. (P.O. Box 3071, Martinsville, VA 24115, phone 276-638-2394.), or approved equal.

2.2 DESCRIPTION

A. Window shall be 36" wide x 24" high. One pane shall be fixed and one pane shall slide.

B. Exterior side of the window shall face the mechanical room; interior side shall be in the electrical room.

2.3 CERTIFICATION

A. Window shall conform to AAMA/NWWDA 101/I.S.2-97 & AAMA 1503.1-88/ASTM F-588 specification and meet all applicable criteria for HS-C30 certified windows.

2.4 MATERIALS

A. Frame and sash main members are made of T6063-T6 aluminum alloy extrusions with a poured in channel urethane thermal barrier, debridged to resist temperature transfer through the extrusion. Typical extrusion wall thickness is .062 inches.

2.5 CONSTRUCTION

A. Frame components are assembled using double screw coped corner construction and are secured by #8 x 1" 410 hardness stainless steel screws. Frame corner seams are sealed with a low modulus, non acetic silicone sealant. Frame depth is 2-5/8". An extruded aluminum combination interlock/fixed meeting rail is used to provide strength and stability to the frame.

B. Active sash components are joined at the corner using double screw coped corner construction and are fastened with 410 hardness stainless steel screws set in extruded screw bosses.

2.6 GLAZING

A. Active sash is channel glazed using a flexible vinyl glazing gasket along the perimeter of a sealed insulating glass unit. Active sash may be re- glazed if necessary using existing sash rails. The fixed sash is interior glazed using sealed insulating glass with a silicone back-bedding and secured with a snap-in rigid vinyl glazing bead. Fixed sash may be re-glazed by removing the interior snap-in glazing bead.

B. Standard INSULATING GLASS UNITS have an overall thickness of 7/8" and consist of two lites of glass and one air space. The air space is created by a Warm- Edge TSS (Thermoset Spacer Technology) polymer spacer system. The edge seal consists of a uniform layer of hot melt butyl sealant. Insulating glass seal durability meets ASTM E2188-02, ASTM E2189-02, & ASTM E2190-02 specifications.

C. Glazing shall consist of clear, tempered glass.

2.7 HARDWARE

A. Window is equipped with spring loaded extruded aluminum claw-type locks that engage a keeper rail that is extruded onto the jamb.

B. Double metal rollers with nylon housing are used at the bottom of the active sash.

C. Weep holes are employed using a plastic cover located six inches from each end of the exterior sill face.

2.8 WEATHERSEALS

A. Two rows of center fin wool pile weather-stripping are used along the stiles of the active sash. One row of center fin wool pile weather-stripping is used on active jamb stile. Two rows of center fin wool pile weather-stripping are used at the at the active sash top and bottom rails and at the active meeting rail stile.

2.9 FINISHES

A. All aluminum extrusions in master frame, sash, sash lock, and screen shall be provided with a clear anodized finish.

PART 3 - EXECUTION

3.1 INSTALLATION

A. Installation of window shall be done in a professional manner. Window shall be set plumb and square in opening with no twisting or distorting of the window, and shall be properly anchored. Frame sill shall be flat and properly supported. A non-hardening sealant compatible with aluminum shall be provided by the installer and applied by the installer in sufficient quantity to provide a watertight seal between the window and opening.

B. Installation shall be in accordance with manufacturer's recommendations.

3.2 OPERATION

A. After installation, window shall operate smoothly with no binding of the active sash. Active sash shall slide easily and be removable to the inside for cleaning. Sash locks shall positively engage the lock keeper rail when in the closed and locked position.

END OF SECTION

SECTION 08332
OVERHEAD COILING DOORS

PART 1 - GENERAL

1.1 RELATED DOCUMENTS

A. Drawings and general provisions of the Contract, including General and Supplementary Conditions and Division 01 Specification Sections, apply to this Section.

1.2 SUMMARY

A. Section Includes:

1. Service doors.

1.3 PERFORMANCE REQUIREMENTS

A. Delegated Design: Design overhead coiling doors, including comprehensive engineering analysis by a qualified professional engineer, using performance requirements and design criteria indicated.

B. Structural Performance, Exterior Doors: Exterior overhead coiling doors shall withstand the wind loads, the effects of gravity loads, and loads and stresses within limits and under conditions indicated according to SEI/ASCE 7.

1. Wind Loads: As indicated on Drawings.

2. Deflection Limits: Design overhead coiling doors to withstand design wind load without evidencing permanent deformation or disengagement of door components.

C. Seismic Performance: Overhead coiling doors shall withstand the effects of earthquake motions determined according to SEI/ASCE 7.

1. The term "withstand" means "the unit will remain in place without separation of any parts from the device when subjected to the seismic forces specified and the emergency-egress-door component will be fully operational after the seismic event.
2. Seismic Component Importance Factor: 1.0.

D. Operation Cycles: Provide overhead coiling door components and operators capable of operating for not less than number of cycles indicated for each door. One operation cycle is complete when a door is opened from the closed position to the fully open position and returned to the closed position.

1.4 SUBMITTALS

A. Product Data: For each type and size of overhead coiling door and accessory. Include the following:

1. Construction details, material descriptions, dimensions of individual components, profiles for slats, and finishes.
2. Rated capacities, operating characteristics, electrical characteristics, and furnished accessories.

B. Shop Drawings: For each installation and for special components not dimensioned or detailed in manufacturer's product data. Include plans, elevations, sections, details, and attachments to other work.

1. Detail equipment assemblies and indicate dimensions, weights, loads, required clearances, method of field assembly, components, and location and size of each field connection.

C. Samples for Initial Selection: Manufacturer's finish charts showing full range of colors and textures available for units with factory-applied finishes.

1. Include similar Samples of accessories involving color selection.

D. Samples for Verification: For each type of exposed finish required, prepared on Samples of size indicated below.

1. Curtain Slats: 12 inches.
2. Bottom Bar: 6 inches (150 mm) long
3. Guides: 6 inches (150 mm) long.
4. Brackets: 6 inches (150 mm) square.
5. Hood: 6 inches (150 mm) square.

E. Qualification Data: For qualified Installer.

F. Seismic Qualification Certificates: For overhead coiling doors, accessories, and components, from manufacturer.

G. Maintenance Data: For overhead coiling doors to include in maintenance manuals.

1.5 QUALITY ASSURANCE

A. Installer Qualifications: Manufacturer's authorized representative who is trained and approved for both installation and maintenance of units required for this Project.

B. Source Limitations: Obtain overhead coiling doors from single source from single manufacturer.

1. Obtain operators and controls from overhead coiling door manufacturer.

PART 2 - PRODUCTS

2.1 DOOR CURTAIN MATERIALS AND CONSTRUCTION

A. Door Curtains: Fabricate overhead coiling-door curtain of interlocking metal slats, designed to withstand wind loading indicated, in a continuous length for width of door without splices. Unless otherwise indicated, provide slats of thickness and mechanical properties recommended by door manufacturer for performance, size, and type of door indicated, and as follows:

1. Steel Door Curtain Slats: Zinc-coated (galvanized), cold-rolled structural steel sheet; complying with ASTM A 653/A 653M, with G90 (Z275) zinc coating; nominal sheet thickness (coated) of 0.028 inch (0.71 mm) and as required to meet requirements.
2. Gasket Seal: Provide insulated slats with manufacturer's standard interior-to-exterior thermal break or with continuous gaskets between slats.

B. Endlocks for Service Doors: Malleable-iron casings galvanized after fabrication, secured to curtain slats with galvanized rivets or high-strength nylon. Provide locks on not less than alternate curtain slats for curtain alignment and resistance against lateral movement.

C. Bottom Bar for Service Doors: Consisting of two angles, each not less than 1-1/2 by 1-1/2 by 1/8 inch thick; fabricated from manufacturer's standard hot-dip galvanized steel, stainless steel, or aluminum extrusions to match curtain slats and finish.

D. Curtain Jamb Guides: Manufacturer's standard angles or channels and angles of same material and finish as curtain slats unless otherwise indicated, with sufficient depth and strength to retain curtain, to allow curtain to operate smoothly, and to withstand loading. Slot bolt holes for guide adjustment. Provide removable stops on guides to prevent overtravel of curtain.

1. Removable Posts and Jamb Guides for Counter Doors: Manufacturer's standard.

2. Thresholds: Equip pass doors with integral thresholds that comply with egress and accessibility requirements of authorities having jurisdiction.

2.2 HOOD

A. General: Form sheet metal hood to entirely enclose coiled curtain and operating mechanism at opening head. Contour to fit end brackets to which hood is attached. Roll and reinforce top and bottom edges for stiffness. Form closed ends for surface-mounted hoods and fascia for any portion of between-jamb mounting that projects beyond wall face. Equip hood with intermediate support brackets as required to prevent sagging.

1. Galvanized Steel: Nominal 0.028-inch- (0.71-mm-) thick, hot-dip galvanized steel sheet with G90 (Z275) zinc coating, complying with ASTM A 653/A 653M.

2. Exterior-Mounted Doors: Fabricate hood to act as weather protection and with a perimeter sealant-joint-bead profile for applying joint sealant.

2.3 LOCKING DEVICES

A. Locking Device Assembly: Fabricate with cylinder lock, spring-loaded dead bolt, operating handle, cam plate, and adjustable locking bars to engage through slots in tracks.

B. Chain Lock Keeper: Suitable for padlock.

2.4 CURTAIN ACCESSORIES

A. Weatherseals: Equip each exterior door with weather-stripping gaskets fitted to entire perimeter of door for a weathertight installation, unless otherwise indicated.

1. At door head, use 1/8-inch thick, replaceable, continuous sheet secured to inside of hood.
2. At door jambs, use replaceable, adjustable, continuous, flexible, 1/8-inch thick seals of flexible vinyl, rubber, or neoprene.

B. Push/Pull Handles: Equip each push-up-operated or emergency-operated door with lifting handles on each side of door, finished to match door.

1. Provide pull-down straps or pole hooks for doors more than 84 inches high.

2.5 COUNTERBALANCING MECHANISM

A. General: Counterbalance doors by means of manufacturer's standard mechanism with an adjustable-tension, steel helical torsion spring mounted around a steel shaft and contained in a spring barrel connected to top of curtain with barrel rings. Use grease-sealed bearings or self-lubricating graphite bearings for rotating members.

B. Counterbalance Barrel: Fabricate spring barrel of manufacturer's standard hot-formed, structural-quality, welded or seamless carbon-steel pipe, of sufficient diameter and wall thickness to support rolled-up curtain without distortion of slats and to limit barrel deflection to not more than 0.03 in./ft. of span under full load.

C. Spring Balance: One or more oil-tempered, heat-treated steel helical torsion springs. Size springs to counterbalance weight of curtain, with uniform adjustment accessible from outside barrel. Secure ends of springs to barrel and shaft with cast-steel barrel plugs.

D. Torsion Rod for Counterbalance Shaft: Fabricate of manufacturer's standard cold-rolled steel, sized to hold fixed spring ends and carry torsional load.

E. Brackets: Manufacturer's standard mounting brackets of either cast iron or cold-rolled steel plate.

2.6 MANUAL DOOR OPERATORS

A. Equip door with manufacturer's recommended manual door operator unless another type of door operator is indicated.

B. Push-up Door Operation: Design counterbalance mechanism so required lift or pull for door operation does not exceed 25 lbf .

2.7 DOOR ASSEMBLY

A. Insulated Service Door: Overhead coiling door formed with curtain of interlocking metal slats.

1. Manufacturers: Subject to compliance with requirements, available manufacturers offering products that may be incorporated into the Work include, but are not limited to, the following:

a. ACME Rolling Doors.
b. Alpine Overhead Doors, Inc.
c. AlumaTek, Inc.
d. C.H.I. Overhead Doors.
e. City-Gates.
f. Cookson Company.
g. Cornell Iron Works, Inc.
h. Dynamic Closures Corp.
i. Lawrence Roll-Up Doors, Inc.
j. Mahon Door Corporation.
k. McKeon Rolling Steel Door Company, Inc.
l. Metro Door.
m. Overhead Door Corporation.
n. QMI Security Solutions.
o. Raynor.
p. Southwestern Steel Rolling Door Co.
q. Wayne-Dalton Corp.

B. Operation Cycles: Not less than 50,000.

1. Include tamperproof cycle counter.

C. Curtain R-Value: 5.0 deg F x h x sq. ft./Btu .

D. Door Curtain Material: Galvanized steel.

E. Door Curtain Slats: Flat profile slats of 1-1/2-inch center-to-center height.

F. Curtain Jamb Guides: Stainless steel exposed finish matching curtain slats. Provide continuous integral wear strips to prevent metal-to-metal contact and to minimize operational noise.

G. Hood: Match curtain material and finish

1. Shape: Square
2. Mounting: As shown on drawings.

H. Integral Frame, Hood, and Fascia for Counter Door: Galvanized steel.

I. Locking Devices: Equip door with locking device assembly

1. Locking Device Assembly: Cremone type, both jamb sides locking bars, operable from and outside with cylinders.

J. Manual Door Operator: Push-up operation

1. Provide operator with through-wall shaft operation.
2. Provide operator with manufacturer's standard removable operating arm.

K. Door Finish:
1. Baked-Enamel or Powder-Coated Finish: Color as selected by Architect from manufacturer's full range.

2.8 GENERAL FINISH REQUIREMENTS

A. Comply with NAAMM's "Metal Finishes Manual for Architectural and Metal Products" for recommendations for applying and designating finishes.

B. Appearance of Finished Work: Noticeable variations in same piece are not acceptable. Variations in appearance of adjoining components are acceptable if they are within the range of approved Samples and are assembled or installed to minimize contrast.

PART 3 - EXECUTION

3.1 EXAMINATION

A. Examine substrates areas and conditions, with Installer present, for compliance with requirements for substrate construction and other conditions affecting performance of the Work.

B. Examine locations of electrical connections.

C. Proceed with installation only after unsatisfactory conditions have been corrected.

3.2 INSTALLATION

A. Install overhead coiling doors and operating equipment complete with necessary hardware, anchors, inserts, hangers, and equipment supports; according to manufacturer's written instructions and as specified.

B. Install overhead coiling doors, hoods, and operators at the mounting locations indicated for each door.

C. Accessibility: Install overhead coiling doors, switches, and controls along accessible routes in compliance with regulatory requirements for accessibility.

3.3 STARTUP SERVICE

A. Engage a factory-authorized service representative to perform startup service.

1. Perform installation and startup checks according to manufacturer's written instructions.
2. Test and adjust controls and safeties. Replace damaged and malfunctioning controls and equipment.

3.4 ADJUSTING

A. Adjust hardware and moving parts to function smoothly so that doors operate easily, free of warp, twist, or distortion.

B. Lubricate bearings and sliding parts as recommended by manufacturer.

C. Adjust seals to provide weathertight fit around entire perimeter.

3.5 DEMONSTRATION

A. Engage a factory-authorized service representative to train Owner's maintenance personnel to adjust, operate, and maintain overhead coiling doors.

END OF SECTION 08332

SECTION 08710
DOOR HARDWARE

PART 1 - GENERAL

1.1 RELATED DOCUMENTS

A. Drawings and general provisions of the Contract, including General and Supplementary Conditions and Division 01 Specification Sections, apply to this Section.

1.2 SUMMARY

A. Section includes:

1. Mechanical door hardware for the following:

a. Swinging doors.

1.3 SUBMITTALS

A. All submittals shall be in accordance with Division 01.

B. Product Data: For each type of product indicated. Include construction and installation details, material descriptions, dimensions of individual components and profiles, and finishes.

C. Samples for Initial Selection: For plastic protective trim units in each finish, color, and texture required for each type of trim unit indicated.

D. Other Action Submittals:

1. Door Hardware Schedule: Prepared by or under the supervision of Installer, detailing fabrication and assembly of door hardware, as well as installation procedures and diagrams. Coordinate final door hardware schedule with doors, frames, and related work to ensure proper size, thickness, hand, function, and finish of door hardware.

a. Submittal Sequence: Submit door hardware schedule concurrent with submissions of Product Data, Samples, and Shop Drawings. Coordinate submission of door hardware schedule with scheduling requirements of other work to facilitate the fabrication of other work that is critical in Project construction schedule.
b. Format: Comply with scheduling sequence and vertical format in DHI's "Sequence and Format for the Hardware Schedule." Double space entries, and number and date each page.
c. Format: Use same scheduling sequence and format and use same door numbers as in the Contract Documents.
d. Content: Include the following information:

1) Identification number, location, hand, fire rating, size, and material of each door and frame.

2) Locations of each door hardware set, cross-referenced to Drawings on floor plans and to door and frame schedule.
3) Complete designations, including name and manufacturer, type, style, function, size, quantity, function, and finish of each door hardware product.
4) Fastenings and other pertinent information.
5) Explanation of abbreviations, symbols, and codes contained in schedule.
6) Mounting locations for door hardware.
7) List of related door devices specified in other Sections for each door and frame.

2. Keying Schedule: Prepared by or under the supervision of Installer, detailing Owner's final keying instructions for locks. Include schematic keying diagram and index each key set to unique door designations that are coordinated with the Contract Documents.

E. Product Certificates: For electrified door hardware, from the manufacturer.

1. Certify that door hardware approved for use on types and sizes of labeled fire-rated doors complies with listed fire-rated door assemblies.

F. Product Test Reports: For compliance with accessibility requirements, based on evaluation of comprehensive tests performed by manufacturer and witnessed by a qualified testing agency, for door hardware on doors located in accessible routes.

G. Maintenance Data: For each type of door hardware to include in maintenance manuals. Include final hardware and keying schedule.

H. Warranty: Special warranty specified in this Section.

1.4 QUALITY ASSURANCE

A. Installer Qualifications: Supplier of products and an employer of workers trained and approved by product manufacturers and an Architectural Hardware Consultant who is available during the course of the Work to consult with Contractor, Architect, and Owner about door hardware and keying.

1. Warehousing Facilities: In Project's vicinity.
2. Scheduling Responsibility: Preparation of door hardware and keying schedules.

B. Source Limitations: Obtain each type of door hardware from a single manufacturer.

1. Provide electrified door hardware from same manufacturer as mechanical door hardware, unless otherwise indicated. Manufacturers that perform electrical modifications and that are listed by a testing and inspecting agency acceptable to authorities having jurisdiction are acceptable.

1.5 DELIVERY, STORAGE, AND HANDLING

A. Inventory door hardware on receipt and provide secure lock-up for door hardware delivered to Project site.

B. Tag each item or package separately with identification coordinated with the final door hardware schedule, and include installation instructions, templates, and necessary fasteners with each item or package.

C. Deliver keys to manufacturer of key control system for subsequent delivery to Owner.

D. Deliver keys and permanent cores to Owner by messenger, registered mail or overnight package service.

1.6 COORDINATION

A. Installation Templates: Distribute for doors, frames, and other work specified to be factory prepared. Check Shop Drawings of other work to confirm that adequate provisions are made for locating and installing door hardware to comply with indicated requirements.

B. Security: Coordinate installation of door hardware, keying, and access control with Owner's security consultant.

1.7 WARRANTY

A. Warranty shall be in accordance with Division 1.

B. Special Warranty: Manufacturer's standard form in which manufacturer agrees to repair or replace components of door hardware that fail in materials or workmanship within specified warranty period.

1. Failures include, but are not limited to, the following:

a. Structural failures including excessive deflection, cracking, or breakage.
b. Faulty operation of doors and door hardware.
c. Deterioration of metals, metal finishes, and other materials beyond normal weathering and use.

1.8 MAINTENANCE SERVICE

A. Maintenance Tools and Instructions: Furnish a complete set of specialized tools and maintenance instructions for Owner's continued adjustment, maintenance, and removal and replacement of door hardware.

B. Maintenance Service: Beginning at Substantial Completion, provide six months' full maintenance by skilled employees of door hardware Installer. Include quarterly preventive maintenance, repair or replacement of worn or defective components, lubrication, cleaning, and adjusting as required for proper door and door hardware operation. Provide parts and supplies that are the same as those used in the manufacture and installation of original products.

1.9 EXTRA MATERIALS

A. Furnish extra materials that match products installed and that are packaged with protective covering for storage and identified with labels describing contents.

1. Door Hardware: 1 of each type of hardware.

PART 2 - PRODUCTS

2.1 SCHEDULED DOOR HARDWARE

A. Provide door hardware for each door as scheduled in Part 3 "Door Hardware Schedule" Article to comply with requirements in this Section.

1. Door Hardware Sets: Provide quantity, item, size, finish or color indicated, and products equivalent in function and comparable in quality to named products.

B. Designations: Requirements for design, grade, function, finish, size, and other distinctive qualities of each type of door hardware are indicated in Part 3 "Door Hardware Schedule" Article. Products are identified by using door hardware designations, as follows:

1. Named Manufacturers' Products: Manufacturer and product designation are listed for each door hardware type required for the purpose of establishing minimum requirements. Manufacturers' names are abbreviated in Part 3 "Door Hardware Schedule" Article.
2. References to BHMA Designations: Provide products complying with these designations and requirements for description, quality, and function.

2.2 HINGES, GENERAL

A. Quantity: Provide the following, unless otherwise indicated:

1. Three Hinges: For doors with heights 61 to 90 inches.

B. Template Requirements: Except for hinges and pivots to be installed entirely (both leaves) into wood doors and frames, provide only template-produced units.

C. Hinge Base Metal: Unless otherwise indicated, provide the following:

1. Exterior Hinges: Stainless steel, with stainless-steel pin.
2. Interior Hinges: Stainless steel, with stainless-steel pin.

D. Hinge Options: Where indicated in door hardware sets or on Drawings:

1. Nonremovable Pins: Provide set screw in hinge barrel that, when tightened into a groove in hinge pin, prevents removal of pin while door is closed; for outswinging exterior doors.
2. Corners: Square.

E. Fasteners: Comply with the following:

1. Machine Screws: For metal doors and frames. Install into drilled and tapped holes.
2. Wood Screws: For wood doors and frames.
3. Threaded-to-the-Head Wood Screws: For fire-rated wood doors.
4. Screws: Phillips flat-head; machine screws (drilled and tapped holes) for metal doors and frames and wood screws for wood doors. Finish screw heads to match surface of hinges.

2.3 HINGES

A. Butts and Hinges: BHMA A156.1.

B. Template Hinge Dimensions: BHMA A156.7.

C. Manufacturers:

1. Baldwin Hardware Corporation.
2. Hager Companies.
3. Lawrence Brothers, Inc.
4. McKinney Products Company; an ASSA ABLOY Group company.
5. PBB, Inc.
6. Stanley Commercial Hardware; Div. of The Stanley Works*.

2.4 MECHANICAL LOCKS AND LATCHES

A. Lock Throw: Comply with testing requirements for length of bolts required for labeled fire doors, and as follows:
1. Mortise Locks: Minimum 3/4-inch latchbolt throw.

B. Lock Backset: 2-3/4 inches, unless otherwise indicated.

C. Lock Trim:
1. Levers: Cast
2. Escutcheons (Roses): Cast.

D. Strikes: Provide manufacturer's standard strike for each lock bolt or latchbolt complying with requirements indicated for applicable lock or latch and with strike box and curved lip extended to protect frame; finished to match lock or latch.

1. Strikes for Mortise Locks and Latches: BHMA A156.13.
2. Aluminum-Frame Strike Box: Manufacturer's special strike box fabricated for aluminum framing.

A. Lock Functions: Function numbers and descriptions indicated in door hardware sets comply with the following:

1. Mortise Locks: BHMA A156.13.

B. Mortise Locks: Stamped steel case with steel or brass parts; BHMA A156.13, Grade 1; Series 1000.

1. Manufacturers:

a. Corbin Russwin Architectural Hardware; an ASSA ABLOY Group company *.
b. Medeco Security Locks, Inc.; an ASSA ABLOY Group company.
c. SARGENT Manufacturing Company; an ASSA ABLOY Group company.
d. Schlage Commercial Lock Division; an Ingersoll-Rand Company.
e. Yale Commercial Locks and Hardware; an ASSA ABLOY Group company.

2.5 LOCK CYLINDERS

A. High-Security Lock Cylinders: BHMA A156.30; Grade 1

B. Cylinders: Manufacturer's standard tumbler type, constructed from brass or bronze, stainless steel, or nickel silver, and complying with the following:

1. Number of Pins: Six.
2. Mortise Type: Threaded cylinders with rings and straight- or clover-type cam.
3. Rim Type: Cylinders with back plate, flat-type vertical or horizontal tailpiece, and raised trim ring.

C. Permanent Cores: Manufacturer's standard; finish face to match lockset; complying with the following:

1. Removable Cores: Core insert, removable by use of a special key; for use only with core manufacturer's cylinder.

D. Construction Keying: Comply with the following:

1. Construction Cores: Provide construction cores that are replaceable by permanent cores. Provide 10 construction master keys.

a. Replace construction cores with permanent cores as indicated in keying schedule.

2.6 KEYING

A. Keying System: Factory registered, complying with guidelines in BHMA A156.28, Appendix A. Incorporate decisions made in keying conference, and as follows:

1. Master Key System: Cylinders are operated by a change key and a master key.
2. Grand Master Key System: Cylinders are operated by a change key, a master key, and a grand master key.
3. Existing System: Master key or grand master key locks to Owner's existing system.
4.

B. Keys: Nickel silver.

1. Stamping: Permanently inscribe each key with a visual key control number and include the following notation:

a. Notation: "DO NOT DUPLICATE."

2. Quantity: In addition to one extra key blank for each lock, provide the following:

a. Cylinder Change Keys: Three.
b. Master Keys: Five.
c. Grand Master Keys: Five.

2.7 OPERATING TRIM

A. Operating Trim: BHMA A156.6; aluminum, unless otherwise indicated.
1. Basis-of-Design Product: Subject to compliance with requirements, provide product indicated on Drawings or comparable product by one of the following:

a. Burns Manufacturing Incorporated.
b. Don-Jo Mfg., Inc.
c. Forms + Surfaces.
d. Hager Companies.
e. Hiawatha, Inc.
f. IVES Hardware; an Ingersoll-Rand company.
g. Rockwood Manufacturing Company.
h. Trimco.

2.8 ACCESSORIES FOR PAIRS OF DOORS

A. Astragals: BHMA A156.22.

2.9 SURFACE CLOSERS

A. Size of Units: Unless otherwise indicated, comply with manufacturer's written recommendations for size of door closers depending on size of door, exposure to weather, and anticipated frequency of use. Provide factory-sized closers, adjustable to meet field conditions and requirements for opening force.

B. Surface Closers: BHMA A156.4, Grade 1. Provide type of arm required for closer to be located on non-public side of door, unless otherwise indicated.

1. Manufacturers:

a. DORMA Architectural Hardware; Member of The DORMA Group North America.
b. LCN Closers; an Ingersoll-Rand Company*.
c. Norton Door Controls; an ASSA ABLOY Group company.
d. SARGENT Manufacturing Company; an ASSA ABLOY Group company.

2.10 DOOR GASKETING

A. Standard: BHMA A156.22.

B. General: Provide continuous weather-strip gasketing on exterior. Provide noncorrosive fasteners for exterior applications and elsewhere as indicated.

1. Perimeter Gasketing: Apply to head and jamb, forming seal between door and frame.
2. Door Bottoms: Apply to bottom of door, forming seal with threshold when door is closed.

C. Manufacturers:

1. National Guard Products.
2. Pemko Manufacturing Co.
3. Reese Enterprises.
4. Zero International.

2.11 THRESHOLDS

A. Standard: BHMA A156.21.

B. Accessibility Requirements: Where thresholds are indicated to comply with accessibility requirements, comply with the U.S. Architectural & Transportation Barriers Compliance Board's "Americans with Disabilities Act (ADA), Accessibility Guidelines for Buildings and Facilities (ADAAG)."

1. Bevel raised thresholds with a slope of not more than 1:2. Provide thresholds not more than 1/2 inch high.

C. Manufacturers:

1. National Guard Products (NGP).
2. Pemko Manufacturing Co. (PEM).
3. Reese Enterprises (RE).
4. Zero International (ZRO).

2.12 TOUCH BAR (PANIC BAR)

A. Manufacturer

1. Touch bar shall be a series 2100 reversible as manufactured by Precision Hardware, Inc.

B. Description

1. Touch bar shall be designed for all types of single and double doors with a mullion. Available for 1-3/4" to 2-1/4" thick, up to 4'-0" wide opening.

2. Touch bar shall covers shall comply with ANSI A115.2 (Type 161), A115.18 cylinder lock and A115.1 (Type 86) Mortise Lock preparation.

3. Touch bar shall have Double Cylinder - Handed, "10" Function available.

4. Touch bar shall be available with the following base materials

a. The Cover, Touchbar, Device Channel, Lock/Hinge Side Filler and End Cap shall be furnished of heavy wrought Brass, Bronze or Stainless Steel. US28 Devices are furnished with Aluminum, Brass, Bronze and Stainless Steel components.

5. Touch bar Chassis shall be of Investment Cast Steel, Zinc Dichromated. Latchbolt.

6. Touch bar latchbolt shall be Stainless Steel, Deadlocking, 3/4" throw.

7. Touch bar strikes shall be No. S300, Investment Cast Stainless Steel, Black Powder Coated furnished standard.

8. Touch bar dogging shall be 1/4 turn hex key dogging standard.

9. Touch bar height shall be 39-15/16" from floor standard. May be varied as situation dictates.

10. Touch bar shall be reversible for all functions and Trims.

11. Touch bar shall be U.L. LISTED for Panic and Fire Exit Hardware.

12. Touch bar shall be shall be BHMA certified for ANSI 156.3, Grade 1.

13. Touch bar shall be available in finishes US3, US4, US10, US10B, US26, US26D, US28, US32D.

2.13 FABRICATION

A. Manufacturer's Nameplate: Do not provide products that have manufacturer's name or trade name displayed in a visible location except in conjunction with required fire-rated labels and as otherwise approved by Architect.

1. Manufacturer's identification is permitted on rim of lock cylinders only.

B. Base Metals: Produce door hardware units of base metal indicated, fabricated by forming method indicated, using manufacturer's standard metal alloy, composition, temper, and hardness. Furnish metals of a quality equal to or greater than that of specified door hardware units and BHMA A156.18.

C. Fasteners: Provide door hardware manufactured to comply with published templates prepared for machine, wood, and sheet metal screws. Provide screws that comply with commercially recognized industry standards for application intended, except aluminum fasteners are not permitted. Provide Phillips flat-head screws with finished heads to match surface of door hardware, unless otherwise indicated.

1. Concealed Fasteners: For door hardware units that are exposed when door is closed, except for units already specified with concealed fasteners. Do not use through bolts for installation where bolt head or nut on opposite face is exposed unless it is the only means of securely attaching the door hardware. Where through bolts are used on hollow door and frame construction, provide sleeves for each through bolt.

2. Spacers or Sex Bolts: For through bolting of hollow-metal doors.

3. Gasketing Fasteners: Provide noncorrosive fasteners for exterior applications and elsewhere as indicated.

2.14 FINISHES

A. Provide finishes complying with BHMA A156.18 as indicated in door hardware schedule.

B. Protect mechanical finishes on exposed surfaces from damage by applying a strippable, temporary protective covering before shipping.

C. Appearance of Finished Work: Variations in appearance of abutting or adjacent pieces are acceptable if they are within one-half of the range of approved Samples. Noticeable variations in the same piece are not acceptable. Variations in appearance of other components are acceptable if they are within the range of approved Samples and are assembled or installed to minimize contrast.

PART 3 - EXECUTION

3.1 EXAMINATION

A. Examine doors and frames, with Installer present, for compliance with requirements for installation tolerances, labeled fire-rated door assembly construction, wall and floor construction, and other conditions affecting performance.

B. Examine roughing-in for electrical power systems to verify actual locations of wiring connections before electrified door hardware installation.

C. Proceed with installation only after unsatisfactory conditions have been corrected.

3.2 PREPARATION

A. Steel Doors and Frames: For surface applied door hardware, drill and tap doors and frames according to ANSI/SDI A250.6.

B. Wood Doors: Comply with DHI WDHS.5 "Recommended Hardware Reinforcement Locations for Mineral Core Wood Flush Doors."

3.3 INSTALLATION

A. Mounting Heights: Mount door hardware units at heights unless otherwise indicated or required to comply with governing regulations.

1. Standard Steel Doors and Frames: ANSI/SDI A250.8.

B. Install each door hardware item to comply with manufacturer's written instructions. Where cutting and fitting are required to install door hardware onto or into surfaces that are later to be painted or finished in another way, coordinate removal, storage, and reinstallation of surface

protective trim units with finishing work specified in Division 09 Sections. Do not install surface-mounted items until finishes have been completed on substrates involved.

1. Set units level, plumb, and true to line and location. Adjust and reinforce attachment substrates as necessary for proper installation and operation.
2. Drill and countersink units that are not factory prepared for anchorage fasteners. Space fasteners and anchors according to industry standards.

C. Hinges: Install types and in quantities indicated in door hardware schedule but not fewer than the number recommended by manufacturer for application indicated or one hinge for every 30 inches of door height, whichever is more stringent, unless other equivalent means of support for door, such as spring hinges or pivots, are provided.

D. Lock Cylinders: Install construction cores to secure building and areas during construction period.

1. Replace construction cores with permanent cores as indicated.

E. Key Control System: Tag keys and place them on markers and hooks and return to owner, as determined by final keying schedule.

F. Thresholds: Set thresholds for exterior man doors, as indicated on plans.

G. Stops: Provide floor stops for doors unless wall or other type stops are indicated in door hardware schedule. Do not mount floor stops where they will impede traffic.

H. Perimeter Gasketing: Apply to head and jamb, forming seal between door and frame.

I. Meeting Stile Gasketing: Fasten to meeting stiles, forming seal when doors are closed.

J. Door Bottoms: Apply to bottom of door, forming seal with threshold when door is closed.

3.4 ADJUSTING

A. Initial Adjustment: Adjust and check each operating item of door hardware and each door to ensure proper operation or function of every unit. Replace units that cannot be adjusted to operate as intended. Adjust door control devices to compensate for final operation of heating and ventilating equipment and to comply with referenced accessibility requirements.
1. Door Closers: Adjust sweep period to comply with accessibility requirements and requirements of authorities having jurisdiction.

3.5 CLEANING AND PROTECTION

A. Clean adjacent surfaces soiled by door hardware installation.

B. Clean operating items as necessary to restore proper function and finish.

C. Provide final protection and maintain conditions that ensure that door hardware is without damage or deterioration at time of Substantial Completion.

3.6 DEMONSTRATION

A. Engage a factory-authorized service representative to train Owner's maintenance personnel to adjust, operate, and maintain door hardware and door hardware finishes. Refer to Division 01 Section "Demonstration and Training."

3.7 DOOR HARDWARE SCHEDULE

SET #01

3	Hinges FBB191 4 1/2 X 4 1/2 NRP 626 ST			
1	Exit Device	2108 X 4908D	626W	PR
1	Rim Cylinder	12E-72 PATD	626	BE
1	Door Closer	CLD-4550 HCS MC SRI	689	SD
1	Gasketing	5050C Head & Jambs	NA	
1	Door Sweep	200 SA	NA	
1	Saddle Threshold	426	AL	NA

SET #02

3	Hinges	FBB191 4 1/2 X 4 1/2	626	ST
1	Exit Device	2114 X 4914D	626W	PR
1	Door Closer	CLD-4550 HCS MC SRI	689	SD
1	Gasketing	5050C Head & Jambs	NA	

SET #04

6	Hinges FBB191 4 1/2 X 4 1/2 NRP US26D ST			
2	Flush Bolt	3917-12	626	TR
		NOTE: Inactive leaf		
1	Dustproof Strike	3910	630	TR
		NOTE: Inactive leaf		
1	Exit Device	2808 X 4908D	626W	PR
		NOTE: Active leaf		
1	Rim Cylinder	12E-72 PATD	626	BE
2	Door Closer	CLD-4550 HCS MC SRI	689	SD
1	Astragal Set	9115 A SET		NA
1	Gasketing	5050C Head & Jambs		NA
2	Door Sweep	200 SA		NA
1	Threshold	896 S	AL	NA

END OF SECTION

SECTION 09900
COATINGS AND PAINTING

PART 1- GENERAL

1.1 SUMMARY

A. Scope

1. The contractor shall furnish all materials, labor, equipment, and incidentals required to provide a protective coating system listed herein and not otherwise excluded.

2. All areas in this project shall be considered harsh service rated.

1.2 WORK INCLUDED

A. The work includes painting and finishing of interior and exterior pipe, valves, fittings and equipment and miscellaneous metals and all other work obviously required to be painted unless otherwise specified herein or on the drawings, including all existing piping and equipment. The omission of minor items in the schedule of work shall not relieve the contractor of his obligation to include such items where they come within the general intent of the specification as stated herein.

B. The following items will not be painted:

1. Any code requiring labels, such as Underwriters' Laboratories and Factory Mutual, or any equipment identification, performance rating, name or nomenclature plates.

2. Any moving parts of operating units, mechanical and electrical parts, such as valve and damper operators, linkages, sensing devices, motor and fan shafts, unless otherwise indicated.

3. Signs and nameplates.

4. Galvanized piping, pipe supports, and appurtenances.

5. Stainless steel piping, pipe supports and appurtenances.

6. Aluminum items (Aluminum embedded items shall be coated where embedded in concrete for corrosion protection).

1.3 SUBMITTALS

A. Provide submittals in accordance with Division 1.

B. Shop Drawings

1. The Contractor shall submit complete shop drawings of all materials furnished for this project as covered by these specifications. The contractor's submittal must include a certification that the submitted material describes exactly the materials to be provided or a list of deviations from the specifications with an explanation of each deviation.

C. Samples:

1. Samples of each finish and color shall be submitted to the Architect/Engineer for approval before any work is started.

2. Such samples when approved in writing shall constitute a standard, as to color and finish only, for acceptance or rejection of the finish work.

1.4 QUALITY ASSURANCE

A. Manufacturer's Qualifications:
Manufacturers regularly engaged in the manufacture of the coatings as specified herein and who can demonstrate coatings of the specified product in actual service for a period of not less than 10 years will be considered as acceptable manufacturers.

B. Workmanship shall be performed by skilled workmen thoroughly trained in necessary crafts and completely familiar with specific requirements and methods specified herein.

C. All materials shall be produced by a single manufacturer. Total paint system shall be from one manufacturer and no cross coating allowed between primers and finish coats.

D. Component Compatibility

1. Contractor and coating manufacturer shall coordinate with pipe valves and equipment to ensure compatibility of top coats with manufacturer's primers and topcoats.

E. VOC Requirements

1. Submit manufacturer's certification that paints and coatings comply with Federal, State, and Local, whichever is more stringent, requirements for VOC (Volatile Organic Compound)

1.5 WARRANTY

A. Warranty shall be in accordance with Division 1.

1.6 DELIVERY, HANDLING AND STORAGE

A. Deliver all material to site in original, new, unopened containers, labeled and bearing manufacturer's name and stock number, product and brand name, contents by volume for major constituents, instructions for mixing and reducing, and application instruction.

B. Provide adequate storage facilities designed exclusively for the purpose of paint storage and mixing. Facility area shall be located away from open flames, be well ventilated, and be capable of maintaining ambient storage temperature of no less than 45 degrees F.

C. Paint, coatings, reducing agents, and other solvents must be stored in original containers until opened; if not resealable, then must be transferred to UL approved safety containers. Provide proper ventilation, personal protection, and fire protection for storage and use of same.

D. Comply with requirements set forth by Occupational Safety and Health Act, OSHA, for storage and use of painting materials and equipment.

1.7 EXTRA STOCK

A. Upon completion of work, provide owner with at least one gallon of each type and color of product used.

B. Containers shall be tightly sealed and clearly labeled for identification.

1.8 References

A. A. SSPC: Steel Structures Painting Council

PART 2- PRODUCTS

2.1 ACCEPTABLE SYSTEMS AND MANUFACTURERS

A. General: Paint products/systems specified are not intended to limit competition, but to establish a standard of quality desired. The owner will consider equivalent systems by other manufacturers.

2.2 MATERIALS

A. All materials specified herein are manufactured by Sherwin Williams Company or Tnemec Company, Inc., North Kansas City, Missouri.

B. Equivalent materials of other manufacturers may be substituted on approval of the Owner's Representative. Request for substitution shall include manufacturer's literature for each product giving name, generic type, descriptive information, performance and test data, and evidence of satisfactory past performance. No request for substitution shall be considered that would decrease film thickness and/or number of coats or offer a change in the generic type of coating specified.

2.3 COATING SCHEDULE for STEEL and DUCTILE IRON SURFACES

A. Interior and Exterior Service

1. Surface Preparation:

a. Remove all oil and grease from surface by solvent cleaning per SSPC-SP-1.

b. Hand tool clean per SSPC-SP-2 or power tool clean per SP-3 where shop prime coat has been damaged.

2. Primer: B50WZ0001 - Kem Kromik Universal Metal Primer, dry film thickness - 3-4 mils. For touch up of shop primed surfaces or priming of bare surfaces.

3. Second Coat: Macropoxy 646 or 646PW (for potable water) Fast Cure epoxy dry film thickness – 4-6 mils

4. Third Coat: Macropoxy 646 or 646PW (for potable water) Fast Cure epoxy dry film thickness – 4-6 mils

2.4 MASONRY

A. Exterior Exposure

Surface Preparation: Surface shall be clean and dry.

1st Coat:	Series 157-Color Enviro-Crete	(100 Sq. Ft. per gallon)
2nd Coat:	Series 157-Color Enviro-Crete	(8.0 dry mils/coat)

NOTE: First coat of Tneme-Crete will act as a filler coat while the second coat will completely seal and finish. Provides long-term life and high performance. Available in Series 156 W.B. Tneme-Crete for a smooth finish.

B. Interior Exposure (Non-immersion) (WBPS Block Walls)

Surface Preparation: Surface shall be clean and dry.

1st Coat:	Series 130 Envirofill (Fill all voids)	60-80 Sq. Ft./Gal. (15.0 dry mils)
2nd Coat:	Series N69-Color Hi-Build Epoxoline	175 Sq. Ft./Gal. (5.0 dry mils)
3rd Coat:	Series N69-Color Hi-Build Epoxoline	175 Sq. Ft./Gal. (5.0 dry mils)

NOTE: Block filler is a modified epoxy designed for high moisture areas.

2.5 CONCRETE (WWPS Pre-Cast Concrete Building, Walls and Ceiling)

A. Interior Exposure (Non-immersion)

Surface Preparation: Surface shall be clean and dry.

1st Coat:	Series N69-Color Hi-Build Epoxoline	180 Sq. Ft./Gal. (6.0 dry mils)
2nd Coat:	Series N69-Color Hi-Build Epoxoline	180 Sq. Ft./Gal. (6.0 dry mils)

NOTE: This system utilizes the versatility of Series N69 and will provide protection from abrasion, moisture, corrosive fumes, and chemical contact.

2.6 WOOD (WBPS Ceiling and Trim)

A. Exterior/Interior Exposure

		Dry Film-Mils
Surface Preparation:	Surface shall be clean and dry.	
1st Coat:	Series 10-99W Primer	2.0- 3.0
2nd Coat:	Series N69-Color Hi-Build Epoxoline	175 Sq. Ft./Gal. (5.0 dry mils)
3rd Coat:	Series N69-Color Hi-Build Epoxoline	175 Sq. Ft./Gal. (5.0 dry mils)

NOTE: Specify Series 1029 Enduratone for semi-gloss finish.

PART 3- EXECUTION

3.1 INSPECTION

A. Thoroughly examine surface scheduled to be painted prior to commencing work. Report in writing to the Owner's Representative any condition that may affect proper application and overall performance of coating system. Do not proceed with work until such conditions have been corrected. Commencing with work indicates acceptance of existing conditions and for responsibility for performance of applied coating.

3.2 PROTECTION

A. Extreme diligence shall be taken to ensure that vehicles, equipment, hardware, fixtures, materials, etc., are protected against paint spillage, overspray, etc. Such damages shall be corrected at no expense to Owner.

B. Surfaces not to be coated shall be masked, removed, or otherwise covered to protect against cleaning and coating application procedures and weather. Drop cloths shall be used to protect floor, walls, machinery, equipment, and previously coated surfaces.

C. Exercise care in erecting, bracing, handling, and dismantling staging and scaffolding, to avoid scratching or damaging walls, floors, equipment, etc.

3.3 SURFACE PREPARATION

A. Perform preparation and cleaning procedures in strict accordance with manufacturer's instructions for each substrate condition.

3.4 TOUCH UP OF SHOP APPLIED COATINGS

A. All shop applied coatings with manufacturer's standard paint and in non-immersion service, shall be touched up with manufacturer's coating.

3.5 APPLICATION

A. No paint shall be applied when surrounding air temperature, as measured in the shade, is below 45 degrees F. No paint shall be applied when the temperature of the surface to be painted is below 40 degrees F. Paint shall not be applied to wet or damp surfaces, and shall not be applied in rain, snow, fog or mist, or when the relative humidity exceeds 85%. Paint shall not be applied when the substrate temperature is within 5 degrees of the dew point. Paint manufacturer's temperature guidelines must be followed.

B. No paint shall be applied when it is expected that the relative humidity will exceed 85% or that the air temperature will drop below 45 degrees F within 4 hours after the application of the paint.

C. Maintain proper ventilation in area of work to alleviate volatile solvents evaporating from coating materials.

D. All ingredients in any container of the coating materials shall be thoroughly mixed and shall be agitated often enough during application to keep the pigment suspended.

E. Should thinning be required use only the amounts specified by the coating manufacturer.

F. Application of coating shall be by brush, roller, mitt, or spray and in accordance with manufacturer's recommendations. All material shall be evenly applied to form a smooth, continuous, unbroken coating. Drips, runs, sags, or pinholes shall not be acceptable.

G. Provide proper application equipment, including ladders, scaffolding, masking materials, and tools to perform work. Ladders and scaffolding shall meet or exceed UL requirements and Metal Ladder Manufacturer's Association.

H. Second coat shall be tinted slightly to differentiate between the second coat and third (final) coat.

I. Meet all requirements set forth by Occupational Safety and Health Act, OSHA, for confined space.

3.6 SYSTEM INSPECTION AND TESTING

A. After application of each coating in the specified system and its surface has cured, measure its thickness with a properly calibrated Nordson Microtest Dry Film Thickness Gauge, or equivalent. Follow standard method for measurement of dry paint thickness with magnetic gauges as outlined in Steel Structures Painting Council's SSPC PA2.

B. Make as many determinations as needed to ensure the specified thickness values in each typical area. To all surfaces having less dry film thickness than specified, apply additional coat(s) at no extra cost to Owner to bring thickness up to specifications.

C. Structural metals in immersion service that receive a protective coating system shall be checked with a non-destructive holiday detector that shall not exceed 67 1/2 volts. All

pinholes or defects shall be repaired in accordance with manufacturer's printed recommendations and then retested.

D. Painting contractor shall permit Owner's Representative and/or paint & coating manufacturer (as requested by owner) to inspect his work for conformance to this specification. Owner reserves the right to reject all work that does not comply with this specification.

3.7 CLEAN UP

A. Upon completion, painting contractor shall clean up and remove from site all surplus materials, tools, appliances, empty cans, cartons, and rubbish resulting from painting work. Site shall be left in neat, orderly condition.

B. Remove all protective drop cloths and masking from surfaces not being painted. Provide touch up around same areas as directed by Owner's Representative.

C. Remove all misplaced paint splatters or drippings resulting from this work.

END OF SECTION

SECTION 09910
CONCRETE EPOXY COATINGS

PART 1 - GENERAL

1.1 SUMMARY

A. This specification covers all labor, materials, equipment, and services necessary to complete the installation of corrosion protection for the inside of the Precast Concrete Wetwell at the wastewater pump station. All inside concrete surfaces in the Precast Concrete Wetwell shall be coated.

1.2 REFERENCES

A. ACI – The published standards of the American Concrete Institute, Farmington Hills, MI.
   1. ACI 506.2-77 - Specifications for Materials, Proportioning, and Application of Shotcrete.

B. ASCE – The published Manuals and Reports on Engineering Practices of the American Society of Civil Engineers, Reston, VA.
   1. ASCE Manual No. 92 – Manuals and Reports on Engineering Practice; Manhole Inspection and Rehabilitation (2008 Update).

C. ASTM - The published standards of the American Society for Testing and Materials, West Conshohocken, PA.
   1. ASTM D638 - Tensile Properties of Plastics.
   2. ASTM D790 - Flexural Properties of Unreinforced and Reinforced Plastics.
   3. ASTM D695 - Compressive Properties of Rigid Plastics.
   4. ASTM D4541 - Pull-off Strength of Coatings Using a Portable Adhesion Tester.
   5. ASTM D7234 - Pull-Off Adhesion Strength of Coatings on Concrete Using Portable Pull-Off Adhesion Testers.
   6. ASTM D4787 Standard Practice for Continuity Verification of Liquid or Sheet Linings Applied to Concrete Substrates.
   7. ASTM D2584 - Volatile Matter Content.
   8. ASTM D543 - Resistance of Plastics to Chemical Reagents.
   9. ASTM D4258 - Standard Practice for Surface Cleaning Concrete
   10. ASTM D4259 - Standard Practice for Abrading Concrete
   11. ASTM C109 - Compressive Strength Hydraulic Cement Mortars.
   12. ASTM C579 - Compressive Strength of Chemically Setting Silicate and Silica Chemical Resistant Mortars.

D. ICRI – The published standards of the International Concrete Repair Institute, Des Plaines, IL.
   1. ICRI Technical Guideline No. 03732 - Selecting and Specifying Concrete Surface Preparation for Sealers, Coatings, and Polymer Overlays.

E. Los Angeles County Sanitation District – Evaluation of Protective Coatings for Concrete (otherwise known as the "Redner Test").

F. NACE - The published standards of National Association of Corrosion Engineers (NACE International), Houston, TX.

1. NACE RPO 188-99 Discontinuity (Holiday) Testing of New Protective Coatings on Conductive Substrates

G. SSPC - The published standards of the Society of Protective Coatings, Pittsburgh, PA.
1. SSPC-SP 1 – Solvent Cleaning
2. SSPC-SP 5 - White Metal Blast Cleaning
3. SSPC-SP 10 - Near White Metal Blast Cleaning
4. SSPC-SP 12 Surface Preparation and Cleaning of Metals by Water jetting prior to Recoating.
5. SSPC SP-13/NACE No. 6 – Surface Preparation of Concrete.
6. SSPC-PA 9 - Measurement of Dry Coating Thickness on Cementitious Substrates Using Ultrasonic Gages.

H. SSPWC - Standard Specifications for Public Works Construction "Greenbook", 2009.
1. SSPWC 210-2.3.3 & 211-2 - Chemical Resistance Test (Pickle Jar Test).
2. SSPWC 500-2 – Manhole and Structure Rehabilitation.

1.3 SUBMITTALS

A. Provide submittals in accordance with section 01330 "Submittals".

B. Product Data:
1. Technical data sheet for each repair and coating product to be used; including application, cure time, surface preparation procedures, and certification from coating product manufacturer as to the compatibility of the repair material(s) and coating system.
2. Material Safety Data Sheet (MSDS) for each product to be used.
3. Copies of independent testing performed on the coating product indicating the product meets the requirements as specified herein. Coating product physical properties shall be substantiated through submittal of testing results as documented by an accredited third party laboratory and shall be representative of the actual field applied product including cure mechanism(s) as to be employed in the field.
4. Five (5) references of manufacturer indicating successful coating system performance greater than five (5) years in age of the submitted coating product(s) within the municipal water environment.

C. Contractor Data:
1. Current documentation from repair and coating product manufacturer(s) certifying Contractor's training and equipment complies with the Quality Assurance requirements specified herein (Section 1.4).
2. Five (5) references of Contractor indicating successful coating system installation performance greater than five years in age of coating product(s) of the same material type as specified herein, applied by spray application within the municipal water environment.
3. Documentation of requirements of Section 1.6 B & C.

1.4 QUALITY ASSURANCE

A. Coating and repair product(s) shall be capable of being installed and curing properly within the specified environment(s); specifically within environmental conditions of a

typical concrete neutralizing tank. Coating product(s) shall be resistant to all forms of chemical or bacteriological attack found in municipal water treatment systems.

B. Coating and Repair product(s) shall be fully compatible; including ability to bond effectively (as tested for in Section 3.5 C.) to each other and/or the host substrate, forming a composite system.

C. Contractor shall utilize equipment for the application of the coating and repair product(s) which has been approved by the product manufacturer; and Contractor shall have received training on the operation and maintenance of said equipment from the product manufacturer. Written certification of such approval(s) and training shall be submitted by the coating and repair product manufacturer(s).

D. Contractor and contractor personnel shall be certified by, or have their training approved and certified by, the coating and repair product(s) manufacturer(s) for the handling, mixing, application and inspection of the product(s) to be used as specified herein. Written certification of such training shall be submitted by the coating and repair product manufacturer(s) and shall include the individual contractor personnel to be employed on the project.

E. Inspectors shall be trained in the use of testing or inspection instrumentation and knowledgeable of the proper use, preparation and installation of the product(s) to be used as specified herein.

F. Contractor shall initiate and enforce quality control procedures consistent with the coating product(s) manufacturer recommendations and applicable NACE, SSPC, ICRI or other standards as referenced herein.

G. Pre-construction meeting shall take place as indicated in the contract documents. All parties to have physical presence on the project during construction shall be present. At this meeting responsibilities and authorities during construction shall be discerned; comments and questions regarding materials and execution of these specifications shall be presented and addressed.

1.5 DELIVERY, STORAGE, AND HANDLING

A. Materials are to be kept dry, protected from weather, and stored under cover.

B. Coating and repair materials are to be stored between 50 deg F and 90 deg F. Do not store near flame, heat, or strong oxidants.

C. All materials are to be handled according to their material safety data sheets.

1.6 SITE CONDITIONS

A. Contractor shall conform to all local, state, and federal regulations including those set forth by OSHA, RCRA and the EPA and any other applicable authorities.

B. Confined space entry program and other required safety training certifications shall be submitted by Contractor to Owner as necessary to perform the specified work.

C. Flow diversion and/or bypass plans shall be submitted by Contractor to Owner as necessary to perform the specified work.

1.7 WARRANTY

A. Contractor shall warrant all work against defects in materials and workmanship for a period of one (1) year, unless otherwise noted, from the date of final acceptance of the project. Contractor shall, within a reasonable time after receipt of written notice thereof, repair defects in materials or workmanship which may develop during said one (1) year period, and any damage to other work caused by such defects or the repairing of same, at his own expense and without cost to the Owner.

B. Coating and repair product supplier(s) shall warrant all coating materials for a period of one (1) year from the date of final acceptance, unless otherwise noted, to be free of manufacturing defects; and products will meet current published physical properties when applied and tested in accordance with the manufacturer's standards. If, within said one (1) year period, any product does not meet the physical properties or is defective in manufacture the manufacturer will either replace the defective product or refund the purchase price.

PART 2 - PRODUCTS

2.1 EXISTING PRODUCTS

A. Standard Portland cement or new concrete must cured a minimum of 28 days prior to application of the coating product(s) or surfaces must be prepared and coating materials applied according to the coating product manufacturer's recommendations for such conditions.

B. Existing coatings shall be removed which may affect the performance and adhesion of the specified coating product(s). Contractor is to maintain strict adherence to the protective coatings manufacturer's recommendations with regard to proper surface preparation and compatibility with existing coatings.

C. Thoroughly clean and prepare existing products/surfaces to effect a seal with and promote the adhesion of the coating product(s).

2.2 REPAIR PRODUCTS

A. Repair products shall be used to fill voids or bugholes, smooth transitions between components, replace lost mortar in masonry structures, smooth rough surfaces, and rebuild severely deteriorated substrates and/or to remediate infiltration prior to the installation of the coating product(s).

1. Repair materials must be supplied by the coating product(s) manufacturer or shall be expressly approved by the coating product(s) manufacturer in writing for compatible with the specified coating product(s).

2. All materials shall be mixed, applied, and cured in accordance with the manufacturer's recommendations.
3. Repair product physical properties shall be substantiated through submittal of accredited third party testing results and shall be representative of the actual field applied product and cure mechanism(s) to be employed in the field.

B. 100% solids, solvent-free epoxy grout; specifically the specified coating product(s) (Section 2.3 C.) enhanced with Raven 200 polyolefin fiber filler or other approved aggregate.

C. Factory blended, rapid setting, high-early strength, non-shrink, calcium aluminate repair mortar to be trowel or pneumatically spray applied to the entire surface.
1. Manufacturer: Raven Lining Systems, Broken Arrow, Oklahoma 800-324-2810 or 918-6150-140 fax.
2. Product: Raven 705CA Cement Mortar having the following characteristics:
   a. Product Type: Calcium aluminate mortar
   b. Tensile Strength, psi (ASTM C496):>600
   c. Compressive Strength, psi (ASTM C109): >8,000 @ 28 days
   d. Flexural Strength, psi (ASTM C293): >900
   e. Shrinkage @ 90% R. H., % (ASTM C596): 0
   f. Adhesion to Concrete, psi (ASTM C882): >2000 psi
   g. Adhesion to Concrete, psi (ASTM D7234): >150 psi
   h. Freeze/Thaw (ASTM C666): 100 Cycles, no visible damage
   i. Density of wet mix: 129 – 139 lbs./ft^3.
   j. Applied Density: 135 lbs/ft^3 (+/- 5 lbs).

D. Factory blended, high strength, non-shrink, cementitious repair mortar to be troweled or otherwise manually applied to repair/fill minor surface defects from featheredge to ¼" in thickness.
1. Manufacturer: Raven Lining Systems
2. Product: Raven 710 – Cement Mortar having the following characteristics:
   a. Product Type: Calcium aluminate mortar
   b. Compressive Strength, psi (ASTM C109): >5,000 @ 28 days
   c/ Shrinkage @ 90% R. H., % (ASTM C596): 0
   d. Adhesion to Concrete, psi (ASTM C882): >1600 psi
   e. Adhesion to Concrete, psi (ASTM D7234): >150 psi

E. Factory blended, high-early strength, non-shrink, cementitious repair mortar to be trowel applied to fill large voids or repair bench and inverts.
1. Manufacturer: Raven Lining Systems
2. Product: Raven 700 Cement Mortar having the following characteristics:
   a. Product Type: Calcium aluminate mortar
   b/ Compressive Strength, psi (ASTM C109): >1,800 @ 24 hours
   c. Adhesion to Concrete, psi (ASTM C882): >1600 psi
   d. Adhesion to Concrete, psi (ASTM D7234): >150 psi
   e. Density of wet mix: 100 – 110 lbs./ft^3.

F. Factory blended, non-shrink, hydraulic cement to be used for infiltration remediation.
1. Manufacturer: As applicable
2. Product: Hydraulic cement having the following characteristics:
   a. Product Type: Hydraulic cement

b. Compressive Strength, psi (ASTM C109): >1,000 @ 1 hour, >2500 psi @ 24 hours
c. Shrinkage @ 90% R. H., % (ASTM C596): 0

G. Hydrophobic or Hydrophilic injectable urethane chemical grout to be used for the remediation of high volume infiltration or crack repair and/or soil stabilization and void filling.
1. Manufacturer: As applicable
2. Product: Urethane chemical grout as appropriate for infiltration, crack repair and soil stabilization.

2.3 COATING PRODUCTS

A. Coating product shall be applied to all interior surfaces to protect the host substrate and repair materials from all forms of chemical or bacteriological attack typically found in municipal water treatment systems and to impart a degree of structural enhancement.

B. Coating product physical properties shall be substantiated through submittal of accredited third party testing results and shall be representative of the actual field applied product and cure mechanism(s) to be employed in the field.

C. 100% Solids, Solvent-Free, Ultra-High Build Epoxy Coating to be spray applied to all interior surfaces of exposed concrete above the spring line or as otherwise detailed.
1. Manufacturer: Raven Lining Systems, Broken Arrow, Oklahoma 800-324-2810 or 918-6150-140 fax.
2. Product: Raven 405 – 100% solids, solvent-free ultra high-build epoxy system exhibiting the following characteristics:
a. Product Type: amine cured epoxy
b. VOC Content (ASTM D2584): 0%
c. Compressive Strength, psi (ASTM D695): 18,000 (minimum)
d. Tensile Strength, psi (ASTM D638): 7,500 (minimum)
e. Flexural Modulus, psi (ASTM D790): 700,000 (minimum)
f. Adhesion to Concrete, psi/mode of failure (ASTM D4541/7234): 200 psi (minimum) with substrate (concrete) failure
g. Chemical Resistance (ASTM D543/G20) immersion service for:
1) Municipal water treatment environment
2) Sulfuric Acid, 30%
3) Sodium Hydroxide, 10%
4) Sodium Hypochlorite, 12.5%
h. Successful Pass: Sanitation District of L.A. County Coating Evaluation Study and SSPWC 210.2.3.3 (Greenbook "Pickle Jar" Chemical Resistance test)

D. Coating product primer to be applied as recommended by the coating product manufacturer as installation conditions warrant.
1. Manufacturer: Raven Lining Systems.
2. Product: Raven 155 – Water borne epoxy primer having the following characteristics:
a. Product Type: amine cured, waterborne epoxy primer

E. 100% Solids, Solvent-Free, Ultra-High Build Epoxy Coating to be manually or spray applied to interior surfaces of exposed concrete in the wet well; specifically designed for accelerated cure and suitable for release of flow in less than 45 minutes at normal service temperatures or as otherwise detailed.

1. Manufacturer: Raven Lining Systems, Broken Arrow, Oklahoma 800-324-2810 or 918-6150-140 fax.
2. Product: Raven 405 FS – 100% solids, solvent-free ultra high-build epoxy system.

2.4 PRODUCT APPLICATION EQUIPMENT

A. Cementitious repair products for spot repair may be mixed and applied using hand and/or power tools

B. Cementitious repair products to be spray applied shall be mixed and applied using manufacturer approved batch mixing and low velocity spray devices.

C. Coating product primer may be applied using hand tools or other convention/airless spray application device(s).

C. Coating product to be spray applied shall be mixed and applied using manufacturer approved heated plural component spray equipment.

E. Coating product application to hard to reach areas or for touch-up may be performed using hand tools.

PART 3 - EXECUTION

3.1 EXAMINATION

A. Appropriate actions shall be taken by Contractor to comply with local, state, and federal regulatory and other applicable agencies with regard to environment, health, and safety during work.

B. All structures to be coated shall be readily accessible to Contractor.

C. New Portland cement concrete structures shall have endured a minimum of 28 days since manufacture prior to commencing coating installation. Should earlier coating be required, coating product manufacturer shall recommend specifications including appropriate cure assessment testing and use of specialty primers and sealers such as Raven 155.

D. Any active flows shall be dammed, plugged, or diverted as required to ensure all liquids are maintained below or away from the surfaces to be coated until final applications are cured as recommended by the manufacturer.

E. Temperature of the surface to be coated should be maintained between 40 and 120 deg F.

F. Specified surfaces should be shielded to avoid exposure of direct sunlight, other intense heat source or, where cementitious products are employed, excessive ventilation. Where varying surface temperatures do exist, coating installation should be scheduled when the temperature is falling versus rising.

G. Prior to commencing surface preparation, Contractor shall inspect all surfaces specified to receive the coating and notify Owner, in writing, of any noticeable disparity in the site, structure or surfaces which may interfere with the work, use of materials or procedures as specified herein.

3.2 REPAIRS AND SURFACE PREPARATION

A. Excessive debris, sediment, root intrusion or other foreign materials which may impact the effectiveness of the surface preparation process shall be removed prior to the commencement thereof.

B. Offset structural components, lids, covers, frames, etc. shall be repaired, replaced, or reset prior to the commencement of surface preparation.

C. External soil/fill voids shall be remediated and/or stabilized by replacement or injection of stabilizing grout as determined appropriate by the engineer.

D. Oils, grease, incompatible existing coatings, waxes, form release, curing compounds, efflorescence, sealers, salts, or other contaminants which may affect the performance and adhesion of the coating to the substrate shall be removed in accordance with SSPC-SP 1 – Solvent Cleaning.

E. Choice of surface preparation method(s) should be based upon the condition of the structure and concrete or masonry surface, potential contaminants present, access to perform work, and the required cleanliness and profile of the prepared surface to receive the repair and/or coating product(s).

F. Surface preparation method, or combination of methods, that may be used include high-pressure water cleaning, water jetting, abrasive blasting, shotblasting, grinding, scarifying, detergent water cleaning, hot water cleaning and others as referenced in industry accepted standards such as:
   1. SSPC SP-13/NACE No. 6 Surface Preparation of Concrete,
   2. ASTM D-4258 Standard Practice for Surface Cleaning Concrete for Coating and ASTM-D-4259 Standard Practice for Abrading Concrete,
   3. ICRI Technical Guideline No. 03732 Selecting and Specifying Concrete Surface Preparation for Sealers, Coatings, and Polymer Overlays.
   4. NACE/SSPC Standards for the surface preparation of steel.

G. Whichever method(s) are used, they shall be performed in a manner that provides a uniform, sound, clean, and neutralized surface suitable for the specified coating product(s).
   1. Resulting surface profile of the prepared concrete substrate shall be (as described in ICRI Technical Guideline No. 03732):
      a. For application of cementitious materials; at least a CSP2
      b. For application of coating products: at least a CSP4.

2. Concrete and/or mortar damaged by corrosion, chemical attack or other means of degradation shall be removed so that sound substrate remains,
   a. In conditions where severe chemical/microbiological attack has occurred the prepared substrate shall exhibit a pH of 8-12. Additional cleaning and/or contaminated substrate removal may be required to achieve the specified pH level.
3. Steel surfaces to be coated shall be abrasive blast cleaned.
   a. Blast air shall be free of oil and water.
   b. Abrasive shall be as required to produce the specified level of cleanliness and profile in an efficient and uniform manner. Abrasive shall not be recycled.
   c. Abrasive blasting shall not be performed when the air or steel temperature is below 40 deg F, when the relative humidity exceeds 80%, or when the steel is less than 5 deg F warmer than the dew point. The Contractor will provide dehumidification, and/or temperature control as necessary to meet these conditions.
   d. Blast cleaning shall be in accordance with SSPC-SP 5, White Metal Blast Cleaning for immersion service of the coated areas. Blast cleaning for other surfaces shall be in accordance with SSPC-SP 10, Near White Blast Cleaning. Anchor profile shall be 2.5-5.0 mils and relative to the coating thickness specified.
   e. Alternatively, surfaces to be recoated may be cleaned according to SSPC-SP 12/NACE No. 5 Surface Preparation and Cleaning of Metals by Water jetting prior to Recoating.
      1) Preparation shall be to SSPC-SP 12, WJ-1, Clean to Bare Substrate using a minimum of High-Pressure Water Jetting (10,000 psi-30,000 psi).
      2) Water jetting does not produce an etch or profile of the magnitude currently recognized by the coatings industry. Rather, it exposes the original abrasive-blasted surface profile if one exists. An anchor profile of at least 2.5 mils is required to be exposed. If sufficient profile does not exist, abrasive blasting shall be performed as specified in section 3.2 D.
      3) At the time of the recoating, the amount of flash rust shall be no greater than "No Flash Rust" as defined in SSPC-SP 12.
      4) If inhibitors are to be used with the standard jetting water, the coatings manufacturer shall be consulted to ensure the compatibility of inhibitors with the coatings.

H. Prior to the application of the coating product repairs shall be completed to ensure the following:
   1. All inflow and infiltration shall be eliminated by use of appropriate repair material(s), such as hydraulic cements and/or chemical grouts as described in Section 2.2.
   2. All repairs to joints, pipe seals, steps, mechanical penetrations, benches, inverts, pipes or other appurtenances to be coated shall be completed and repaired surfaces prepared according to this section.
      a. Benches or other horizontal surfaces shall have adequate slope (1" rise per lineal foot minimum) to minimize the retention of debris following surcharge.

b/ Inverts or flow channels shall be smooth without lips, rough edges or other features which may cause debris to collect; contoured to minimize turbulent flow; and be sloped to promote adequate flow from the inlet(s) to the outlet pipe.

c. All joints, pipe seals, steps or other penetrations shall be sealed against inflow, infiltration and exfiltration and be adequately filled, smoothed and contoured to promote monolithic coating application.

I. Areas where reinforcing steel has been exposed shall be repaired in accordance with the Project Engineer's recommendations or at the minimum all exposed steel shall be prepared in accordance with Section 3.2 prior to coating with the coating product specified or other approved primer as specified by the coating product manufacturer.

3.3 APPLICATION OF REPAIR AND RESURFACING PRODUCTS

A. Repair products as per section 2.2 D shall be used to fill voids, bugholes, and other surface defects which may affect the performance or adhesion of the coating product(s).

B. Repair products as per section 2.2 C and/or D shall be used to repair, smooth or rebuild surfaces with rough profiles to provide a concrete or masonry substrate suitable for the coating product(s) to be applied. These products shall be installed to ½" minimum thickness or as recommended within manufacturers published guidelines. Should structural rebuild be necessary, these products shall be installed to a thickness as specified by the Project Engineer

C. Repair products as per section 2.2 F and/or G shall be used to remediate all active inflow, infiltration, and/or external soil/fill voids.

D. All Repair products shall be handled, mixed, installed, and cured in accordance with manufacturer guidelines.

E. All repaired or resurfaced substrates shall be inspected for cleanliness and suitability to receive the coating product(s). Additional surface preparation may be required prior to coating application as per section 3.2.

3.4 APPLICATION OF COATING PRODUCT(S)

A. Application procedures shall conform to the recommendations of the coating product(s) manufacturer, including environmental controls, product handling, mixing, application equipment, and methods.

B. Spray equipment shall be specifically designed to accurately ratio and apply the coating product(s) and shall be in proper working order.

C. Contractors qualified in accordance with Section 1.4 of these specifications shall perform all aspects of coating product(s) installation.

D. Prepared surfaces shall be coated via spray application of the coating product(s) described herein unless otherwise recommended by the coating product manufacturer.

E. Coating thickness shall be in relation to the profile of the surface to be coated as recommended by the coating product manufacturer.

F. In all cases the coating product(s) shall be applied to a minimum dry film thickness of 80 mils to surface profiles of CSP-4 to CSP-5 or 125 mils minimum DFT to surface profiles of CSP-6 or greater.
   1. For resistance to ground water head pressure the coating shall be a minimum of 80 mils for depths up to 15' and 125 mils minimum for depths from 15' to 80'. For depths greater than 80' consult the coating manufacture for recommendations.

G. Subsequent topcoating or additional coats of the coating product(s) shall occur within the product's recoat window or 24 hours whichever is less. Additional surface preparation procedures will be required if this recoat window is exceeded.

H. Coating product(s) shall interface with adjoining construction materials/components throughout the manhole structure to effectively seal and protect substrates from attack by corrosive elements and to ensure the effective elimination of infiltration into the water system.

I. Procedures and materials necessary to effect the interface between dissimilar materials and the coating product shall be as recommended by the coating product(s) manufacturer.

J. Termination points of the coating product(s) shall be made at the manhole frame and chimney joint (or other man way as is present), 1" below normal flow levels at the bench or within the invert [unless invert is specified to receive coating], and a minimum of 1" interfacing within each pipe penetration.

K. Sewage flow shall be stopped, bypassed, or diverted as necessary for application of the coating product(s) to the invert and interface with pipe materials.

3.5 TESTING AND INSPECTION

A. Coating system thickness shall be inspected to ensure compliance with the specifications herein.
   1. During application a wet film thickness gauge, meeting ASTM D4414 - Standard Practice for Measurement of Wet Film Thickness of Organic Coatings by Notched Gages, shall be used. Measurements shall be taken in the presence of the Owner's Representative, documented, and attested to by Contractor for submission to Owner.
   2. After the coating product(s) have cured in accordance with manufacturer recommendations, coating system thickness may be measured according to SSPC-PA 9 - Measurement of Dry Coating Thickness on Cementitious Substrates Using Ultrasonic Gages.

B. High voltage holiday detection for coating systems installed in corrosive environments, when it can be safely and effectively employed, shall be performed to ensure monolithic protection of the substrate. After the coating product(s) have cured in accordance with manufacturer recommendations, all surfaces shall be inspected for holidays in accordance with NACE RPO 188-99 Discontinuity (Holiday) Testing of New Protective Coatings on

Conductive Substrates or ASTM D4787 Standard Practice for Continuity Verification of Liquid or Sheet Linings Applied to Concrete Substrates. All detected holidays shall be marked and repaired according to the coating product(s) manufacturer's recommendations.

1. Test voltage shall be a minimum of 100 volts per mil of coating system thickness.
2. Detection of a known or induced holiday in the coating product shall be confirmed to ensure proper operation of the test unit.
3. All areas repaired shall be retested following cure of the repair material(s).
4. In instances where high voltage holiday detection is not feasible a close visual inspection shall be conducted and all possible holidays shall be marked and repaired as described above.
5. Documentation of areas tested, equipment employed, results, and repairs made shall be submitted to the Owner/Engineer by Contractor.

C. Adhesion of the coating system to the substrate shall be confirmed in a minimum of 10% of the manholes coated, or for large structures once every 1000 square feet of coated area. After the coating product(s) have cured in accordance with manufacturer recommendations, testing shall be conducted in accordance with ASTM D7234 Pull-Off Adhesion Strength of Coatings on Concrete Using Portable Pull-Off Adhesion Testers. Owner's representative shall select the manholes or areas to be tested.

1. For each test manhole a minimum of three 20 mm dollies shall be affixed to the coated surface; one at the cone area, one at the mid-section and one near the bottom of the structure.
2. For larger structures a minimum of three 20 mm dollies shall be affixed to the coated surface at random locations within each 1000 square foot area or as otherwise agreed upon.
3. The adhesive used to attach the dollies to the coating shall be rapid setting with tensile strengths in excess of at least twice the anticipated failure point (generally at least 1000 psi) and permitted to cure in accordance with manufacturer recommendations. The coating and dollies shall be adequately cleaned and prepared to receive the adhesive. Failure of the dolly adhesive shall be deemed a non-test and require retesting.
4. Prior to performing the pull test, the coating shall be scored to the substrate, or within 10 mils of the substrate surface, by mechanical means without disturbing the dolly or coating system bond within the test area.
5. Two of the three adhesion pulls in each test area shall exceed 200 psi and shall include substrate adhered to the back of the dolly or no visual signs of the coating product in the test hole. Pulls tests with results between 150 and 200 psi may be acceptable if more than 50 percent of the substrate in the test area is adhered to the dolly.
6. Should a structure, or area, fail to achieve two successful pulls as described above, additional testing shall be performed at the discretion of the Owner and/or Engineer. Any areas detected to have inadequate bond strength shall be evaluated by the Engineer. Further bond tests may be performed in that area to determine the extent of potentially deficient bonded area and repairs shall be made by Contractor.
7. All adhesion testing shall be performed by qualified personnel using calibrated equipment as specified by the applicable ASTM standard(s).

8. All adhesion testing shall be documented and submitted in a consistent format detailing location, test values, description of the failure point/mode, scoring method employed, adhesive used, cure time of coating and adhesive and other data as deemed necessary by the owner/engineer.
9. All adhesion test locations shall be repaired by the Contractor at no cost to the Owner.

D. Visual inspection shall be made by the Project Engineer and/or Inspector. Any deficiencies in the finished coating affecting the performance of the coating system or the operational functionality of the structure shall be marked and repaired according to the recommendations of the coating product(s) manufacturer.

E. The municipal water treatment system may be returned to full operational service as soon as the final inspection has taken place and all coating materials have been adequately cured according to the coating product(s) manufacturer's recommendations.

F. All testing shall be done in the presence of the Owner's Representative and documented by Owner's Representative and Contractor.

END OF SECTION

SECTION 11100
PROCESS PIPING

PART 1- GENERAL

1.1 SUMMARY

A. This section is intended to define the required quality standards of the materials furnished and the workmanship performed in connection with the herein specified items of piping and all the required accessories and appurtenances including, in part, all labor, tools, materials and equipment for the complete piping work for this contract which are not defined elsewhere in the Specifications or on the Drawings.

1. All pipe less than 2" shall be copper (Type K or L), PVC schedule 80, CPVC schedule 80 or 304 stainless steel schedule 40 where indicated on the drawings unless otherwise noted.

2. All pipe 3" and larger shall be DI, unless otherwise noted.

3. Piping material shall be as indicated on the pipe schedule located on the drawings if provided.

1.2 RELATED DOCUMENTS

A. Drawings and general provisions of the Contract, including General Conditions and Supplemental General Conditions and Division 1 Specifications Sections apply to this section.

1.3 SUBMITTALS

A. Submittals shall be in accordance with Division 1.

B. Manufacturer's data shall be submitted for all pipe and fittings for approval prior to purchasing. Data shall indicate compliance with specifications including thickness, materials, working pressure and joints.

C. Spool drawings and dimensioned layout drawings shall be submitted for approval for all ductile iron flanged pipe. Approval by the ENGINEER will be for general layout and not for exact dimensions. CONTRACTOR is responsible for dimensions of spool drawings.

1.4 Warranty

A. Warranty shall be in accordance with Division 1.

B. The project shall not be considered substantially complete until all testing has been completed per this section.

1.5 OPERATION AND MAINTENANCE DATA

A. Operation and Maintenance Data shall be in accordance with Division 1.

PART 2- PRODUCTS

2.1 DUCTILE IRON PIPE

A. General: Ductile iron pipe (DIP) shall be centrifugally cast in metal molds or sand-lined molds. The jointed sections of the piping shall be so placed as to allow for maintenance and to permit units and equipment connected to these systems to be removed without disturbance to the main piping systems. All ductile iron pipe and fittings shall have the weight and class clearly designated on the exterior of each length or fitting with white paint and the trade mark of the manufacturer and the year cast into or on the hub.

B. Pipe and Fittings: Ductile iron pipe and fittings shall conform to the latest revision of AWWA/ANSI C115/A21.15 for flanged pipe and AWWA/ANSI C151/A21.51 for mechanical joint pipe. All pipe and fittings shall be minimum pressure class 250 unless otherwise called for on the plans. Pipe and fittings shall be cement-lined in accordance with the latest revision of AWWA/ANSI C104/A21.4.

C. Polywrap Polyethylene Encasement shall be provided around the entire length of waterline. The encasement shall conform to the following:

1. 8 mil minimum, group 2, linear low density, flat tube, virgin polyethylene film and shall meet or exceed the requirements of AWWA C105-05, ANSI A21.5-05, ASTM D4976 and NT4112-05.
2. The film shall be marked showing trademark, year of manufacture, type of resin, specification conformance, applicable pipe sizes and a corrosion protection warning.

D. Joints:

1. All exposed fittings within buildings and structures shall be minimum pressure class 250 flanged fittings in accordance with ANSI B16.1/AWWA A21.10 and A21.11.

2. Flanges shall be furnished with factory punched full face gaskets 1/8 inch thick.

3. All underground pipe fittings shall have restrained joints. All pipe fittings, plugs, caps, tees, and bends in underground ductile iron piping must be restrained utilizing Megalug Series 1100 retainer glands by EBAA Iron Sales, Inc. or approved equal. Glands shall be manufactured of ductile iron conforming to ASTM A 536-80 Dimensions of the gland shall be such that it can be used with the standardized mechanical joint bell and tee-head bolts conforming to ANSI/AWWA A21.11 and C153/A21.53. Twist-off nuts shall be used to insure proper actuating of the restraining devices.

4. Ductile iron bell and spigot pipe joints shall be restrained using locking type gaskets unless indicated otherwise on the drawings. If all joints are not required to be restrained the minimum restrained lengths and locations will be indicated on the drawings. Gaskets shall be manufactured by the pipe manufacturer to be compatible with their pipe.

5. Where flexible restrained joint piping (river pipe) is required, the joints shall lock in place but be able to be deflected. Joint shall consist of a restraining locking ring bolted over a steel ring welded to the plain end of the pipe. Other types of restraining joints may be used with approval of the Engineer.

E. Coatings and Linings

1. Underground Pipe

a. Outside Coating - Outside coating shall be a bituminous coating per ANSI A21.51 (AWWA C151). The coating shall be applied to all pipe and fittings.

b. Inside Coating - Inside of the pipe shall be cement-mortar lined in accordance with AWWA/ANSI C104/A21.4 or latest revision thereof.

1) The cement lining shall be given a seal coat of asphaltic material which shall adhere to the mortar lining. After a 48-hour drying time, the seal coat shall have no deleterious effect upon the quality, color, taste or odor of potable water.

2. Exposed Pipe

a. Exposed pipe and fittings shall have a primer compatible with the coatings specified in Division 9. Installed pipe shall be painted in accordance with Division 9

2.2 CHLORINATED POLYVINYL CHLORIDE (CPVC) PIPE and FITTINGS

A. Pipe

1. All CPVC pipe shall be schedule 80 unless otherwise noted.

2. CPVC pipe shall be manufactured from a Type IV, Grade I Chlorinated Polyvinyl Chloride (CPVC) compound with a minimum Cell Classification of 23447 per ASTM D1784. The pipe shall be manufactured in strict compliance to ASTM F441, consistently meeting the Quality Assurance test requirements of this standard with regard to material, workmanship, burst pressure, flattening, and extrusion quality. This pipe shall carry the National Sanitation Foundation (NSF) seal of approval for potable water applications. The pipe shall have a Flame Spread rating < 25 and a Smoke Development rating < 50 when tested and listed for Surface Burning Characteristics in accordance with CAN/ULC-S102-2-M88 or equivalent.

B. Fittings

1. All CPVC fittings shall be schedule 80 unless otherwise noted.

2. All CPVC flanges shall be 150 lb and shall be attached with stainless steel bolts nuts and washers. Washers shall be installed under the bolt head and nut on all CPVC flanges.

3.

4. Materials of Construction

a.

b. Fittings are to be manufactured from CPVC material which meets or exceeds the requirements of ASTM D-1784, cell classification 23447B Type IV, Grade 1.

c. Pressure pipe used in fabrication must conform to ASTM F-441 and listed by the National Sanitation Foundation (NSF) for potable water applications.

d. Solvent Cement

1) All solvent cements used, conform to ASTM D-2564, listed by NSF for potable use applications.

2.3 POLYVINYL CHLORIDE PIPE AND FITTINGS (PVC)

A. All PVC pipe shall be schedule 80 unless otherwise noted.

B. PVC fittings shall be schedule 80 pressure fittings with socket weld or threaded ends. Socket weld cement shall be as recommended by the piping manufacturer. All solvent cements used, conform to ASTM D-2564, listed by NSF for potable use applications.

C. All PVC flanges shall be 150 lb and shall be attached with stainless steel bolts nuts and washers. Washers shall be installed under the bolt head and nut on all PVC flanges.

D. Pipe and fittings shall be listed by the National Sanitation Foundation (NSF) for potable water applications.

2.4 POLYETHYLENE (PE) PIPE

A. 3 Inches and Smaller – Pipe shall be manufactured from a PE 3408 resin listed with the Plastic Pipe Institute (PPI) as TR-4. The resin material will meet the specifications of ASTM D3350-02 with a cell classification of PE:345464C. Pipe shall have a manufacturing standard of ASTM D 3035 iron pipe size, controlled outside diameter. Pipe shall have a pressure class as specified on the plans. The pipe shall contain no recycled compounds except that generated in the manufacturer's own plant from resin of the same specification from the same raw material. All pipes shall be suitable for use as pressure conduits, and per AWWA C901, have nominal burst values of three times the Working Pressure Rating (WPR) of the pipe. Pipe shall also have the following agency listing of NSF 61.

B. 4 Inches and Larger - Pipe shall be manufactured from a PE 3408 resin listed with the Plastic Pipe Institute (PPI) as TR-4. The resin material will meet the specifications of ASTM D3350 with a cell classification of PE:345464C. Pipe shall have a manufacturing standard of ASTM F714. Pipe O.D. size shall be ductile iron pipe size (DIPS). Pipe shall be pressure class as indicated on the plans. The pipe shall contain no recycled compounds except that generated in the manufacturer's own plant from resin of the same specification from the same raw material. All pipes shall be suitable for use as pressure

conduits, listed as NSF 61, and per AWWA C906. Pipe shall have a nominal burst value of three and one-half times the Working Pressure Rating (WPR) of the pipe. Peak flow water velocity of 5 ft/sec shall be used in the hydraulics engineering design.

C. Polyethylene Pipe Fittings

1. Fittings for polyethylene pipe shall be manufactured specifically for the intended use and be approved by the piping manufacturer to be compatible with their product. All fittings shall have a working pressure rating equal to or greater than the pipe, and shall meet all requirements of NSF 61.

2. Butt Fusion Fittings

a. Fittings shall be PE3408 HDPE, Cell Classification of 345464C as determined by ASTM D3350-02, and approved for AWWA use. Butt Fusion Fittings shall have a manufacturing standard of ASTM D3261. Molded & fabricated fittings shall have a pressure rating equal to the pipe unless otherwise specified in the plans. Fabricated fittings are to be manufactured using Data Loggers. Temperature, fusion pressure and a graphic representation of the fusion cycle shall be part of the quality control records. All fittings shall be suitable for use as pressure conduits, and per AWWA C906, shall have a nominal burst values of three and one-half times the Working Pressure Rating (WPR).

3. Electrofusion Fittings

a. Fittings shall be PE3408 HDPE, Cell Classification of 345464C as determined by ASTM D3350-02. Electrofusion Fittings shall have a manufacturing standard of ASTM F1055. Fittings shall have a pressure rating equal to the pipe. All electrofusion fittings shall be suitable for use as pressure conduits, and per AWWA C906, have nominal burst values of three and one-half times the Working Pressure Rating (WPR).

b. Flanged and Mechanical Joint Adapters - Flanged and Mechanical Joint Adapters shall be PE 3408 HDPE, Cell Classification of 345464C as determined by ASTM D3350-02. Flanged and Mechanical Joint Adapters shall have a manufacturing standard of ASTM D3261.

4. Adapters

a. When changing from or to HDPE pipe adapter as manufactured by the pipe manufacturer shall be used.

2.5 STAINLESS STEEL PIPING

A. 2" and Smaller Pipe

1. All stainless steel pipe 2" and smaller shall be threaded schedule 40 type 304L or type 316L where indicated on the plans.

2. Fittings 2" and smaller shall be 150 lb threaded fittings compatible with schedule 40 threaded pipe and of the same material as the pipe.

3. Finish: Standard finish for piping and fittings shall be No.2 Mill finish or better. All pipe fittings and fabrications shall be identified and marked with type and gauge.

B. 2-1/2 and Larger Pipe

1. All stainless steel pipe shall be the schedule and material as indicated on the drawings.

2. All fittings and flanges shall be welded.

C. Flanges

1. All flanges shall be 150 lb compatible unless indicated otherwise.
2. Flanges on schedule 40 pipe shall be slip-on or weld neck flanges as indicated on the drawings. Slip on flanges shall be fully welded on the exterior and interior.
3. Flanges for schedule 10 pipe shall be Vanstone type flanges with ductile iron or stainless steel backing rings as indicated on the drawings.
4. All Flange bolts and nuts shall be stainless steel to match the material of the pipe.

D. Welding

1. All pipe welds shall be done with acceptable industry standard practices by ASME qualified welders and ASME procedures to provide full penetration. All interior and exterior surfaces shall be smooth, even and uniform.

2. Welder certification shall be submitted for approval before any pipe welding takes place.

2.6 COPPER TUBING

A. Copper tubing shall conform to ASTM B88. Copper tubing for exterior use shall be type K. For interior use, the copper tubing shall be type L.

B. Fittings: Fittings for underground service shall be flared fittings of brass for flared copper tubes and conforming to ANSI B16.26. Fittings for interior use shall be wrought copper and bronze solder-joint fittings conforming to ANSI B16.22. Solder for jointing shall be 95/5 tin/antimony or brazing alloys with melting temperatures above 1,000 degrees F. Flux shall be as specified by the solder manufacturer.

2.7 GALVANIZED STEEL PIPE AND FITTINGS

A. Pipe

1. Galvanized pipe shall be schedule 40 A53 Continuous Welded, Type F, Grade A, Black, Passivate, Bare, Pickled and Oiled, hot-dipped Galvanized, UL Listed; FM approved: NSF61 certified, Suitable for welding and/or, threading, Grooving

and Bending, produced to ASTM A53A 53M, Federal Specification WW-P404 and ASME B36.10M.

2. Tensile Requirements

a. Tensile Strength, min. 48,000 psi
b. Yield Strength, min. 30,000 psi

B. Fittings

1. All fittings shall be 150 lb malleable iron galvanized fittings.

C. Unions

1. Unions 2½ and smaller shall be galvanized 150 lb. bronze to iron seat unions.

2.8 INSTRUMENT AND CONTROL PIPING

A. General: All labor, materials, equipment, tools and services required for the furnishing and the installation of instrument and control piping required in this contract and shall be furnished and installed in compliance with the following requirements.

B. General Instrument and Control Piping

1. Piping shall be furnished and installed as per the materials and in the sizes, grades and locations indicated on the plans and/or designated in the specifications. The Contractor shall be responsible for the adequacy of all piping supports and anchors and shall provide necessary clearances and flexibility so that the piping and equipment is not subject to undue stresses either during erection or operation.

2. Shop drawings showing sizes, materials, fittings, supports, anchors and hanger details, shall be submitted to the Engineer for approval prior to fabrication or installation of the piping.

3. The word "piping" in this paragraph of the specification is in reference to the instrument tubing.

C. Materials: All materials incorporated in the final work shall comply with the latest issue of the following specifications, but in all cases instrument tubing shall be furnished in accordance with ANSI B31.1, Code for Pressure Piping.

1. Copper Tubing

Copper tubing, type DHP	ASTM B68 and B75
Copper pipe, seamless tubing	ASTM B75
Copper pipe, solder-joint fittings	ANSI B16.22
Copper bronze solder-joint fittings for copper pipe	ANSI B16.1

2. Steel Tubing

Steel tubing	ASTM A17
Seamless steel tubing	SAE 1030

3. Aluminum Tubing

Drawn seamless tubes	ASTM B210

4. PVC Piping

Pipe and fittings shall be as specified above.

5. CPVC Piping

Pipe and fittings shall be as specified above.

6. Stainless Steel Tubing

a. Stainless steel tubing and fittings shall be 304L or 316L as indicated on the plans with compression fittings of the same material manufactured by Parker, Hannifin or approved equal.

2.9 WALL PIPES

A. Wall pipes shall be furnished for pipe penetration on walls and at the locations shown on the Drawings. Wall pipes shall meet the requirements of ductile iron pipe as previously defined. Wall pipes shall have the ends as shown and meet the requirements for joints as previously defined. Wall pipes shall have integral waterstop center flange which shall be cast in the wall.

2.10 COUPLINGS AND ADAPTERS

A. All sleeve type couplings for underground pipe shall be mechanical joint couplings in accordance with AWWA C110/A21.10, ANSI/AWWA C111/A21.11.

B. All above ground couplings shall be dresser style 38 or approved equal with restraining rods.

C. All flanged adapters shall be ROMAC flanged coupling adaptors model RFCA (Restrained Flanged coupling adapter) or approved equal. Uniflanges (zip flanges) are not allowed.

2.11 TAPPING SLEEVES AND SADDLES

A. All taps shall be made on fitting bosses or on pipe with tapping saddles. No taps shall be made directly in pipe. Fittings shall only be tapped on fitting bosses.

B. Tapping sleeves shall be used on all taps greater than 2". Tapping sleeves shall be mechanical joint ductile iron type with 125-lb. ANSI standard outlet flange or type 316 stainless steel sleeve type, rated 150 psi minimum. Tapping saddles shall be used on all taps 2" and smaller and shall be banded type, with two (2) 304 stainless steel bands, suitable for bolting in place on the pipe to be tapped. Tapping saddles shall include a

corporation stop for underground service and tapped for NPT when used above ground and in exposed areas such as vaults and wet wells. Sleeves shall meet all the requirements of ASNI/AWWA C110/A21.10 and C111/A21.1.

C. Sleeves shall meet all the requirements of ASNI/AWWA C110/A21.10 and C111/A21.1. Tapping sleeves shall have a full circumferential gasket. For tapping sleeves with an outlet diameter greater than 12", the sleeve shall have an outlet seal gasket. Lubricate pipe and face of gasket with water or soap-water. The Contractor shall not use petroleum based products such as grease or pipe lubricant.

PART 3- EXECUTION

3.1 GENERAL

A. In shipping, delivering, storing and installing, pipe and accessories shall be kept in a sound, undamaged condition. Pipe coating shall not be injured, and no other pipe or material shall be placed inside a pipe or fitting after the coating has been applied.

B. All pipe between structures and terminus shall be of the same size and material and shall be furnished by the same manufacturer. Each pipe length and all fittings shall be clearly marked at intervals of five feet or less with the manufacturer's name or trademark and pipe type or strength.

3.2 EXPOSED PIPING WITHIN BUILDINGS AND STRUCTURES

A. Piping systems installed within the buildings and structures shall be installed essentially where and as shown on the drawings, with ample clearances and allowances for expansion or contraction; operation of all doors and windows; mechanical equipment, etc.; without blocking aisle space; and installed with provision for the weight of the pipe and contents; shall be supported at proper intervals to assure uniform alignment and all other conditions encountered; including, provisions for support connections to the structural members. These support connections are to be so applied as to relieve all structural members of undue stress or strain.

B. It is the intent of this specification that all piping be installed "gas" and "water" tight. Any and all joints otherwise shall be repaired and faulty materials shall be removed from the project site. Test pressures shall be applied by the use of a pump or other suitable device. Pressure shall be maintained for such a time as required to permit the Owner or his representative to complete the inspection of all pipe under test and mark the location of defective joints or other items for further correction. Testing shall be as specified elsewhere in this section.

C. The Contractor shall be responsible for the location and size of any and all sleeves or openings required for the piping systems. He shall arrange for all chases, recesses, inserts or anchors, at proper times and at the proper elevation and location in the building construction. The failure to provide this information shall require that he pay for any and all costs incurred for these corrections. He shall arrange his work with all others engaged on the project, to maintain the proper relationship of this work with the work of all others.

3.3 CONNECTIONS TO EQUIPMENT

A. All connections to equipment shall be with flanges. Equipment with NPT connections shall have a flange installed with a NPT nipple.

3.4 UNDERGROUND PIPING OUTSIDE BUILDINGS AND STRUCTURES

A. Systems installed outside the buildings and structures shall be installed essentially where and as shown on the drawings, with ample clearance and allowances for expansion or contraction; operation of all doors and windows; mechanical equipment, etc. It is the intent of this specification that all piping be installed "gas" and "water" tight. Testing shall be done as herein specified in this section.

B. Handling Pipe: Pipe, fittings and accessories shall be handled in such a manner as to ensure that sound, undamaged pipe entirely suitable in all respects to the specific requirements of each particular fitting, pipe and accessory is provided and installed. Particular care shall be taken not to injure either the coating, the pipe, or threads. Equipment, tools and methods used in loading, reloading, unloading, hauling and laying pipe and fittings shall be such that no damage is done thereto or the coatings thereon. Where hooks are used for lifting, they shall have broad well-padded contact surfaces and shall be of such design and length that they will provide uniform support for a distance back from the end of the pipe not less than one-half of the internal pipe diameter. Defective or damaged coatings or linings may be repaired, if properly done, by and at the expense of this Contractor, who may employ the pipe manufacturer to make such repairs, but in any case, all such field repairs shall be made under the direct supervision of a representative of the pipe manufacturer. No field repair work may be done on any damage, including pipe coating or lining, without prior approval of the Owner's Representative.

C. Cutting, Cleaning, and Inspecting Pipe: The cutting of pipe for closure pieces or for other reasons shall be done in a neat and workmanlike manner by a method which will not damage the pipe. Unless otherwise approved by the Owner's Representative, all cutting of such pipe shall be done by means of mechanical cutter of an approved type. Wheel cutters shall be used wherever practical. After cutting, the interior of the pipe shall be thoroughly swabbed or cleaned of all foreign matter and shall be kept clean during and after installation.

D. Ductile iron pipe shall be cut with an electric or gas powered cutoff wheel.

E. Piping shall be laid to the elevation shown on the plans. Piping without specific elevations that conflicts with other piping that has specific elevations shown on the plans shall be varied in depth or necessary fittings shall be used to avoid the piping with specific elevations shown on the drawings.

F. Water pipe shall be laid to the line and grade shown on the Drawings with all valves and hydrants located as shown on the Drawings.

G. Protection shall be afforded to all underground and surface structures using methods acceptable to the Owner's Representative. This protection shall be furnished by the Contractor at the Contractor's own expense.

H. Subsurface explorations shall be made by the Contractor at the direction of the Owner's Representative where it is necessary to determine the location of existing pipes, valves or other underground structures.

I. When the pipe is assembled at the trench surface, proper support of the pipe using backhoes, cranes, rope, band slings, etc. shall be provided where the pipe is snaked from the trench bottom to trench surface. The Contractor shall not roll the pipe into the trench.

J. After the foundation has been properly graded, bedded when applicable, and the bell holes dug, the pipe and accessories shall be carefully lowered into the trench by approved methods. Under no circumstances shall the pipe or accessories be dropped or dumped into the trench. All damaged pipe and accessories shall be properly repaired or removed from the job. Damaged pipe shall be replaced at the expense of the Contractor.

K. Pipe shall be swabbed clean before it is laid, and any pipe which cannot be cleaned with a swab shall be removed and cleaned with suitable apparatus. Any pipe showing evidence of oil, tar or grease shall be permanently marked and removed from the job. This pipe shall not again be brought on the job site until it has been cleaned to the satisfaction of the Owner's Representative.

L. Connections to existing facilities shall be made where shown on the plans or directed by the Owner's Representative. All connections shall be witnessed by the Owner's Representative. Wet taps, using tapping sleeves and valves, shall generally be made; except as otherwise directed or planned in which case the main shall be cut and the connections made with fittings and valves. In no case shall the Contractor shut off the water or operate the fire hydrants or gate valves in the existing systems without the expressed permission of the Owner. In event such instructions or permissions given by the Owner delays the cutoff, such instructions shall be followed without recourse.

M. In making connections to the existing pipe valves shall be set as shown on the Plans, or at such designated places as the Owner's Representative may direct. If due to unforeseen conditions, these locations have to be changed or additional valves or fittings added, the Contractor shall install the valves or fittings at the new locations.

N. Install yard hydrants as indicated on the Drawings. Yard hydrants shall be set plumb with the nozzle facing away from structure. Finish grade surrounding the hydrant shall be generally flat and clear for a distance of 3 feet surrounding the hydrant. Hydrants shall be field tested upon completion of installation.

3.5 INSTALLATION OF PIPING SYSTEMS

A. Equipment Pipe Connections - Care shall be taken in bolting flanged joints, so that there is no restraint on the opposite end of the pipe or the fitting which would prevent uniform gasket pressure at the connection or would cause unnecessary stresses in the equipment flange. Bolts shall be tightened gradually at a uniform rate and in a program that will result in uniform gasket compression over the entire area of the joint. Special care shall be taken when attaching suction and discharge piping to pumping equipment so that no stresses are transmitted to or imposed on the pump. All pumping connection to pumps or other equipment shall be so installed and so supported that accurate matching of the bolt holes and uniform contact over the entire area of abutting pump or equipment flange and connecting pipe line flange is obtained prior to the installation of any bolt in any flange.

In addition, the pump connecting or equipment piping shall be free to move in all directions parallel to its longitudinal centerline when and while the bolts in the pump connection flange are tightened. Pumps or equipment shall not be grouted prior to the initial fitting and alignment of the pipes connected thereto. They shall, however, in each case be level, aligned and wedged in place in position. The pumps or equipment shall be grouted prior to the final bolting of the connecting piping in accordance with the provision of this paragraph. To provide the maximum flexibility and ease of alignment, the pump or equipment connecting piping shall be assembled with the gaskets in place with only a portion of the flange bolts, not less than four per joint, installed. After aligning and bolting, the pump or equipment connection shall be tested by loosening the flange bolts, if the piping is properly installed, there should be no change in the relationship of the piping flange to the pump or equipment connecting flange.

B. Lining Up Bell and Spigot Pipe - Pipe lines or runs intended to be straight shall be so laid. Deflections from a straight line or grade, made necessary by vertical curves or horizontal curves or offsets, shall not exceed that recommended by the manufacturer of the pipe or approved by the Engineer. If the specified or required alignment requires deflections in excess of those stipulated above, the Contractor shall provide either special bends as approved by the Engineer, or pipes in shorter lengths in such length and number that the annular deflections at any joint, as required by the specified maximum deflections, are not exceeded.

C. Laying Pipe in Trench - Each pipe length, having been properly cleaned and tested, shall be laid on the previously graded trench bottom after the bell hole has been dug; after proper joint cleaning, the joint gasket or rubber ring, if used, shall be placed in the pipe bell. Lubrication as recommended by the pipe manufacturer shall be used on the gasket and spigot end as the pipe in pushed together.

D. Where conditions are, in the opinion of the Owner's Representative, unsuitable for laying pipe because of weather or trench conditions, the Contractor shall be required to cease work until permission is given by the Owner's Representative for work to commence again providing such conditions have been corrected.

1. Only proper and suitable tools and appliances for the safe and convenient handling and laying of pipes and fittings shall be used. Pipe, fittings, and valves shall be carefully handled and lowered into the trench. Under no circumstances shall any pipe or fittings be dumped or rolled into trench or be allowed to drop against the pipe or fitting already in the trench. Great care shall be taken to prevent the pipe lining and coating from being damaged, and any lining or coating damaged in any way shall be repaired by the Contractor to the satisfaction of the Engineer. Before being lowered and while suspended, the pipe shall be inspected for defects and ductile iron pipe rung with a light hammer to detect cracks. Defective, damaged or unsound pipe will be rejected.

2. The interior of the pipe shall be thoroughly cleaned of all foreign matter before being lowered into the trench and shall be kept clean during laying operations by means of plugs or other approved methods. The pipe shall not be laid in water or when the trench or weather conditions are unsuitable for such work. When work is not in progress, open ends of pipe and fittings shall be closed securely so that no trench water, earth, or other substances will enter the pipe or fittings.

3. The full length of each section of underground pipe shall rest solidly upon the pipe bed, and any defects due to settlement shall be made good by the Contractor at his own expense. The ends of pipe shall abut against each other in such manner that there shall be no shoulder or unevenness on the inside of the main. Bell holes shall be dug sufficiently large to ensure the making of proper joints. Special precautions shall be exercised to prevent any pipe from resting on rock.

4. Any pipe that has the grade or joint disturbed after laying shall be taken up and relaid. Any pipe, pipe fittings, or appurtenance found defective after installation shall be replaced without additional expense to the Owner.

5. Except where otherwise necessary in making connections or closures, or as authorized by the Engineer, bell-and-spigot pipe shall be laid with spigot facing in the direction of flow.

E. Where pipe cutting is necessary, it shall be done in a neat and workmanlike manner without damage to the pipe. Unless otherwise authorized, cutting shall be done by means of an approved type of mechanical cutter which will leave a smooth end at right angles to the axis of the pipe and not otherwise damage the pipe or lining. Wheel cutters shall be used when practicable.

Jointing

1. Mechanical joints and push-on joints on ductile iron and PVC pipe and fittings shall be made in accordance with the recommendations of the joint manufacturer, as approved.

2. Permissible Deflection at Joints

   a. No spring of joints to effect a change in direction will be allowed except by permission or direction or as shown on the drawings.
   b. Wherever it is necessary to deflect pipe from a straight line, either in the vertical or horizontal plane, the amount of deflection shall not exceed ½ of that recommended by the pipe or joint manufacturer.
   c. If the required alignment necessitates greater deflections, special bends approved by the Engineer or shorter lengths of pipe to provide angular deflections within acceptable limits shall be furnished.

3. Pipe excavation shall be kept free from water and no joint shall be made under water. The Contractor shall be careful during backfilling to prevent damage to or disturbing of joints and to protect the watertight integrity of the pipes at all times. There shall be no walking on or working over pipe until backfill is over pipe. Backfilling shall be commenced by depositing and tamping earth layers not more than 4 inches thick around and over the pipe to a point not less than 1 foot in depth over the top, after which backfilling of the remainder of the trench may proceed.

4. Sheeting and shoring shall be in accordance with construction methods established in the Associated General Contractors of America Safety Code. The Contractor shall follow this AGC Manual in determining whether or not sheeting

and shoring is required and shall follow the AGC recommended procedure for installation.

5. Thrust Blocks

a. Plugs, caps, tees, and bends, vertically or horizontally, on force main shall be provided with thrust blocking where indicated on the plans.
b. Thrust blocking shall be concrete, minimum 3,000 psi.
c. Unless otherwise indicated or directed, the base and thrust bearing sides of thrust blocks shall be poured directly against undisturbed earth. The sides of thrust blocks not subject to thrust may be poured against forms. The area of bearing shall be as shown on the drawings or directed by the Engineer.
d. Blocking shall be placed so that the fitting joints will be accessible for repair.

3.6 FABRICATION AND INSTALLATION:

A. All piping shall be fabricated and installed by skilled and qualified craftsmen in accordance with specified methods, manufacturer's recommendations, and standard practices. Workmen shall be provided with suitable tools and appliances, adequate scaffolding, and protective devices.

1. Flared ends and threaded ends shall be protected. Great care shall be taken during handling and erection to prevent damages to these parts. Should any part become damaged, it shall not be used and the end shall be cut off, making sure that the tube is cut square across the end to allow the end to be joined properly.

2. Piping shall not obstruct openings, passageways, hoist, and dismantling spaces.

3. Piping connected to equipment shall be supported completely independent of the equipment. Pipe supports shall be installed as specified herein. Piping passing through walls and floors shall be installed in sleeves.

B. Screwed Joints: Pipe threads shall be cut and conform to USAS B21. Pipe shall be accurately cut to length and reamed to full diameter. Joints shall be made with an approved joint compound applied to the male threads only. Valves and fittings shall be made up with care to ensure that there is no distortion or damage to these parts.

C. Flared Tubing and Fittings

1. Aluminum and Copper Tubing: Aluminum and copper tubing shall have SAE 45 degree flare. Fittings shall be of two piece construction and shall be either extruded from solid brass parts or parts machined from solid brass.

2. Aluminum and Copper Tubing (200 psig and below): The application of a compression type joint with a compressing ring may be used.

3. Aluminum and Copper Tubing (above 200 psig): Fittings shall have an inverted flare. In limited space application and in all other cases, standard long nut shall be used as the union connection.

4. Steel Tubing and Fittings: Steel tubing and fittings shall be fabricated to SAE 37 degree flare as recommended by the joint industry conference, hydraulic standards, for industrial equipment.

5. Steel Tubing (150 psig and below): Fittings shall be of the 3-piece type, the nut, body and the additional sleeve, retained by the shoulder of the nut.

6. Steel Tubing (above 150 psig): Fittings shall be of the 2-piece type, the nut and body only.

D. Welded Joints

1. Welded joints shall be in strict accordance with the provisions of the ASME Boiler Code and/or ANSI B31.1, Code for Pressure Piping. The Engineer shall approve Contractor's welding procedures and workmen's credentials before welding is performed under this contract. The Engineer shall have the right at anytime to call for and witness welding tests or designate samples to be taken and tested from joints already welded. All materials, labor, tests and repairs to work shall be at the Contractor's expense.

E. CPVC and PVC pipe

1. When CPVC or PVC pipe is attached to metal pipe or equipment, the transition shall be with a male CPVC or PVC thread into a female metal thread. CPVC or PVC shall never be installed over the metal thread.

F. Tapping Procedure

1. Tapping Preparations

a. Adequate access for mounting the tapping sleeve and the tapping machine must be provided. The pipe must be uncovered if buried. The pipe shall be cleaned thoroughly prior to mounting the tapping sleeve. Loose particles, dust, sand, grease, etc. shall be removed. Normally, no further surface preparation is necessary.

b. The pipe surface shall be inspected for damage in the area underneath and adjacent to the tapping sleeve after cleaning. No damage to the pipe is acceptable in this area.

2. Existing Force Main Shall be Hot Tapped

a. For hot tapping, a specialized tapping machine is always required. In addition to the tapping sleeve and machine, the assembly consists of a branch valve (gate or ball) and the cutting device. The pressure rating of the branch valve and the tapping equipment shall be at least equal to the pressure rating of the pipeline.

b. The tapping sleeve shall be located and oriented according to the plans and/or drawing.

c. Mount the tapping sleeve on the pipe. The installation instructions issued by the tapping sleeve manufacturer for the tapping sleeve shall be used.

d. Mount the valve on the tapping sleeve. Follow the instructions for the valve or flange assembly with respect to bolt torque, seal type, etc.

e. Pressure test to verify sealing of tapping sleeve and valve is recommended prior to tapping. It should be noted that a test with overpressure between sleeve and pipe is more demanding on the rubber seal than a pressure test of the tapped pipe.

   1) If the tapping sleeve is equipped with a test plug, this test can be conducted with the branch valve closed. Otherwise a blind flange with test plug can be mounted on the valve and the test conducted with open valve. Some tapping machines are equipped with a test plug rendering the blind flange superfluous.

   2) Fill the space between the pipe and the tapping sleeve with water, evacuate entrapped air and pressurize to test the integrity of the seals between the sleeve and the pipe and between the sleeve and the valve. The test pressure need not exceed the actual internal pressure of the pipe to be tapped by more than 3 bars. (If a leak occurs, dismount and inspect for dirt or damage. Do not increase the bolt torque on the sleeve). – The test pressure shall also neither exceed the maximum test pressure rating of the tapping sleeve nor the pipe.

f. Mount the tapping machine on the valve. Follow the instructions for the tapping machine or flange assembly with respect to bolt torque, seal type, etc.

g. Make sure that the valve is open and perform the cutting operation.

   1) Cutting tools suitable for cutting of GRP pipe shall be used for cutting the tapping holes. The cutting tools must give a clean cut without tearing or breaking the pipe wall. This is especially important when the cutting device penetrates the inner surface of the GRP pipe to avoid peeling.

      a) A special diamond cutting device for glass fiber laminates is recommended. A closely spaced thin-walled fine tooth steel cutting device may also be used; however, this type of device tends to wear out fast.

      b) Advancement rate of the cutter during drilling must be limited to avoid damage and peeling of the inner surface. A test cut on a pipe wall sample is recommended for operators and tools not previously exposed to GRP pipes.

      c) The cut surface may be left as it is after cutting without further surface penetrations.

h. After cutting, the cutting device with the coupon is retrieved through the valve. The tapping machine with the cutting tool along with the pipe coupon can be removed once the valve is closed.

i. Inspection and hydrostatic test of the assembly can be performed upon completion of installation.

3. Tapping Inspection and Testing

a. Checking, hydrostatic testing, and inspection of the installed pipe assembly shall be performed according to GRP installation instructions.

b. For inspection, the following shall be observed:

1) The tapping sleeve shall not be bulged, deformed, or otherwise damaged.

2) Proper support and thrust restraint is provided.

c. Hydrostatic testing of the sleeve assembly should performed after installation according to GRP installation instructions.

d. The test pressure shall not exceed the lowest of the following:

1) 1.5 times the design pressure or pressure rating of the pipeline system as defined in GRP installation instructions, or

2) Maximum test pressure for the sleeve system as defined for the tapping sleeve.

3.7 TESTING

A. Refer to DIVISION 2 for Testing and Disinfection requirements.

END OF SECTION

SECTION 11110
FLOW MEASUREMENT

PART 1- GENERAL

1.1 SUMMARY

A. This section describes the requirements for an electromagnetic flow meter and transmitter (wastewater applications) and a turbine-style flow meter and transmitter (potable water applications). Under this item, the CONTRACTOR shall furnish and install the flow meters equipment and accessories as indicated on the plans and as herein specified.

1.2 SUBMITTALS

A. Submittals shall be in accordance with Division 1.

B. The following information shall be included in the submittal for this section:

1. Data sheets and catalog literature for the flow meters and the transmitters.

2. Connection diagrams for equipment wiring.

3. List of spare parts and optional equipment.

1.3 OPERATION AND MAINTENANCE DATA

A. Operation and Maintenance Data shall be in accordance with Division 1.

1.4 WARRANTY

A. Warranty shall be in accordance with Division 1.

PART 2- PRODUCTS

2.1 MAGNETIC FLOW METER (WASTEWATER APPLICATIONS)

A. Magnetic flow meter shall be Sitrans Magflo MAG 5100 W Electromagnetic Flowmeter with MAG 6000 Signal Converter as manufactured by Siemens, or approved equal.

B. All enclosures shall be NEMA 4X SS.

C. Spare Parts

1. Spare parts for the equipment shall include the following, unless otherwise noted:

a. One set of manufacturers recommended spare parts.
b. Extra operation manuals as required.

D. OPERATOR FUNCTIONS

1. Calibration

   a. Each flow sensor shall be wet calibrated and all of the calibration information and factory settings matching the sensor shall be stored in an integrally mounted SENSORPROM® memory unit. The SENSORPROM® shall store sensor calibration data and signal converter settings for the lifetime of the product. At initial commissioning, the flowmeter commences measurement without any initial programming. Any customer specified settings are downloaded to the SENSORPROM®. Should the signal converter need to be replaced, the new signal converter will upload all previous settings and resume measurement without any need for reprogramming or rewiring.

   b. A certificate of calibration shall accompany each flow sensor.

2. Converter Function Details

   a. All programming shall be accomplished through an integral keypad and all programming shall be protected by a user-defined password.

   b. The signal converter shall be integrally mounted.

   c. The signal converter shall provide a 0/4-20 mA DC signal proportional to flow rate into 800 ohms max. Output selectable as unidirectional or bi-directional.

   d. The relay shall be programmable as error indicator, limit alarm or pulsed output.

   e. The signal converter system shall be equipped with an error and status log with 4 groups of information.

      1) Information without a functional error involved.
      2) Warnings which may cause malfunction in the application
      3) Permanent errors, which may cause malfunction in the application.
      4) Fatal error, which is essential for the operation of the flowmeter.

   f. A system error shall be indicated by a flashing icon on the display or activation of the relay when set as an error alarm.

   g. The first nine standing errors shall be stored in the error pending log. A corrected error is removed from the error pending log. A status log shall be provided to store the last 9 error messages received for 180 days regardless of correction.

E. REVERIFICATION

1. Verification

a. Verification using a stand-alone Siemens MAGFLO Verificator to measure a number of selected parameters in the flow sensor and signal converter, which affects the integrity of the flow measurement, shall be available through a factory verification service.

2. Parameters

a. Verification of the Flowmeter shall consist of the following test routines:

1) Insulation test of the entire flowmeter system and cables.
2) Test of sensor magnetic properties.
3) Signal converter gain, linearity, and zero point tests.
4) Digital output test.
5) Analog output test.

3. Certificate

a. A certificate of verification shall be issued if the flowmeter passes all of the tests with-in 1% of the original factory test parameters.

2.2 TURBINE TYPE WATER FLOW METER (POTABLE WATER APPLICATIONS)

A. The meter package shall meet or exceed all requirements of ANSI/AWWA Standard C701 for Class II turbine meter assemblies. Each meter assembly shall be performance tested to ensure compliance. The meter package shall meet or exceed all requirements of NSF/ANSI Standard 61, Annex F and G.

B. Maincases

1. The meter maincase shall be of epoxy coated ductile iron composition. The epoxy coating shall be provided as standard fusion-bonded and adhere to NSF for non-lead regulation compliance.

C. Performance

1. The meter assembly shall have performance capability of continuous operation up to the rated maximum flows as listed below without affecting long-term accuracy or causing any undue component wear. The meter assembly shall also provide a 25% flow capacity in excess of the maximum flows listed for intermittent flow demands. Maximum headloss through the meter/strainer assembly shall not exceed those listed in the following table per meter size.

D. Measuring Chamber

1. The measuring chamber shall consist of a measuring element, removable housing, and all-electronic register. The measuring element shall be mounted on a horizontal, stationary stainless steel shaft with sleeve bearings and be essentially weightless in water. The measuring element comes integrated with the advanced Floating Ball Technology design. The measuring chamber shall be capable of operating within the above listed accuracy limits without calibration

when transferred from one maincase to another of the same size. The measuring shall be so configured to capture all flows as specified above.

E. Operating Characteristics:

Meter Size	Low Flow (95% Min.)	Operating Range (98.5 - 101.5%)	Intermittent Flows (98.5 - 101.5%)	Pressure Loss (Not to Exceed)
1-1/2"	0.75 GPM	1.25 to 160 GPM	200 GPM	6.9 PSI @ 160 GPM
2"	1.0 GPM	1.5 to 200 GPM	250 GPM	7.0 PSI @ 200 GPM
3"	1.5 GPM	2.5 to 500 GPM	650 GPM	5.1 PSI @ 500 GPM
4"	2.0 GPM	3.0 to 1000 GPM	1250 GPM	8.7 PSI @ 1000 GPM
6"	2.5 GPM	4.0 to 2000 GPM	2500 GPM	8.2 PSI @ 2000 GPM
8"	4 GPM	5 to 3500 GPM	4700 GPM	5.1 PSI @ 3500 GPM
10"	5 GPM	6 to 5500 GPM	7000 GPM	7.2 PSI @ 5500 GPM

F. Direct Magnetic Drive System

1. The direct magnetic drive shall occur between the motion of the measuring element blade position and the electronic register. The OMNI direct drive system with Floating Ball Technology is designed to extend service life, enhance low flow sensitivity and provide extended flow capacity and overall accuracy of the meter assembly. Any and all additional intermediate, magnetic or mechanical, drive couplings are not acceptable.

G. Electronic Register

1. The meter's register is all-electronic and does not contain any mechanical gearing to display flow and accurate totalization. The electronic register includes the following partial list of features:

    1. AMR resolution units fully programmable
    2. Pulse output frequency fully programmable
    3. Integral data logging capability
    4. Integral resettable accuracy testing feature
    5. Large, easy-to-read LCD display
    6. 10-year battery life guarantee
    7. Provide analog 4-20 mA signal to local PLC

H. Maximum Operating Pressure

1. The meter assembly shall operate properly without leakage, damage, or malfunction up to a maximum working pressure of 200 pounds per square inch (psig).

I. Strainer

1. The meter strainer shall be integral and cast as part of the meter's maincase. The strainer's screen shall have a minimum net open area of at least two (2) times the pipe opening and be a V-shaped configuration for the purpose of maintaining a full unobstructed flow pattern. The strainer body shall be a coated ductile iron

fusion-bonded epoxy identical to that of the meter's maincase. All fasteners shall be stainless steel capable of maintaining the following static pressure ratings and physical dimensions:

Meter Size	Maximum Operating Pressure	Overall Length (Not to Exceed)
1-1/2"	200 PSIG	13"
2"	200 PSIG	17"
3"	200 PSIG	19"
4"	200 PSIG	23"
6"	200 PSIG	27"
8"	200 PSIG	30-1/8"
10"	200 PSIG	41-1/8"

J. Straightening Vane

1. A straightening vane assembly is mandatory and shall be positioned directly upstream of the measuring element. The straightening vane assembly shall be an integral component of the measuring chamber.

K. Connections

1. Flanges for the 1-1/2" and 2" size meter assemblies shall be of the 2-bolt oval flange configuration. The 3", 4", 6", 8" and 10" size meter assemblies shall have flanges of the Class 125 round type, flat faced and shall conform to ANSI B16.1 for specified diameter, drilling and thickness.

L. All sizes of meter packages shall display the sizes, model, manufacturer name, and direction of flow. Such display shall be cast on the side of the meter maincase.

M. Meters shall be guaranteed against defects in material and workmanship for a period of one (1) year from date of shipment. In addition, the meter supplier shall submit nationally published literature clearly outlining its factory maintenance program and current price schedule covering complete measuring chamber exchange.

N. Transmitter

1. Transmitter shall be supplied by the flow meter manufacturer and shall come with 50-ft sensor cable to connect the flow meter and transmitter.
2. Transmitter shall accept pulses or contact closures from the metering device and provide output displaying rate of flow data and totalization of flow.
3. Transmitter shall be capable of sending 4-20 mA signals to local PLC.
4. Enclosure shall be NEMA 4X SS mounted as indicated on the drawings.

O. Manufacturer

1. The flow meter and strainer shall be the Sensus OMNI Turbo T2 or approved equal.
2. The transmitter shall be the Sensus ACT-PAK Model 100DN.

PART 3- EXECUTION

3.1 INSTALLATION

A. Follow manufacturer's recommendation for the minimum upstream and downstream installation requirements for the flow sensor.

B. Wiring between flow sensors and remote mounted transmitters shall use cable type and procedures as per the manufacturers' recommendations.

3.2 FIELD SERVICE

A. Field Service shall be in accordance with Division 1.

3.3 STARTUP

A. Startup shall be in accordance with Division 1.

3.4 TRAINING

A. Training shall be in accordance with Division 1.

END OF SECTION

SECTION 11150
VALVES, HYDRANTS, AND APPURTENANCES

PART 1- GENERAL

1.1 SCOPE

A. The Contractor shall furnish all equipment, labor, materials, and appurtenances required to accomplish the work specified herein.

1.2 DESCRIPTION

A. This section of the Specifications defines the class, type, pressure rating and materials that will be required for various valves, and appurtenances used. Reference is made to Division 15, "Mechanical", regarding end types, materials, class, etc., of the various piping systems. The Contractor shall furnish, install, insulate where required, paint, test, and adjust all valves, hydrants and other miscellaneous equipment, including all auxiliary equipment and devices such as handwheels, operating stands, position indicators, valve tags, valve boxes, extension stems, stem guides, chain wheels, chain and chain hooks, gasketing, and accessories and appurtenances as shown on the Drawings, specified or required for a complete installation.

1.3 SUBMITTALS

A. Submittals shall be in accordance with Division 1.

B. All products included in this section require a submittal.

1.4 OPERATION AND MAINTENANCE DATA

A. Operation and Maintenance Data shall be in accordance with Division 1.

1.5 WARRANTY

A. Warranty shall be in accordance with Division 1.

B. Any such defects, which occur within the stipulated guaranty period, shall be repaired, replaced, or made good at no cost to the Owner.

1.6 RELATED DOCUMENTS

A. Drawings and general provisions of the Contract, including General Conditions and Supplemental General Conditions and Division 1 Specifications Sections apply to this Section.

B. Operation and maintenance manuals shall be provided by manufacturer at least two weeks prior to shipment of major equipment components. Each manual shall be a bound, indexed binder with drawings and parts lists prepared specifically for this project rather than general instructions that are not designed for this project.

1.7 QUALITY ASSURANCE

A. Qualifications

1. Manufacturer's Qualifications:

a. The equipment manufacturer shall modify their standard equipment to meet the minimum values specified for dimensions, design, and the intent of this specification.

b. Manufacturers regularly engaged in the manufacture of the equipment as specified herein and who can demonstrate equipment of this specified design, in actual service for a period of not less than 10 years will be considered as acceptable manufacturers.

c.

d. Manufacturers shall show evidence of quality assurance in manufacturing and supplying equipment essential in details to the equipment herein specified.

2. Component Supply and Compatibility:

a. Obtain all equipment included in this Section, regardless of the component manufacturer, from the equipment supplier for sole source responsibility.

b. The equipment supplier to review and approve or prepare all Shop Drawings and other submittals for all components furnished under this Section.

1.8 DELIVERY, STORAGE, AND HANDLING

A. Packing, Shipping, Handling, and Unloading

1. Deliver materials to the Site to ensure uninterrupted progress of the Work. Deliver anchor bolts and anchorage devices, which are to be embedded in cast-in-place concrete in ample time to prevent delay of that Work.

B. Acceptance at Site

1. All boxes, crates, and packages shall be inspected by Contractor upon delivery to the Site. Contractor shall notify Engineer, in writing, if any loss or damage exists to equipment or components. Replace loss and repair damage to new condition in accordance with manufacturer's instructions.

C. Storage and Protection

1. Store materials to permit easy access for inspection and identification. Keep all material off the ground, using pallets, platforms, or other supports. Protect steel members and packaged materials from corrosion and deterioration.

2. Store all equipment in covered storage off the ground and prevent condensation and in accordance with the manufacturer's recommendations for long-term storage

PART 2- PRODUCTS

2.1 PLUG VALVES

A. Plug valves for sewage and sludge shall be permanently lubricated eccentric plug valves, suitable for at least 125 psi working pressure. Valves installed in horizontal runs of pipe shall be mounted with the plug horizontal and at the top of the body when the valve is open, except as otherwise specified. Valves installed in pipe lines carrying suspended or settleable solids shall be mounted with higher pressure (upstream) against plug face (seat side) when valve is in closed position.

B. Plug valve pressure ratings shall be as follows and shall be established by hydrostatic tests as specified by ANSI Standard B16-1-1967. Pressure ratings shall be 175 psi for valves through 12", 150 psi for valves in sizes 14" through 36" and 125 psi for valves in sizes 42" and larger. Valves shall be capable of providing drip-tight shutoff up to the full rating with pressure in either direction. Valve bodies shall be of ASTM A126 Class B cast iron, in compliance with AWWA Standard C-504, Section 54. All exposed nuts, bolts, springs, washers, etc. shall be zinc plated. Resilient plug facings shall be neoprene, suitable for use with sewage. Valves shall be furnished with corrosion resistant seats which comply with AWWA Standard C507, Section 7, paragraph 7.2, and with AWWA Standard C504 Section 8.3. Seats in 3" and larger valves shall have a welded-in overlay of not less than 90% pure nickel on all surfaces contacting the plug face.

C. Plug valves shall be furnished with replaceable, sleeve-type bearings in the upper and lower journals. These bearings shall comply with AWWA Standard C507, Section 8, paragraphs 8.1, 8.3, and 8.4, and with AWWA Standard C504, Section 9. Valves through 20" shall have stainless steel permanently lubricated upper and lower plug stem bushings. Valves 24" and larger shall have stainless steel upper and lower plug stem sleeves and bronze bushings. Valve shaft seals shall comply with AWWA Standard C507, Section 10, and with AWWA C504 Section 10. Stem bushings with "O" ring seals must be in accordance with AWWA C504, Section 10.3, relative to a removable corrosion resistant recess. All valves 4" and larger shall be of the bolted bonnet design. Valves shall be designed so that they can be repacked without removing bonnet from valve. Packing on all valves shall be adjustable.

D. Flanged plug valves shall be faced and drilled to the ANSI 125/150 lb. standard. Mechanical joint ends shall be to the AWWA Standard C111.

E. Bell ends shall be in accordance with AWWA Standard C100, Class B. Screwed ends shall be in accordance with the NPT Standard.

F. Port areas for plug valves through 20" shall be at least 100% of full pipe area. Port areas of 24" and larger valves shall be at least 80% of full pipe area. The port shall be smoothly shaped with an unobstructed waterway when open.

G. All plug valves 4" and larger shall be equipped with gear actuators. All gearing shall be enclosed, suitable for running oil, with seals provided on all shafts to prevent entry of dirt and water into the actuator. All shaft bearings shall be furnished with permanently

lubricated bronze, bearing bushings. Actuator shall clearly indicate valve position, and an adjustable stop shall be provided to set closing torque. Valve packing adjustment on non-submerged valves shall be accessible without removing the actuator from the valve. Construction of actuator housing shall be semi-steel. All exposed nuts, bolts and washers shall be zinc plated.

H. Plug valves and actuators for submerged or buried service shall have seals on all shafts, and gaskets on valve and actuator covers, to prevent the entry of water. Actuator mounting brackets for submerged service shall be totally enclosed and shall have gasket seals. All exposed nuts, bolts, springs and washers for submerged valves shall be stainless steel.

I. Gear actuators shall be of the type that can be mounted for remote operation and a high head extension, waterproof, enclosure pipe.

J. Plug Valve Floor Stand - Where specified floor stands shall be the handwheel actuated type with valve position indicator. Buried valves shall have pipe encasements around the shaft extension for protection.

K. 4" plug valves shall be capable of passing a 3" spherical solid.

L. Plug valves shall be Dezurik, Milliken or approved equal.

2.2 GATE VALVES

A. Gate valves, 3-1/2 inches and smaller, shall be rising stem, bronze body and bronze trim type. All parts shall be bronze except the handwheel and stem. The stuffing box gland shall be so arranged that the valve may be repacked under pressure.

B. Gate valves, 4 inches and larger, shall be rising stem, iron body, bronze mounted, resilient seats conforming to AWWA C500. Valve ends shall be as required for the piping in which they are installed. Valve ends shall be furnished according to the following specifications:

End Type Specification:

1. Screwed ANSI B 2.1
2. Flanged ANSI B 16.1, 125 psi
3. Mechanical Joint ANSI A 21.11

C. In general, interior gate valves shall have flanged ends, with handwheel and rising stem. Exterior valves shall have bell and spigot or mechanical joint ends with non-rising stem and valve box. The Contractor shall refer to the Drawings for all exceptions. Valve stems shall be manganese bronze with threads accurately cut to gauge. All valves shall have a clear waterway of full diameter of the valve. The handwheel or operating nut of each valve shall have an arrow cast on it showing the direction of opening. Where required, valves shall be equipped with gearing having a ratio of not less than 2 to 1. Gears and shafting shall be approved types and materials. Pinion shafts shall be bushed with bronze, composition A, and shall be provided with suitable oil holes. All gears shall be machine cut. Gate valves shall conform to the following ratings.

Size (inches)	Class	Working Hydrostatic Pressure PSI	Test Pressure PSI
4" and Larger	C	150	300

Class C gate valves shall be Golden Anderson, Crane Company, Mueller or approved equal.

D. Tapping valves shall be the same valves, subject to the standards, providing that tapping valves shall have the tapping ring.

E. All valves shall open left (counter clockwise)

2.3 SWING CHECK VALVES

A. SCOPE

1. This specification covers the design, manufacture, and testing of 2 inch through 48 inch Swing Check Valves suitable for cold working pressures up to 250 psig, in water, wastewater, abrasive, and slurry service.

2. The check valve shall be of the full flow body type, with a domed access cover and only two moving parts, the flexible disc and the disc accelerator.

B. STANDARDS AND APPROVALS

1. The valves shall be designed, manufactured, tested and certified to American Water Works Association Standard ANSI/AWWA C508.
2. The valves used in potable water service shall be certified to NSF/ANSI 61 Drinking Water System Components – Health Effects, and certified to be Lead-Free in accordance with NSF/ANSI 372.
3. Manufacturer shall have a quality management sys-tem that is certified to ISO 9001 by an accredited, certifying body.

C. CONNECTIONS

1. The Valves shall be provided with flanges in accordance with ANSI B16.1, Class 125.

D. DESIGN

1. The valve body shall be full flow equal to nominal pipe diameter at all points through the valve. The 4 in. valve shall be capable of passing a 3 in. solid. The seating surface shall be on a 45 degree angle to minimize disc travel. A threaded port with pipe plug shall be provided on the bottom of the valve to allow for field installation of a back- flow actuator or oil cushion device without special tools or removing the valve from the line.
2. The top access port shall be full size, allowing removal of the disc without removing the valve from the line. The access cover shall be domed in shape to provide flushing action over the disc for operating in lines containing high solids

content. A threaded port with pipe plug shall be provided in the access cover to allow for field installation of a mechanical, disc position indicator.

3. The disc shall be of one-piece construction, precision molded with an integral O-ring type sealing surface and reinforced with alloy steel. The flex portion of the disc contains nylon reinforcement and shall be warranted for twenty-five years. Non-Slam closing characteristics shall be provided through a short 35 degree disc stroke and a disc accelerator to provide a cracking pressure of 0.3 psig.
4. The disc accelerator shall be of one piece construction and provide rapid closure of the valve in high head applications. The disc accelerator shall be enclosed within the valve and shall be field adjustable and replaceable without removal of the valve from the line. The disc accelerator shall be securely held in place captured between the cover and disc. It shall be formed with a large radius to allow smooth movement over the disc surface.
5. The valve disc shall be cycle tested 1,000,000 times in accordance with ANSI/AWWA C508 and show no signs of wear, cracking, or distortion to the valve disc or seat and shall remain drop tight at both high and low pressures.

E. MATERIALS

1. The valve body and cover shall be constructed of ASTM A536 Grade 65-45-12 ductile iron.
2. The disc shall be precision molded EPDM, ASTM D2000-BG.
3. The disc accelerator shall be Type 302 stainless steel.

F. ACCESSORIES

1. A screw-type backflow actuator shall be provided to allow opening of the valve during no-flow conditions. Buna-N seals shall be used to seal the stainless steel stem in a Lead-Free bronze bushing. The backflow device shall be of the rising-stem type to indicate position. A stainless steel T- handle shall be provided for ease of operation.
2. A mechanical indicator shall be provided to provide disc position indication on valves 3" and larger. The indicator shall have continuous contact with the disc under all operating conditions to assure accurate disc position indication.
3. A pre-wired limit switch will be provided to indicate open/closed position to a remote location. The mechanical type limit switch shall be activated by the mechanical indicator. The switch shall be rated for NEMA 4 and shall have U.L. rated 5 amp, 125 or 250 VAC contacts.
4. A welded nickel seat shall be provided for wastewater service applications.

G. LIMIT SWITCH

a. A mechanical indicator shall be installed to provide disc position indication on valves 3" and larger. The indicator shall have continuous contact with the disc under all operating conditions to assure accurate disc position indication.

b. A pre-wired limit switch shall be provided to indicate open/closed position to a remote location. The mechanical type limit switch shall be activated by the mechanical indicator. The switch shall be rated for NEMA 4, and shall have U.L. rated 5 amp, 125 or 250 VAC contacts.

c. The limit switch shall be installed by the valve manufacturer and shall be considered part of the valve and warrantied by the valve manufacturer.

H. MANUFACTURER

1. Manufacturer shall demonstrate a minimum of five (5) years´ experience in the manufacture of resilient, flexible disc check valves with hydraulic cushions.
2. All valves shall be hydrostatically tested and seat tested to demonstrate zero leakage. When requested, the manufacturer shall provide test certificates, dimensional drawings, parts list drawings, and operation and maintenance manuals.
3. The exterior and interior of the valve shall be coated with an NSF/ANSI 61 approved fusion bonded epoxy coating.
4. All miscellaneous metal components of the valve and appurtenances shall be 316 stainless steel.
5. Swing check valves shall be Series #7200 as manufactured by Val-Matic® Valve & Mfg. Corporation, Elmhurst, IL. USA, or approved equal.

2.4 OPERATING MECHANISMS, VALVE BOXES, ETC.

A. Extension Stems shall be made of stainless steel 304 of a diameter to safely withstand the opening and closing thrust encountered in operation of the valves. The exact length of all extension stems shall be determined by measurements in the field.

B. Stem Guides shall be cast iron and bronze bushed. The guides shall be adjustable in two directions to provide full adjustment for proper alignment with the stem. The slenderness ratio (L/4) of the stem shall not exceed 100. Guides shall be spaced per manufacturer recommendations or as shown on the drawings, which ever is more stringent.

C. Valve boxes shall be of cast iron, three-piece screw type with covers and bases. They shall be of suitable size for the valve with which they are used and fully adjustable for depth of setting, extension pieces being furnished where necessary. Drop type covers shall be provided for each box with the proper word, "WATER" or "SEWER" designating the valve service cast into its top surface. Oval type bases shall be provided and shall be so designed to fully support the box without weight of the box and/or superimposed load being transmitted to any part of the valve or adjacent pipe on either side.

D. One foot-eight inch by one foot-eight inch by six inch deep (1' 8" x 1' 8" x 6") concrete collar or equivalent circular precast collar shall be installed around all valve boxes.

E. Wrenches of the various lengths needed shall be provided for operating valves with operating nuts. One wrench of suitable length for each three of such size operating nuts shall be provided.

2.5 YARD HYDRANTS

A. Yard hydrant shall be 3'-0" bury with a 1-1/2" FIP inlet and a 1-1/2" NST horizontal nozzle outlet. Hydrant shall be non-freezing and self-draining. Hydrant shall be operated by a top mounted 10-inch hand wheel; counterclockwise to open, clockwise to close. Hydrant must seal the drain outlet in all positions from ¼ -open to fully open. Hydrants

shall have a 2" iron pipe riser with a cast iron stock top, and non-turning operating rod. Principal interior operating parts shall be brass and removable from the hydrant for servicing without removal of the hydrant.

B. Hydrants shall provide full backflow prevention.

C. Hydrants shall be Eclipse #2A post hydrant as manufactured by the Kupferle Foundry Company or approved equal.

D. Each hydrant shall be supplied with a stainless steel post-mounted hose rack.

E. Weep hole shall be protected by thrust block and 4 cubic yards of crushed stone.

2.6 FIRE HYDRANTS

A. Fire hydrants shall be manufactured in full compliance with this specification and shall also comply with the AWWA Fire Hydrant Specification C-502, latest revision and the following:

1. Type: Compression – Dry Standpipe: Valve shall open against and close with the pressure. The design shall be such that all internal operating parts can be removed through the standpipe and main valve rod extended without excavating.

2. Size: Internal valve diameter shall be minimum 5-1/4".

3. Inlet Size and Type: 6" mechanical joint end with accessories.

4. Hose Nozzles: Each hydrant shall be equipped with two 2-1/2" I.D. hose nozzles with National Standard threads, one quarter turn bayonet lock or threaded in with O-ring seal and suitable locking arrangement.

5. Steamer Nozzle: Each hydrant shall be equipped with one 4-1/2" Steamer Nozzle having National Standard Threads, one quarter turn bayonet lock or threaded in with O-ring seal and suitable locking arrangement.

6. Direction of Open: Left, counter-clockwise.

7. Size and Shape of Operating Nut and Cap Nuts: to be 1-1/2" point to flat pentagon. Each hydrant shall be equipped with a weather cap or weather seal.

8. Seal Plate: The hydrant shall be so constructed that a moisture-proof lubricant chamber is provided which encloses the operating threads, thereby automatically lubricating the threads each time the hydrant is operated. The lubricant chamber shall be enclosed with at least three O-rings. The two lower O-rings will serve as pressure seals; the third O-ring will serve as a combined dirt and moisture seal to prevent foreign matter from entering the lubricant chamber. The hydrant shall be equipped with either and anti-friction washer or bronze bushing to reduce operating torque. The bonnet will be secured to the hydrant using bolts and nuts.

9. Standpipe – Groundline Safety Construction: The standpipe sections shall be connected at the groundline by a two part, bolted safety flange or breakable lugs. The main valve rod sections shall be connected at the groundline by a frangible coupling. The standpipe and groundline safety construction shall be such that the

hydrant nozzles can be rotated to any desired position without disassembling and removing the top operating components and the top section of the standpipe. The minimum inside diameter of the standpipe shall be 6".

10. Main Valve, Rod Assembly: The main valve rod assembly shall be so constructed to allow removal of all operating parts through the standpipe regardless of depth of bury, using a removal wrench which does not extend below the groundline of the hydrant. The main valve seat ring shall be bronze and its assembly into the hydrant shall involve bronze to bronze thread engagement, and the valve assembly pressure seals shall be obtained without the employment of torque compressed gaskets. The design of the main valve rod shall be such that the operating threads at the top of the rod and the valve assembly threads at the bottom of the rod are isolated from contact with water in the standpipe or in the hydrant inlet shoe.

11. Drain Valve: The operation of the drain mechanism shall be correlated with the operation of the main valve and shall involve a momentary flushing of the drain ports each time the hydrant is opened. The drain ports shall be fully closed when the hydrant valve is more than 2-1/2 turns open and the drainage channel in the bronze valve seat ring shall connect two or more outlet drain ports. No springs may be employed in the hydrant valve or drain valve mechanism.

12. Weep hole: in areas where the ground water stands at levels above that of the hydrant drain, the hydrant drain shall be plugged at the time of installation. Weep hole shall be plugged in accordance to manufacturers recommendations. If the drain is plugged, hydrants in service in cold climate areas should be pumped out after usage. Contractor shall mark such hydrants to indicate the need for pumping out after usage. Marking system shall be coordinated with Owner.

13. Depth of Bury: Normally hydrants shall be suitable for installation in trenches 4 feet 6 inches deep. Required parts and materials to adjust fire hydrants to different depth of bury shall be provided by the manufacturer to meet actual field conditions as required.

14. Painting Instruction: At least two prime coats and one finish color coat shall be used and must be applied by the original manufacturer, unless otherwise specified. Exposed area of fire hydrant shall receive one field coat of color Rust-Oleum paint after installation, unless otherwise directed by the inspector. Final field coat shall be brush applied. The wetted surface of the hydrant shoe shall be epoxy coated to prevent corrosion of the waterway. All fire hydrants that arrive at the job site that are not factory painted with color selected by Owner will be rejected. Color to be coordinated with Owner.

15. Pressure Rating: Test pressure 400 psi, working pressure 200 psi.

B. If the standard hydrant provided by the manufacturer does not fully comply with these specifications, but compliance can be attained by providing optional features, then each hydrant must be permanently marked to indicate the option or options that have been provided. The method of marking hydrants to indicate that options are included must beapproved by the OWNER.

C. Hydrants shall be traffic model either Mueller Centurion, Kennedy K81-A, or approved equal.

2.7 BALL VALVES

A. Ball valve material shall be in accordance with the pipe schedule or as indicated on the drawings or as required for the intended service.

B. Ball valves shall be used where shown on the Drawings for all lines 2-inches in diameter or smaller.

C. Ball valves shall be full-port, true union type with ends to meet application.

D. Ball valves shall be manufactured of 316 stainless steel with Teflon seats and Viton "O" rings and shall be listed by NSF for use in potable water.

E. Ball valves shall be as manufactured by Nibco, Inc, Mueller, Trueline, or equal.

2.8 FLEXIBLE CONNECTOR

A. Contractor shall provide Proco Style 240 Single Sphere Connectors, equal flexible connectors as manufactured by The Metraflex Company, Chicago, Illinois, or equal flexible connectors by other approved manufacturers. Provide a minimum of two control rods for each flexible connector.

B. The flexible connectors shall be pressure rated for 225 psi at 230-degrees F. The flexible connectors shall meet or exceed the pressure, movement and dimensional rating of the "Spool" Arch Types as shown in the Rubber Expansion Joint division, fluid Sealing Association "Technical Handbook- Sixth Edition Table V".

C. Connectors shall be furnished complete with hot-dipped galvanized, stainless steel flanges for corrosion protection and shall be tapped to ANSI 150 pound standards.

D. Cover elastomer and tube elastomer shall be Nitrile (Buna-N) for sewer or potable water service. The flexible connectors shall be suitable for use conveying domestic sewage or potable water.

E. The flexible connectors shall be NSF 61 rated for potable water applications.

F. Flange bolts shall be installed with the bolthead on the flexible connector side of the flange.

2.9 LINK SEALS

A. Provide a Link Seal by Thunderline Corporation or equal at all pipe wall penetrations as indicated on the plans.

2.10 QUICK CONNECT FITTINGS

A. Quick Connect fittings shall have aluminum bodies with brass locking arms. All locking arms shall be equipped with locking pins.

B. Male ends shall have an aluminum cap with a brass chain.

C. Female ends shall have an aluminum plug with a brass chain.

D. Fittings attached to hoses shall be with hose shanks. Hose shall be secured to the shank with stainless steel bands as recommended by the hose manufacturer.

2.11 FLANGED WAFER PRESSURE ISOLATORS (SENSOR RING)

A. Isolation rings shall be designed to permit pressure measurement on slurries and other hard-to-handle fluids without compromising gauge function. Isolation ring shall consist of a metal ring with an elastomer inner tube filled with silicone instrument oil. Center section of isolator ring shall be carbon steel. End plates shall be Acetal Homo Polymer (or 316 stainless steel, Kynar, Teflon) and elastomeric sleeve shall be Nitrile (or EPDM, Viton).

B. Sensors (PSW) shall fit inside the bolt circle of 150# ANSI flanges (or shall be provided with appropriate spacers for 300# or 600# flanges). Face to face length of the sensor shall conform to specification MSS-SP67. Sensor shall be flow through design with flexible rubber sleeve around full circumference. The center section shall have a cavity behind the rubber sleeve filled with silicone fluid to transfer pressure to the gauge.

C. All pressure instruments attached to the sensor shall be rigidly supported by a post at least 0.875 inches diameter welded to the isolator. On sensor rings with more than one instrument, all connections shall be 1/2" NPT as a minimum. 1/4" NPT fittings are not acceptable. The sensor ring shall not have a fill plug that can be inadvertently removed with the resultant loss of fill fluid.

D. The sensor shall be vacuum filled and permanently sealed at the factory with a modular seal consisting of a rubber membrane and needle fitting to allow removal and replacement of pressure instruments without compromising the vacuum fill. The needle fitting shall have both 1/4" NPT(F) thread and 1/2 NPT(M) threads. The pressure isolator shall be capable of operating under pressure with all instruments removed with no loss of fill fluid, without isolating valves. Pressure instruments shall be attached to the isolator with a hand tightened lock ring. It shall be possible to remove, rotate or attach pressure instruments to the isolator without requiring the use of any tools. The pressure sensor shall be permanently filled with high viscosity silicone instrument oil to damp out surges or pressure spikes without a separate snubber.

E. Max operating pressure without leakage: 500 psig

F. Pressure isolator shall be Onyx Valve Co model PSW or equal.

2.12 KNIFE GATE VALVES

A. Service Conditions

1. Wastewater applications at ambient temperature.

2. Manufacturer shall be Orbinox – Model series 20 or approved equal.

B. Design features and materials of construction

1. Fully lugged body design providing uni-directional shutoff.

2. Working Pressure Rating: 150 psi for valves 2" to 24"; 100 psi for 30" and 36".

3. Body: 316SS Round port, single piece cast stainless steel body.

4. Gate: Stainless steel (fully machined) gate, material to be same as body.

5. Stem: Stainless steel, single start trapezoidal thread.

6. Seats: Shall be made of EPDM material, and mechanically held in place by means of a stainless steel seat retainer ring, no adhesives or O-ring style seats shall be permitted.

7. Packing: Shall be PTFE impregnated synthetic fiber (ST) with EPDM O-ring, Retained by a one-piece cast stainless steel (same as body material) packing gland which shall be fully accessible for maintenance purposes.

8. Ends: Flange connection shall be per ANSI B16.5 Class 150.

9. Yoke: One-piece formed C.S. yoke, stainless steel.

10. Extension Assembly: Stainless steel tube extension. Stem and yoke assembly remains in its original position. Hand wheel is replaced by a tube which rotates at the time of operating the valve. Stem rises and lowers within the tube.

11. Operator: T-bar and 2" square nut for surface box operation at the wet well top.

12. Factory pressure and leak test per MSS-SP 81.

13. Wall Brackets: Stainless steel wall brackets shall be provided by the manufacturer to support the tube extension. Brackets required every 59".

14. Valve Box: A stainless steel valve box shall be cast into the manhole top to provide surface operation of the knife gate valve.

15. All valve materials, operating assemblies, supports, and appurtenances shall be 316 stainless steel.

2.13 COMBINATION AIR RELEASE AND VACUUM VALVES

A. Description and Service

1. Valve shall have four functions of uninterrupted discharge of air/gas during filling, continuous discharge of dis-entrained pressurized air/gas, unrestricted vacuum break, and pipeline surge protection in a single chamber. Valves shall be anti-surge and anti- shock air release and vacuum break valves.
   a. The large orifice shall allow air to escape during pipeline filling and allow air intake during pipeline draining.

b. The small orifice shall release air accumulations after the pipeline is filled, under pressure and in operation.
c. The valve shall be equipped with an integral surge alleviation mechanism that automatically dampens surge pressures due to rapid air discharge or the subsequent rejoining of separated water columns.

B. Construction and Design

1. The intake/discharge orifice area is equal to the nominal size of the valve, i.e., an 8" valve shall have 8" full flow inlet and 8" outlet.
2. Valve shall utilize solid unbreakable HDPE floats with EPDM O-Ring seals. Floats must not deform, leak or experience damage of any kind at twice the design pressure, with floats providing continuous discharge of pressurized air release without levers, pins, springs that can break.
3. Manufacturer shall have ISO 9001, and third party testing of vacuum and air release flow coefficient to certify sizing and performance of all functions. CFD, FEA or other types of theoretical modeling are not acceptable.
4. Valve shall have a 10 year in-service warranty for all internal components.
5. The valves furnished shall be standard products in regular production by the manufacturer and shall have been in satisfactory and successful operation for a period of at least five (5) years.

C. Materials of Construction:

1. Sewage Air Release and Vacuum Valves

a. 304 Stainless Steel barrel, flanges, top cover and fasteners.
b. Floats: High Density Polyethylene

2. Water Air Release Valves
a. 304 Stainless Steel Barrel, Tie Rods, and Fasteners. 316 Stainless Steel Nozzle. Fusion bonded, epoxy coated ductile iron top and bottom Flanges with ABS Polylac Top Cover.
b. 304 Stainless Steel Barrel, Flanges, Tie Rods and Fasteners. 316 Stainless Steel Nozzle and ABS Polylac Top Cover.
c. 316 Stainless Steel Barrel, Flanges, Tie Rods, Nozzle and Fasteners. ABS Polylac Top Cover.
d. Floats: High Density Polyethylene

D. D. Manufacturer & Model

1. Sewage Air Release and Vacuum Valves
a. Vent-O-Mat Series RGX by RF Valves, Inc. Hanover, Maryland U.S.A.
2. Water Air Release Valves
a. Vent–O–Mat Series RBX by RF Valves, Inc. Hanover, Maryland U.S.A.

2.14 SURGE RELIEF VALVES

A. The Surge Relief Valve have a cast iron body containing a securely fastened bronze or stainless steel ring. Valve shall have 125 psi flanges.

1. The sewage surge relief valve shall be of an "Elbow" body configuration.
2. The potable water surge relief valve shall be of a "Wye" body configuration for through flow.

B. The valve disc will have a resilient replaceable seat firmly held in place by a bronze or stainless steel ring fastened to the disc with screws. In the closed position with line pressures below the spring setting, the valve shall provide drop tight closure. The disc movement shall be guided for proper alignment throughout its stroke and provide for full opening of the pipe line area when required.

C. The valve, normally closed, shall open when the system pressure exceeds the spring adjustment setting. Its opening stroke shall be limited to that which is necessary to provide protection against surge exceeding the spring setting. The valve shall close at a slow speed consistent with adjustment of a self-contained oil cushion chamber that is provided with the valve. The cushioning device shall permit a range of adjustment for closing speeds to prevent hammer or bang.

D. External springs shall be enclosed in protective casings and shall be in compression. Springs that appear to be under extension are not permitted. The disc stem bushing shall be bronze capped with a lantern-type gland vented to atmosphere for revealing seal leakage.

Body, Cover, Disc	Cast Iron	A-126, Class B
Body Seat, Stem, Pilot Valves	Bronze or Alloy	B-62 or Non-Corrosive Equal
Packings, Stem Seals	Buna "N"	Retan, Buna "N" or Equal
Seat Washer, Pilot Seats	Rubber or UHMW	Commercial Retan or Equal
Follower Rings, Rod, Gland Bushings, Screws	Alloy or Bronze	Commercial or Non-Corrosive Equal
Gaskets	Composition	Nitril Rubber & Fibre or Equal

E. All materials and workmanship shall be first- class quality throughout, and the purchaser reserves the right to inspect the valves before shipment. The valves shall comprise of the following materials:

F. Valve shall be rated for a maximum pressure of 175 psi and shall be field adjustable between 60 and 120 psi.

G. Valve shall have a limit switch installed for remote monitoring of valve opening. Limit switch shall be installed by the valve manufacturer as part of the valve and be warranted by the valve manufacturer.

H. The valve shall be a 4" GA Industries, Inc., Figure Number 625-DS for the wastewaterpump station and Figure Number 626-DS for the water booster station. The surge relief valve shall be NSF 61 rated for potable water service.

I. LIMIT SWITCH

1. A mechanical indicator shall be installed to provide disc position indication on valves 3" and larger. The indicator shall have continuous contact with the disc under all operating conditions to assure accurate disc position indication.

2. A pre-wired limit switch shall be provided to indicate open/closed position to aremote location. The mechanical type limit switch shall be activated by the mechanical indicator. The switch shall be rated for NEMA 4, and shall have U.L. rated 5 amp, 125 or 250 VAC contacts.

3. The limit switch shall be installed by the valve manufacturer and shall be considered part of the valve and warrantied by the valve manufacturer.

2.15 RESTRAINED FLANGE ADAPTER

A. Restrained flange adapter shall be Model RFCA as manufactured by Romac Industries, Inc., or approved equal.

B. Restrained flange adapter shall be coated with a fusion epoxy coating and all nuts and bolts shall be 316 stainless steel.

2.16 RUBBER CHECK VALVE

A. Flanged Check Valve

1. Flanges shall be ANSI Class 125#
2. 3/8" minimum thickness steel back up rings shall be provided
3. Maximum 2" cracking pressure
4. Flange and retaining rings shall be 304 stainless steel
5. Elastomer material shall not be affected by highly chlorinated water
6. Valve shall have curved bill design
7. Valves shall be Tideflex Series 35 or approved equal

B. Slip On Check Valve

1. Check valve shall have 304 Stainless Steel mounting band made to clamp to discharge drain
2. Elastomer material shall not be affected by highly chlorinated water
3. Maximum 2" cracking pressure
4. Valve shall have curved bill design
5. Valve shall be Tideflex Series TF-2 or approved equal

2.17 REDUCED PRESSURE ZONE BACKFLOW PREVENTER

A. Reduced Pressure Zone Backflow Preventer assembly shall consist of an internal pressure differential relief valve located in a zone between two positive seating check modules with captured springs and silicone seat discs. Service of all internal components shall be through a single access cover secured with stainless steel bolts. The assembly shall also include two resilient seated isolation valves, for resilient seated test cocks, a protective bronze wye strainer with a 20-mesh screen and an air gap drain fitting.

B. The assembly shall meet the requirements of: the latest available American Water Works Association (AWWA) standards including Std. C511; hold current University of Southern California Foundation for Cross Connection Control and Hydraulic Research (USC) approval and hold the American Society of Sanitary Engineers (ASSE) listing.

C. All RPZ backflow preventers shall be installed in strict accordance with manufacturer's instructions.

D. RPZ shall be rated for supply pressure up to 175 psi.

E. Contractor shall provide all necessary testing and current inspection documentation per local regulation proving the RPZ backflow preventer is functioning properly and is suitable for use.

F. Shall be a Watts Regulator Co. Series 009QT-S or equal. Size shall be as indicated on the drawings.

2.18 SUBMERSIBLE LEVEL TRANSDUCER

A. Submersible level transducer shall be non-fouling with integral protective cage with 2.75" non-clogging PTFE coated elastomeric diaphragm and ±0.25% FSO static accuracy. Submersible level transducers shall be designed to operate in wastewater applications under hostile conditions.

B. Materials of construction:

1. Body: welded 316SS
2. Cable lengths: ETFE
3. Wetted materials: 316SS, PTFE, ETFE

C. Submersible level transducer shall be KPSI 750 as manufactured by TE Connectivity.

2.19 PRESSURE GAUGES

A. Pressure gauges shall be Ashcroft Stainless Steel Type 1009 Duralife® liquid-filled, pressure gauges, ASME B 40.1 Grade 1A (±1% of span) or approved equal. Gauge shall have a 4.5" face.

B. Pressure gauges shall be provided integrally mounted on the pressure sensor by the sensor manufacturer.

C. Pressure gauges shall be installed in the following locations at the wastewater pump station:

Location	**Range**
Discharge	0-100 psi

D. Pressure gauges shall be installed in the following locations at the water booster pump station:

Location	**Range**
Suction	-14-150 psi
Discharge	0-150 psi

2.20 PRESSURE SWITCH

A. Pressure switches shall be Ashcroft B-Series Pressure Switch with NEMA 4X enclosure or approved equal.

B. Ranges shall be as follows:

Adjustable Operating Range	Adjustable differential (psi)
30inches Vacuum to 200 psi	2-25

2.21 PRESSURE GAUGE TRANSMITTER

A. Power Supply: Derived from fieldbus network
B. Signal Input: Process

C. Signal Output: 4-20mA

D. Process Connection:

1. Pressure Tap: 1/2-inch male NPT, 316Ti stainless steel

2. O-Ring Seal: O-ring seals shall be Viton unless otherwise indicated in the Instrument Index.

E. Product Requirements:

1. Pressure transmitter shall be capacitance type with a ceramic pressure sensing diaphragm. Span shall be adjustable over a 10:1 or greater range. Over range capacity without affecting calibration shall be not less than 800 percent of maximum specified range. Adjustable dampening shall be provided. External zero adjustment shall be provided. Accuracy shall be ± 0.2 percent of set span.

2. Transmitter housing shall be 304 stainless steel rated NEMA 4X. Transmitter shall be provided with an integral 4-digit LCD display with bar graph mounted on the side of the transmitter housing.

3. Transmitter shall be available with the following adjustable ranges for gage pressure applications:

Nominal Range (psig)	Minimum Span (psig)
0 to 150	1.5

F. Acceptable Manufacturers:

Endress+Hauser Cerabar S PMC 71 or approved equivalent.

G. Installation:

1. Install in accordance with manufacturer's instructions and as specified herein.

2. A root valve shall be provided at the process pressure tap on the associated process piping. All unused openings on the root valve shall be provided with

plugs of the same material as the root valve. Safety instruments shall not be connected to the same process tap as instruments used for control, indication, or recording. Unless otherwise indicated on the Drawings, the instrument shall be directly connected to and supported from the root valve.

3. Where remote mounting is specified, stainless steel instrument tubing shall be provided from the process pressure tap to the pressure instrument. Unless otherwise specified, pressure instruments shall be located as close as practical to the process tap but shall be positioned to permit observation and maintenance from the process floor.

4. In liquid applications, the instrument tubing shall slope down from the process tap to the pressure transmitter and the pressure tap shall be made in the side of the process pipe. In gas applications the instrument tubing shall slope up from the process tap to the pressure transmitter and the pressure tap shall be made in the top of the process pipe.

H. Application: Application and setup shall be in accordance with manufacturer's recommendations.

I. Test and Calibration: In accordance with manufacturer's recommendations.

J. Training: 4 hour training session covering the setup, calibration, maintenance, and troubleshooting of the pressure measurement system.

2.22 CORPORATION STOPS

K. Corporation stops shall be Ford Ballcorp or equal with corporation thread by flared end for copper tubing. All corporation stops shall be installed with a tapping saddle. Saddles shall be double strap epoxy coated ductile iron with stainless steel straps, bolts and nuts. Saddles shall be Ford Style FC202 or equal.

2.23 FLOAT SWITCH

A. Float Switches: Float switches for both high and low level alarms shall include the following:

a. SPDT mercury switch.
b. Polypropylene casing or high density polyethylene.
c. Cable suspended by waterproof compression connector. Provide lengths suitable for tank and wet well applications.
d. Pipe mount with one inch vertical pipe to inside of tanks.
e. Enclose conductors in conduit from panels to top of tanks.
f. Float switches shall be type LS as manufactured by U.S. Filter Consolidated Electric, Flygt Corp., or equal product.

PART 3- EXECUTION

3.1 INSTALLATION

A. Valves shall be installed in accordance with Manufacturer's instructions.

3.2 SETTING OUTSIDE VALVES

A. Valves installed in trenches shall be located where indicated on the Plans. Valves and valve boxes shall be plumb. Valve boxes shall be placed directly over the valves, the top of the box being constructed flush with the surface of the finished grade in accordance with paragraph 1.3 of this section. After installation, trench shall be backfilled for a distance of 4 feet on each side of the box.

B. All underground valves shall have operator extension rods installed, and shall be pinned at the operating nut. The extension shall come to within one foot of the ground.

3.3 IDENTIFYING VALVES

A. The Contractor shall identify each valve and cleanout except potable water faucets and hose bibbs. The identification system shall proceed consecutively from the influent to the effluent. The same type valves should have a common identification character, for example:
   1. Gate Valves - GV1, GV2
   2. Plug Valves - PV1, PV2
   3. Cleanout - CO1, CO2

B. Valves with a common function should also have a common identification character, for example:
   1. Sludge Return Gate Valves; GV1A, GV1B
   2. Waste Sludge Plug Valves; PV1B, PV2B

C. Each cleanout, valve, and/or cock shall be provided with a 1 inch x 2 inch (min.) heavy brass tag and/or plate. Each tag shall bear the identifying number of the valve as shown above. Each valve tag shall receive a heavy protective coating of a clear lacquer.

D. The tags shall be attached to the valves by handwheel or lever where split-key rings soldered so that rings and tags cannot be removed except where shown in concrete as per standard details. The numbers and letters shall be of block type, 1/2 inch high, stamped thereon and filled with black enamel.

E. The contractor shall furnish and install an approved valve directory. The directory shall show each valve number, the location of each valve, and the equipment, apparatus, or fixtures controlled by that valve, and the number of any other valve or valves that must be operated in conjunction with said valve. The directory shall be framed in a glazed frame with screw eyes and wires for hanging same, and shall be located, as directed by the engineer. Submit shop drawing of valve directory for approval before tagging any valves. Provisions shall be made for unseating way plug valves using the pedestal and lever as shown on the standard detail sheet.

END OF SECTION

SECTION 11300
SEWAGE PUMPS

PART 1 - GENERAL

1.1 SUMMARY

A. Scope

1. The CONTRACTOR shall furnish and install two (2) sewage pumps in accordance with all contract documents and specifications herein.

1.2 SUBMITTALS

A. Provide submittals in accordance with Division 1.

B. Shop Drawings

1. The Contractor shall submit complete shop drawings of all equipment furnished for this project as covered by these specifications. The contractor's submittal must include a certification that the submitted material describes exactly the equipment to be provided or a list of deviations from the specifications with an explanation of each deviation.

1.3 OPERATION AND MAINTENANCE MANUALS

A. Provide operation and Maintenance Manuals in accordance with Division1.

B. Operation and maintenance manuals shall be provided by manufacturer at least two weeks prior to shipment of major equipment components. Each manual shall be a bound, indexed binder with drawings and parts lists prepared specifically for this project rather than general instructions that are not designed for this project.

1.4 QUALITY ASSURANCE

A. Qualifications

1. Manufacturer's Qualifications:

a. The equipment manufacturer shall modify their standard equipment to meet the minimum values specified for dimensions, design, and the intent of this specification.

b. Manufacturers regularly engaged in the manufacture of the equipment as specified herein and who can demonstrate equipment of this specified design, in actual service for a period of not less than 10 years will be considered as acceptable manufacturers.

c. Manufacturers shall show evidence of quality assurance in manufacturing and supplying equipment essential in details to the equipment herein specified.

2. Component Supply and Compatibility:

a. Obtain all equipment included in this Section, regardless of the component manufacturer, from the equipment supplier for sole source responsibility.

b. The equipment supplier to review and approve or prepare all Shop Drawings and other submittals for all components furnished under this Section.

3. Upon completion of the installation, each piece of equipment and each system shall be tested for satisfactory operation without excessive noise, vibration, overheating, etc. All equipment must be adjusted and checked, for misalignment, clearances, supports, and adherence to safety standards.

1.5 DELIVERY, STORAGE, AND HANDLING

A. Packing, Shipping, Handling, and Unloading

1. Deliver materials to the Site to ensure uninterrupted progress of the Work. Deliver anchor bolts and anchorage devices, which are to be embedded in cast-in-place concrete in ample time to prevent delay of that Work.

B. Acceptance at Site

1. All boxes, crates, and packages shall be inspected by Contractor upon delivery to the Site. Contractor shall notify Engineer, in writing, if any loss or damage exists to equipment or components. Replace loss and repair damage to new condition in accordance with manufacturer's instructions.

C. Storage and Protection

1. Store materials to permit easy access for inspection and identification. Keep all material off the ground, using pallets, platforms, or other supports. Protect steel members and packaged materials from corrosion and deterioration.

2. Store all equipment in covered storage off the ground and prevent condensation and in accordance with the manufacturer's recommendations for long-term storage.

1.6 WARRANTY

A. Warranty shall be in accordance with Division 1.

B. Any such defects, which occur within the stipulated guaranty period, shall be repaired, replaced, or made good at no cost to the Owner.

PART 2 - PRODUCTS

2.1 MANUFACTURER

A. Contractor shall provide and install two (2) sewage pumps as manufactured by Flygt or approved equal in accordance with the following specifications.

B. The pump manufacturer must be ISO 9001:2000 revision certified, with scope of registration including design control and service after sales activities.

2.2 PERFORMANCE REQUIREMENTS

A. The pump shall be Flygt, model NP 3202 HT, supplied with a mating cast iron 4-inch discharge connection and can deliver the following performance:

IDENTIFIER	Flow [US g.p.m.]	Head [ft]	Shaft power P2 [hp]	Overall Efficiency [%]	NPSH-values [ft]
Shut-Off Head	0	205			
Design Point	710	162	48.2	60.5	16
Best Efficiency Point	1550	120	62	74.9	22.5
Non-overloading Run-Out	1990	100	69	65	37.5

B. Nameplate Motor HP (minimum): 70 HP

C. Motor Speed (60 Hz, full speed): 1775 RPM

D. The pump shall be automatically and firmly connected to the discharge connection, guided by no less than two guide bars extending from the top of the station to the discharge connection. Sealing of the pumping unit to the discharge connection shall be accomplished by a machined metal to metal watertight contact. Sealing of the discharge interface with a diaphragm, O-ring or profile gasket will not be acceptable. No portion of the pump shall bear directly on the sump floor. Each pump shall be fitted with 25-feet of stainless steel cable permanently attached to 18-inches of 304SS chain rated for 150% of the pump weight. The assembly shall be provided with a stainless steel screw pin shackle for attaching to the pump.

2.3 QUALITY ASSURANCE - REFERENCED STANDARDS:

American Iron & Steel Institute (AISI)
American Society for Testing and Materials (ASTM)
Factory Mutual (FM)
Hydraulic Institute Standards for Centrifugal, Rotary, and Recip Pumps (HI)
National Fire Protection Agency (NFPA)
National Electric Code (NEC)
National Electrical Manufacturers Association (NEMA)
Anti-Friction Bearing Manufacturers Association (AFBMA)
International Standards Organization (ISO) - ISO9001

2.4 PUMP CONSTRUCTION

A. Major pump components shall be of grey cast iron, ASTM A-48, Class 35B, with smooth surfaces devoid of blow holes or other irregularities. The lifting handle shall be of stainless steel. All exposed nuts or bolts shall be of stainless steel construction. All metal surfaces coming into contact with the pumpage, other than stainless steel or brass, shall be protected by a factory applied spray coating of acrylic dispersion zinc phosphate primer with a polyester resin paint finish on the exterior of the pump.

B. Sealing design shall incorporate metal-to-metal contact between machined surfaces. Critical mating surfaces where watertight sealing is required shall be machined and fitted with Nitrile rubber O-rings. Fittings will be the result of controlled compression of rubber O-rings in two planes and O-ring contact of four sides without the requirement of a specific torque limit.

C. Rectangular cross sectioned gaskets requiring specific torque limits to achieve compression shall not be considered as adequate or equal. No secondary sealing compounds, elliptical O-rings, grease or other devices shall be used.

2.5 COOLING SYSTEM

A. Each unit shall be provided with an integral motor cooling system. A stainless steel motor cooling jacket shall encircle the stator housing, providing for dissipation of motor heat regardless of the type of pump installation. An impeller, integral to the cooling system and driven by the pump shaft, shall provide the necessary circulation of the cooling liquid through the jacket. The cooling liquid shall pass about the stator housing in the closed loop system in turbulent flow providing for superior heat transfer. The cooling system shall have one fill port and one drain port integral to the cooling jacket. The cooling system shall provide for continuous pump operation in liquid or ambient temperatures of up to 104°F (40°C). Operational restrictions at temperatures below 104°F are not acceptable. Fans, blowers or auxiliary cooling systems that are mounted external to the pump motor are not acceptable.

2.6 CABLE ENTRY SEAL

A. The cable entry seal design shall preclude specific torque requirements to insure a watertight and submersible seal. The cable entry shall consist of dual cylindrical elastomer grommets, flanked by washers, all having a close tolerance fit against the cable outside diameter and the entry inside diameter. The grommets shall be compressed by the cable entry unit, thus providing a strain relief function. The assembly shall provide ease of changing the cable when necessary using the same entry seal. The cable entry junction chamber and motor shall be sealed from each other, which shall isolate the stator housing from foreign material gaining access through the pump top.

B. Epoxies, silicones, or other secondary sealing systems shall not be considered equal.

2.7 MOTOR

A. The pump motor shall be a NEMA B design, induction type with a squirrel cage rotor, shell type design, housed in an air filled, watertight chamber. The stator windings shall be insulated with moisture resistant Class H insulation rated for 180°C (356°F). The stator

shall be insulated by the trickle impregnation method using Class H monomer-free polyester resin resulting in a winding fill factor of at least 95%.

B. The motor shall be inverter duty rated in accordance with NEMA MG1, Part 31.The stator shall be heat-shrink fitted into the cast iron stator housing. The use of multiple step dip and bake-type stator insulation process is not acceptable. The use of pins, bolts, screws or other fastening devices used to locate or hold the stator and that penetrate the stator housing are not acceptable. The motor shall be designed for continuous duty while handling pumped media of up to 104°F. The motor shall be capable of no less than 30 evenly spaced starts per hour. The rotor bars and short circuit rings shall be made of aluminum. Three thermal switches shall be embedded in the stator end coils, one per phase winding, to monitor the stator temperature. These thermal switches shall be used in conjunction with and supplemental to external motor overload protection and shall be connected to the motor control panel.

C. The junction chamber shall be sealed off from the stator housing and shall contain a terminal board for connection of power and pilot sensor cables using threaded compression type terminals. The use of wire nuts or crimp-type connectors is not acceptable. The motor and the pump shall be produced by the same manufacturer.

D. The motor service factor (combined effect of voltage, frequency and specific gravity) shall be 1.15. The motor shall have a voltage tolerance of +/- 10%. The motor shall be designed for continuous operation in up to a 40°C ambient and shall have a NEMA Class B maximum operating temperature rise of 80°C. A motor performance chart shall be provided upon request exhibiting curves for motor torque, current, power factor, input/output kW and efficiency. The chart shall also include data on motor starting and no-load characteristics.

E. Motor horsepower shall be sufficient so that the pump is non-overloading throughout its entire performance curve, from shut-off to run-out. The motor and cable shall be capable of continuous submergence underwater without loss of watertight integrity to a depth of 65 feet or greater.

F. The power cable shall be sized according to the NEC and ICEA standards and shall be of sufficient length to reach the junction box without the need of any splices. The power cable shall be of a shielded design in which an overall tinned copper shield is included and each individual phase conductor is shielded with an aluminum coated foil wrap. The outer jacket of the cable shall be oil resistant chlorinated polyethylene rubber. The cable shall be capable of continuous submergence underwater without loss of watertight integrity to a depth of 65 feet or greater.

2.8 BEARINGS

A. The integral pump/motor shaft shall rotate on two bearings. The motor bearings shall be sealed and permanently grease lubricated with high temperature grease. The upper motor bearing shall be a two row angular contact ball bearing. The lower bearing shall be a two row angular contact ball bearing to handle the thrust and radial forces. The minimum L_{10} bearing life shall be 50,000 hours at any usable portion of the pump curve.

2.9 MECHANICAL SEALS

A. Each pump shall be provided with a positively driven dual, tandem mechanical shaft seal system consisting of two seal sets, each having an independent spring. The lower primary seal, located between the pump and seal chamber, shall contain one stationary and one positively driven rotating corrosion and abrasion resistant tungsten-carbide ring. The upper secondary seal, located between the seal chamber and the seal inspection chamber shall be a leakage-free seal. The upper seal shall contain one stationary and one positively driven rotating corrosion and abrasion resistant tungsten-carbide seal ring. The rotating seal ring shall have small back-swept grooves laser inscribed upon its face to act as a pump as it rotates, returning any fluid that should enter the dry motor chamber back into the lubricant chamber.

B. All seal rings shall be individual solid sintered rings. Each seal interface shall be held in place by its own spring system. The seals shall not depend upon direction of rotation for sealing. Mounting of the lower seal on the impeller hub is not acceptable. Shaft seals without positively driven rotating members or conventional double mechanical seals containing either a common single or double spring acting between the upper and lower seal faces are not acceptable. The seal springs shall be isolated from the pumped media to prevent materials from packing around them, limiting their performance.

C. Each pump shall be provided with a lubricant chamber for the shaft sealing system. The lubricant chamber shall be designed to prevent overfilling and shall provide capacity for lubricant expansion. The seal lubricant chamber shall have one drain and one inspection plug that are accessible from the exterior of the motor unit. The seal system shall not rely upon the pumped media for lubrication.

D. The area about the exterior of the lower mechanical seal in the cast iron housing shall have cast in an integral concentric spiral groove. This groove shall protect the seals by causing abrasive particulate entering the seal cavity to be forced out away from the seal due to centrifugal action.

E. A separate seal leakage chamber shall be provided so that any leakage that may occur past the upper, secondary mechanical seal will be captured prior to entry into the motor stator housing. Such seal leakage shall not contaminate the motor lower bearing. The leakage chamber shall be equipped with a float type switch that will signal if the chamber should reach 50% capacity.

2.10 PUMP SHAFT

A. The pump and motor shaft shall be a single piece unit. The pump shaft is an extension of the motor shaft. Shafts using mechanical couplings shall not be acceptable. The shaft shall be stainless steel – ASTM A479 S43100-T.

2.11 IMPELLER

A. The impeller shall be of ASTM A-48, Class 35B grey iron, dynamically balanced, semi-open, multi-vane, back swept, screw-shaped, non-clog design. The impeller leading edges shall be mechanically self-cleaned automatically upon each rotation as they pass across a spiral groove located on the volute suction. The leading edges of the impeller shall be

hardened to Rc 45 and shall be capable of handling solids, fibrous materials, heavy sludge and other matter normally found in wastewater.

B. The screw shape of the impeller inlet shall provide an inducing effect for the handling of up to 5% sludge and rag-laden wastewater. The impeller to volute clearance shall be readily adjustable by the means of a single trim screw. The impeller shall be locked to the shaft, held by an impeller bolt and shall be coated with alkyd resin primer.

2.12 VOLUTE / SUCTION COVER

A. The pump volute shall be a single piece grey cast iron, ASTM A-48, Class 35B, non-concentric design with smooth passages of sufficient size to pass any solids that may enter the impeller. Minimum inlet and discharge size shall be as specified. The volute shall have a replaceable suction cover insert ring in which are cast spiral-shaped, sharp-edged groove(s). The spiral groove(s) shall provide trash release pathways and sharp edge(s) across which each impeller vane leading edge shall cross during rotation so to remain unobstructed. The insert ring shall be of ASTM A-48, Class 35B grey iron and provide effective sealing between the multi-vane semi-open impeller and the volute housing.

2.13 PROTECTION

A. Each pump motor stator shall incorporate three thermal switches, one per stator phase winding and be connected in series, to monitor the temperature of the motor. Should the thermal switches open, the motor shall stop and activate an alarm. A float switch shall be installed in the seal leakage chamber and will activate if leakage into the chamber reaches 50% chamber capacity, signaling the need to schedule an inspection.

PART 3 - EXECUTION

3.1 MANUFACTURER'S SERVICE REPRESENTATIVE

A. The Contractor shall provide for the startup of the pumps to be accomplished under the supervision of an experienced startup engineer from the manufacturer/supplier. Said startup engineer shall be at the jobsite for a minimum of one working day to inspect the installation of each pump and direct the startup. The CONTRACTOR shall have the manufacturer's startup engineer provide written certification the pump and all appurtenances are correctly installed, with all specified and required components, and that each is capable of meeting the specified performance requirements. This written certification shall be submitted to the ENGINEER prior to the startup of any system.

3.2 STARTUP

A. Startup shall be in accordance with Division 1.

B. Upon completion of the installation, each piece of equipment and each system shall be tested for satisfactory operation without excessive noise, vibration, overheating, etc. All equipment must be adjusted and checked, for misalignment, clearances, supports, and adherence to safety standards.

3.3 TRAINING

A. Training shall be in accordance with Division 1.

B. The CONTRACTOR shall be responsible for the successful startup and testing of each the equipment. The CONTRACTOR shall provide all necessary facilities, manpower, chemicals, tools, instrumentation, and laboratory testing services required during this phase of the WORK.

3.4 CLEANUP

A. After completion of testing the CONTRACTOR shall remove all debris from the site and clean the entire system to render it ready for startup.

END OF SECTION

SECTION 11500
HORIZONTAL SPLIT CASE PUMPS

PART 1- GENERAL

1.1 SCOPE

A. The contractor shall furnish and install two (2) single-stage, double suction, horizontal split case pumping units as specified herein and shown on the contract drawings.

B. The term "pumping unit" or "units" shall be defined as a pump complete with base plate, coupling, coupling guard, motor, and variable frequency drives if applicable.

C. The pump manufacturer shall be responsible for supplying the complete pumping unit as defined above and shall assume complete system responsibility.

1.2 CODES AND STANDARDS

A. HI (Hydraulic Institute)
B. ANSI (American National Standards Institute)
C. ASTM (American Society of Testing and Materials)
D. IEEE (Institute of Electrical and Electronics Engineers)
E. NEMA (National Electrical Manufacturers Association)
F. NEC (National Electric Code)
G. ISO 9001 (International Organization for Standardization)
H. UL (Underwriters Laboratories, Inc.)
I. OSHA (Occupational Safety and Health Administration)
J. ASME (American Society of Mechanical Engineers)
K. IEC (International Electrotechnical Commission)
L. ETL (Electrical Testing Laboratories)
M. AFBMA (Antifriction Bearing Manufacturer's Association)

1.3 SUBMITTALS

A. In accordance with Division 1.

1.4 QUALITY ASSURANCE

A. To ensure unity of responsibility, the complete pump unit shall be supplied, tested, and warranted by the pump manufacturer.

B. The equipment specified under this section is to be standard pumping equipment manufactured by a company with no less than fifteen years' experience in the manufacture of such equipment. Upon request by the

engineer, the manufacturer shall provide proof of such experience by providing installation lists, brochures, catalog cuts, etc.

C. The manufacturer of the pump units shall have a quality management system in place and shall be ISO 9001 certified.

PART 2- PRODUCTS

2.1 GENERAL

A. The pumping units provide under this section shall be supplied by one manufacturer.

B. Each pumping unit shall be provided with a stainless steel nameplate, which shall contain the following information:

1. Manufacturer's name, address, and telephone number
2. Model number
3. Serial number
4. Head, capacity and rpm at rated condition
5. Motor horsepower, rpm and frame size

C. Pumping units within each type of service shall be identical in every respect with all parts being interchangeable.

D. Pump rotating assemblies shall be balanced in accordance with the requirements of ANSI S2.19, G6.3.

E. Vibration, when measured at the pump bearing housing shall not exceed the limitations specified by the Hydraulic Institute Standards.

2.2 HYDRAULIC DESIGN CRITERIA

A. Rated Condition:

1. Capacity = 604 US GPM
2. Head in Feet = 110 FT
3. Minimum Efficiency = 74 %
4. Maximum NPSHr = 10 ft

B. Operating Characteristics

1. Service = Potable Drinking Water
2. Shut-off Head = 143 FT
3. Maximum Brake Horsepower = 23.5 HP
4. Maximum Operating Speed = 1800 rpm

2.3 DETAILS OF CONSTRUCTION

A. Pump Casing

1. Pump casing shall be of close grain cast iron type ASTM A48, class 40, designed for heavy-duty service. The casing shall be horizontally split; single volute type with the suction and discharge flanges cast integrally with the lower half in order that the upper part may be removed for inspection of the rotating element without disturbing pipe connections or pump alignment. Pump mounting feet are to be cast integrally into the lower half casing with the mounting surface completely machined. The joint between halves of the casing shall be heavily flanged and bolted, and provided with dowel pins to insure accurate alignment. The upper half-casingflange shall have tapped holes for jackscrews. The interior shall be smooth and free from surface defects.

2. Thickness, diameter and drilling dimensions of suction flanges shall be Class 125 ANSI standard. Discharge flanges shall be Class 125 ANSI standard. Pump casings shall have a minimum 4 " suction and a 3 " discharge. Casings shall be drilled and tapped for vertical priming, gauge, and drain connections. Suitable lifting lugs or eyebolts shall be provided.

B. Impeller

1. Impeller shall be of the double suction enclosed type made entirely of ASTM B584-975 bronze finish smooth all over and of ample strength and stiffness for maintaining the maximum capacity of the unit.

2. It shall be statically and dynamically balanced and shall be keyed to the shaft and securely held in axial position on the shaft by means of ASTM B505-954 bronze sleeves extended through the stuffing box. Rotation of the shaft sleeves shall be prevented by the impeller key, which shall extend beyond the impeller hub and into the shaft sleeve on both sides of the impeller. Shaft sleeves shall be held in position by a locking shaft sleeve nut located outside of the stuffing box and shall have an O-ring seal between the sleeve and the nut to prevent entrance of air or liquid between the shaft and sleeve. Sleeves, which are threaded on to the pump shaft, are not acceptable.

C. Wear Rings

1. At the running joint between the suction and discharge chambers, there shall be provided wear rings on both the casing and impeller.

2. The casing rings shall be of ASTM B505-927 bronze, positioned in the casing and locked against rotation by the upper half of the case.

3. Impeller rings shall be of ASTM B505-932 bronze, so fastened that they cannot rotate or become loose when the pump is subjected to reversed rotation. The rings shall be made to limit gauges, so that they may be renewed without fitting.

D. Pump Shaft

1. The shaft shall be of AISI 1141 and of such dimensions that the maximum combined stress due to bending and torsion shall not exceed 8,000 pounds per square inch under the most severe conditions of operation.

2. The shaft shall be accurately machined over its entire length. The first critical speed of the rotating assembly shall occur at not less than 150% of the rated speed.

3. Threads on the pump shaft shall be located outside of the stuffing box.

E. Stuffing Boxes (Mechanically Sealed)

1. Stuffing boxes shall be provided with mechanical shaft seals.

2. Stuffing boxes shall accept packing or mechanical seals without modification to the stuffing box.

3. Mechanical seals shall be furnished with a carbon seal ring, ceramic mating ring, viton elastomers and 316 stainless steel metal parts.

4. Mechanical seals shall be rated for 250 PSIG pressure. The elastomers shall be rated for temperatures ranging from -20 degrees F to 400 degrees F.

5. Pump shaft sleeves shall be furnished with a pre-machined groove designed to accept a setting ring, which shall eliminate the need for set collars or stop collars. Seals requiring stop or set collars with set-screws are not acceptable.

6. The rotating seal ring shall be provided with a 360 degree rubber encasement to provide a positive drive for the seal face without the need for metal drive notches which may cause face distortion or notch wear. The seal rings shall be permanently fixed in place and full flatness maintained by a precision crimp in the outer seal case.

7. The mechanical seal shall be of a convoluted design which permits free movements providing constant adjustment for shaft endplay and seal face wear. Positive face contact with the stationary seat shall be maintained at all times.

8. To insure positive sealing by free movement of the seal head, the seal shall feature a hex style outer shell and drive band which shall absorb start-up and running torque and shall eliminate in stress on the diaphragm. Metal components shall freely engage and shall not be subject to lock down due to friction wear.

9. Suitably valved connecting lines or passages shall be provided on the upper half casing leading from the discharge volute to the stuffing box for lubricating the stuffing boxes with the liquid being pumped.

F. Bearings

1. Bearings shall be of the anti-friction type grease lubricated ball.

2. The bearing configuration shall consist of one single row deep grooved anti-friction bearing on the inboard side and two single row deep grooved anti-friction bearings mounted back to back on the outboard side. The inboard bearing shall be designed to take the radial thrust loads. The outboard bearings shall be designed to take a combination of loads, both radial and axial; and hold the rotor in axial alignment.

3. Bearings shall have a minimum rated service life of 40,000 hours in accordance with the standards of the Bearings Manufacturers Association throughout the specified operating range. Bearings shall be mounted in dust tight housings shall be rigidly supported by suitable brackets, which shall be cast with integrally with the lower half or the pump casing. Bearing housings or bearing housing supports, which are bolted to the side of the pump casing, are not acceptable.

G. Pump Base

1. The pump and motor shall be mounted on a common base of fabricated ASTM A36 steel. Bent metal or formed bases are not acceptable.

2. The base shall be provided with a coupling guard, and ample grout holes and with drip lip rim.

3. All mounting surfaces shall have a machined finish.

H. Couplings

1. The coupling shall be Martin Quadra-flex or approved equal with type S flanges and elastomeric sleeves of Hytrel, EPDM or similar material.

2. Sized to transmit the maximum required horsepower with a 1.5 service factor.

I. Motors

1. Motor manufacturer shall be an active member of NEMA. Motors shall be products of Nidec (USEM), Baldor, Teco-Westinghouse or approved equal.

2. Motor manufacturer shall have experience in the design and manufacture of similar products for a minimum of 10 years. Buy-outs or private labeled motors are not acceptable.

3. Service Conditions:

   a. Suitable for service indoors in a clean environment.
   b. Ambient temperature not greater than 40 degrees C.
   c. Voltage variation of +/- 10%
   d. Frequency variation of +/- 5%
   e. Combination of C.3 and C.4 above, not to exceed 10%

4. Motors shall be NEMA frame horizontal units rated 25 horsepower, 1800 RPM (four pole) with Totally Enclosed Fan Cooled (TEFC) enclosure rating meeting the requirements of IEEE 841 and rated for a 1.15 service factor on sine wave power.

5. Unless otherwise specified, power supply shall be 460/3/60 (for nominal 480 volt system).

6. Unless otherwise specified, motors shall have three leads terminating in the main motor conduit box. Paralleled leads are acceptable above 200 HP.

7. Insulation shall be rated minimum Class F (155 degrees C.)

    a. Magnet wire shall be copper and rated Class H (180 degrees C.) spike resistant wire.
    b. Magnet wire shall be classified Pulse Endurance, suitable for variable frequency applications.
    c. Varnish shall be 100% solids polyester. Water borne varnish is not acceptable. Motor stators shall be double dipped and baked

8. Rotor bar construction shall be cast aluminum.

9. Maximum temperature rise at rated HP shall not exceed Class B limits (80 degrees C) on sine wave power.

10. Maximum temperature rise at 1.15 Service Factor shall not exceed Class F limits (155 degrees C.)

11. Motors shall be premium efficiency in accordance with "NEMA PREMIUM" TM values for horsepower, speed and enclosure.

12. Motors applied to variable frequency drives shall adhere to NEMA MG-1 Part 31 and shall be name-plated accordingly.

13. Motor windings shall include two (2) 100 ohm platinum RTDs in each phase (total of six (6) winding RTDs.

14. The driven machine shall not overload the motor rating at any operating point.

15. Bearings:

    a. Bearings shall be rated for a 5-year minimum L-10 life at operating condition.
    b. Bearings shall be antifriction type, ball or roller as required.
    c. Bearings shall be protected by Inpro VBX or equal labyrinth seals on both ends with the drive end incorporating a shaft grounding ring as noted in this specification.
    d. Bearings shall include one (1) 100 ohm platinum RTD per bearing (total of two (2) RTDs.

16. Shaft Grounding shall be installed in the motor drive end (DE) and incorporated into the DE bearing isolator. Shaft grounding shall be Inpro CDR(TM), AEGIS(TM) 841 SGR or equal.

17. Lubrication:

    a. Grease lubricated bearings shall be designed for electric motor use. Grease shall be capable of higher temperatures associated with electric motors and shall be equal to Exxon Polyrex EM™.
    b. Grease fittings shall be AlemiteTM type, no smaller than ¼" NPT.
    c. Grease exits shall be automatic pressure relief type, no smaller than ¼" NPT.

18. Vibration shall not exceed 0.08 inches per second, peak to peak.

19. Noise level shall not exceed 85 db (A) at 1 meter, no load, free field.

20. Motors shall have permanent lifting eyes or lugs capable of a safety factor of five (5).

21. All external fasteners shall be hexagon-head, cadmium or zinc plated class 5 or better. Slotted head, Phillips head and socket head fasteners are acceptable only for use internally and not exposed to the external environment. Metric fasteners are not acceptable.

22. Final paint finish shall be corrosive resistant and capable of passing ASTM-B117 250 hour salt spray test.

23. Anti-condensation heaters shall be provided to keep motor windings at least 10 degrees F. above ambient temperature. Heaters shall be 1/60/115 with leads terminating in a separate auxiliary outlet box.

24. Grounding provisions shall be in the main terminal box.

2.4 FACTORY TESTING

A. Each pump shall undergo a certified hydrostatic test at 150% of the pressure developed at shut-off head.

B. A certified performance test shall be performed on each unit utilizing its specified drive. If variable frequency drives are specified, one drive of

each rating shall be shipped to the pump manufacturer's plant for testing as a complete unit.

C. All tests shall be performed in accordance with the Hydraulic Institute Test Standards for Centrifugal Pumps - 1.6 (1988).

D. Six evenly spaced test points shall be taken and shall include conditions at shut-off (zero flow) and the operating points specified herein. Preliminary test data must be submitted to the owner seven days prior to the actual test date.

E. The engineer and/or a representative of the owner shall be given sufficient notice of the testing dates and shall have the opportunity to witness these test.

2.5 WARRANTY

A. The manufacturer of the pumping units shall provide a written warranty covering the entire pumping unit.

B. The warranty shall be in effect for a period of one year after final acceptance or 18 months after the original ship date, which ever expires first.

PART 3- EXECUTION

3.1 MANUFACTURER'S SERVICE REPRESENTATIVE

A. The Contractor shall provide for the startup of the pumps to be accomplished under the supervision of an experienced startup engineer from the manufacturer/supplier. Said startup engineer shall be at the jobsite for a minimum of one working day to inspect the installation of each pump and direct the startup. The CONTRACTOR shall have the manufacturer's startup engineer provide written certification the pump and all appurtenances are correctly installed, with all specified and required components, and that each is capable of meeting the specified performance requirements. This written certification shall be submitted to the ENGINEER prior to the startup of any system.

3.2 START UP

A. Startup shall be in accordance with Division 1.

B. Upon completion of the installation, each piece of equipment and each system shall be tested for satisfactory operation without excessive noise,

vibration, overheating, etc. All equipment must be adjusted and checked, for misalignment, clearances, supports, and adherence to safety standards.

3.3 TRAINING

A. Training shall be in accordance with Division 1.

B. The CONTRACTOR shall be responsible for the successful startup and testing of each the equipment. The CONTRACTOR shall provide all necessary facilities, manpower, chemicals, tools, instrumentation, and laboratory testing services required during this phase of the WORK.

3.4 FACTORY FIELD SERVICE

A. The manufacturer of the pumping unit shall provide, at no additional cost to the owner, the services of a field service representative for a period of one (1) day within one (1) trip.

B. The time specified shall require at least two trips to the project site. One trip for supervision during the installation of the units and one trip for operator training shall be provided.

END OF SECTION

SECTION 11810
PIPE IDENTIFICATION MARKERS

PART 1- GENERAL

1.1 SUMMARY

A. Scope

1. This section includes the installation of the process pipe identification markers as shown on the Drawings and as specified herein.

1.2 SUBMITTALS

A. A. Provide submittals in accordance with Division 1.

B. Shop Drawings

1. The Contractor shall submit complete shop drawings of all equipment furnished for this project as covered by these specifications. The submittals shall include pipe identification abbreviations, flow arrow directions, and valve tags identification. The contractor's submittal must include a certification that the submitted material describes exactly the equipment to be provided or a list of deviations from the specifications with an explanation of each deviation.

1.3 QUALITY ASSURANCE

A. Qualifications

1. 1. Manufacturers regularly engaged in the manufacture of pipe markers as specified herein and who can demonstrate equipment of this specified design, in actual service for a period of not less than 10 years will be considered as acceptable manufacturers.

2. Manufacturers shall show evidence of quality assurance in manufacturing and supplying equipment essential in details to the equipment herein specified.

1.4 DELIVERY, STORAGE, AND HANDLING

A. Packing, Shipping, Handling, and Unloading

1. Deliver materials to the Site to ensure uninterrupted progress of the Work. Deliver anchor bolts and anchorage devices, which are to be embedded in cast-in-place concrete in ample time to prevent delay of that Work.

B. Acceptance at Site

1. 1. All boxes, crates, and packages shall be inspected by Contractor upon delivery to the Site. Contractor shall notify Engineer, in writing, if any loss or damage

exists to equipment or components. Replace loss and repair damage to new condition in accordance with manufacturer's instructions.

C. Storage and Protection

1. Store materials to permit easy access for inspection and identification. Keep all material off the ground, using pallets, platforms, or other supports. Protect steel members and packaged materials from corrosion and deterioration.

2. Store all equipment in covered storage off the ground and prevent condensation and in accordance with the manufacturer's recommendations for long-term storage.

1.5 WARRANTY

A. Warranty shall be in accordance with Division 1

PART 2- PRODUCTS

2.1 PIPE MARKERS

A. Pipe markers shall be vinyl self-adhesive with a peel off backing suitable for indoor or outdoor piping with pipe temperatures from -40deg F to 175 deg F.

B. Markers shall be in accordance with ASME (ANSI) A13.1-2007.

C. Marker Letters

1. Marker letters shall meet the requirement of ASME (ANSI) specifications and shall conform to the follow table.

LETTER SIZE TABLE

Outside Diameter of Pipe or Covering*	Size of Legend Letters
3/4-inches to 1-3/8 inches	1/2-inches
1-1/2-inches to 2-3/8--inches	3/4-inches
2-1/2-inches to 7-7/8-inches	1-1/4-inches
8-inches to 10-inches	2-1/2-inches
10-inches and Over	3-1/2-inches

*Outside diameter shall include pipe diameter plus insulation and jacketing.

2.2 DIRECTIONAL ARROWS

A. Directional arrows shall be 5 nil self-adhesive vinyl on a roll. Width of roll shall be 2" with a continuous band of arrows.

PART 3- EXECUTION

3.1 INSTALLATION

A. Pipe markers shall be installed on clean dry pipe.

B. All pipe markers shall be installed plumb and level.

C. Pipe markers shall be installed every 10 feet, at the entrance and exit from buildings, inlet, and outlet from tanks and general where necessary to clearly identify pipes.

D. All pipe markers shall be installed in strict accordance with manufacturer's instructions.

END OF SECTION

SECTION 11820
DISINFECTION AND FLUSHING OF WATER PUMPING AND PIPING SYSTEMS

PART 1 - GENERAL

1.01 REFERENCES

A. The following is a list of standards which may be referenced in this section:

1. American Water Works Association (AWWA):

   a. B300, Hypochlorites.
   b. B302, Ammonium Sulfate.
   c. B303, Sodium Chlorite.
   d. C651, Disinfecting Water Mains.
   e. C652, Disinfection of Water Storage Facilities.
   f. C653, Disinfection of Water Treatment Plants.

2. Standard Methods for the Examination of Water and Wastewater, as published by American Public Health Association, American Water Works Association, and the Water Environment Federation.

1.02 SUBMITTALS

A. Informational Submittals:

1. Plan describing and illustrating conformance to appropriate AWWA standards and this Specification.
2. Procedure and plan for cleaning system.
3. Procedures and plans for disinfection and testing.
4. Type of disinfecting solution and method of preparation.
5. Method of disposal for highly chlorinated disinfecting water.

PART 2 - PRODUCTS

2.01 WATER FOR DISINFECTION

A. Clean, uncontaminated, and potable.

B. Contractor shall make arrangements for water supply and convey water in disinfected pipelines or containers.

2.02 CONTRACTOR'S EQUIPMENT

A. Furnish chemicals and equipment, such as pumps and hoses, to accomplish disinfection.

B. Water used to fill pipeline may be supplied using a temporary connection to existing distribution syste1n. Provide protection against cross-connections as required by AWWA C651.

2.03 DISINFECTANT

A. All disinfection shall be accomplished using 12 percent sodium hypochlorite.

PART 3 - EXECUTION

3.01 GENERAL

A. Conform to AWWA C651 for pipes and pipelines, C652 for tanks and reservoirs, and C653 for water treatment plants, except as modified in these Specifications.

B. Disinfect items installed or modified under this Project intended to hold, transport, or otherwise contact potable water, or as identified herein, including, but not limited to, the following:

1. Both water booster pumps.
2. All exposed and buried water piping.
3. Disinfect surfaces of materials that will contact disinfected water, both during and following construction, using one of the methods described in AWWA C652 and C653. Disinfect prior to contact with disinfected water. Take care to avoid recontamination following disinfection.

C. Prior to application of disinfectants, clean all items of loose and suspended material.

D. Allow freshwater and disinfectant solution to flow into pipe or vessel at a measured rate so chlorine-water solution is at specified strength. Do not place concentrated liquid commercial disinfectant in pipeline or other facilities to be disinfected before it is filled with water.

3.02 SEQUENCING AND SCHEDULING

A. Commence disinfection after completion of following:

1. Completion and acceptance of internal painting of system(s).
2. Hydrostatic and pneumatic testing, pressure testing, functional and performance testing and acceptance of pipelines, pumping systems, structures, and equipment.

3. Disinfection of equipment and associated system piping.

3.03 PIPING

A. Cleaning:

1. Before disinfecting, clean all foreign matter from pipe in accordance with AWWA C651.
2. If the continuous feed method or the slug method of disinfection, as described in AWWA C651 is used, flush pipelines with potable water until clear of suspended solids and color. Provide hoses, temporary pipes, ditches, and other conduits as needed to dispose of flushing water without damage to adjacent properties.
3. Flush service connections and hydrants. Flush distribution lines prior to flushing hydrants and service connections. Operate valves during flushing process at least twice during each flush.
4. Flush pipe through flushing branches and remove branches after flushing is completed.
5. A minimum flushing velocity of 3.0 fps must be maintained throughout the flushing process.

B. Disinfecting Procedure: In accordance with AWWA C651, unless herein modified.

3.04 PUMPS

A. Disinfecting Solutions: Minimum free chlorine concentration of 100 ppm.

B. Application:

1. Inject disinfecting solution into pump and associated piping and circulate for a minimum 3-hour period of time. At end of 3-hour period, solution shall have a strength of at least 50 ppm free chlorine.
2. Operate valves and pump appurtenances during disinfection to ensure that disinfecting solution is dispersed into all parts of pump and lines.
3. If disinfecting solution contained in pump has a residual free chlorine concentration less than 50 ppm after the 3-hour retention period, reclean pump, reapply disinfecting solution, and retest until a satisfactory test result is obtained.
4. After chlorination, flush water from pump until water through the unit is chemically and bacteriologically equal to permanent source of supply.

3.05 TANKS AND WET WELLS

A. Cleaning:

1. Clean interior surfaces using water under pressure before sterilizing. Isolate tank from system to prevent contaminating materials from entering the distribution system. Cleaning shall:

   a. Remove all deposits of foreign nature.
   b. Remove all biological growths.
   c. Clean the slopes, walls, top, and bottom
   d. Avoid damage to the structure.
   e. Avoid pollution or oil deposits by workers and equipment.

2. Dispose of water used in cleaning in accordance with applicable regulations before adding disinfecting solution to tank and wetwell.

B. Disinfecting Procedure: In accordance with AWWA C652, unless herein modified. Parts of structures, such as ceilings or overflows that cannot be immersed, shall be spray or brush disinfected.

3.06 DISPOSAL OF HEAVILY CHLORINATED WATER

A. Do not allow flow into a waterway without neutralizing disinfectant residual.
B. See the appendix of AWWA C651, C652, and C653 for acceptable neutralization methods.

3.07 TESTING

A. Collection of samples:

1. Coordinate activities to allow Samples to be taken by Owner in accordance with this Specification.
2. Provide valves at sampling points.
3. Provide access to sampling points
4. At least 2 samples shall be taken 16 hours apart.
5. Sampling locations must be separated a minimum of 1,200 linear feet.

B. After all water piping and equipment has been cleaned, disinfected, and refilled with potable water, Owner will take water samples and the Contractor shall pay for the laboratory analysis.

C. No coliform bacteria may be detected during sampling. If minimum samples required above are bacterially positive, disinfecting procedures and bacteriological testing shall be repeated until bacterial limits are met. The Contractor shall be responsible for additional laboratory testing costs if additional testing is required.

END OF SECTION

SECTION 13005
SIGNAGE

PART 1 - GENERAL

1.1 SUMMARY

A. Drawings and general provisions of the Contract, including General and Supplementary Conditions and Division 01 Specification Sections, apply to this Section.

B. The work covered by this section consists of furnishing all labor, equipment, and materials necessary to install signage as specified herein.

1.2 SUBMITTALS

A. Provide submittals in accordance with Division 1.

B. Shop Drawings

1. The contractor shall submit complete shop drawings of all equipment furnished for this project as covered by these specifications. The contractor's submittal must include a certification that the submitted material describes exactly the equipment to be provided or a list of deviations from the specifications with an explanation of each deviation.

1.3 QUALITY ASSURANCE

A. Manufacturer's Qualifications:

1. The equipment manufacturer shall modify their standard equipment to meet the minimum values specified for dimensions, design, and the intent of this specification.
2. Manufacturers regularly engaged in the manufacture of the equipment as specified herein and who can demonstrate equipment of this specified design, in actual service for a period of not less than 10 years will be considered as acceptable manufacturers.
3. Manufacturers shall show evidence of quality assurance in manufacturing and supplying equipment essential in details to the equipment herein specified.

B. Component Supply and Compatibility:

1. Obtain all equipment included in this Section, regardless of the component manufacturer, from the equipment supplier for sole source responsibility.
2. The equipment supplier to review and approve or prepare all Shop Drawings and other submittals for all components furnished under this Section.

1.4 DELIVERY, STORAGE, AND HANDLING

A. Packing, Shipping, Handling, and Unloading

1. Deliver materials to the Site to ensure uninterrupted progress of the Work. Deliver anchor bolts and anchorage devices, which are to be embedded in cast-in-place concrete in ample time to prevent delay of that Work.

B. Acceptance at Site

1. All boxes, crates, and packages shall be inspected by Contractor upon delivery to the Site. Contractor shall notify Engineer, in writing, if any loss or damage exists to equipment or components. Replace loss and repair damage to new condition in accordance with manufacturer's instructions.

C. Storage and Protection

1. Store materials to permit easy access for inspection and identification. Keep all material off the ground, using pallets, platforms, or other supports. Protect steel members and packaged materials from corrosion and deterioration.
2. Store all equipment in covered storage off the ground and prevent condensation and in accordance with the manufacturer's recommendations for long-term storage.

1.5 PROJECT CONDITIONS

A. Weather Limitations: Proceed with installation only when weather conditions permit installation of signs in exterior locations to be performed according to manufacturers' written instructions and warranty requirements.

1.6 COORDINATION

A. Coordinate placement of anchorage devices with templates for installing signs.

1.7 WARRANTY

A. All equipment and workmanship furnished under this contract shall be guaranteed to be free of defects in materials and workmanship for a period of one (1) year from substantial completion or eighteen (18) months from the date of shipment, whichever occurs first. Any such defects, which occur within the stipulated guaranty period, shall be repaired, replaced, or made good at no cost to the Owner.

PART 2 - PRODUCTS

2.1 MANUFACTURER

A. Signs shall be Seton or approved equal. Sign wording as indicated herein has been taken from the Seton catalog when possible to avoid special order signs.

2.2 TYPE A SIGNS – FIBERGLASS SIGNS

A. Type A signs shall be OSHA signs of premium quality surface printed fiberglass reinforced polyester for extra outdoor durability, resistant to chemicals and graffiti with the following characteristics:
1. Size: 20 inches x 14 inches
2. Material Construction: 0.10 fiberglass reinforced plastic
3. Standard Legend Colors: Red, blue, green, and black
4. Standard Background Colors: White and Yellow
5. Thickness: 0.10 Inch
6. Gloss: 25 Gardner Units
7. Service Temperature: -40 Deg F to 193 Deg F
8. Abrasion Resistance: CS-17 Wheel 1000 g wt Overlaminate and Legend Withstands Up To 20,000 Cycles
9. Average Outdoor Durability: 25 Years

2.3 TYPE B SIGNS – ENGRAVED PLASTIC NAMEPLATES

A. Type B signs shall be Setonflex engraved plastic nameplates, resistant to chemicals and graffiti with the following characteristics:
1. Size:
   a. C.1 – 12" x 4"
   b. C.2 – 8" x 4"
   c. C.3 – 4" x 2"
2. Material Construction: 0.063 in Setonflex plastic
3. Color Options: as selected by Engineer and Owner
4. Thickness: 0.063 Inch
5. Gloss: 55 Gardner Units
6. Service Temperature: -40 Deg F to 175 Deg F
7. Abrasion Resistance: CS-17 Wheel 1000 g wt Overlaminate and Legend Withstands Up To 1,200 Cycles
8. Average Outdoor Durability: 5 Years

2.4 ACCESSORIES

A. Anchors and Inserts: Provide nonferrous-metal or hot-dip galvanized anchors and inserts for exterior installations and elsewhere as required for corrosion resistance. Use toothed steel or lead expansion-bolt devices for drilled-in-place anchors. Furnish inserts, as required, to be set into concrete or masonry work.

PART 3 - EXECUTION

3.1 EXAMINATION

A. Examine substrates, areas, and conditions, with Installer present, for compliance with requirements for installation tolerances and other conditions affecting performance of work.

B. Verify that items, including anchor inserts, and electrical power are sized and located to accommodate signs.

C. Proceed with installation only after unsatisfactory conditions have been corrected.

3.2 INSTALLATION

A. Locate signs and accessories where indicated, using mounting methods of types described and complying with manufacturer's written instructions.

1. Install signs level, plumb, and at heights indicated, with sign surfaces free of distortion and other defects in appearance.
2. Interior Wall Signs: Install signs on walls adjacent to latch side of door where applicable. Where not indicated or possible, such as double doors, install signs on nearest adjacent walls. Locate to allow approach within 3 inches of sign without encountering protruding objects or standing within swing of door.

B. Wall-Mounted Signs: Comply with sign manufacturer's written instructions except where more stringent requirements apply.

1. Mechanical Fasteners: Use nonremovable mechanical fasteners placed through predrilled holes. Attach signs with fasteners and anchors suitable for secure attachment to substrate as recommended in writing by sign manufacturer.

C. Dimensional Characters: Mount characters using standard fastening methods to comply with manufacturer's written instructions for character form, type of mounting, wall construction, and condition of exposure indicated. Provide heavy paper template to establish character spacing and to locate holes for fasteners.

1. Projected Mounting: Mount characters at projection distance from wall surface indicated.

3.3 CLEANING AND PROTECTION

A. After installation, clean soiled sign surfaces according to manufacturer's written instructions. Protect signs from damage until acceptance by Owner.

END OF SECTION

SECTION 13120
PRECAST CONCRETE BUILDING

PART 1 – GENERAL

1.1 SUMMARY

A. Contractor to furnish a precast concrete building. Building to be field assembled by manufacturer on contractor's poured-in-place foundation. Precast building to be EASI-SPAN™ brand as manufactured by Smith-Midland™ Corporation, Midland, VA or Smith-Carolina™ Corporation, Reidsville, NC. Building to be provided by manufacturer with all necessary openings as specified by contractor in conformance with manufacturer's structural requirements.

1.2 QUALITY ASSURANCE

A. ACI-318-02, "Building Code Requirements for Reinforced Concrete". Concrete Reinforcing Institute, "Manual of Standard Practice".

B. ANSI/ASCE-7-02 "Building Code Requirement for Minimum Design Loads in Buildings and Other Structures".

C. IBC 2006, 1996 BOCA

D. Concrete Reinforcing Institute, "Manual of Standard Practice".

E. UL-752 test method level 4 for bullet resistance certified by an independent structural engineer.

F. Fabricator must be a certified producer/member of The Precast/Prestressed Concrete Institute (PCI), National Precast Concrete Association (NPCA) or equal.

G. Building fabricator must have a minimum of 5 years' experience manufacturing and setting transportable precast concrete buildings.

1.3 DESIGN REQUIREMENTS

A. Dimensions: As indicated on Contract Drawings.

B. Design Loads:

1. Seismic load performance category 'C', Exposure Group III
2. Standard Live Roof Load – 60 PSF
3. Standard Floor Load – 250 PSF (if precast floor provided by building manufacturer)
4. Standard Wind Loading – 130 MPH

C. Roof: Roof panel shall have a minimum of 8" slope from peak to edge. The roof shall extend 4" beyond the wall panel and have a turndown design which extends 1/2" below the top edge of the wall panels to prevent water migration into the building along top of wall panels. Roof shall also have an integral architectural ribbed edge.

D. Keyway Roof Joints: Grout in keyways shall be polymer concrete placed after coating keyways with a methyl methacrylate resin and isocyanate resin. Top of keyway must be coated with primer followed by one coat of a polymeric joint sealant followed by a fiberglass resin fabric followed by a second coat of polymeric joint sealant.

E. Floor panel or contractor supplied poured-in-place slab must have a 1/2" step-down around the entire perimeter to prevent water migration into the building along the bottom of wall panels.

1.4 SUBMITTALS

A. Engineering calculations that are designed and sealed by a professional engineer, licensed to practice in the state where the project is located, shall be submitted for approval.

PART 2 – PRODUCTS

2.1 MATERIALS

B. Concrete: Steel-reinforced, 5000 PSI minimum 28-day compressive strength, air-entrained (ASTM C260).

C. Reinforcing Steel: ASTM A615, grade 60 unless otherwise specified.

D. Post-tensioning Strand: Roof and floor (if required) shall be post-tensioned in field after grout keyway is filled and has cured to required PSI strength. Post-tensioning cable shall be 41K polystrand CP50, .50", 270 KSI, 7-wire strand, enclosed within a greased plastic sheath (ASTM A416). There will be a minimum of three post-tensioning cables connecting roofs and floors together to provide a watertight joint.

E. Caulking: Joint between building and floor slab shall be caulked on the exterior and interior surface of the joints. Caulking shall be SIKAFLEX-1A elastic sealant or equal. Exterior caulk joint to be 3/8" x 3/8" square so that sides of joint are parallel for correct caulk adhesion. Back of joint to be taped with bond breaking tape to ensure adhesion of caulk to parallel sides of joint and not the back.

F. Panel Connections: All panels shall be securely fastened together with 3/8" thick steel brackets. Steel is to be of structural quality, hot-rolled carbon complying with ASTM A283, Grade C and hot dipped galvanized after fabrication. All fasteners to be 1/2" diameter bolts complying with ASTM A307 for low-carbon steel bolts. Cast-in anchors used for panel connections to be Dayton-Superior #F-63 or equal. All inserts for corner connections must be bolted directly to form before casting panels. No floating-in of connection inserts shall be allowed. Wall panels shall be connected to floor slab with 4" expansion anchors by manufacturer.

2.2 FINISHES

A. Interior of Building: Smooth steel form finish on all interior panel surfaces.

B. Exterior of Building: Architectural precast concrete brick finish: Finish must be imprinted in top face of panel while in form using an open grid impression tool similar to EASI-BRICK™. Finished brick size shall be 2 3/8" x 7 1/8" with vertical steel float or light broom finish. Joints between each brick must be 3/8" wide x 3/8" deep. Back of joint shall be concave to simulate a hand-tooled joint. Each brick face shall be coated with the following acrylic concrete stain: 1) Cementrate by FOSROC; or, 2) Canyon Tone stain by United Coatings. Stain color shall be Brick Red unless specified otherwise. Stain shall be applied per manufacturer's recommendation. Joints shall be kept substantially free of stain to maintain a gray concrete color.

PART 3 – EXECUTION

3.1 SITE PREPARATION REQUIREMENTS

A. Slab on grade to be minimum 6" thick and 4,000 psi steel reinforced concrete. Slab to be level within 1/8" in both directions and capable of supporting loads imposed by the structure. Floor panel must have a 1/2" step-down around the entire perimeter to prevent water migration into the building along the bottom of wall panels.

3.2 ACCESS

Contractor must provide a level unobstructed area large enough for a crane and a tractor-trailer to park adjacent to the pad. Crane must be able to place outriggers within 5'-0" of edge of pad and truck and crane must be able to get side by side under their own power. No overhead lines may be within 75' radius of center of pad. Firm roadbed with turns that allow 65' lowbed tractor-trailer must be provided directly to site. No building shall be placed closer than 2'-0" to an existing structure.

END OF SECTION 13120

SECTION 15010
BASIC MECHANICAL REQUIREMENTS

PART 1 - GENERAL

1.1 RELATED DOCUMENTS

A. Drawings and general provisions of Contract, including General and Supplementary Conditions and Division 1 Specification Sections, apply to this and the other sections of Division 15.

1.2 SUMMARY

A. This Section includes general administrative and procedural requirements for mechanical installations. The following administrative and procedural requirements are included in this Section to expand the requirements specified in Division 1:

1. Submittals.
2. Coordination drawings.
3. Record documents.
4. Maintenance manuals.
5. Rough-ins.
6. Mechanical installations.
7. Cutting and patching.

1.3 SUBMITTALS

A. General: Follow the procedures specified in Division 1.

1.5 RECORD DOCUMENTS

A. Prepare record documents in accordance with the requirements of project closeout. In addition to the requirements specified in Division 1, indicate the following installed conditions:

1. Ductwork mains and branches, size and location, for both exterior and interior; locations of dampers and other control devices; filters, boxes, and terminal units requiring periodic maintenance or repair.
2. Mains and branches of piping systems, with valves and control devices located and numbered, concealed unions located, and with items requiring maintenance located (i.e., traps, strainers, expansion compensators, tanks, etc.). Valve location diagrams, complete with valve tag chart. Indicate actual inverts and horizontal locations of underground piping.
3. Equipment locations (exposed and concealed), dimensioned from prominent

building lines.

4. Approved substitutions, Contract Modifications, and actual equipment and materials installed.

1.6 MAINTENANCE MANUALS

A. Prepare maintenance manuals in accordance with Division 1. In addition to the requirements specified in Division 1, include the following information for equipment items:

1. Description of function, normal operating characteristics and limitations, performance curves, engineering data and tests, and complete nomenclature and commercial numbers of replacement parts.
2. Manufacturer's printed operating procedures to include start-up, break-in, and routine and normal operating instructions; regulation, control, stopping, shutdown, and emergency instructions; and summer and winter operating instructions.
3. Maintenance procedures for routine preventative maintenance and troubleshooting; disassembly, repair, and reassembly; aligning and adjusting instructions.
4. Servicing instructions and lubrication charts and schedules.

1.7 DELIVERY, STORAGE, AND HANDLING

A. Deliver products to the project properly identified with names, model numbers, types, grades, compliance labels, and other information needed for identification.

PART 2 - PRODUCTS (Not Applicable)

PART 3 - EXECUTION

3.1 ROUGH-IN

A. Verify final locations for rough-ins with field measurements and with the requirements of the actual equipment to be connected.

B. Refer to equipment specifications in Divisions 2 through 16 for rough-in requirements.

3.2 MECHANICAL INSTALLATIONS

A. General: Sequence, coordinate, and integrate the various elements of mechanical systems, materials, and equipment. Comply with the following requirements:

1. Coordinate mechanical systems, equipment, and materials installation with other

building components.

2. Verify all dimensions by field measurements.
3. Arrange for chases, slots, and openings in other building components during progress of construction, to allow for mechanical installations.
4. Coordinate the installation of required supporting devices and sleeves to be set in poured-in-place concrete and other structural components, as they are constructed.
5. Sequence, coordinate, and integrate installations of mechanical materials and equipment for efficient flow of the Work. Give particular attention to large equipment requiring positioning prior to closing in the building.
6. Where mounting heights are not detailed or dimensioned, install systems, materials, and equipment to provide the maximum headroom possible.
7. Coordinate connection of mechanical systems with exterior underground and overhead utilities and services. Comply with requirements of governing regulations, franchised service companies, and controlling agencies. Provide required connection for each service.
8. Install systems, materials, and equipment to conform with approved submittal data, including coordination drawings, to greatest extent possible. Conform to arrangements indicated by the Contract Documents, recognizing that portions of the Work are shown only in diagrammatic form. Where coordination requirements conflict with individual system requirements, refer conflict to the Architect.
9. Install systems, materials, and equipment level and plumb, parallel and perpendicular to other building systems and components, where installed exposed in finished spaces.
10. Install mechanical equipment to facilitate servicing, maintenance, and repair or replacement of equipment components. As much as practical, connect equipment for ease of disconnecting, with minimum of interference with other installations. Extend grease fittings to an accessible location.
11. Install systems, materials, and equipment giving right-of-way priority to systems required to be installed at a specified slope.
12. MECHANICAL CONTRACTOR IS RESPONSIBLE FOR FURNISHING MOTOR STARTERS/VARIABLE FREQUENCY DRIVES/DISCONNECT SWITCHES FOR ALL MECHANICAL EQUIPMENT. Refer to division 16 specification sections for starters, disconnects, variable frequency drives, electrical devices, and wiring requirements. The mechanical contractor shall install starters/variable frequency drives/disconnect switches. The mechanical contractor is responsible for making final connections from junction boxes provided by electrical contractor to motor starters/variable frequency drives/disconnect switches and to mechanical equipment supplied. If a junction box is not provided by the electrical contractor, the mechanical contractor is responsible for making final connection from the disconnect switch through the mechanical equipment.
13. Duct smoke detectors are to be furnished by electrical contractor, installed in duct by mechanical contractor, and wired by electrical contractor.
14. Controls contractor is responsible for final power connections to control panels, dampers, etc, from junction boxes provided by Electrical contractor.

15. Controls contractor is responsible for all wiring required for controls and instrumentation not indicated on the drawings.

3.3 CUTTING AND PATCHING

A. General: Perform cutting and patching as follows:

1. Protection of Installed Work: During cutting and patching operations, protect adjacent installations.

B. Perform cutting, fitting, and patching of mechanical equipment and materials required to:

1. Uncover Work to provide for installation of ill-timed Work.
2. Remove and replace defective Work.
3. Remove and replace Work not conforming to requirements of the Contract Documents.
4. Remove samples of installed Work as specified for testing.
5. Upon written instructions from the Architect, uncover and restore Work to provide for Architect/Engineer observation of concealed Work.

C. Provide and maintain temporary partitions or dust barriers adequate to prevent the spread of dust and dirt to adjacent areas.

D. Patch finished surfaces and building components using new materials, specified for the original installation and experienced Installers.

END OF SECTION

SECTION 15738
SPLIT SYSTEM AIR-CONDITIONING UNITS

PART 1 - GENERAL

1.1 SUMMARY

A. This Section includes split-system air-conditioning and heat pump units consisting of separate evaporator-fan and compressor-condenser components. Units are designed for exposed or concealed mounting, and may be connected to ducts.

1.2 DEFINITIONS

A. Evaporator-Fan Unit: The part of the split-system air-conditioning unit that contains a coil for cooling (heat rejection for heating operation in heat pump units) and a fan to circulate air to conditioned space.

B. Compressor-Condenser Unit: The part of the split-system air-conditioning unit that contains a refrigerant compressor and a coil for condensing refrigerant (evaporator for heating operation in heat pump units).

1.3 SUBMITTALS

A. Product Data: Include rated capacities; shipping, installed, and operating weights; furnished specialties; and accessories for each type of product indicated. Include performance data in terms of capacities, outlet velocities, static pressures, sound power characteristics, motor requirements, and electrical characteristics.

B. Shop Drawings: Diagram power, signal, and control wiring and differentiate between manufacturer-installed and field-installed wiring.

C. Samples for Initial Selection: Manufacturer's color charts consisting of units of sections of units showing the full range of colors available for units with factory-applied color finishes.

D. Maintenance Data: For split-system air-conditioning units to include in maintenance manuals.

E. Warranties: Special warranties specified in this Section.

1.4 QUALITY ASSURANCE

A. Product Options: Drawings indicate size, profiles, and dimensional requirements of split-system units and are based on the specific system indicated. Other manufacturers' systems with equal performance characteristics may be considered. Refer to Division 1 Section "Substitutions."

B. Electrical Components, Devices, and Accessories: Listed and labeled as defined in NFPA 70, Article 100, by a testing agency acceptable to authorities having jurisdiction, and marked for intended use.

1.5 WARRANTY

A. General Warranty: Special warranty specified in this Article shall not deprive Owner of other rights Owner may have under other provisions of the Contract Documents and shall be in addition to, and run concurrent with, other warranties made by Contractor under requirements of the Contract Documents.

B. Warranty Period: Five years from date of substantial completion.

1.6 EXTRA MATERIALS

A. Furnish extra materials described below that match products installed and that are packaged with protective covering for storage and identified with labels describing contents.

1. Filters: One set of filters for each unit.

PART 2 - PRODUCTS

2.1 MANUFACTURERS

A. Subject to compliance with requirements as specified on drawings, provide products by one of the following:

1. Carrier Corp.
2. Mitsubishi.
3. Airedale International
4. Trane Co. (The); Unitary Products Group.
5. York International Corp.
6. EMI – Enviromaster International LLC

2.2 WALL- OR CEILING-MOUNTED, EVAPORATOR-FAN COMPONENTS

A. Cabinet: Enameled steel or ABS plastic with removable panels on front and ends, and discharge drain pans with drain connection.

B. Refrigerant Coil: Copper tube, with mechanically bonded aluminum fins, complying with ARI 210/240, and with thermal-expansion valve.

C. Electric Coil: Helical, nickel-chrome, resistance-wire heating elements with refractory ceramic support bushings; automatic-reset thermal cutout; built-in magnetic contactors; manual-reset thermal cutout; airflow proving device; and one-time fuses in terminal box for overcurrent protection.

D. Fan and Motor: Centrifugal fan, directly driven by multispeed, electric motor with integral overload protection; resiliently mounted.

E. Filters: Permanent, cleanable.

2.3 AIR-COOLED, COMPRESSOR-CONDENSER COMPONENTS

A. Casing: Steel, finished with baked enamel, with removable panels for access to controls, weep holes for water drainage, and mounting holes in base. Provide brass service valves, fittings, and gage ports on exterior of casing.

B. Compressor: Hermetically sealed with crankcase heater and mounted on vibration isolation. Compressor motor shall have thermal- and current-sensitive overload devices, start capacitor, relay, and contactor.

1. Compressor Type: Reciprocating or Scroll.
2. Two-speed compressor motor with manual-reset high-pressure switch and automatic-reset low-pressure switch.

C. Refrigerant Coil: Copper tube, with mechanically bonded copper fins, complying with ARI 210/240, and with liquid subcooler.

D. Heat Pump Components: Reversing valve and low-temperature air cut-off thermostat.

E. Fan: Aluminum-propeller type, directly connected to motor.

F. Motor: Permanently lubricated, with integral thermal-overload protection.

G. Mounting Base: Polyethylene.

2.4 ACCESSORIES

A. Thermostat: 24 volt functioning to remotely control compressor and evaporator fan, with the following features:

1. Compressor time delay.
2. 24-hour time control of system stop and start.
3. Liquid-crystal display indicating temperature, set-point temperature, time setting, operating mode, and fan speed.
4. Fan-speed selection, including auto setting.

B. Automatic-reset timer to prevent rapid cycling of compressor.

C. Refrigerant Line Kits: Soft-annealed copper suction and liquid lines factory cleaned, dried, pressurized, and sealed; factory-insulated suction line with flared fittings at both ends.

PART 3 - EXECUTION

3.1 INSTALLATION

A. Install units level and plumb.

B. Install evaporator-fan components using manufacturer's standard mounting devices securely fastened to building structure.

C. Install ground-mounted, compressor-condenser components on polyethylene mounting base.

D. Connect precharged refrigerant tubing to component's quick-connect fittings. Install tubing to allow access to unit.

3.2 CONNECTIONS

A. Piping installation requirements are specified in other Division 15 Sections. Drawings indicate general arrangement of piping, fittings, and specialties.

B. Install piping adjacent to unit to allow service and maintenance.

C. Unless otherwise indicated, connect piping with unions and shutoff valves to allow units to be disconnected without draining piping. Refer to piping system Sections for specific valve and specialty arrangements.

D. Ground equipment.

1. Tighten electrical connectors and terminals according to manufacturer's published torque-tightening values. If manufacturer's torque values are not indicated, use those specified in UL 486A and UL 486B.

3.3 FIELD QUALITY CONTROL

A. Installation Inspection: Engage a factory-authorized service representative to inspect field-assembled components and equipment installation, including piping and electrical connections, and to prepare a written report of inspection.

B. Leak Test: After installation, charge system and test for leaks. Repair leaks and retest until no leaks exist.

C. Operational Test: After electrical circuitry has been energized, start units to confirm proper motor rotation and unit operation. Remove malfunctioning units, replace with new components, and retest.

D. Test and adjust controls and safeties. Replace damaged and malfunctioning controls and equipment.

3.4 COMMISSIONING

A. Engage a factory-authorized service representative to perform startup service.

B. Verify that units are installed and connected according to the Contract Documents.

C. Lubricate bearings, adjust belt tension, and change filters.

D. Perform startup checks according to manufacturer's written instructions and do the following:

1. Fill out manufacturer's checklists.
2. Check for unobstructed airflow over coils.
3. Check operation of condenser capacity-control device.
4. Verify that vibration isolation devices and flexible connectors dampen vibration transmission to structure.

3.5 DEMONSTRATION

A. Engage a factory-authorized service representative to train Owner's maintenance personnel to adjust, operate, and maintain units.

1. Train Owner's maintenance personnel on procedures and schedules for starting and stopping, troubleshooting, servicing, and maintaining units.
2. Review data in maintenance manuals.
3. Schedule training with Owner, through Architect, with at least seven days advance notice.

END OF SECTION

SECTION 15767
PROPELLER UNIT HEATERS

PART 1 - GENERAL

1.1 RELATED DOCUMENTS

A. Drawings and general provisions of the Contract, including General and Supplementary Conditions and other Division 1 Specification Sections, apply to this Section.

1.2 SUMMARY

A. This Section includes propeller unit heaters with electric-resistance coils.

1.3 SUBMITTALS

A. Product Data: Include rated capacities, operating characteristics, furnished specialties, and accessories for each unit type and configuration.

B. Shop Drawings: Submit the following for each unit type and configuration:

1. Plans, elevations, sections, and details.
2. Details of anchorages and attachments to structure and to supported equipment.
3. Wiring Diagrams: Power, signal, and control wiring.
4. Equipment schedules to include rated capacities, operating characteristics, furnished specialties, and accessories.

C. Field quality-control test reports.

D. Operation and Maintenance Data: For propeller unit heaters to include in emergency, operation, and maintenance manuals.

1.4 QUALITY ASSURANCE

A. Electrical Components, Devices, and Accessories: Listed and labeled as defined in NFPA 70, Article 100, by a testing agency acceptable to authorities having jurisdiction, and marked for intended use.

PART 2 - PRODUCTS

2.1 MANUFACTURERS

A. Available Manufacturers: Subject to compliance with requirements, manufacturers offering products that may be incorporated into the Work include, but are not limited to, the following:

1. Airtherm; a Mestek Company.
2. Engineered Air Ltd.
3. Trane.

B. Unit heaters shall be as specified on drawings.

2.2 UNIT HEATERS

A. Description: An assembly including casing, coil, fan, and motor in horizontal discharge configuration with adjustable discharge louvers.

B. Comply with UL 2021.

C. Comply with UL 823.

2.3 CASING

A. Cabinet: Removable panels for maintenance access to controls.

B. Cabinet Finish: Manufacturer's standard baked enamel applied to factory-assembled and -tested propeller unit heater before shipping.

C. Discharge Louver: Adjustable fin diffuser for horizontal units and conical diffuser for vertical units.

2.4 ELECTRIC-RESISTANCE HEATING ELEMENTS

A. Nickel-chromium heating wire, free from expansion noise and 60-Hz hum, embedded in magnesium oxide refractory and sealed in steel or corrosion-resistant metallic sheath with fins no closer than 0.16 inch (4 mm). Element ends shall be enclosed in terminal box. Fin surface temperature shall not exceed 550 deg F (288 deg C) at any point during normal operation.

1. Circuit Protection: One-time fuses in terminal box for overcurrent protection and limit controls for high-temperature protection of heaters.
2. Wiring Terminations: Stainless-steel or corrosion-resistant material.

2.5 FAN

A. Propeller type, aluminum wheel directly mounted on motor shaft in the fan venturi.

2.6 FAN MOTORS

A. Comply with requirements in Division 15 Section "Motors."

B. Motor Type: Permanently lubricated, multispeed.

2.7 CONTROLS

A. Control Devices:

1. Wall-mounting thermostat.

PART 3 - EXECUTION

3.1 EXAMINATION

A. Examine areas to receive propeller unit heaters for compliance with requirements for installation tolerances and other conditions affecting performance.

B. Examine roughing-in for piping and electrical connections to verify actual locations before propeller unit-heater installation.

C. Proceed with installation only after unsatisfactory conditions have been corrected.

3.2 INSTALLATION

A. Install propeller unit heaters level and plumb.

B. Install propeller unit heaters to comply with NFPA 90A.

C. Suspend propeller unit heaters from structure with all-thread hanger rods and elastomeric hangers.

D. Install wall-mounting thermostats and switch controls in electrical outlet boxes at heights to match lighting controls.

3.3 CONNECTIONS

A. Piping installation requirements are specified in other Division 15 Sections. Drawings indicate general arrangement of piping, fittings, and specialties.

B. Install piping adjacent to machine to allow service and maintenance.

C. Ground equipment according to Division 16 Section "Grounding and Bonding."

D. Connect wiring according to Division 16 Section "Conductors and Cables."

3.4 FIELD QUALITY CONTROL

A. Testing: Perform the following field quality-control testing and report results in writing:

1. After electrical circuitry has been energized, start units to confirm proper motor rotation and unit operation.
2. Operate electric heating elements through each stage to verify proper operation and electrical connections.
3. Test and adjust controls and safeties.

B. Remove and replace malfunctioning units and retest as specified above.

3.5 DEMONSTRATION

A. Engage a factory-authorized service representative to train Owner's maintenance personnel to adjust, operate, and maintain propeller unit heaters. Refer to Division 1 Section "Demonstration and Training."

END OF SECTION

SECTION 15838
EXHAUST FAN

PART 1- GENERAL

1.1 SUMMARY

A. Contractor shall provide and install a side wall mounted, direct drive, outside mounted, exhaust fan in the building as described herein and as show on the contract plans.

1.2 SUBMITTALS

A. Submittals shall be in accordance with Division 1.

B. Provide dimensional drawings and product data on each fan.

C. Provide fan curves for each fan at the specified operation point, with the flow, static pressure and horsepower clearly plotted.

D. Provide outlet velocity and fan's inlet sound power readings for the eight octave bands, decibels, and sones.

E. Strictly adhere to QUALITY ASSURANCE requirements as stated in section 1.04 of this specification.

F. Provide manufacturer's certification that exhaust fans are licensed to bear Air Movement and Control Association (AMCA), Certified Rating Seal for sound and air performance.

G. Installation, Operation, and Maintenance Manual (IOM): Provide manufacturer's installation, operations, and maintenance manual, including instructions on installation, operations, maintenance, pulley adjustment, receiving, handling, storage, safety information and cleaning. A troubleshooting guide, parts list, warranty and electrical wiring diagrams.

1.3 QUALITY ASSURANCE

A. Performance ratings: Conform to AMCA standard 211 and 311. Fans must be tested in accordance with ANSI/AMCA Standard 210-99 and AMCA Standard 300-96 in an AMCA accredited laboratory. Fans shall be certified to bear the AMCA label for air performance seal.

B. Classification for Spark Resistant Construction, levels A, B and C, conform to AMCA 99.

C. Each fan shall be given a balancing analysis which is applied to wheels at the outside radius. The maximum allowable static and dynamic imbalance is 0.05 ounces (Balance grade of G6.3).

D. Comply with the National Electrical Manufacturers Association (NEMA), standards for motors and electrical accessories.

1.4 DELIVERY, STORAGE, AND HANDLING

A. Delivery: Deliver materials to site in manufacturer's original, unopened containers and packaging, with labels clearly indicating manufacturer, material, products included, and location of installation.

B. Storage: Store materials in a dry area indoor, protected from damage, and in accordance with manufacturer's instructions. For long term storage follow manufacturer's Installation, Operations, and Maintenance Manual.

C. Handling: Handle and lift fans in accordance with the manufacturer's instructions. Protect materials and finishes during handling and installation to prevent damage. Follow all safety warnings posted by the manufacturer.

1.5 WARRANTY

A. Warranty shall be in accordance with Specification Division 1.

B. Any such defects, which occur within the stipulated guaranty period, shall be repaired, replaced, or made good at no cost to the Owner.

1.6 OPERATION AND MAINTENANCE MANUALS

A. Provide operation and Maintenance Manuals in accordance with Specification Division 1.

B. Operation and maintenance manuals shall be provided by manufacturer at least two weeks prior to shipment of major equipment components. Each manual shall be a bound, indexed binder with drawings and parts lists prepared specifically for this project rather than general instructions that are not designed for this project.

PART 2- PRODUCTS

2.1 MANUFACTURER

A. Greenheck, PO Box 410, Schofield, Wisconsin 54476 or approved equal.

2.2 DIRECT DRIVE SIDEWALL MOUNTED CENTRIFUGAL EXHAUST FAN

A. Exhaust Fan shall be a Greenheck side wall mounted, direct drive, outside mounted, model CW vari-green exhaust fan as specified on the project drawings.

B. General Description:

1. Discharge air directly away from the mounting surface.
2. Sidewall mounted applications.
3. Each fan shall bear a permanently affixed manufacture's engraved metal nameplate containing the model number and individual serial number.

C. Wheel

1. Material type: aluminum.
2. Non-overloading, backward inclined centrifugal.
3. Statically and dynamically balanced in accordance to AMCA Standard 204-05.
4. The wheel cone and fan inlet will be matched and shall have precise running tolerances for maximum performance and operating efficiency.

D. Motors

1. Electronically Commutated Motor

   a. Motor enclosures: Open type.
   b. Motor to be a DC electronic commutation type motor (ECM) specifically designed for fan applications. AC induction type motors are not acceptable. Examples of unacceptable motors are: Shaded Pole, Permanent Split Capacitor (PSC), Split Phase, Capacitor Start and 3 phase induction type motors.
   c. Motors are permanently lubricated, heavy duty ball bearing type to match with the fan load and pre-wired to the specific voltage and phase.
   d. Internal motor circuitry to convert AC power supplied to the fan to DC.
   e. Motor shall be speed controllable down to 20% of full speed (80% turndown).
   f. Motor shall be a minimum of 85% efficient at all speeds.

E. Housing

1. Constructed of heavy gauge aluminum includes exterior housing, windband, and motor compartment housing. Galvanized material is not acceptable.
2. Housing shall have a rigid internal support structure.
3. Windband to be one piece uniquely spun aluminum construction and maintain original material thickness throughout the housing.
4. Windband to include a integral rolled bead for strength.
5. Breather tube shall be 10 square inches in size for fresh air motor cooling, and designed to allow wiring to be run through it.
6. Leak resistant.
7. Continuously welded seams.
8. Steel mounting plate and integral venturi shall be attached to windband.

F. Motor Cover

1. Constructed of aluminum.

G. Vibration Isolation

1. Sized to match the weight of each fan.

H. Disconnect Switches

1. NEMA rated: 12.

2. Positive electrical shut-off.
3. Wired from fan motor to junction box installed within motor compartment.

I. Drain Trough

1. Allows for one-point drainage of water, grease, and other residues.

J. Options/Accessories

1. Birdscreen

a. Construction material: Aluminum.
b. Protects fan discharge.

2. Dampers

a. Type: Gravity.
b. Prevents outside air from entering back into the building when fan is off.
c. Balanced for minimal resistance to flow.
d. Galvanized frames with pre-punched mounting holes.

3. Finishes

a. Types: Hi-Pro Polyester.

4. Wall Grille

a. Aluminum louvered grille that mounts on the interior wall over the wall opening.

K. Control

1. See drawings for sequence of operation.

PART 3- EXECUTION

3.1 MANUFACTURER'S INSTRUCTIONS

A. Comply with manufacturer's product data, including technical bulletins, product catalog installation instructions.

3.2 EXAMINATION

A. Examine areas to receive fans. Notify the Engineer of conditions that would adversely affect installation or subsequent utilization and maintenance of fans. Do not proceed with installation until unsatisfactory conditions are corrected.

3.3 INSTALLATION

A. Install fans system as indicated on the Installation, Operation and Maintenance Manual (IOM) and contract drawings.

B. Install fans in accordance with manufacturer's instructions.

3.4 SYSTEM STARTUP

A. CONTRACTOR shall provide an authorized manufacturer's representative to startup and inspect the fan installation and provide training on the operation and maintenance.

B. Manufacturer's representative shall provide written certification that equipment is correctly installed, with all specified and required components, and that each is capable of meeting the specified performance requirements. This written certification shall be submitted to the ENGINEER prior to putting the equipment in operation.

3.5 CLEANING

A. Clean as recommended by manufacturer. Do not use material or methods which may damage finish surface or surrounding construction.

3.6 PROTECTION

A. Protect installed product and finished surfaces from damage during construction.

B. Protect installed exhaust fans to ensure that, except for normal weathering, fans will be without damage or deterioration at time of substantial completion.

END OF SECTION

SECTION 15856
COMBINATION LOUVER DAMPER

PART 1 - GENERAL

1.1 SUMMARY

A. This Section includes the furnishing and installing of a combination louver/damper with damper motor.

1.2 DEFINITIONS

A. Louver Terminology: Definitions of terms for metal louvers contained in AMCA 501 apply to this Section unless otherwise defined in this Section or in referenced standards.

B. Drainable-Blade Louver: Louver with blades having gutters that collect water and drain it to channels in jambs and mullions, which carry it to bottom of unit and away from opening.

1.3 SUBMITTALS

A. Submittals shall be in accordance with Division 1.

B. Product Data: For each type of product indicated, include printed catalog pages showing specified models with appropriate AMCA Certified Ratings Seals.

C. Shop Drawings: For louvers and accessories. Include plans, elevations, sections, details, and attachments to other Work. Show blade profiles, angles, and spacing.

D. Wiring Diagrams: Power, signal, and control wiring for motorized adjustable louvers.

E. Samples for Initial Selection: For units with factory-applied color finishes.

1.4 OPERATION and MAINTENANCE DATA

A. Operation and Maintenance Data shall be in accordance with Division 1.

1.5 QUALITY ASSURANCE

A. Source Limitations

1. Obtain louvers through one source from a single manufacturer where indicated to be of same type, design, or factory-applied color finish.

B. SMACNA Standard

1. Comply with recommendations in SMACNA's "Architectural Sheet Metal Manual" for fabrication, construction details, and installation procedures.

C. UL and NEMA Compliance

1. Provide motors and related components for motor-operated adjustable louvers that are listed and labeled by UL and comply with applicable NEMA standards.

PART 2 - PRODUCTS

2.1 MANUFACTURER

A. Louvers shall be model EACC-601 as manufactured by Greenheck or approved equal.

2.2 PERFORMANCE REQUIREMENTS

A. Structural Performance

1. Provide louvers capable of withstanding the effects of gravity loads and the following loads and stresses within limits and under conditions indicated without permanent deformation of louver components, noise or metal fatigue caused by louver blade rattle or flutter, or permanent damage to fasteners and anchors. Wind pressures shall be considered to act on vertical projection of louvers.

B. Wind Loads

1. Determine loads based on a uniform pressure of 20 lbf/sq. ft., acting inward or outward.

C. Thermal Movements

1. Provide louvers that allow for thermal movements resulting from the following maximum change (range) in ambient and surface temperatures by preventing buckling, opening of joints, overstressing of components, failure of connections, and other detrimental effects. Base engineering calculation on surface temperatures of materials due to both solar heat gain and nighttime-sky heat loss.

2. Temperature Change (Range): 0 deg F, ambient; 180 deg F, material surfaces.

D. Air-Performance, Water-Penetration, Air-Leakage, and Wind-Driven Rain Ratings

1. Free area for size 48 inch x 48 inch louver shall not be less than 6.20 square feet (38.8%).

2. Airflow resistance at 1000 feet per minute free area intake velocity shall not be greater than 0.12 inch water gauge pressure drop.

3. Airflow resistance at 1000 feet per minute free area exhaust velocity shall not be greater than 0.16 inch water gauge pressure drop.

4. Beginning point of water penetration shall not be less than 1020 feet per minute free area intake velocity.

5. Air leakage (when operable damper blades are in the closed position) shall not be greater than 3.9 cubic feet per minute at 0.20 inch water gauge static pressure.

6. Provide louvers complying with performance requirements indicated, as demonstrated by testing manufacturer's stock units identical to those provided, except for length and width according to AMCA 500-L.

2.3 CONSTRUCTION REQUIREMENTS

A. Louver frame shall be as follows:

1. Pre-cast Building: 4 inches deep channel style with 0.125 inch extruded aluminum wall thickness.

2. CMU Block Building: 6 inches deep channel style with 0.125 inch extruded aluminum wall thickness.

B. Concealed actuator compartment shall consist of 0.125 inch extruded aluminum wall thickness flat sill member and 0.100 inch thickness formed aluminum enclosure with a 0.080 inch thickness aluminum rear cover plate. Rear cover plate shall have neoprene seal.

C. Stationary front blades shall be drainable style located on 6 inch centers and 45 degree angles with 0.081 inch extruded aluminum wall thickness.

D. Operable rear blades shall be center pivot style with 0.081 inch extruded aluminum wall thickness.

E. Jamb seals shall be compressible style stainless steel.

F. Blade seals shall be dual-durometer extruded vinyl style.

G. Blade linkage shall be out of airstream and concealed within frame. Blade axles shall be 0.5 inch diagonal zinc plated steel. Axle bearings shall be synthetic sleeve type.

H. Bird screen shall internally mounted 0.75 inch x 0.051 inch flattened expanded aluminum.

I. Louver shall have a flange frame.

J. Fasteners

1. Of same basic metal and alloy as fastened metal or 300 Series stainless steel, unless otherwise indicated. Do not use metals that are incompatible with joined materials. Use types and sizes to suit unit installation conditions.

2. Postinstalled Fasteners for Concrete and Masonry: Torque-controlled expansion anchors, made from stainless-steel components, with capability to sustain, without failure, a load equal to 4 times the loads imposed, for concrete, or 6 times the load imposed, for masonry, as determined by testing per ASTM E 488, conducted by a qualified independent testing agency.

2.4 FINISH

A. Louver shall have a 70% Kynar Paint (AAMA 2605). Color shall be chosen by the Owner

B. Comply with NAAMM's "Metal Finishes Manual for Architectural and Metal Products" for recommendations for applying and designating finishes.

C. Finish louvers and ventilators after assembly.

2.5 DAMPER ACTUATOR

A. Louver shall be opened and closed by a 120 volt damper motor installed in the actuator compartment.

B. Damper actuator shall be furnished and installed by the louver manufacturer as part of the louver assembly. Field installation of the damper actuator is not allowed.

C. Damper actuator shall be sized by the Louver manufacturer to satisfy all operating conditions.

PART 3 - EXECUTION

3.1 INSTALLATION

A. Louvers shall be installed in accordance with manufacturer's installation instructions.

B. All fasteners to structure shall be with stainless steel fasteners.

C. Locate and place louvers and vents level, plumb, and at indicated alignment with adjacent work.

D. Provide perimeter reveals and openings of uniform width for sealants and joint fillers, as indicated.

E. Repair finishes damaged by cutting, welding, soldering, and grinding. Restore finishes so no evidence remains of corrective work. Return items that cannot be refinished in the field to the factory, make required alterations, and refinish entire unit or provide new units.

F. Protect galvanized and nonferrous-metal surfaces from corrosion or galvanic action by applying a heavy coating of bituminous paint on surfaces that will be in contact with concrete, masonry, or dissimilar metals.

G. Install concealed gaskets, flashings, joint fillers, and insulation as louver installation progresses, where weathertight louver joints are required.

3.2 ADJUSTING AND CLEANING

A. Test operation of adjustable louvers and adjust as needed to produce fully functioning units that comply with requirements.

B. Clean exposed surfaces of louvers and vents that are not protected by temporary covering, to remove fingerprints and soil during construction period. Do not let soil accumulate until final cleaning.

C. Before final inspection, clean exposed surfaces with water and a mild soap or detergent not harmful to finishes. Thoroughly rinse surfaces and dry.

D. Restore louvers and vents damaged during installation and construction so no evidence remains of corrective work. If results of restoration are unsuccessful, as determined by Architect, remove damaged units and replace with new units.

E. Touch up minor abrasions in finishes with air-dried coating that matches color and gloss of, and is compatible with, factory-applied finish coating.

END OF SECTION

SECTION 15010P
BASIC PLUMBING REQUIREMENTS

PART 1 - GENERAL

1.1 RELATED DOCUMENTS

A. Drawings and general provisions of Contract, including General and Supplementary Conditions and Division 1 Specification Sections, apply to this and the other sections of Division 15P.

1.2 SUMMARY

A. This Section includes general administrative and procedural requirements for mechanical installations. The following administrative and procedural requirements are included in this Section to expand the requirements specified in Division 1:

1. Submittals.
2. Coordination Drawings
3. Record documents.
4. Maintenance manuals.
5. Rough-ins.
6. Mechanical installations.
7. Cutting and patching.

B. Related Sections: The following sections contain requirements that relate to this section:

1. Division 15P for materials and methods common to the remainder of Division 15P, plus general related specifications including:

   a. Access to plumbing installations.
   b. Excavation for plumbing installations within the building boundaries, and from building to utilities connections.

1.3 SUBMITTALS

A. General: Follow the procedures specified in Division 1.

B. Increase, by the quantity listed below, the number of plumbing related shop drawings, product data, and samples submitted, to allow for required distribution plus two copies of each submittal required, which will be retained by the Mechanical Consulting Engineer.

1. Product Data: 1 additional copy of each item.
2. Samples: 1 addition as set.

C. Additional copies may be required by individual sections of these Specifications.

1.4 RECORD DOCUMENTS

A. Prepare record documents that indicate the following installed conditions:

1. Mains and branches of piping systems, with valves and control devices located and numbered, concealed unions located, and with items requiring maintenance located (i.e., traps, strainers, water hammer arresters, tanks, etc.). Valve location diagrams, complete with valve tag chart. Refer to Division 15P. Indicate actual inverts and horizontal locations of underground piping.
2. Equipment locations (exposed and concealed), dimensioned from prominent building lines.
3. Approved substitutions, Contract Modifications, and actual equipment and materials installed.
4. Contract Modifications, actual equipment and materials installed.

1.5 MAINTENANCE MANUALS

A. Prepare maintenance manuals and include the following Information for equipment items. No faxed copies of any kind will be allowed in maintenance manuals, all copies shall be original.

1. Description of function, normal operating characteristics and limitations, performance curves, engineering data and tests, and complete nomenclature and commercial numbers of replacement parts.
2. Manufacturer's printed operating procedures to include start-up, break-in, and routine and normal operating instructions; regulation, control, stopping, shutdown, and emergency instructions; and summer and winter operating instructions.
3. Maintenance procedures for routine preventative maintenance and troubleshooting; disassembly, repair, and reassembly; aligning and adjusting instructions.
4. Servicing instructions and lubrication charts and schedules.

1.6 DELIVERY, STORAGE, AND HANDLING

A. Deliver products to the project properly identified with names, model numbers, types, grades, compliance labels, and other information needed for identification.

PART 2 - PRODUCTS (Not Applicable)

PART 3 – EXECUTION

3.1 ROUGH-IN

A. Verify final locations for rough-ins with field measurements and with the requirements of the actual equipment to be connected.

B. Refer to equipment specifications in Divisions 2 through 16 for rough-in requirements.

3.2 PLUMBING INSTALLATIONS

A. General: Sequence, coordinate, and integrate the various elements of plumbing systems, materials, and equipment. Comply with the following requirements:

1. Coordinate plumbing systems, equipment, and materials installation with other building components.
2. Verify all dimensions by field measurements.
3. Arrange for chases, slots, and openings in other building components during progress of construction, to allow for plumbing installations.
4. Coordinate the installation of required supporting devices and sleeves to be set in poured-in-place concrete and other structural components, as they are constructed.
5. Sequence, coordinate, and integrate installations of plumbing materials and equipment for efficient flow of the Work. Give particular attention to large equipment requiring positioning prior to closing in the building.
6. Where mounting heights are not detailed or dimensioned, install systems, materials, and equipment to provide the maximum headroom possible.
7. Coordinate connection of plumbing systems with exterior underground and overhead utilities and services. Comply with requirements of governing regulations. Provide required connection for each service.
8. Install systems, materials, and equipment to conform with approved submittal data, including coordination drawings, to greatest extent possible. Conform to arrangements indicated by the Contract Documents, recognizing that portions of the Work are shown only in diagrammatic form. Where coordination requirements conflict with individual system requirements, refer conflict to the Architect.
9. Install systems, materials, and equipment level and plumb, parallel and perpendicular to other building systems and components, where installed exposed in finished spaces.
10. Install plumbing equipment to facilitate servicing, maintenance, and repair or replacement of equipment components. As much as practical, connect equipment for ease of disconnecting, with minimum of interference with other installations.
11. Install systems, materials, and equipment giving right-of-way priority to systems required to be installed at a specified slope.
12. Subcontractor Completion shall be as coordinated by the General Contractor. The Plumbing Contractor is responsible for his subcontractors, and his vendor supplied equipment per the schedule of the project. All subcontractor warranty for labor and equipment shall begin upon final acceptance by the Owner of the Plumbing Contractor's work. The Plumbing Contractor is therefore responsible to warranty all

labor and equipment whether provided by the Plumbing Contractor or his subcontractors for a period of one year from a final acceptance by the Owner.

END OF SECTION

SECTION 15083P
PLUMBING INSULATION

PART 1 - GENERAL

1.1 SUMMARY

A. This Section includes preformed, rigid and flexible pipe insulation; insulating cements; field-applied jackets; accessories and attachments; and sealing compounds.

1.2 SUBMITTALS

A. Product Data: Identify thermal conductivity, thickness, and jackets (both factory and field applied, if any), for each type of product indicated.

B. Shop Drawings: Show fabrication and installation details for the following:

1. Application of protective shields, saddles, and inserts at pipe hangers for each type of insulation and hanger.
2. Attachment and covering of heat trace inside insulation.
3. Insulation application at pipe expansion joints for each type of insulation.
4. Insulation application at elbows, fittings, flanges, valves, and specialties for each type of insulation.
5. Removable insulation at piping specialties and equipment connections.
6. Application of field-applied jackets.

C. Samples: For each type of insulation and jacket. Identify each Sample, describing product and intended use. Submit Samples in the following sizes:

1. Preformed Pipe Insulation Materials: 12 inches long by NPS 2.

D. Material Test Reports: From a qualified testing agency acceptable to authorities having jurisdiction indicating, interpreting, and certifying test results for compliance of insulation materials, sealers, attachments, cements, and jackets with requirements indicated. Include dates of tests.

E. Installer Certificates: Signed by the Contractor certifying that installers comply with requirements.

1.3 QUALITY ASSURANCE

A. Installer Qualifications: Skilled mechanics who have successfully completed an apprenticeship program or another craft training program certified by the U.S. Department of Labor, Bureau of Apprenticeship and Training.

B. Fire-Test-Response Characteristics: As determined by testing materials identical to those specified in this Section according to ASTM E 84, by a testing and inspecting agency acceptable to authorities having jurisdiction. Factory label insulation and jacket materials and sealer and cement material containers with appropriate markings of applicable testing and inspecting agency.

1. Insulation Installed Indoors: Flame-spread rating of 25 or less, and smoke-developed rating of 50 or less.
2. Insulation Installed Outdoors: Flame-spread rating of 75 or less, and smoke-developed rating of 150 or less.

1.4 DELIVERY, STORAGE, AND HANDLING

A. Packaging: Ship insulation materials in containers marked by manufacturer with appropriate ASTM specification designation, type and grade, and maximum use temperature.

1.5 COORDINATION

A. Coordinate size and location of supports, hangers, and insulation shields specified in Division 15.

B. Coordinate clearance requirements with piping Installer for insulation application.

C. Coordinate installation and testing of steam or electric heat tracing.

1.6 SCHEDULING

A. Schedule insulation application after testing piping systems and, where required, after installing and testing heat-trace tape. Insulation application may begin on segments of piping that have satisfactory test results.

PART 2 - PRODUCTS

2.1 MANUFACTURERS

A. Manufacturers: Subject to compliance with requirements, provide products by one of the following:

1. Glass-Fiber Insulation:

a. CertainTeed Manson.
b. Owens-Corning Fiberglas Corp.

2.2 INSULATION MATERIALS

A. Glass-Fiber Insulation: Glass fibers bonded with a thermosetting resin complying with the following:

1. Preformed Pipe Insulation: Comply with ASTM C 547, Type 1, with factory-applied, all-purpose, vapor-retarder jacket.
2. Fire-Resistant Adhesive: Comply with MIL-A-3316C in the following classes and grades:

   a. Class 1, Grade A for bonding glass cloth and tape to unfaced glass-fiber insulation, for sealing edges of glass-fiber insulation, and for bonding lagging cloth to unfaced glass-fiber insulation.
   b. Class 2, Grade A for bonding glass-fiber insulation to metal surfaces.

3. Vapor-Retarder Mastics: Fire- and water-resistant, vapor-retarder mastic for indoor applications. Comply with MIL-C-19565C, Type II.
4. Glass-Fiber Insulating Cements: Comply with ASTM C 195.
5. Expanded or Exfoliated Vermiculite Insulating Cements: Comply with ASTM C 196.
6. Glass-Fiber, Hydraulic-Setting Insulating and Finishing Cement: Comply with ASTM C 449/C 449M.

B. Prefabricated Thermal Insulating Fitting Covers: Comply with ASTM C 450 for dimensions used in preforming insulation to cover valves, elbows, tees, and flanges.

2.3 FIELD-APPLIED JACKETS

A. General: ASTM C 921, Type 1, unless otherwise indicated.

B. Standard PVC Fitting Covers: Factory-fabricated fitting covers manufactured from 20-mil- thick, high-impact, ultraviolet-resistant PVC.

1. Shapes: 45- and 90-degree, short- and long-radius elbows, tees, valves, flanges, reducers, end caps, soil-pipe hubs, traps, mechanical joints, and P-trap and supply covers for lavatories for the disabled.
2. Adhesive: As recommended by insulation material manufacturer.

C. PVC Jacket: High-impact, ultraviolet-resistant PVC; 20 mils thick; roll stock ready for shop or field cutting and forming.

1. Adhesive: As recommended by insulation material manufacturer.
2. PVC Jacket Color: White or gray.
3. PVC Jacket Color: Color-code piping jackets based on materials contained within the piping system.

2.4 VAPOR RETARDERS

A. Mastics: Materials recommended by insulation material manufacturer that are compatible with insulation materials, jackets, and substrates.

PART 3 - EXECUTION

3.1 EXAMINATION

A. Examine substrates and conditions for compliance with requirements for installation and other conditions affecting performance of insulation application.

B. Proceed with installation only after unsatisfactory conditions have been corrected.

3.2 PREPARATION

A. Surface Preparation: Clean and dry pipe and fitting surfaces. Remove materials that will adversely affect insulation application.

3.3 GENERAL APPLICATION REQUIREMENTS

A. Apply insulation materials, accessories, and finishes according to the manufacturer's written instructions; with smooth, straight, and even surfaces; free of voids throughout the length of piping, including fittings, valves, and specialties.

B. Refer to schedules at the end of this Section for materials, forms, jackets, and thicknesses required for each piping system.

C. Use accessories compatible with insulation materials and suitable for the service. Use accessories that do not corrode, soften, or otherwise attack insulation or jacket in either wet or dry state.

D. Apply insulation with longitudinal seams at top and bottom of horizontal pipe runs.

E. Apply multiple layers of insulation with longitudinal and end seams staggered.

F. Do not weld brackets, clips, or other attachment devices to piping, fittings, and specialties.

G. Seal joints and seams with vapor-retarder mastic on insulation indicated to receive a vapor retarder.

H. Keep insulation materials dry during application and finishing.

I. Apply insulation with tight longitudinal seams and end joints. Bond seams and joints with adhesive recommended by the insulation material manufacturer.

J. Apply insulation with the least number of joints practical.

K. Apply insulation over fittings, valves, and specialties, with continuous thermal and vapor-retarder integrity, unless otherwise indicated. Refer to special instructions for applying insulation over fittings, valves, and specialties.

L. Hangers and Anchors: Where vapor retarder is indicated, seal penetrations in insulation at hangers, supports, anchors, and other projections with vapor-retarder mastic.

1. Apply insulation continuously through hangers and around anchor attachments.
2. For insulation application where vapor retarders are indicated, extend insulation on anchor legs at least 12 inches from point of attachment to pipe and taper insulation ends. Seal tapered ends with a compound recommended by the insulation material manufacturer to maintain vapor retarder.
3. Install insert materials and apply insulation to tightly join the insert. Seal insulation to insulation inserts with adhesive or sealing compound recommended by the insulation material manufacturer.
4. Cover inserts with jacket material matching adjacent pipe insulation. Install shields over jacket, arranged to protect the jacket from tear or puncture by the hanger, support, and shield.

M. Insulation Terminations: For insulation application where vapor retarders are indicated, taper insulation ends. Seal tapered ends with a compound recommended by the insulation material manufacturer to maintain vapor retarder.

N. Apply adhesives and mastics at the manufacturer's recommended coverage rate.

O. Apply insulation with integral jackets as follows:

1. Pull jacket tight and smooth.
2. Circumferential Joints: Cover with 3-inch-wide strips, of same material as insulation jacket. Secure strips with adhesive and outward clinching staples along both edges of strip and spaced 4 inches o.c.
3. Longitudinal Seams: Overlap jacket seams at least 1-1/2 inches. Apply insulation with longitudinal seams at bottom of pipe. Clean and dry surface to receive self-sealing lap. Staple laps with outward clinching staples along edge at 4 inches o.c.

   a. Exception: Do not staple longitudinal laps on insulation having a vapor retarder.

4. Vapor-Retarder Mastics: Where vapor retarders are indicated, apply mastic on seams and joints and at ends adjacent to flanges, unions, valves, and fittings.
5. At penetrations in jackets for thermometers and pressure gages, fill and seal voids with vapor-retarder mastic.

P. Roof Penetrations: Apply insulation for interior applications to a point even with top of roof flashing.

1. Seal penetrations with vapor-retarder mastic.
2. Apply insulation for exterior applications tightly joined to interior insulation ends.
3. Extend metal jacket of exterior insulation outside roof flashing at least 2 inches below top of roof flashing.
4. Seal metal jacket to roof flashing with vapor-retarder mastic.

Q. Exterior Wall Penetrations: For penetrations of below-grade exterior walls, terminate insulation flush with mechanical sleeve seal. Seal terminations with vapor-retarder mastic.

R. Interior Wall and Partition Penetrations: Apply insulation continuously through walls and floors.

S. Fire-Rated Wall and Partition Penetrations: Apply insulation continuously through penetrations of fire-rated walls and partitions.

T. Floor Penetrations: Apply insulation continuously through floor assembly.

1. For insulation with vapor retarders, seal insulation with vapor-retarder mastic where floor supports penetrate vapor retarder.

3.4 GLASS-FIBER INSULATION APPLICATION

A. Apply insulation to straight pipes and tubes as follows:

1. Secure each layer of preformed pipe insulation to pipe with wire, tape, or bands without deforming insulation materials.
2. Where vapor retarders are indicated, seal longitudinal seams and end joints with vapor-retarder mastic. Apply vapor retarder to ends of insulation at intervals of 15 to 20 feet to form a vapor retarder between pipe insulation segments.
3. For insulation with factory-applied jackets, secure laps with outward clinched staples at 6 inches o.c.
4. For insulation with factory-applied jackets with vapor retarders, do not staple longitudinal tabs but secure tabs with additional adhesive as recommended by the insulation material manufacturer and seal with vapor-retarder mastic.

B. Apply insulation to fittings and elbows as follows:

1. Apply premolded insulation sections of the same material as straight segments of pipe insulation when available. Secure according to manufacturer's written instructions.

2. When premolded insulation elbows and fittings are not available, apply mitered sections of pipe insulation, or glass-fiber blanket insulation, to a thickness equal to adjoining pipe insulation. Secure insulation materials with wire, tape, or bands.
3. Cover fittings with standard PVC fitting covers.

C. Apply insulation to valves and specialties as follows:

1. Apply premolded insulation sections of the same material as straight segments of pipe insulation when available. Secure according to manufacturer's written instructions.
2. When premolded insulation sections are not available, apply glass-fiber blanket insulation to valve body. Arrange insulation to permit access to packing and to allow valve operation without disturbing insulation. For check valves, arrange insulation for access to stainer basket without disturbing insulation.
3. Apply insulation to flanges as specified for flange insulation application.
4. Use preformed standard PVC fitting covers for valve sizes where available. Secure fitting covers with manufacturer's attachments and accessories. Seal seams with tape and vapor-retarder mastic.
5. For larger sizes where PVC fitting covers are not available, seal insulation with canvas jacket and sealing compound recommended by the insulation material manufacturer.

3.5 FIELD-APPLIED JACKET APPLICATION

A. Apply PVC jacket where indicated, with 1-inch overlap at longitudinal seams and end joints. Seal with manufacturer's recommended adhesive.

3.6 PIPING SYSTEM APPLICATIONS

A. Insulation materials and thicknesses are specified in schedules at the end of this Section.

B. Items Not Insulated: Unless otherwise indicated, do not apply insulation to the following systems, materials, and equipment:

1. Flexible connectors.
2. Vibration-control devices.
3. Fire-suppression piping.
4. Drainage piping located in crawl spaces, unless otherwise indicated.
5. Below-grade piping, unless otherwise indicated.
6. Chrome-plated pipes and fittings, unless potential for personnel injury.
7. Air chambers, unions, strainers, check valves, plug valves, and flow regulators.

3.7 FIELD QUALITY CONTROL

A. Inspection: Perform the following field quality-control inspections, after installing insulation materials, jackets, and finishes, to determine compliance with requirements:

1. Inspect fittings and valves randomly selected by Architect.
2. Remove fitting covers from 20 elbows or 1 percent of elbows, whichever is less, for various pipe sizes.
3. Remove fitting covers from 20 valves or 1 percent of valves, whichever is less, for various pipe sizes.

B. Insulation applications will be considered defective if sample inspection reveals noncompliance with requirements. Remove defective Work and replace with new materials according to these Specifications.

C. Reinstall insulation and covers on fittings and valves uncovered for inspection according to these Specifications.

3.8 INSULATION APPLICATION SCHEDULE, GENERAL

A. Refer to insulation application schedules for required insulation materials, vapor retarders, and field-applied jackets.

B. Application schedules identify piping system and indicate pipe size ranges and material, thickness, and jacket requirements.

3.9 INTERIOR INSULATION APPLICATION SCHEDULE

A. Service: Domestic cold water piping in concealed spaces

1. Operating Temperature: 35 to 140 deg F.
2. Insulation Material: Glass fiber.
3. Insulation Thickness: Apply the following insulation thicknesses:

    a. Copper Pipe, ½ to 3": 1"

4. Field-Applied Jacket: None.
5. Vapor Retarder Required: Yes.
6. Finish: None.

B. Service: Domestic cold water piping in exposed spaces.

1. Operating Temperature: 35 to 140 deg F.
2. Insulation Material: Glass-fiber, with jacket.
3. Insulation Thickness: Apply the following insulation thicknesses:

    a. Copper Pipe, ½ to 3": 1"

b. Copper Pipe, 4" to 6": 2"

4. Field-Applied Jacket: PVC.
5. Vapor Retarder Required: Yes.
6. Finish: Painted.

C. Service: Exposed sanitary drains and domestic water supplies and stops for fixtures for the disabled.

1. Operating Temperature: 35 to 120 deg F.
2. Insulation: Factory fabricated PVC covers for p-traps and supplies.

END OF SECTION

SECTION 15100P
PLUMBING VALVES

PART 1 - GENERAL

1.1 SUMMARY

A. This Section includes general duty valves common to several plumbing piping systems.

1.2 SUBMITTALS

A. General: Submit each item in this Article according to the Conditions of the Contract and Division 1 Specification Sections.

B. Product Data for each valve type. Include body material, valve design, pressure and temperature classification, end connection details, seating materials, trim material and arrangement, dimensions and required clearances, and installation instructions. Include list indicating valve and its application.

C. Maintenance data for valves to include in the operation and maintenance manual specified in Division 1. Include detailed manufacturer's instructions on adjusting, servicing, disassembling, and repairing.

1.3 QUALITY ASSURANCE

A. Single-Source Responsibility: Comply with the requirements specified in Division 1.

B. ASME Compliance: Comply with ASME B31.9 for building services piping and ASME B31.1 for power piping.

C. MSS Compliance: Comply with the various MSS Standard Practice documents referenced.

1.4 DELIVERY, STORAGE, AND HANDLING

A. Prepare valves for shipping as follows:

1. Protect internal parts against rust and corrosion.
2. Protect threads, flange faces, grooves, and weld ends.
3. Set ball valves open to minimize exposure of functional surfaces.
4. Block check valves in either closed or open position.

B. Use the following precautions during storage:

1. Do not remove valve end protectors unless necessary for inspection; then reinstall for storage.
2. Store indoors and maintain valve temperature higher than ambient dew-point temperature. If outdoor storage is necessary, store valves off the ground in watertight enclosures.

PART 2 - PRODUCTS

2.1 MANUFACTURERS

A. Manufacturers: Subject to compliance with requirements, provide products by one of the following:

1. Ball Valves, 1 inch and smaller:

   a. Grinnell Corp
   b. Jenkins
   c. Watts

2. Ball Valves, 1-1/4 inch to 4 inch:

   a. Grinnell Corp
   b. Watts

2.2 BASIC, COMMON VALVE FEATURES

A. Pressure and Temperature Ratings: As indicated in the "Application Schedule" of Part 3 of this Section and as required to suit system pressures and temperatures.

B. Sizes: Same size as upstream pipe, unless otherwise indicated.

C. Operators: Use specified operators and handwheels, except provide the following special operator features:

1. Lever Handles: For quarter-turn valves 6 inches and smaller, except for plug valves, which shall have square heads. Furnish Owner with 1 wrench for every 10 plug valves.

D. Extended Stems: Where insulation is indicated or specified, provide extended stems arranged to receive insulation.

E. Bypass and Drain Connections: Comply with MSS SP-45 bypass and drain connections.

F. End Connections: As indicated in the valve specifications
   1. Threads: Comply with ASME B1.20.1.

2. Solder Joint: Comply with ASME B16.18.
   a. Caution: Where soldered end connections are used, use solder having a melting point below 840 deg F for check valves; below 421 deg F for ball valves.

2.3 BALL VALVES

A. Ball Valves, 1 Inch and Smaller: Rated for 150 psi saturated steam pressure, 400 psi WOG pressure; two-piece construction; with bronze body conforming to ASTM B 62, full port, chrome-plated brass ball, replaceable "Teflon" or "TFE" seats and seals, blowout-proof stem, and vinyl-covered steel handle. Provide solder ends.

B. Ball Valves, 1-1/4-Inch to 4-Inch: Rated for 150 psi saturated steam pressure, 400 psi WOG pressure; 3-piece construction; with bronze body conforming to ASTM B 62, full port, chrome-plated brass ball, replaceable "Teflon" or "TFE" seats and seals, blowout proof stem, and vinyl-covered steel handle. Provide solder ends for 2" and smaller, threaded ends for 2 1/2" and larger.

PART 3 - EXECUTION

3.1 EXAMINATION

A. Prior to valve installation, examine piping system for compliance with requirements for installation tolerances, cleanliness, freedom from foreign materials and proper alignment.

B. Examine valve interior for cleanliness, freedom from foreign matter, and corrosion. Remove special packing materials, such as blocks, used to prevent disc movement during shipping and handling.

C. Operate valves from fully open to fully closed positions. Examine guides and seats made accessible by such operation. Following examination, return the valve closure member to the shipping position

D. Examine threads on valve and mating pipe for form and cleanliness.

E. Replace defective valves with new valves.

3.2 INSTALLATION

A. Install valves as indicated, according to manufacturer's written instructions.

B. Piping installation requirements are specified in other Division 15 Sections. Drawings indicate the general arrangement of piping, fittings, and specialties.

C. Install valves with unions or flanges at each piece of equipment arranged to allow servicing, maintenance, and equipment removal without system shutdown.

D. Locate valves for easy access and provide separate support where necessary. Where possible, locate valves at a maximum of 6' - 0" above finished floor in mechanical spaces.

E. Install valves in horizontal piping with stem at or above the center of the pipe.

F. Install valves in a position to allow full stem movement.

3.3 SOLDERED CONNECTIONS

A. Cut tube square and to exact lengths.

B. Clean end of tube to depth of valve socket with steel wool, sand cloth, or a steel wire brush to a bright finish. Clean valve socket.

C. Apply proper soldering flux in an even coat to inside of valve socket and outside of tube.

D. Remove the cap and disc holder of swing check valves having composition discs.

E. Insert tube into valve socket, making sure the end rests against the shoulder inside valve. Rotate tube or valve slightly to ensure even distribution of the flux.

F. Apply heat evenly to outside of valve around joint until solder melts on contact. Feed solder until it completely fills the joint around tube. Avoid hot spots or overheating valve. Once the solder starts cooling, remove excess amounts around the joint with a cloth or brush.

3.4 THREADED CONNECTIONS

A. Note the internal length of threads in valve ends and proximity of valve internal seat or wall to determine how far pipe should be threaded into valve.

B. Align threads at point of assembly.

C. Apply appropriate tape or thread compound to the external pipe threads, except where dry seal threading is specified.

D. Assemble joint, wrench tight. Wrench on valve shall be on the valve end into which the pipe is being threaded.

3.5 FIELD QUALITY CONTROL

A. Tests: After piping systems have been tested and put into service, but before final adjusting and balancing, inspect valves for leaks. Adjust or replace packing to stop leaks; replace valves if leak persists.

3.6 CLEANING

A. Cleaning: Clean mill scale, grease, and protective coatings from exterior of valves and prepare valves to receive finish painting or insulation.

END OF SECTION

SECTION 16010
GENERAL ELECTRICAL PROVISIONS

PART 1- GENERAL

1.1 RELATED DOCUMENTS

A. The Contract Documents apply to this section.

1.2 SUMMARY

A. Provide necessary items for a complete installation of electrically operated equipment specified in specifications or shown on contract drawings.

B. Arrange equipment substantially as shown on the drawings. Make deviations only where necessary to avoid interference. Check equipment size against available space prior to shipment to avoid interference.

C. Material, equipment, and installation shall meet requirements of applicable codes and standards listed below. Electrical material and equipment shall bear the UL label except where UL does not label such types of material and equipment.

D. Reference to standards are referred to by abbreviation as follows:

1.	Certified Ballasts Mfg	CBM
2.	Electrical Testing Lab	ETL
3.	National Fire Protection Association	NFPA
4.	National Electrical Code (NFPA No. 70)	NEC
5.	Underwriters' Laboratories, Inc	UL
6.	National Electrical Manufacturers' Association	NEMA
7.	Institute of Electrical & Electronics Engineers, Inc	IEEE
8.	Insulated Power Cable Engineers Association	IPCEA
9.	National Electrical Safety Code	NESC
10.	Illuminating Engineering Society	IES
11.	Edison Electric Institute	EEI
12.	Electronic Industries Association	EIA
13.	American Concrete Institute	ACI

14.	American National Standards Institute	ANSI
15.	American Society for Testing and Materials	ASTM
16.	Virginia Statewide Building Code	VAS BC
17.	Association of Edison Illuminating Companies	AEIC

1.3 WARRANTY

A. This contractor will replace, without additional charge, any work or material which develops defects, except from ordinary wear and tear, within one year from date of final acceptance and inspection of the completed system and its' components. Extended warranty periods for specific equipment has been indicated in these specifications as required.

1.4 QUALITY ASSURANCE

A. The term "Electrical Contractor" shall mean the firm or corporation with a Class "A" License who is to provide, furnish, and install a complete electrical system as shown on the drawings and specified herein.

B. Trade names and catalog numbers used in these specifications shall designate quality and characteristics of the equipment and materials that are acceptable. All electrical equipment entering into the fabrication and erection of the work specified shall be in strict accordance with the specifications. Substitutions shall be considered by the Engineer provided the application for such substitution is made in writing giving complete pertinent data and specifications for the equipment offered in respect to the equipment specified. When substitutions are offered, they shall be submitted with a statement indicating the change in contract price, if any involved if the materials or equipment offered were accepted.

C. Legends, notes, schedules, and dimensioned details shown on the drawings shall be carefully followed. All electrical equipment shall be installed so as not to interfere with the work of other trades. Electrical Contractor shall cooperate with the General Contractor and other subcontractors in advance of the construction to correlate the work and avoid interference with work of other trades. Where electrical work is installed that interferes with the work of other trades without notice to the General Contractor of such interference, the Electrical Contractor shall, at his own expense, reinstall or alter same including damage to the work of other trades, in compliance with the general intent of the drawings and these specifications.

D. Electrical drawings as presented are diagrammatic only and are intended to show the approximate location of the electrical work as related to the structure unless specifically dimensioned. The correct location and relation to the electrical work to the structure when required shall be defined by reference to the working drawings, or to

be determined by actual field requirements. Electrical Contractor shall maintain a record of field changes and shall furnish the Engineer with "RECORD" wiring diagrams to show any change from the Engineer's original design. Record drawings shall indicate circuit-numbering system for control and instrumentation wiring.

E. All electrical work, equipment, and materials provided under this contract shall be in strict accordance with the requirements of the applicable regulations of the Virginia Uniform Statewide Building Code, National Electrical Code and the wiring rules and requirements of Virginia Power Company. The Electrical Contractor shall obtain all permits required and pay the fees so levied and file a certificate of inspection by the proper authorities having jurisdiction with the Engineer. The electrical subcontractor shall pay for all temporary power used during the course of construction. All charges for electrical energy passing through the owner's electrical service connection prior to placing the system in operation shall be at the contractor's expense.

F. The Electrical Contractor shall use all new materials unless otherwise noted. Contractor shall comply with accepted industry standards. All fixtures and equipment shall be Underwriters' Laboratories tested, rated, and so labeled. All work shall be executed in a workmanlike manner so as to present a neat appearance. (See NECA manual "Standard of Installation" for approved methods and workmanship.) All equipment shall be left complete and in good operating order. All of the Electrical Systems shall be installed by trained mechanics who are certified in their respective trades under the supervision of an Electrical Contractor licensed to install the work in its entirety as covered by the drawings and these specifications.

PART 2- PRODUCTS

2.1 MATERIALS

A. Nameplates

1. General: Furnish and mount on each panelboard, starter, safety switch, remote control, push-button station, and all similar controls, a nameplate descriptive of the equipment or equipment controlled. Submit complete list of nameplates with wording and location.
2. Constructed from black background phenolic material laminated with a clear main front core to provide for reverse engraving. Reverse engraved letters shall be 3/8-inch high minimum and paint filled white. Mounting holes at each end to accept stainless steel screws and an adhesive type fastener.

B. Supporting Material

1. Complete with hangers, connectors, bolts, clamps, and necessary accessories to make a complete installation. Supporting material shall be galvanized, painted, or otherwise suitably finished for the installed environment.

C. Electrical Cabinetry

1. Furnished with provisions for front access only unless otherwise noted.

PART 3- EXECUTION

3.1 DELIVERY, STORAGE AND HANDLING

A. Deliver materials to job site in the manufacturer's packaging or crate.

B. Store materials off ground and under cover to prevent damage, deterioration, or contamination.

C. Promptly remove from the site any materials which show evidence of damage, deterioration, or contamination.

3.2 INSTALLATION

A. Testing and placing in Service:

1. Furnish all necessary instruments and equipment and provide testing to confirm proper operation of electrical systems and equipment. Submit four copies of test results.
2. Test results shall include: service voltage at no load, service voltage at maximum load, voltage drop when largest motor is started, maximum load on each feeder, total service maximum load, ground resistance of main service ground.
3. Instruct Owner's personnel in proper operation and maintenance of equipment.

B. Provide equipment connections complete with motor controls, switches, wiring devices, control devices, protective devices, wiring, and other accessories. All equipment and connections shall be as recommended by the manufacturer or as indicated on drawings and specified in specifications.

C. Equipment connections for equipment furnished by the Owner or under separate contract shall be complete as specified in the above paragraph. Refer to other sections of these specifications and drawings for definition of extent of electrical switchgear, equipment, materials, and wiring to be provided by the respective sub-contractors.

D. Install control and alarm wiring for all equipment, mechanical and electrical, in accordance with Division 16 specification sections. Before installing control circuits, ensure that controls and wiring diagrams are in accordance with those furnished with the equipment. Make any changes required due to the different equipment, more up-to-date controls, or safety devices, so that the equipment operates as required and specified. Control voltage shall not exceed 132 volts unless indicated otherwise on the drawings.

E. When equipment is supplied with electrical requirements other than those specified or shown on the drawings, associated electrical devices and circuitry of the correct sizes and ratings shall be provided.

F. CLEAN UP

1. Remove all labels, shipping documents, wrapping materials, etc., where they are not a part of the finished installation. Nameplates are to be cleaned and left in a legible condition. All finger marks, surplus wire-pulling compound, sealers, and construction debris are to be removed from the surface.
2. Tool marks and scratches will be touched-up by painting. However, excessive amounts of touch-up will warrant painting of the entire surface by a qualified contractor with the cost of painting to be borne by the electrical contract.

END OF SECTION

SECTION 16110
RACEWAYS

PART 1- GENERAL

1.1 RELATED DOCUMENTS

A. The Contract Documents apply to this section.

1.2 SUMMARY

A. Furnish all labor, materials, tools, equipment, and services and although such work is not specifically indicated, furnish and install all supplementary or miscellaneous items, appurtenances and devices incidental to or necessary for a complete installation.

1.3 SUBMITTALS

A. The Contractor shall submit all submittal data in a timely manner in accordance with the approved submittals schedule.

B. Manufacturer's Data

1. Submit data on each device to be installed.
2. Submittals for each manufactured item shall be Manufacturer's descriptive literature (equipment specification), equipment drawings, diagrams, performance and characteristic curves and catalog cuts. The submittal shall include the Manufacturer's name, trade name, catalog model or number, nameplate data, dimensions, physical layout, capacity, specification reference and all other information necessary to establish contract compliance.
3. Complete and detailed system schematic drawings showing all components and the electrical point-to-point connections for each system.
4. The submittal shall be organized in a logical manner.

C. Submittals for Closeout

1. Submit in accordance with Contract Closeout Requirements.
2. Maintenance Data: Identify equipment maintenance requirements, servicing cycles, and local spare part source.

PART 2- PRODUCTS

2.1 Rigid steel conduit: low carbon, hot-dipped galvanized inside and outside, with threaded ends, minimum size 3/4 inch. Threaded fittings, cast iron or alloy steel, galvanized.

2.2 PVC coated rigid steel conduit: Rigid steel conduit with a factory-applied, 20 mil PVC coating bonded to the exterior of the conduit and conduit fittings.

2.3 PVC Schedule-80 conduit.

2.4 Liquidtight flexible metal conduit: "Sealtite" or equal.

2.5 Explosion proof flexible metal conduit: Crouse-Hinds series EC.

2.6 Sealing fittings for hazardous locations: Crouse-Hinds EYS, EZD, EZS or equal.

2.7 Thruwall sealing fittings: Type WSK by O-Z Electrical Manufacturing Company.

2.8 Insulated bushings: Type B, as applicable, by O-Z or Series BU500, as applicable, by Steel City.

2.9 Pulling in wire: Provide 5/32-inch polyethylene rope.

2.10 Thread lubricant/sealant shall be Crouse-Hinds Type STL except, when required on joints for heat producing elements such as lighting fixtures, it shall be Crouse-Hinds Type HTL.

PART 3- EXECUTION

3.1 INSTALLATION

A. Install all conduit as required for this contract per NEC, by type and use unless noted otherwise within this specification.

B. Space groups of conduits uniformly. For bends and offsets, use an approved bending machine.

C. Cut all conduits with an approved cutting machine and ream after threading to remove all burrs.

D. Fasten conduit securely to outlets, junctions and pullboxes to ensure firm electrical contact. Join conduit with approved couplings. No running threads will be allowed.

E. Provide insulated bushings and double locknuts on conduits entering or leaving sheet metal outlet, junction, or pullboxes, and cabinets.

F. Avoid condensation pockets in installations. Keep conduit, fittings and boxes free from foreign matter before, during and after installation.

G. Not more than one exposed conduit shall be run down to each exposed wall switch or outlet box.

H. Use sealing fittings where conduits pass from hazardous areas to areas of normal atmosphere.

I. Use thruwall sealing fittings where conduits enter buildings or vaults below finished grade.

J. Conduits less than one inch may be installed in concrete but shall not cross each other. Installation of larger conduits in concrete must be approved by the Engineer.

K. Use watertight joints with buried and concrete encased conduit. All buried conduits outside of buildings shall have a minimum of 24 inches of cover. Metal conduits buried in earth shall be painted (two coats) with heavy asphaltum paint.

L. Install exposed runs of conduit either parallel or perpendicular to walls, structural members or intersections of vertical planes and ceilings. Provide right angle turns

consisting of fittings or symmetrical bends. Support conduits within 1 foot of all changes in direction.

M. Supports shall include wall brackets, trapeze hangers, strap hangers, or pipe straps secured to hollow masonry with toggle bolts, to brick and concrete with expansion bolts, to metal surfaces with machine screws.

N. Wooden plugs inserted in masonry, and the use of nails as fastening media, are prohibited.

O. Install empty conduit for future use as indicated on the drawings. Conduit shall be complete with pull cord, junction and outlet boxes.

P. Conduit shall not be supported from metal roof deck.

Q. Conduit shall not penetrate concrete bases designed for vibration isolation.

R. Except as noted in the following, install rigid steel conduit, galvanized as required by location.

1. Non-Hazardous Locations

   a. Install liquidtight (jacketed) flexible metal conduit for connections to motors and other equipment subject to vibration. The maximum allowable length is 4-Feet. Rigid Steel Conduit, galvanized by location, shall be installed and secured within 3-Feet of the vibrating equipment. Liquidtight flexible metal conduit shall only be used for the extension from the secured conduit to the vibrating equipment.
   b. Install galvanized Rigid Steel conduit where conduit is exposed, subject to damage or above grade.
   c. Install Schedule-80 PVC rigid conduit or galvanized rigid steel conduit where conduit is buried or under vehicle drive paths and parking lots. Direct buried PVC conduit shall be encased with red-dye colored concrete with support chairs, tie-downs and rebar anchors.

2. Hazardous Locations

   a. Install explosion proof liquidtight (jacketed) flexible metal conduit for connections to motors and other equipment subject to vibration. The maximum allowable length is 4-Feet. PVC coated Rigid Steel Conduit shall be installed and secured within 3-Feet of the vibrating equipment. Explosion proof liquidtight flexible metal conduit shall only be used for the extension from the secured conduit to the vibrating equipment.
   b. Install PVC coated rigid steel conduit for all equipment not subject to vibration.
   c. Install gas seal-offs sealing fittings and fill with sealing material where conduits pass from hazardous areas to areas of normal atmosphere and at other locations as required by Articles 500 and 501 of the National Electric code.

S. Provide separate conduits for AC and DC wiring, for signal wiring 50 volts or less and for signal wiring over 50 volts, per NEC.

T. Provide cast iron straps with clamp boxes for exposed conduit runs. The clamp backs shall hold the conduit off the surface.

U. Exposed threads, including those on conduits to be encased in concrete or masonry, shall be painted with a heavy coat of gray marine enamel, neatly brushed on.

END OF SECTION

SECTION 16120
WIRING

PART 1- GENERAL

1.1 RELATED DOCUMENTS

A. The Contract Documents apply to this section.

1.2 SUMMARY

A. Furnish all labor, materials, tools, equipment, and services and although such work is not specifically indicated, furnish and install all supplementary or miscellaneous items, appurtenances and devices incidental to or necessary for a complete installation.

1.3 SUBMITTALS

A. The Contractor shall submit all submittal data in a timely manner in accordance with the approved submittals schedule.

B. Manufacturer's Data

1. Submit data on each type of wire to be installed.
2. Submittals for each manufactured item shall be Manufacturer's descriptive literature (equipment specification), equipment drawings, diagrams, performance and characteristic curves and catalog cuts. The submittal shall include the Manufacturer's name, trade name, catalog model or number, nameplate data, dimensions, physical layout, capacity, specification reference and all other information necessary to establish contract compliance.
3. The submittal shall be organized in a logical manner.

C. Submittals for Closeout

1. Submit in accordance with Contract Closeout Requirements.
2. Maintenance Data: Identify equipment maintenance requirements, servicing cycles, and local spare part source.

1.4 QUALITY ASSURANCE

A. Conductor Coding:

1. Color code insulated grounding conductors in accordance with NEC 250-119.
2. Color code current carrying conductors, except control and instrumentation conductors, as scheduled on the drawings.

   a. No. 10 conductors shall have continuous insulation color.
   b. Color code conductors larger than No. 10 which do not have continuous insulation color by application of at least two laps of colored tape on each conductor at all points of access.

3. Number code for all control and instrumentation wiring at all points of access. The numbering systems shall be non-duplicating. The numbering code system shall be submitted to the Engineer for approval prior to implementation. The contractor shall record all number Codes on a set of "Record" electrical drawings.
4. The wire identifying labels shall be PVC slip-on heat embossed sleeves, properly fitted to the wire diameter or heat-shrink style. The labels shall be as manufactured by Brady Co or equal.

B. Conductor sizes are based on copper unless otherwise indicated on drawings.

PART 2- PRODUCTS

2.1 MATERIALS

A. Power and Control Conductors:

1. Conductors inside buildings shall have moisture resistant, flame retarding, thermoplastic insulation, Type "THW" or "THWN," rated for 600 volts unless otherwise indicated. (75° C. - rated for wet or dry location.)
2. Conductors shall be soft annealed copper.
3. Install power wire, VAC signal wire, VDC signal wire and analog shielded cables in separate conduits.
4. Provide No. 12 conductors, unless otherwise indicated.

    a. Control conductors shall be No. 14 minimum for NEC Class I and No. 16 for NEC Class II.

5. Conductors No. 8 AWG and larger shall be stranded.

B. Low Signal Level Instrumentation Cables

1. Single pair cable shall be provided and installed between each field instrumentation device and the main instrumentation panel. This cable is to be installed in a conduit system, as specified under Section 16110 - Raceways. The cable configuration is to be as required by the supplier of the instrumentation, which in most cases will be a single twisted, shielded pair. The same is true for the digital status and alarm (contact closure) points which transmit to the instrumentation system.
2. All single pair low level instrumentation cable is to be stranded, twisted, tinned, 18 AWG, 300 V PVC insulated, overall foil shielded with a tinned copper drain wire, and an overall PVC jacket.
3. As required, some devices and systems will require multiple pair or multiple conductor cables. Such cables will meet the above requirements with an overall 100% coverage foil shield and an overall PVC jacket.
4. All wire lists and run sheets shall become a portion of the Project Documentation Package and also included on the record drawings required elsewhere in this Project Manual. Splicing of cables is not acceptable.

PART 3- EXECUTION

3.1 INSTALLATION

A. Install wiring in conduit unless otherwise shown.

B. Install splice-free conductors within ducts, conduits or earth.

C. Connect No. 10 and smaller wires with constant pressure expandable spring type connectors, "Scotchlok" by 3M or B-Cap by Buchanan.

D. Connect No. 8 and larger wires with compression connectors or splices as manufactured by Burndy, or T & B.

E. Insulate splicing connectors to at least 200 percent of wire insulation. Use pre-stretched tubing connector insulators, 3/M PST for No. 2 and larger conductors.

F. Use terminal strips to interconnect and splice control, instrumentation, and communication cables. Terminal lugs #10 and smaller to be compression type; #10 to #1 AWG, bolted or compression type; and #1 AWG and larger, hydraulic compression type, such as Mode 6, Thomas & Betts or Burndy.

G. Pull conductors using recognized methods and equipment leaving ample Lengths of wire at junctions for connections.

   1. Use soapstone or UL approved compound as required to facilitate pulling.
   2. Complete and cleanout conduit system before pulling wire.

H. Form and tie all wiring in panelboards and control panels.

   1. A maximum of 24 current carrying conductors will be permitted in a single raceway unless specifically indicated otherwise on the drawings. Derate in accordance with NEC.

I. Two or three single phase circuits may be installed in one conduit using conductors of different phases and a common neutral.

J. Install identification labels in all junction boxes and terminal points so as to be clearly visible.

K. Install all instrumentation wiring in accordance with the recommendations of the instrumentation equipment supplier using low signal level instrumentation cables.

L. The instrumentation equipment supplier shall recommend wire sizing for signal conductors.

M. Make cable runs continuous without intermediate splicing whenever possible.

   1. Use terminal strips in above-grade exterior or in all interior locations to interconnect and splice instrumentation cables.
   2. Install insulated, spade-type wire lugs on all conductors at all screw-type terminal connections.

N. Make final connections to instrumentation equipment.

END OF SECTION

SECTION 16131
PULL AND JUNCTION BOXES

PART 1- GENERAL

1.1 RELATED DOCUMENTS

A. The Contract Documents apply to this section.

1.2 SUMMARY

A. Furnish all labor, materials, tools, equipment, and services and although such work is not specifically indicated, furnish and install all supplementary or miscellaneous items, appurtenances and devices incidental to or necessary for a complete installation.

B. Install pull and junction boxes where shown on the drawings, and where required for changes in direction, at junction points, and to facilitate wire pulling. Furnish box sizes in accordance with NEC unless larger boxes are indicated.

C. Conduit bodies may be used on exposed work in lieu of boxes.

1.3 SUBMITTALS

A. The Contractor shall submit all submittal data in a timely manner in accordance with the approved submittals schedule.

B. Manufacturer's Data

1. Submit data on each type of pull box or junction box to be installed.
2. Submittals for each manufactured item shall be Manufacturer's descriptive literature (equipment specification), equipment drawings, diagrams, performance and characteristic curves and catalog cuts. The submittal shall include the Manufacturer's name, trade name, catalog model or number, nameplate data, dimensions, physical layout, capacity, specification reference and all other information necessary to establish contract compliance.
3. The submittal shall be organized in a logical manner.

C. Submittals for Closeout

1. Submit in accordance with Contract Closeout Requirements.
2. Maintenance Data: Identify equipment maintenance requirements, servicing cycles, and local spare part source.

PART 2- PRODUCTS

2.1 MATERIALS

A. Provide steel boxes and removable covers of code gage, hot-rolled sheet steel, hot-dipped galvanized inside and outside, for above ground work above the level of the pump room floor. Furnish weatherproof boxes when installed above ground outside.

B. Provide cast aluminum alloy boxes (Millark or Crouse-Hinds) or hot-dipped galvanized inside and outside for wet well, dry well, and wet locations. Furnish removable covers with gaskets and stainless steel, brass, or bronze screws.

C. Provide concrete boxes for underground work unless otherwise indicated in the drawings. Furnish stainless steel frames and cover with cover attached to frame with hexagon head, brass or bronze cap screws, 3/8 inches in diameter. Provide rubber gasket for sealing between cover and frame. Paint cover with two coats of heavy asphaltum as required.

PART 3- EXECUTION

3.1 Locate boxes as shown on drawings. Minor adjustments shall be made as necessary to avoid other utilities and other restrictions.

END OF SECTION

SECTION 16132
PILOT DEVICES

PART 1- GENERAL

1.1 RELATED DOCUMENTS

A. The contract documents apply to this section.

B. References

1. National Electrical Manufacturers Association (NEMA) Publications
2. ICS 1 General Standards for Industrial Controls and Systems
3. ICS 2 Standards for Industrial Control Devices, Controllers, and Assemblies
4. ICS 6 Enclosures for Industrial Controls and Systems

C. Instrument Society of America (ISA) Publications

1. S5.1 Instrumentation Symbols and Identification
2. S51.1 Standard Process Instrumentation Terminology

1.2 SUMMARY

A. Furnish all labor, materials, tools, equipment, and services and although such work is not specifically indicated, furnish and install all supplementary or miscellaneous items, appurtenances and devices incidental to or necessary for a complete installation.

1.3 SUBMITTALS

A. The Contractor shall submit all submittal data in a timely manner in accordance with the approved submittals schedule.

B. Manufacturer's Data

1. Submit data on each type of device to be installed.
2. Submittals for each manufactured item shall be Manufacturer's descriptive literature (equipment specification), equipment drawings, diagrams, performance and characteristic curves and catalog cuts. The submittal shall include the Manufacturer's name, trade name, catalog model or number, nameplate data, dimensions, physical layout, capacity, specification reference and all other information necessary to establish contract compliance.
3. Complete and detailed system schematic drawings showing all components and the electrical point-to-point connections for each system.
4. The submittal shall be organized in a logical manner.

C. Submittals for Closeout

1. Submit in accordance with Contract Closeout Requirements.
2. Maintenance Data: Identify equipment maintenance requirements, servicing cycles, and local spare part source.

1.4 WARRANTY

A. Each type of device covered under this section to be used for this project shall be installed according to the manufacturer's installation instructions and recommendations in order to maintain the manufacturer's complete warranty.

PART 2- PRODUCTS

2.1 MATERIALS

A. General: Pilot devices shall be corrosion resistant (NEMA 4, 4X, and 13) heavy-duty type, rated 600 volts. Manufacturer shall be Allen Bradley 800H (30.5mm) Series or approved equal.

B. Selector switches shall be single or multiple block, rotary type and with maintained positions.

C. Pushbutton switches shall be multiple contact, single or multiple (as required) block, spring return type with each block having one normally open and one normally closed contact.

D. Standard Indicating lights and push-to-test indicating lights shall be the transformer type, 120 volt primary, 6 volt secondary.

PART 3- EXECUTION

3.1 INSTALLATION

A. Install all devices as required to provide for a complete operating system.

B. Install front-of-panel mounted devices in control panels between 3 feet - 2 inches and 5 feet - 6 inches above finished floor.

END OF SECTION

SECTION 16133
POSITION SWITCHES

PART 1- GENERAL

1.1 RELATED DOCUMENTS

A. The contract documents apply to this section.

B. References

1. National Electrical Manufacturers Association (NEMA) Publications
2. ICS 1 General Standards for Industrial Controls and Systems
3. ICS 2 Standards for Industrial Control Devices, Controllers, and Assemblies
4. ICS 6 Enclosures for Industrial Controls and Systems

C. Instrument Society of America (ISA) Publications

1. S5.1 Instrumentation Symbols and Identification
2. S51.1 Standard Process Instrumentation Terminology

1.2 SUMMARY

A. Furnish all labor, materials, tools, equipment, and services and although such work is not specifically indicated, furnish and install all supplementary or miscellaneous items, appurtenances and devices incidental to or necessary for a complete installation.

1.3 SUBMITTALS

A. The Contractor shall submit all submittal data in a timely manner in accordance with the approved submittals schedule.

B. Manufacturer's Data

1. Submit data on each type of device to be installed.
2. Submittals for each manufactured item shall be Manufacturer's descriptive literature (equipment specification), equipment drawings, diagrams, performance and characteristic curves and catalog cuts. The submittal shall include the Manufacturer's name, trade name, catalog model or number, nameplate data, dimensions, physical layout, capacity, specification reference and all other information necessary to establish contract compliance.
3. Complete and detailed system schematic drawings showing all components and the electrical point-to-point connections for each system.
4. The submittal shall be organized in a logical manner.

C. Submittals for Closeout

1. Submit in accordance with Contract Closeout Requirements.
2. Maintenance Data: Identify equipment maintenance requirements, servicing cycles, and local spare part source.

1.4 WARRANTY

A. Each type of device covered under this section to be used for this project shall be installed according to the manufacturer's installation instructions and recommendations in order to maintain the manufacturer's complete warranty.

PART 2- PRODUCTS

2.1 MATERIALS

A. Limit Position switches, general service shall have the following features:

1. Contacts
   a. DPDT
   b. Rating: 10 Amp, 120 Volts
2. Enclosure:
   a. Non-Hazardous Areas - NEMA-4 designed for watertight applications only.
   b. Hazardous Areas - Explosion proof construction as required by location.
3. Manufacturer and Type of limit switches shall be Allen-Bradley, Bulletin 802X Watertight or approved equal.

B. Magnetic, inductive or capacitive proximity switches are not acceptable.

C. Float Switches

1. Wet Well and Headworks Areas
   a. Contacts:
      1) Normally Open – Closes on level rise
      2) Rating: 10 Amp, 120 Volts
   b. Suitable for use in waste water
   c. Class 1 Division 1 rated as defined in the National Electric Code.
   d. Integral float/cable assembly
   e. No spliced wiring shall be used in the wet well High Level Alarm to avoid corrosion.
2. Chemical Tank
   a. Contacts:
      1) Normally Open – Closes on level rise
      2) Rating: 10 Amp, 120 Volts
   b. Suitable for use in the specified chemical
   c. Integral float/cable assembly

PART 3- EXECUTION

3.1 INSTALLATION

A. Coordinate selection and installation of position switches with associated equipment manufacturers.

END OF SECTION

SECTION 16134
SWITCH AND OUTLET BOXES

PART 1- GENERAL

1.1 RELATED DOCUMENTS

A. The contract documents apply to this section.

1.2 SUMMARY

A. Furnish all labor, materials, tools, equipment, and services and although such work is not specifically indicated, furnish and install all supplementary or miscellaneous items, appurtenances and devices incidental to or necessary for a complete installation.

1.3 SUBMITTALS

A. The Contractor shall submit all submittal data in a timely manner in accordance with the approved submittals schedule.

B. Manufacturer's Data

1. Submit data on each type of device to be installed.
2. Submittals for each manufactured item shall be Manufacturer's descriptive literature (equipment specification), equipment drawings, diagrams, performance and characteristic curves and catalog cuts. The submittal shall include the Manufacturer's name, trade name, catalog model or number, nameplate data, dimensions, physical layout, capacity, specification reference and all other information necessary to establish contract compliance.
3. The submittal shall be organized in a logical manner.

C. Submittals for Closeout

1. Submit in accordance with Contract Closeout Requirements.
2. Maintenance Data: Identify equipment maintenance requirements, servicing cycles, and local spare part source.

1.4 WARRANTY

A. Each type of device covered under this section to be used for this project shall be installed according to the manufacturer's installation instructions and recommendations in order to maintain the manufacturer's complete warranty.

PART 2- PRODUCTS

2.1 MATERIALS

A. Provide boxes, complete with cover or device plate for switches, receptacles, or other similar devices, or where required for pulling or joining branch circuit wiring.

B. Conduit bodies may be used on exposed conduit work instead of outlet boxes.

C. Use sheet steel boxes, zinc coated or cadmium plated, for concealed interior work, or exposed interior work at least 8 feet above finished floor levels.

D. Use cast boxes, cast aluminum alloy, or zinc-cadmium finish malleable iron, for exposed interior work within 8 feet above finished floor levels, and for exposed or concealed work in wet, damp or exterior locations. Cast boxes shall be Series FD by Crouse-Hinds or Appleton.

E. Wall box sizes (minimum) shall be 4 inches wide, 4 inches long and 2 1/8 inches deep where wall construction permits. Where wall construction dictates width may be reduced to 2 1/8 inches, or depth to 1-1/2 inches.

F. Fixture outlets (minimum) 4 inches octagonal (4 11/16 inches x 2-1/2 inches deep where required to accommodate larger conduit or larger number of wires).

G. Gang boxes shall be one piece (minimum) 2-1/8 inches deep.

H. Provide lighting fixture outlet boxes, with suitable studs and supports for carrying the weight of the fixture, where fixtures are to be mounted on the box. Increase box depth, as required, for additional wires and conduits.

I. Provide cover or device plates for outlet boxes as follows unless otherwise noted:

1. Finished areas - Flush type stainless steel, satin finish fastened with stainless steel recessed machine screws.
2. Unfinished areas - Zinc coated sheet metal, aluminum or cast metal as appropriate for type of box.
3. Exterior areas - Copper free aluminum with gray, powder epoxy finish, gasketed, weatherproof, Crouse-Hinds WLRD for duplex receptacles and WLRS for single receptacles.

J. Provide covers and gaskets with conduit bodies, of a design suitable for the application. Provide watertight conduit bodies in damp and wet locations. Conduit bodies shall be cast ferrous alloy, galvanized, as manufactured by Crouse-Hinds, Pyle National, Killark, or Appleton.

PART 3- EXECUTION

3.1 INSTALLATION

A. Flush mount boxes in finished walls. 3/16 inch maximum gaps allowed for noncombustible walls.

B. Adjust location of outlets in masonry to occur in the nearest joint to the height specified.

C. Support all boxes to maintain alignment and rigidity.

D. Clean boxes of all foreign matter prior to installation of wiring or devices..

END OF SECTION

SECTION 16170
VARIABLE FREQUENCY DRIVE

PART 1- GENERAL

1.1 SUMMARY

A. Section Includes: Requirements for providing, installing, and testing the variable frequency drive units to be used to power the pump motors. Provide drives in individual free standing enclosures. This specification covers the requirements for the Waste Water Pump Station VFD1 & VFD2 and Water Booster Pump Station VFD3 & VFD4.

1.2 REFERENCES

A. NEMA ICS 1 - General Standards for Industrial Control and Systems

B. NEMA ICS 2 - Industrial Control Devices, Controllers and Assemblies

C. NEMA ICS 3 - Industrial Systems

D. NEMA ICS 3.1 - Safety Standards for Construction and Guide for Selection, Installation and Operation of Adjustable Speed Drive Systems

E. NEMA 250 - Enclosures for Electrical Equipment

F. NFPA 70 - National Electrical Code

G. IEEE 85 - Test Procedure for Airborne Sound Measurements on Rotating Electric Machinery

H. IEEE 519 - Guide for Harmonic Control and Reactive Compensation of Static Power Converters (1992)

I. UL 845 - Motor Control Centers

1.3 SYSTEM DESCRIPTION

A. Provide adjustable frequency drives to vary the speed of NEMA standard, 3-phase, 460-volt, induction motors and driven equipment by varying the frequency and voltage applied to the motor. The VFD input shall be 460-volt 3-Phase.

B. Design adjustable frequency drive to fit in the space shown. If VFD equipment is provided which exceeds the space available, make all changes needed to provide for the operation of all pumps as variable speed units at no additional cost to the OWNER.

C. The maximum space available for each VFD is:

1. 36 inches wide for 75HP

2. 24 inches wide for 25HP.

D. Provide adjustable frequency drive units that are compatible with the specified pumps.

E. Torque Output: Provide constant torque output drives.

F. Performance Requirements: Provide variable frequency drives to meet the following requirements:

1. Operate at less than five percent total harmonic distortion for voltage and current (IEEE Standard 519-92) to the supply voltage for the station as

measured at the point of common coupling (switchgear incoming line terminals).

2. Operate at a minimum efficiency (including input and output transformers) of 95 percent at rated load.

3. Operate from a 230-volt, 1-phase, 60-hertz supply with a voltage variation of plus 10-percent or minus 15-percent and a frequency variation of plus or minus 2-hertz. The variable frequency drive shall be sized, designed and rated as required to operate a three phase pump by converting 240VAC single phase power to three phase power.

4. Operate an induction motor as specified, including a high efficiency, high power factor premium duty motor, with no detriment to motor life.

5. Operate under the following ambient conditions:

   a. Ambient Temperature: 0 to 50 degrees C

   b. Humidity: 0 to 95 percent

1.4 SUBMITTALS

A. General: Provide all submittals, including the following, as specified in the General Requirements.

B. Product Data and Information: Submit catalog data including rating and descriptive literature of all components and systems.

C. Shop Drawings: Submit the following shop drawings:

1. Bill of materials including manufacturers name and catalog number

2. Outline drawings showing dimensions, arrangement, elevations, identification of components and nameplate schedule for all units

3. Interconnection wiring diagrams

4. Individual schematic control diagrams for each unit

5. One line diagrams

6. Obtain and enter full performance data for all pump motors

7. Certification that the adjustable frequency drives are compatible with the motors and the equipment loads to be driven

8. System harmonic distortion study:

9. Obtain data on utility services, plant loads and plant operation.

10. Prepare a harmonic distortion study of the electrical system to determine voltage and current harmonics at various adjustable speed drive speed, load settings and different number of VFD units operating. The maximum station operation condition is with two VFD units operating at full speed.

11. Design system to maintain electrical disturbances below the requirements established by IEEE 519-92.

12. Include analysis of all data with recommendation.

D. Quality Control: Submit test reports, certificates of inspection and manufacturer's instructions.

E. Operations and Maintenance Manuals: Provide operations and maintenance manuals as specified in the General Requirements.

1.5 QUALITY ASSURANCE

A. Codes: Provide all adjustable frequency drives manufactured in accordance with referenced standards.

B. Provide a UL Inc. Label or certification of listing by C.S.A. or other recognized testing organization for each adjustable frequency drive.

C. Manufacture and install each adjustable frequency drive in accordance with the NEC and local codes.

D. Coordinate the requirements of the pump motors with the VFD equipment provided.

1.6 DELIVERY, STORAGE, AND HANDLING

A. General: Deliver, store and handle all products and materials as specified in the General Requirements.

1. Shipping and Packing: Rigidly brace and protect against weather, damage, and undue strain, all structures, equipment and materials.

2. Storage and Protection: Furnish clean storage facilities for all equipment delivered but not installed. Provide conditioned air for storage facilities in accordance with the equipment manufacturer's recommendations.

3. Spare Parts: Deliver spare parts at the same time as pertaining equipment. Deliver the spare parts to the OWNER after completion of the work.

1.7 SPARE PARTS

A. General: Furnish the following spare parts per each size and type of drive:

1. All parts recommended by the manufacturer in published literature as spare parts. As a minimum, provide the following:

a. Six of all sizes and types of power and control fuses

b. One LED displays of each color

c. One speed indicator meter relay

d. Two of each type of push button and selector switch used

e. Two printed circuit boards of each type used

f. Four solid state switching devices of each type used

g. Four filter capacitors of each size used

h. Four diodes of each size and type used

i. Four transistors, gate turn off thyristors or SCRs of each type used

j. Two keypads of each type used

k. Five complete sets of air filters for each VFD unit provided

l. Cooling fan(s) for one VFD.

m. Packaging: Package spare parts in containers bearing labels and identify all spare parts for reordering. Deliver spare parts in original factory packages.

PART 2- PRODUCTS

2.1 MANUFACTURERS

A. Furnish adjustable frequency drive units manufactured Square-D or approved equal.

2.2 DESIGN

A. Input Disconnect: Furnish an input circuit breaker with an interrupting rating of 65,000 rms symmetrical amperes.

B. Input Reactor: Furnish a 3-Phase input line reactor.

C. Converter Section: 6 pulse (minimum) unit utilizing SCRs or diodes to power a 3-phase constant torque motor including the Service Factor up to 1.15.

D. Filter Sections: Furnish filter capacitors as required.

E. Inverter Section: Design adjustable frequency drive inverter section to convert the fixed dc voltage to an adjustable frequency output utilizing a pulse width modulation, inverter of the insulated gate bipolar transistor type. Maintain a constant volts per hertz ratio on the output with voltage boost for startup as required.

1. Data from Keypad:

a. Output ammeter

b. Elapsed time meter

c. Diagnostics package with fault indication

2. Internal Control Adjustments: Include the following control adjustments for each drive:

a. Acceleration time, 1 to 60 seconds

b. Deceleration time, 1 to 60 seconds

c. Minimum speed limit

d. Maximum speed limit

e. Inverter current limit

f. Supply undervoltage trip

3. Protection Features: Provide the following drive protection features:

a. Input line current limiting fuses rated 200,000 rms symmetrical amperes short circuit current or Circuit Breaker rated 65,000 rms symmetrical amperes short circuit current.

b. Electronic overcurrent protection for instantaneous overload

c. AC input line undervoltage protection, adjustable from 65-100 percent nominal voltage with time delay adjustment and low speed override.

d. Overfrequency protection

e. Phase loss protection

f. DC overvoltage protection

g. Logic supply voltage low level protection

h. Line-to-line and line-to-ground output short circuit protection

i. Line-to-line and line-to-ground surge arresters sized for 480-volt 3-phase grounded wye system

j. Overload capability of 110% of the motor FLA based on the NEC ratings for 60 seconds

k. Control circuit fuses

l. Overtemperature protection

m. Diagnostics module to indicate protection trip conditions

n. Current Limiting VFD Start profile (100-300%) Initially set at 110%.

o. The Control Logic Section: Furnish a fully digital control logic system that does not require analog adjustment pots or fixed selector resistors. Including a microprocessor with a 12-bit arithmetic logic unit, and 8K-bytes of supplementary on-board static RAM. The program memory to be stored in a 2-megabyte electrically programmable ROM (minimum). Provide the control logic section with the capability to allow the unit to automatically restart after the return of power without having to re-program the system.

2.3 VFD PANEL COMPONENTS

A. General: Furnish circuit breakers, fuses, transformers, push buttons, switches, indicating lights, relays and timers per the electrical specifications.

B. Power Solid State Components: Furnish power solid state switching components with a one minute current rating greater than 110 percent of rated current for variable torque drives or 150 percent of rated current for constant torque drives.

C. Provide each VFD unit with a programmable controller.

D. Furnish a door mounted membrane keypad with integral 2-line, 24 character LCD display, capable of controlling the VFD and setting drive parameters. Include the following features in the keypad:

1. The digital display must present all diagnostic message and parameter values in English engineering units when accessed, without the use of codes.

2. The keypad module shall contain a "self-test" software program which can be activated to verify proper keypad operations.

3. Allow the operator to enter exact numerical settings in English engineering units. Provide a plain English user menu in software as a guide to parameter setting, (rather than codes). Factory set the drive parameters in EEPROM and resettable in the field through the keypad. The EEPROM stored drive variables must be able to be transferred to new boards to reprogram spare boards.

4. The keypad shall supply the following door mounted digital indications:

a. Speed demand in percent

b. Input current in amperes

c. Output current in amperes

d. Output frequency in hertz

e. Input voltage

f. Output voltage

g. Total 3-phase kW

h. Kilowatt hour meter

i. Elapsed time running meter

j. VFD operating temperature

E. Provide the following system configuring settings, without exception, field adjustable through the keypad/display unit and/or via a serial communication port. Except for Motor Nameplate Data, all parameters must be adjustable while the processor is on-line and the drive is running.

1. Motor Nameplate Data

a. Motor frequency

b. Number of poles

c. Full load speed

d. Motor volts

e. Motor full load amps

f. Motor Hp

g. Current limit, max.

2. VFD Limits

a. Manual acceleration rate

b. Manual deceleration rate

c. Auto acceleration rate

d. Auto deceleration rate

e. Motor flux buildup delay: time/amount

f. I boost

g. Overload trip curve select (Inverse or Constant)

h. Min/Max speed (frequency)

i. Auto reset for load or voltage trip select

j. Slip compensation

k. Catch-A-Spinning-Load select

l. Overload trip time set

3. VFD Parameters

a. Voltage loop gain

b. Motor Temperature

c. Individual motor winding temperature (RTD/motor)

d. Motor winding temperature alarm

e. Controller Adjustments

f. PID control enable/disable

g. Setpoint select

h. Proportional band select

i. Reset time select

j. Rate time select

k. Input signal scaling

l. Input signal select (4-20 mA/0-5 Volts)

m. Auto start functions: On/Off, Delay On/Off, Level Select On/Off

n. Speed Profile: Entry, Exit, Point Select

o. Min, Max Speed Select

p. Inverse Profile Select

q. Critical speed avoidance select

F. Diagnostic Features and Fault Handling

1. Include a comprehensive microprocessor based digital diagnostic system which monitors its own control functions and displays faults and operating conditions.

2. Provide a "FAULT LOG" to record, store, and display the 6 most recent events.

3. Make the fault log record accessible line by line on the keypad display.

G. Store all drive setting adjustments and operation parameters in a parameter log which lists allowable maximum and minimum points as well as the present set values. This parameter log shall be accessible via a RS232 serial port as well as on the keypad display.

2.4 VFD PANEL CONTROL DEVICES AND CIRCUIS

A. Provide terminals in the enclosure as required for all connections between the VFD and other equipment.

B. Control Power Transformer: Furnish a constant voltage control power transformer to maintain control power with supply voltage variations from 70-110 percent nominal. Provide short circuit protection as required for all circuits

C. Provide a 24Vdc Power supply with short circuit protection as required and sized as required for all circuits.

D. Pump Start Delay Timer (Operator adjustable from 1-60 seconds).

E. Provide door mounted control and monitoring devices and functions for each drive as follows:

1. Panel Ventilation Fan with thermostat.
2. Pump "HOA" control selector switch
   a. Hand Control
      1) VFD Starts in Hand
      2) VFD Speed control via Keypad
   b. Auto Control
      1) VFD Start Contact from Panel PCP with VFD Speed signal from Panel PCP
      2) VFD Start from High Level Float, VFD Stop from Low Level Float and a fixed VFD Speed Parameter Setpoint.
   c. Off
      1) VFD Stop/Reset
3. Pad Lockable Pump Stop pushbutton
4. Speed meter with hertz and 0-100 percent scales
5. Pump "ON" and "OFF" status lights

F. Provide a door mounted alarm status light for each of the following alarm conditions. Provide the control circuit and all associated components so that each alarm condition independently disables the VFD and also provides a seal-in circuit so the associated alarm status light stays ON and the VFD is not allowed to restart until a VFD RESET contact is received from Panel PCP or by an operator pressing the VFD RESET Button mounted on the door of the faulted VFD. The following alarm conditions apply.

1. Door mounted STOP maintained illuminated pushbutton capable of being locked in the STOP position. The pushbutton shall be supplied with the following contact functions:
   a. Disable the VFD.
   b. Signal Panel PCP.
   c. Turn on the pushbutton light when pressed.
2. Seal Leak Relay and Pump Winding Over-Temperature Relay with associated pump protection circuit. For each of these two conditions, provide the following contacts:
   a. Disable the VFD.
   b. Signal Panel PCP.
   c. Turn on the status light when faulted.
3. Check Valve Fail-To-Open Alarm Circuit: Provide a pump protection circuit to stop the pump after an adjustable amount of time (1-30 sec) if the VFD is running and the Check Valve limit switch indicates it is closed. Provide the following contacts:

a. Disable the VFD.

b. Signal Panel PCP.

c. Turn on the status light when faulted.

4. Pump Motor Local Disconnect: Provide the following contacts:

a. Disable the VFD.

b. Signal Panel PCP.

c. Turn on the status light when the disconnect is OFF.

2.5 VFD PANEL ENCLOSURE

A. Furnish NEMA 12 adjustable frequency drive enclosures with ambient compensation. In addition to that noted in this specification, Reference Contract Drawings for typical diagram and associated components.

2.6 SOURCE QUALITY CONTROL

A. Shop Test: Shop test each adjustable frequency drive in accordance with IEEE and NEMA standards, including high potential tests and other standard tests for that particular class of equipment.

B. Operational Tests: After the equipment has been completely assembled, perform operational test to determine operating conditions and circuit continuity.

2.7 IDENTIFICATION

A. Provide identification nameplate.

B. Install nameplates for devices located on doors so they are visible to person 5'-8" tall standing 3'-0" in front of the equipment.

C. Locate nameplates so that they are readily associated with items labeled.

D. Where nameplates are installed on removable relay or device doors, install an additional nameplate within the relay or device.

E. Where nameplates are located on other compartments than those served, add additional engraving to identify units served.

F. Provide labels for all relays located in the VFD enclosure. Mount labels so they are clearly visible from the front of the enclosure without entering the enclosure.

2.8 WIRING

A. Provide internal wiring with stranded switchboard wire having 600-volt rated, flame-resistant, type SIS insulation. Use No. 18 AWG wire for control interconnections. Provide power connections as required for the service.

B. Provide wire markers at each end of all wires.

C. Where wiring connections are made to equipment mounted on hinged doors, provide connections with extra flexible wires suitably cabled together and cleated.

D. Provide wiring of all control connections to all external connections through individual positive latch pull-apart type control terminal blocks rated 600 volts. Locate terminal blocks for front access.

E. Provide sufficient terminals for all devices external to the adjustable frequency drive.

PART 3- EXECUTION

3.1 INSTALLATION

A. General: Install all equipment in accordance with the manufacturer's recommendations and approved shop drawings and as specified in the General Requirements.

B. Protective Adjustments: Set all circuit breakers per the approved short circuit and coordination study.

C. Operational Adjustments: Set all operational devices for proper system operation.

D. Cable Connections: Terminate and label all field wiring per approved drawings.

3.2 FIELD QUALITY CONTROL

A. Inspections: Inspect, adjust and check the installation for physical alignment, cable terminations and ventilation.

B. Tests: Perform the following field tests:

C. Close and open each circuit breaker to test operation

D. When site conditions permit, energize and de-energize each equipment item served by each drive, testing the complete control sequence of each item including acceleration and deceleration over complete operating range.

E. Operate each adjustable frequency drive with driven equipment at full load and test for hot spots.

F. Test VFD control logic.

G. Test Reports: Furnish detailed test reports of all tests indicating test performed, discrepancies found, and corrective action taken.

H. Manufacturers Field Services Representative: Provide the services of a factory-trained service engineer, specifically trained on the adjustable frequency equipment to assist in installation, start-up, testing, calibration and placement into operation.

I. Provide training for a minimum of 4-hours for up to 10 people.

J. Provide a service engineer at the jobsite as often as necessary until all problems are corrected and the equipment installation and operation are satisfactory.

END OF SECTION

SECTION 16470
GENERAL LIGHTING AND DISTRIBUTION PANELBOARDS

PART 1- GENERAL

1.1 SECTION INCLUDES

A. Furnish and install panelboard(s) as specified herein and where shown on the associated schedules and drawings.

1.2 REFERENCES

A. The panelboard(s) and circuit breaker(s) referenced herein are designed and manufactured according to the latest revision of the following specifications.

1. NEMA PB 1 - Panelboards
2. NEMA PB 1.1 - Instructions for Safe Installation, Operation and Maintenance of Panelboards Rated 600 Volts or Less.
3. NEMA AB 1 - Molded Case Circuit Breakers
4. UL 50 - Enclosures for Electrical Equipment
5. UL 67 – Panelboards
6. UL 489 - Molded-Case Circuit Breakers and Circuit Breaker Enclosures
7. CSA Standard C22.2 No. 29-M1989 - Panelboards and Enclosed Panelboards
8. CSA Standard C22.2 No. 5-M91 - Molded Case Circuit Breakers
9. Federal Specification W-P-115C - Type I Class 1
10. Federal Specification W-C-375B/Gen - Circuit Breakers, Molded Case, Branch Circuit And Service.
11. NFPA 70 - National Electrical Code (NEC)
12. ASTM - American Society of Testing Materials

1.3 SUBMITTAL AND RECORD DOCUMENTATION

A. Approval documents shall include drawings. Drawings shall contain overall panelboard dimensions, interior mounting dimensions, and wiring gutter dimensions. The location of the main, branches, and solid neutral shall be clearly shown. In addition, the drawing shall illustrate one line diagrams with applicable voltage systems.

1.4 QUALIFICATIONS

A. Company specializing in manufacturing of panelboard products with a minimum of fifty (50) years documented experience.

B. Panelboards shall be manufactured in accordance with standards listed Article 1.02 - REFERENCES.

1.5 DELIVERY, STORAGE, AND HANDLING

A. Inspect and report concealed damage to carrier within their required time period.

B. Handle carefully to avoid damage to panelboard internal components, enclosure, and finish.

C. Store in a clean, dry environment. Maintain factory packaging and, if required, provide an additional heavy canvas or heavy plastic cover to protect enclosure(s) from dirt, water, construction debris, and traffic.

1.6 OPERATIONS AND MAINTENANCE MATERIALS

A. Manufacturer shall provide installation instructions and NEMA Standards Publication PB 1.1 - Instructions for Safe Installation, Operation and Maintenance of Panelboards Rated 600 Volts or Less.

1.7 WARRANTY

A. Manufacturer shall warrant specified equipment free from defects in materials and workmanship for the lesser of one (1) year from the date of installation or eighteen (18) months from the date of purchase.

PART 2- PRODUCTS

2.1 MANUFACTURERS

A. Shall be Square D Company NQOD – Class1630 or approved equal.

B. Substitutions must be submitted in writing three weeks prior to original bid date with supporting documentation demonstrating that the alternate manufacturer meets all aspects of the specification herein.

2.2 LIGHTING AND APPLIANCE PANELBOARD TYPE

A. Interior

1. Shall be for 240 Vac/48 Vdc maximum. Continuous main current ratings, as indicated on associated schedules and drawings, not to exceed 600 amperes maximum.
2. Short circuit current rating shall be greater than or equal to that which is deliverable to the panelboard. The contactor shall verify the required AIC rating and supply the properly rated panelboard
3. Provide one (1) continuous bus bar per phase. Each bus bar shall have sequentially phased branch circuit connectors suitable for plug-on or bolt-on branch circuit breakers. The bussing shall be fully rated. Panelboard bus current ratings shall be determined by heat-rise tests conducted in accordance with UL 67. Bussing rated 100-400 amperes shall be plated copper. Bussing rated for 600 amperes shall be plated copper as standard construction. Bus bar plating shall run the entire length of the bus bar. Panelboard's shall be suitable for use as Service Equipment as indicated on the schedules and drawings.
4. All current-carrying parts shall be insulated from ground and phase-to-phase by high dielectric strength thermoplastic.
5. A solidly bonded copper equipment ground bar shall be provided. An additional copper isolated/insulated ground bar shall also be provided.
6. Split solid neutral shall be plated and located in the mains compartment up to 225 amperes so all incoming neutral cable may be of the same length. UL

Listed panelboards with 200% rated solid neutral shall be plated copper for non-linear load applications. Panelboards shall be marked for non-linear load applications.

7. Interior trim shall be of dead-front construction to shield user from energized parts. Dead-front trim shall have pre-formed twistouts covering unused mounting space.
8. Nameplates shall contain system information and catalog number or factory order number. Interior wiring diagram, neutral wiring diagram, UL Listed label and short circuit current rating shall be displayed on the interior or in a booklet format.
9. Interiors shall be field convertible for top or bottom incoming feed. Main circuit breakers in 100A interiors shall be horizontally mounted. Main circuit breakers over 100A shall be vertically mounted. Sub-feed circuit breakers shall be vertically mounted. Main lug interiors up to 400 amperes shall be field convertible to main breaker. Interior leveling provisions shall be provided for flush mounted applications.

B. Main Circuit Breaker

1. Main circuit breakers shall have an over center, trip-free, toggle mechanism which will provide quick-make, quick-break contact action. Circuit breakers shall have a permanent trip unit with thermal and magnetic trip elements in each pole. Each thermal element shall be true rms sensing and be factory calibrated to operate in a 40° C ambient environment. Thermal elements shall be ambient compensating above 40° C.
2. Two and three-pole circuit breakers shall have common tripping of all poles. Circuit breakers frame sizes above 100 amperes shall have a single magnetic trip adjustment located on the front of the circuit breaker that allows the user to simultaneously select the desired trip level of all poles. Circuit breakers shall have a push-to-trip button for maintenance and testing purposes.
3. Breaker handle and faceplate shall indicate rated ampacity. Standard construction circuit breakers shall be UL Listed for reverse connection without restrictive line or load markings.
4. Circuit breaker escutcheon shall have international I/O markings, in addition to standard ON/OFF markings. Circuit breaker handle accessories shall provide provisions for locking handle in the ON or OFF position.
5. Lugs shall be UL Listed to accept solid or stranded copper and aluminum conductors. Lugs shall be suitable for 90° C rated wire, sized according to the 75° C temperature rating per NEC Table 310-16. Lug body shall be bolted in place; snap-in designs are not acceptable.
6. The circuit breakers shall be UL Listed for use with the following accessories: Shunt Trip, Under Voltage Trip, Ground Fault Shunt Trip, Auxiliary Switch, Alarm Switch, Mechanical Lug Kits, and Compression Lug Kits.

C. Branch Circuit Breakers

1. Circuit breakers shall be UL Listed with amperage ratings, interrupting ratings, and number of poles as indicated on the associated [schedules] [drawings].
2. Molded case branch circuit breakers shall have [bolt-on] [plug-on] type bus connectors.

3. Circuit breakers shall have an over center toggle mechanism which will provide quick-make, quick-break contact action. Circuit breakers shall have thermal and magnetic trip elements in each pole. Two- and three-pole circuit breakers shall have common tripping of all poles.
4. There shall be two forms of visible trip indication. The breaker handle shall reside in a position between ON and OFF. In addition, there shall be a red VISI-TRIP® indicator appearing in the clear window of the circuit breaker housing.
5. The exposed faceplates of all branch circuit breakers shall be flush with one another.
6. Lugs shall be UL Listed to accept solid or stranded copper and aluminum conductors. Lugs shall be suitable for 90° C rated wire, sized according to the 75° C temperature rating per NEC Table 310-16.
7. Breakers shall be UL Listed for use with the following factory installed accessories: Shunt Trip, Auxiliary Switch, and Alarm Switch.

D. Enclosures

1. Type 1 Boxes

   a. Boxes shall be galvanized steel constructed in accordance with UL 50 requirements. Galvannealed steel will not be acceptable.
   b. Boxes shall have removable endwalls with knockouts located on one end. Boxes shall have welded interior mounting studs. Interior mounting brackets are not required.

2. Type 1 Fronts

   a. Front shall meet strength and rigidity requirements per UL 50 standards. Front shall have ANSI 49 gray enamel electrodeposited over cleaned phosphatized steel.
   b. Fronts shall be hinged 1-piece with door. Mounting shall be as indicated on associated schedules and drawings.
   c. Panelboards shall have MONO-FLAT fronts with concealed door hinges and mounted with trim screws. Front shall not be removable with the door locked. Doors on front shall have rounded corners and edges shall be free of burrs.
   d. Front shall have cylindrical tumbler type lock with catch and spring-loaded stainless steel door pull. All lock assemblies shall be keyed alike. One (1) key shall be provided with each lock. A clear plastic directory cardholder shall be mounted on the inside of door.

3. Type 3R, 5, and 12

   a. Enclosures shall be constructed in accordance with UL 50 requirements. Enclosures shall be painted with ANSI 49 gray enamel electrodeposited over cleaned phosphatized steel.
   b. All doors shall be gasketed and equipped with a tumbler type vault lock and two (2) additional quarter turn fasteners on enclosures 59 inches or more in height. All lock assemblies shall be keyed alike.

One (1) key shall be provided with each lock. A clear plastic directory cardholder shall be mounted on the inside of door.

c. Maximum enclosure dimensions shall not exceed 21" wide and 6.5" deep.

PART 3- EXECUTION

3.1 INSTALLATION

A. Install panelboards in accordance with manufacturer's written instructions, NEMA PB 1.1 and NEC standards.

3.2 FIELD QUALITY CONTROL

A. Inspect complete installation for physical damage, proper alignment, anchorage, and grounding.

B. Measure steady state load currents at each panelboard feeder; rearrange circuits in the panelboard to balance the phase loads within 20% of each other. Maintain proper phasing for multi-wire branch circuits.

C. Check tightness of bolted connections and circuit breaker connections using calibrated torque wrench or torque screwdriver per manufacturer's written specifications.

END OF SECTION

SECTION 16620
EMERGENCY STANDBY POWER SYSTEM

PART 1- GENERAL

1.1 Standards - NEMA MG1

1.2 A complete emergency standby power system shall be provided including a diesel engine driven generator set and all auxiliary systems required for automatic operation.

1.3 Four sets of operating and maintenance instruction manuals shall be furnished. They shall cover the entire emergency standby power system including the transfer scheme.

1.4 Instruction of Owner personnel in performance of routine maintenance and operation shall be provided.

1.5 Renewal parts and major maintenance shall be readily available through authorized manufacturers dealers located within 100 miles of job site.

1.6 A single manufacturer's dealer shall supply and warrant all equipment for the emergency standby power system. Warranty: 5 year, 2500 hour warranty to cover parts, labor and travel for the full five years. This includes all parts as shipped from the factory but does not include normal maintenance items such as filters, oil and belts, etc.

1.7 Manufacturer of the engine generator set shall be Caterpillar or equal. . The Automatic Transfer Switch shall be provided by the generator manufacturer to provide sole source responsibility.

1.8 The generator set provided under these specifications shall be completely factory assembled and shall be listed and labeled per UL2200.

1.9 The engine generator set provided under these specifications shall comply with applicable EPA emissions requirements. Generator Sets shall be certified EPA Tier 3 Stationary Emergency. It shall be the responsibility of the engine generator supplier to comply with all applicable requirements of the Commonwealth of Virginia and or the authority having jurisdiction (AHJ) where the generator set will be installed.

PART 2- PRODUCTS

2.1 The generator set shall be mounted outside in a sound attenuated weatherproof enclosure with a sub-base diesel fuel tank and shall have a minimum standby rating sufficient to start and run all equipment in the facility not designated as "Standby" or "Spare". The engine shall have a maximum governed speed of 1800 rpm.

2.2 Generators:

A. Waste Water Pump Station: CAT D125-8(C7.1) EPA/T3/LC2014G/SE/LC/125eKW/480-277VAC/3-Phase/60Hz or equal.

B. Water Booster Station: The generator system shall be a CAT D100-8(4.4) EPA/T3/LC2014L/SE/LC/100eKW/480-277VAC/3-Phase/60Hz or equal.

C. Any cost associated with substituting a different model will be the responsibility of the installing electrical contractor.

2.3 The above Generators shall comply with the following:

A. Cooling System designed to operate in 122°F ambient temperatures with an air flow restriction of 0.5 inches of water.

B. Certified copy of generator set standard factory tests shall be provided for the engineers and owners records.

C. Voltage regulation shall be +/- 1.0 percent of rated voltage for any constant load between no load and rated load.

D. The generator set shall be capable of starting the equipment in the facility in multiple steps (not to exceed four). Voltage dip shall not be greater than 15% at any point in the operating cycle. Factory approved voltage dip calculations based on data obtained shall be submitted for review and approval.

E. The generators shall be rated to step load the following sequence:

1. Load Step 1 - On Transfer

a. All Station Loads shown in the electrical drawings except Step-2 Loads.

2. Load Step 2 – the LEAD Main Pump with a PLC controlled adjustable Step Delay via the Panelview (adjustable from 1-600sec., initially set at 30sec intervals).

3. The LAG Main Pump shall be locked out while on generator.

F. Readily accessible voltage droop, voltage level and voltage gain controls shall be provided. Voltage level adjustment shall be a minimum of plus or minus 5 percent.

G. Generator insulation shall be Class H. Temperature rise shall not exceed 105°C over 40°C ambient for continuous operation at the standby rating.

H. Frequency regulation from no load to full load shall be in accordance with governor specification. For any addition of load up to 90 percent of rated load, the frequency shall recover to steady state frequency band within five seconds.

I. Equipment supplier shall furnish printed copy of equipment starting steps to Instrumentation/Controls equipment supplier to insure that the starting steps are included in the control systems.

J. Provide permanent magnet generator or Integrated Voltage Regulator (IVR).

2.4 Diesel Engine shall be Four Cycle

A. All engine ratings shall be shown in manufacturer's literature published at least six months prior to bid opening and engine shall be of a design that has been successfully used for at least three years.

B. Generator shall be driven by a single engine without the use of gearing.

C. Provide a generator mounted engine controller that provide Auto/Start/Stop, Engine Cooldown Timer, Emergency Stop, Engine Cycle Crank, and Programmable cycle timer. Controller indications shall include: Gnerator 3 phase voltage +/- 1% accuracy, RPM, Battery Voltage, Generator AC Current, Generator Frequency, Power metering (kW, kVA, kVAr, pf), Hour Meter (kW-Hours, kVAr-Hours), Engine oil pressure, Engine oil Temperature, Engine Coolant Temperature.

D. Single-Source Supplier: Fully prototype tested generator set. Generator set manufacturer must also make the engine.

2.5 Engine lubrication shall include a forced feed lubricating oil system with wet sump.

A. Provide water cooled lube oil cooler.

B. Provide full flow replaceable oil filters with spring loaded bypass valve to insure oil flow if filter clogs.

2.6 Engine combustion air cleaner shall be dry replaceable element type cleaner.

2.7 Engine fuel system shall be fuel injection type capable of performance on commercial Grade No. 2 fuel oil. Provide primary and secondary fuel filters of replaceable cartridge type. A positive displacement engine mounted fuel pump capable of 12' minimum suction shall be provided. All fuel lines shall have flexible connections and a check valve shall be provided ahead of the fuel pump.

2.8 Engine exhaust system shall include a minimum 18" long flexible steel exhaust connection for each exhaust outlet to muffler. For outdoor units with mufflers bolted to engine or engine housing, flex connection may be omitted.

A. Internally mounted critical silencer shall be provided.

B. For indoor units, mufflers and rigid exhaust pipe shall be insulated with calcium silicate suitable for temperatures up to 1000°F. Flexible connection shall have screen guard for protection of operating personnel.

C. For outdoor units, mufflers mounted on top of the weatherproof enclosure shall be shielded with formed expanded metal guards for protection of operating personnel.

D. Provide a threaded drain hole.

E. Diesel exhaust system piping shall be extra heavy black steel (schedule 80). Fitting shall be standard weight forged steel with beveled ends.

2.9 Engine governor shall be speed droop type which shall control the frequency within 3 pct of rated frequency from no load to full load. The frequency at any constant load shall remain within a steady state band width of plus or minus 0.33 pct of rated frequency.

2.10 Provide a thermostatically controlled jacket water heater to maintain proper generator starting conditions at ambient temperatures as low as -20°F. Heater voltage shall be suitable for circuit voltage shown on Contract Drawings.

2.11 Radiator shall be engine mounted and cooled by blower fan. Fan belts shall have tension adjustment. The radiator shall be capable of cooling the engine at its standby load ratings and 110°F ambient air temperature. The radiator shall be filled with ethylene glycol and water solution to protect to -20°F and shall include a cooling system rust inhibitor. All cooling system gaskets shall be suitable for use with ethylene glycol.

2.12 Provide engine driven centrifugal type water circulating pump and thermostatic valve to maintain engine at recommended temperature level.

2.13 Provide a thermostatically controlled heater in the generator to prevent condensation. Heater shall be suitable for circuit voltage shown on Contract Drawings.

2.14 Generator controls and main output circuit breaker shall be mounted on the generator.

A. The controls shall include the following meters and relays:

1. A.C. voltmeter

2. A.C. ammeter

3. Frequency meter

4. Running time meter

5. S.P.D.T. contacts that operate on failure of engine to run when "called for."

B. The controls shall include the following alarms which shall light an individual indicating lamp for each alarm condition and shall stop and lockout the unit. Lockout shall require manual reset.

1. Over-crank

2. Low oil pressure

3. High water temperature

4. Low Coolant Water Level

5. Over-speed

6. "Not In Automatic" alarm light

7. Auxiliary S.P.D.T. contact to indicate alarm condition (for use with plant enunciator system).

8. Indicator/Display lamp test switch to permit checking indicator and display lamps.

C. Starting and stopping controls shall be activated by contacts located in the transfer switch.

D. Output circuit breaker shall be installed inside of the weatherproof housing. The breaker shall be rated for generator full load amps and shall be of the molded case type and shall include a 12Vdc shunt trip.

2.15 Engine-generator set shall be provided with factory pad type vibration isolator between the frame and the generator components and must be IBC and seismic Zone-4 Certified.

2.16 Engine starting shall be electrically powered from lead-acid storage batteries, having voltage rating and ampere hour minimum capacity ratings recommended by the manufacturer to provide 120 seconds of cranking at an ambient temperature of 40°F. Provide batteries, battery rack, cables and a U/L listed automatic battery charger with automatic two rate charging that will provide recharge from 0 volts to full charge in 8 hours. Charger shall have 120 volt single phase input, ammeter, voltmeter and suitable enclosure. In addition to battery charger, an engine driven battery charging alternator shall be factory installed with required guards. Alternator shall be rated minimum of 24 volts and 45 amperes.

2.17 Finish paint coat of engine generator set, accessories and auxiliary equipment shall be standard factory color.

2.18 Sub-Base Diesel Fuel Tank

A. Provide a **Double-walled, UL 142 listed, fuel tank,** mounted under the base of the

generator set. Capacity of the tank shall be rated for 48-Hours at 75% loaded. Bolt tank to the generator set base. Tank to be shipped to the jobsite connected to the generator as one piece.

B. Fuel fill cap and level indicator accessible from outside of generator.

C. Provide a 5-Gallon Over-Spill Kit on fuel fill inlet – external to generator.

D. Provide Low, High and Leak detection alarms and floats.

E. Equip tank with conduit space beneath the circuit breakers for cable runs.

2.19 Automatic Transfer Switch (ATS) shall be the delayed transition type.

A. ATS Ratings:

1. Waste Water Pump Station: The ATS shall be 400Amp/3-Pole at 480-277VAC/3-Phase/4-Wire/60Hz.

2. Water Booster Station: The ATS shall be 200Amp/3-Pole at 480-277VAC/3-Phase/4-Wire/60Hz.

B. The transfer function shall be accomplished as follows:

1. The transfer of load shall be initiated by a drop of any phase of normal supply voltage below 70 pct. of rated voltage.

2. Provide adjustable time delay in order to over-ride momentary power outages or fluctuations. Set delay at 20 seconds.

3. Load transfer to the generator shall occur only after the generator has attained at least 90 pct. of rated voltage and 95 pct. of rated frequency.

4. The total elapsed time between the loss of normal supply voltage and the transfer of load to the generator shall not exceed 30 seconds.

5. The load shall be transferred back to the normal supply when the voltage of

each phase of the normal supply has continuously remained above 90 pct. of rated voltage for 6-60 seconds, adjustable.

6. To stagger motor starting provide a load disconnect control circuit consisting of 3 sets of single pole, double throw contacts that operate 3 seconds before transfer in either direction, and reset sequentially after operation of the switch, with an equal time between load contact operation. Controls, adjustable 2-60 seconds shall be provided. Contacts shall be rated 10 amps at 480 VAC.

7. The engine shall be stopped after a cool-down run following load transfer to the normal source, length of cool-down run shall be determined by engine manufacturer.

C. The switch shall be equipped with spare auxiliary relay contacts, 1 n.o., 1 n.c. that transfer when the normal source is energized or de-energized.

D. Switch shall be equipped with an auxiliary relay having S.P.D.T. contacts to indicate "Emergency Power Available."

E. Switch shall be equipped with an auxiliary relay having S.P.D.T. contacts to indicate "Normal Power Available."

F. The switch shall be equipped with five (5) auxiliary contacts; the contacts to open when the switch is in the emergency position.

G. Provide a time clock to automatically initiate exercising the engine as recommended by the engine manufacturer.

H. Ampere rating shall be continuous with the switch installed in an unventilated enclosure. The thermal capacity of the main contacts shall be not less than 20 times the continuous rating, for a minimum of 3 cycles.

I. WCR Ratings:

1. When coordinated with molded case circuit breakers, the minimum withstand and closing rating (WCR) shall be as follows, for a minimum of 3 electrical cycles. WCR rating of the By-Pass Isolation switch shall be equal to the ATS.

a. Amperage 3 Cycle Rating (UL1008)

1)	0-100A	22,000 Symmetrical
2)	101-399A	30,000
3)	400-599A	35,000
4)	600-1599A	50,000
5)	1600-3000A	100,000

2. ATS shall also be rated for 200,000 WCR when coordinated with current limiting fuses, regardless of ampere rating.

J. Transfer switch and all accessories shall be front accessible.

K. Switch shall be complete with:

1. Ammeter, voltmeter and selector switches to monitor all three phases of the load side of the switch.

2. Separate ammeter (and associated C.T.'s) and selector switch. Meter and switch shall be suitable for remote installation as indicated.

3. Pilot lights to indicate switch position (normal or emergency).

4. A pause-in-neutral feature shall be provided with an adjustable time period and shall be effective during switch operation in either direction.

L. The ATS shall be ASCO 300 Series (or equal) in a NEMA-3R enclosure.

2.20 Generator set shall be tested at the factory with a 0.8 Power Factor Test and provide testing reports to engineer. On Site: Provide resistive load bank test per NFPA-100. Load banks shall be furnished by the generator set supplier. After Load Bank Testing, provide site load tests to pump station capacity.

A. Site Tests: An installation check, start up, a load bank test and a station load test shall be performed by the manufacturer's local representative in the presence of the owner and the engineer. The engineer, regular operators, and the maintenance staff shall be notified one week in advance of the time and date of the site test. The contractor is responsible for providing all fuel required for testing filling the tank upon acceptance

by the owner.

B. Fuel, lubricating oil, and antifreeze shall be checked for conformity to the manufacturer's recommendations under the environmental conditions present and expected.

C. Accessories that normally function while the set is standing by shall be checked prior to cranking the engine. This shall include: engine heaters, battery charger, generator strip heaters, remote enunciator, etc.

D. Start up under test mode to check for exhaust leaks, path of exhaust gases outside the building, cooling air flow, movement during starting and stopping, vibration during running, normal and emergency line to line voltage and phase rotation.

E. Automatic start up by means of simulated power outage to test remote automatic starting, transfer of the load, and automatic shutdown. Prior to this test, all transfer switch timers shall be adjusted for proper systems coordination. Engine temperature, oil pressure and battery charge level along with generator voltage, amperes, and frequency shall be monitored throughout the test.

F. During each test, data shall be tabulated at 30 minute intervals for the following:

1. Voltage - each phase

2. Amperage - each phase

3. Frequency

4. Power factor

5. Cooling water temperature

6. Exhaust gas temperature

7. Oil pressure

8. Ambient temperature

G. Results of all tests shall be submitted to the Engineer for approval prior to final acceptance of the equipment and installation.

H. All fuel and other consumables required for this test when performed on site shall be provided by the Contractor. Fuel tank shall be filled to capacity prior to acceptance of installation by Owner.

2.21 MONITORING POINTS

A. Make available monitoring points (I/Os) as indicated on Drawings.

PART 3- EXECUTION

3.1 The generator, fuel tank and all associated equipment shall be installed and tested according to current installation instructions provided by each manufacturer.

3.2 The equipment shall be installed where shown on the plans and in accordance with the manufacturer's recommendations and all applicable codes.

END OF SECTION

APPENDIX A:
VUSBC STATEMENT OF SPECIAL INSPECTIONS

STATEMENT OF STRUCTURAL & SPECIAL INSPECTIONS

2012 Code Version
(Revised 12/14)

HECO-6a

DATE: 4/25/2017

PROJECT TITLE: Fluvanna County - Zion Crossroads Water Booster Pump Station and Wastewater Pump Station

PROJECT/PIMS CODE: Dewberry Project Number: 50078863 / 50078864

A/E OF RECORD: Dewberry Engineers Inc.

The following firms and/or individuals (with address and telephone number shown) are designated to perform the Structural & Special Inspections designated below. The firm/individual has the experience, qualifications, certifications and/or licenses required to perform the functions indicated.

TESTING AND INSPECTION SERVICE

	SPECIAL INSPECTOR & TEST LAB		A/E OF RECORD INSPECTION MANAGER		SMOKE CONTROL TESTING & INSPECTION
Name:		Name:		Name:	
Address:		Address:		Address:	
City/St/Zip		City/St/Zip		City/St/Zip	
Phone:		Phone:		Phone:	

Inspection and/or Testing responsibilities are indicated on the attached list Structural & Special Inspections Schedule, Form HECO-6b. Copies of all test data and reports shall be provided to the A/E of Record and to the University's Project Manager on a timely basis. The Contractor shall be notified of all deficiencies and discrepancies in a timely manner so that corrective action can be taken.

PROFESSIONAL OVERSIGHT AND CERTIFICATION

	STRUCTURAL ENGINEER OF RECORD		A/E of RECORD		SMOKE CONTROL RDP
Name:	Joseph Wolhar, PE	Name:		Name:	
Address:	2610 Wycliff Rd., Suite 410	Address:		Address:	
City/St/Zip	Raleigh, NC 27607	City/St/Zip		City/St/Zip	
Phone:	919.881.9939	Phone:		Phone:	
	(Signature) *(Date)*		*(Signature)* *(Date)*		*(Signature)* *(Date)*

CODE OFFICIAL'S ACCEPTANCE

☐ Acceptable as submitted
☐ Acceptable as marked

Comments:

By: _____
For or By Director *(Date)*
Division of Engineering & Buildings

Attachment: CO-6b List of Special Inspections

2012 VUSBC SPECIAL INSPECTIONS

HECO-6b

2012 Code Version (Revised 12/14) **Project Title: Fluvanna County - Department of Public Works - Zion Crossroads Water Booster Pump Station and Wastewater Pump Station**

MATERIAL/ ACTIVITY	TYPE OF INSPECTION (A/E add lines as needed to identify other required items)	REQ'D THIS PROJ ?	REFERENCE	INSPECTION / TEST BY *				
				OWNER'S TEST LAB	A/E OF RECORD	SMOKE CONTROL	PROJECT INSPECTOR	CONTRACTOR / SUPPLIER
FOUNDATIONS								
Soil	Classify & Test Existing Soils & Fill Materials	Yes	Specs, 1705.6	X (Spot)				
Soil	Compaction Of Fill Materials	Yes	Specs, 1705.6	X				
Soil	Bearing At Bottom Of Footing Excavations	Yes	Specs, 1705.6	X (Spot)				
Piles	Driving Records, Tip & Cutoff Elevations		1705.7, 1705.9	X	4			
Piles	Load Test		1705.7	X	4			
Caissons	Drilling, Size, Bearing Conditions, Materials		1705.8, 1705.3	X				
CONCRETE CONSTRUCTION								
Concrete	Ready-Mix Plant Quality Control	Yes	Specs, 1704.2.5		2			X, 1
Concrete	Mix Design Tests And Certificates	Yes	Specs, 1705.3		X			X, 1
Reinf. Steel	Shop Drawings Of Reinforcing Steel	Yes	Specs		X			
Reinf. Steel	Placement Of Reinforcing Steel	Yes	1705.3	X (Spot)	X (Spot)		X	
Reinf. Steel	Welding		1705.2.2	X (Spot)	2			X,1
Formwork	Shape, Location, Dimensions	Yes	1705.3	X (Spot)			X	X
Formwork	Removal and Reshoring		1705.3	X (Spot)				
Concrete	Test Cylinders & Strength Test	Yes	1705.3, 1910.10	X	4			
Concrete	Mix Proportions & Mix On Delivery Tickets	Yes	1705.3				X (Spot)	
Concrete	Slump Test	Yes	1705.3	X	4		X	
Concrete	Placement Procedures	Yes	1705.3	X	X (Spot)		X (Spot)	
Concrete	Curing Temperatures & Techniques	Yes	1705.3	X			X	
Prestressed	Prestressing Procedures & Forces		1705.3	X	2			X,1
Prestressed	Shop Drawings Of Prestressed Units		Specs		X			
Precast	Quality Control Of Manufacturer	Yes	1704.2.5		2			X, 1
Precast	Shop Drawings Of Precast	Yes	Specs		X			
Precast	Erection Of Precast	Yes	1705.3	X (Spot)	X (Spot)		X	X
Precast	Inspection Of Connections	Yes	1705.3	X (Spot)				
Anchors	Anchors Cast In Concrete	Yes	Specs, 1705.2.1, 1909	X (Spot)				
Anchors	Post Installed (Mechanical & Adhesive)	Yes	033000 Spec				X (Spot)	

2012 VUSBC SPECIAL INSPECTIONS

HECO-6b

2012 Code Version (Revised 12/14) **Project Title: Fluvanna County - Department of Public Works - Zion Crossroads Water Booster Pump Station and Wastewater Pump Station**

MATERIAL/ ACTIVITY	TYPE OF INSPECTION (A/E add lines as needed to identify other required items)	REQ'D THIS PROJ ?	REFERENCE	INSPECTION / TEST BY *				
				OWNER'S TEST LAB	A/E OF RECORD	SMOKE CONTROL	PROJECT INSPECTOR	CONTRACTOR / SUPPLIER
MASONRY CONSTRUCTION								
Quality Assurance	Indicate Quality Assurance Level (A, B or C)	B	ACI 530, 1.19.1, 2, 3		X			
Clay Masonry	Certificates, Tests & Technical Data	Yes	ACI 530, Table 1.19.1	X (Spot)	X			3
Concrete Masonry	Certificates, Tests & Technical Data	Yes	ACI 530, Table 1.19.1	X (Spot)	X			3
Reinf. Steel	Shop Drawings	Yes	Specs		X			
Reinf. Steel	Size, Grade, Type, Location, Spacing Of Reinf Steel	Yes	ACI 530, Table 1.19.1	X (Spot)				
Anchors	Manufacturer's Data	Yes	ACI 530, Table 1.19.1	X (Spot)	X			3
Accessories	Manufacturer's Data	Yes	Specs		X			3
Mortar & Grout	Mix Design And Data	Yes	Specs		X			3
Mortar & Grout	Field Samples	Yes	ACI 530, Table 1.19.1	X (Spot)	4			
Risk Cat. IV	A/E Shall edit list as required by ACI 530		Tables 1.19.2, 1.19.3		X			
STEEL CONSTRUCTION								
Fabricator	Quality Control Inspection Of Shop		1704.2.5		2			X, 1
Fasteners	Mfr's Certificate Of Compliance	Yes	AISC 360-10		2			3
Struct. Steel	Mfr's Certificate Of Compliance	Yes	AISC 360-10		2			3
Weld Matl's	Manufacturer's Certificate Of Compliance	Yes	AISC 360-10		2			3
Metal Decking	Welding to Supports	Yes	1705.2.2	X (Spot)				
Metal Decking	Manufacturer's Certificate Of Compliance	Yes	1705.2.2		2			3
Details	Shop Drawings Review	Yes	Specs		X			
Erection	Installation Of High-Strength Bolts		AISC 360-10	X (Spot)				
Erection	Welding	Yes	AISC 360-10	X (Spot)				
Erection	Steel Framing And Connections		AISC 360-10	X (Spot)	X (Spot)		X	
Grout	Installation of High-Strength Non-Shrink Grout	Yes	1705.2	X (Spot)				

2012 VUSBC SPECIAL INSPECTIONS

HECO-6b

2012 Code Version (Revised 12/14) **Project Title: Fluvanna County - Department of Public Works - Zion Crossroads Water Booster Pump Station and Wastewater Pump Station**

MATERIAL/ ACTIVITY	TYPE OF INSPECTION (A/E add lines as needed to identify other required items)	REQ'D THIS PROJ ?	REFERENCE	INSPECTION / TEST BY *				
				OWNER'S TEST LAB	A/E OF RECORD	SMOKE CONTROL	PROJECT INSPECTOR	CONTRACTOR / SUPPLIER
SEISMIC FORCE RESISTANCE INSPECTIONS (as required by VUSBC 1705.11)								
	(Note: SDC refers to Seismic Design Category.)							
Structural Steel	Welding and Bolting		1705.11.1	X (Spot)				
Wood	Field Glueing		1705.11.2	X				
Wood	Fastening Of Seismic Force Resistance System		1705.11.2	X (Spot)			X	
Light Gage Steel	Fastening		1705.11.3	X (Spot)			X	
Components	Mechanical & Electrical - Anchorage and Labeling (SDC = C)		1705.11.4, 1705.11.6	X (Spot)				
Components	Architectural - Cladding, Veneer, Non-Bearing Walls (SDC = D)		1705.11.5	X (Spot)				
Components	Access Floors (SDC = D)		1705.11.5.1	X (Spot)				
Components	Storage Racks (SDC = D)		1705.11.7	X (Spot)				
SEISMIC RESISTANCE TESTING (as required by VUSBC 1705.12)								
Concrete	Reinforcing Steel (SDC=B)		1705.12.1		2			3
WOOD & LIGHT GAGE STEEL CONSTRUCTION								
Fabrication	Quality Control Inspection Of Shop	Yes	1704.2.5		2			X, 1
Wood	Grade Stamp	Yes	Specs, 1703.5		X (Spot)		X	
Wood/Light Gage	Fastening Per Code And Drawings	Yes	1705.2.2.1.1, 1705.5.1		X (Spot)		X	
Trusses	Shop Drawings	Yes	Specs		X			
Trusses	Truss Placement, Bracing and Fastening & Anchorage	Yes	Specs, 1705.5.2		X (Spot)		X	
Laminates	Shop Drawings		Specs		X			
Laminates	Identification Per Shop Drawings		Specs		X (Spot)		X	
Sheathing	Grade Stamp, Thickness & Fastening	Yes	Specs, 1705.5.1	X	X (Spot)		X	

2012 VUSBC SPECIAL INSPECTIONS

HECO-6b

2012 Code Version (Revised 12/14) **Project Title: Fluvanna County - Department of Public Works - Zion Crossroads Water Booster Pump Station and Wastewater Pump Station**

MATERIAL/ ACTIVITY	TYPE OF INSPECTION (A/E add lines as needed to identify other required items)	REQ'D THIS PROJ ?	REFERENCE	INSPECTION / TEST BY *				
				OWNER'S TEST LAB	A/E OF RECORD	SMOKE CONTROL	PROJECT INSPECTOR	CONTRACTOR / SUPPLIER
FIREPROOFING								
Spray-on	Manufacturer's Data		Specs		X			3
Spray-on	Surface Conditions		1705.13.2	X				
Spray-on	Application		1705.13.3	X				3
Spray-on	Thickness		1705.13.4	X				
Spray-on	Density		1705.13.5	X				
Spray-on	Bond Strength		1705.13.6	X				
Mastic/Intumescent	Fire-Resistant Coatings - Materials, Application		1705.14	X	X (Spot)		X	3
GWB Fireproof	Manufacturer's Data		Specs		X			3
GWB Fireproof	Placement Of Materials		Specs		X (Spot)		X	
Fire Wall Assembly	Manufacturer's Data		Specs, 706.2		X			3
Fire Wall Assembly	Placement Of Materials		Specs, 706.2		X (Spot)		X	
EXTERIOR INSULATION & FINISH SYSTEMS (EIFS)								
Materials	Manufacturer's Data	Yes	Specs		X			3
Preparation	Condition Of Substrate	Yes	Specs, 1705.15.1		X (Spot)		X	
Application	Methods, Proportions & Thickness Of Installation	Yes	Specs, 1705.15.1	X (Spot)	X (Spot)		X	
SMOKE CONTROL (see note 5)								
Ducts	Device Location And Air Duct Leakage		1705.17.1			X		
System	Pressure Difference, Flow Measurements & Detection Testing		1705.17.1			X		
Controls	Activation Sequence		1705.17.1			X		

2012 VUSBC SPECIAL INSPECTIONS

2012 Code Version
(Revised 12/14)

Project Title: Fluvanna County - Department of Public Works - Zion Crossroads Water Booster Pump Station and Wastewater Pump Station

MATERIAL/ ACTIVITY	TYPE OF INSPECTION (A/E add lines as needed to identify other required items)	REQ'D THIS PROJ ?	REFERENCE	INSPECTION / TEST BY *				
				OWNER'S TEST LAB	A/E OF RECORD	SMOKE CONTROL	PROJECT INSPECTOR	CONTRACTOR / SUPPLIER

NOTES:

1. Fabricator, supplier, ready-mixed plant or other production plant shall provide certificates from an approved independent inspection, testing or quality assurance agency attesting that the plant meets at least one of the following criteria:
   a. The plant is a certified production plant meeting the quality assurance standards of a recognized national standards organization for that product.
   b. The plant maintains an agreement with an independent inspection or quality assurance agency to conduct periodic in-plant quality assurance inspections. The frequency of these inspections shall not be less than one every six months.
   c. The plant has an in-shop quality assurance inspection program by an independent testing or quality assurance agency for the work/product to be provided on this project.
2. A/E shall review fabricator/supplier/producer certificates for conformance with appropriate standards of practice and quality assurance.
3. Contractor/supplier shall submit manufacturer's certificates of compliance for the materials/products.
4. Reviews records and test results for conformance with requirements.
5. Special Inspection firm shall have expertise in fire protection engineering, mechanical engineering, and certification as an air balancer. The special inspector listed on the cover page and the Agency are responsible for verifying that the inspector (s) for smoke control is qualified as required by VUSBC 1705.17.2.
6. Unless noted otherwise, the reference numbers listed refer to the 2012 VUSBC.

APPENDIX B:
GEOTECHNICAL ENGINEERING REPORTS

GEOTECHNICAL ENGINEERING REPORT

Zion Crossroads Water and Sewer System
Wastewater Pump Station
Route 250 and Route 15
Fluvanna County, Virginia

Schnabel Reference: 16C13175 Task 03
March 23, 2017

Prepared For:
Dewberry Engineers, Inc.

Dewberry

Schnabel ENGINEERING

Schnabel
ENGINEERING

March 23, 2017

Ms. Melanie Leckey, PE
Dewberry Engineers, Inc.
4805 Lake Brook Drive, Suite 200
Glen Allen, VA 23060

Subject: **Geotechnical Engineering Report, Zion Crossroads Water and Sewer System, Wastewater Pump Station, Route 250 and Route 15, Fluvanna County, Virginia (Schnabel Reference 16C13175 Task 03)**

Dear Ms. Leckey:

SCHNABEL ENGINEERING, LLC (Schnabel) is pleased to submit our geotechnical engineering report for the wastewater pump station included in this project. This study was performed in accordance with our revised proposal dated September 28, 2015, as authorized by your office on December 14, 2016.

SITE AND PROJECT DESCRIPTION

The Zion Crossroads Water and Sewer System includes a series of water and sewer infrastructure additions and upgrades. These upgrades include approximately 23,000 lf of 10" diameter sewer force main, approximately 18,000 lf of 12" diameter waterline, a new water booster station, a new wastewater pump station, and a new elevated water storage tank.

The proposed location of the wastewater pump station is south of the intersection of Route 250 and Route 15, west of Route 15 and south of Starlite Park. The area consists of an open field adjacent and south of an existing stormwater pond. Existing elevations are about EL 505 at Route 15, sloping up to 515 ft at the north and west sides of the site. A Site Vicinity Map is included as Figure 1.

Proposed for construction is a wastewater pump station, which will include a pre-cast concrete control building, a precast concrete wet well, a generator and pad, and required piping. A slab-on-grade with turn-downs will support the control building, with a finished floor elevation of about EL 509 ft. The bottom of the wet well will be about EL 487 ft.

We obtained the project information from a review of the Request For Proposal (RFP) documents, the Phase 1 Sewer System site plans and Phase 1 Water System site plans by Dewberry, preliminary wastewater pump station drawings by Dewberry, through communication with your office, and through our site visits.

SUBSURFACE EXPLORATION AND LABORATORY TESTING PROGRAM

We performed a subsurface exploration and field testing program to identify the subsurface stratigraphy underlying the site and to evaluate the geotechnical properties of the materials encountered. This program included test borings. Exploration methods used are discussed below. The appendices contain the results of our exploration.

Subsurface Exploration Methods

Test Borings

Schnabel's subcontractor, Ayers and Ayers, Inc. drilled three test borings under our observation on March 6, 2017. The Standard Penetration Test (SPT) was performed at selected depths in the borings. Appendix A includes specific observations, remarks, and logs for the borings; classification criteria; drilling methods; and sampling protocols. Figure 2, included at the end of this report, indicates the approximate test boring locations. We will retain soil samples up to 45 days beyond the issuance of this report, unless you request other disposition.

Soil Laboratory Testing

Our laboratory performed tests on selected samples collected during the subsurface exploration. The testing aided in the classification of materials encountered in the subsurface exploration and provided data for use in the development of recommendations for design of foundations, earthwork, and pavements. The results of the laboratory tests are included in Appendix B and are summarized for each stratum in the Site Geology and Subsurface Conditions section of this report. Selected test results are also shown on the boring logs in Appendix A.

Index Testing

We performed index testing on samples collected as part of the exploration to provide soil classifications and to provide parameters for use with published correlations with soil properties. Index testing included performing natural moisture content, Atterberg Limits, and gradation tests on three jar samples and one bulk sample of soil representing Stratum C1.

Compaction and CBR Testing

We performed Standard Proctor compaction and CBR testing to evaluate compaction characteristics and to provide soil parameters for pavement design. Testing was performed on a bulk sample representing Stratum C1.

SITE GEOLOGY AND SUBSURFACE CONDITIONS

Site Geology

We reviewed existing geologic data and information in our files. Based on this review, the geologic stratigraphy consists of existing fill or cultivated soils overlying residual soils. Residual soils are derived through the in-place physical and chemical weathering of the underlying rock. The underlying parent rock consists of metagraywacke, quartzose schist, and mélange of Cambrian to late Proterozoic age.

©2017 All Rights Reserved

Generalized Subsurface Stratigraphy

We characterized the following generalized subsurface stratigraphy based on the exploration and laboratory test data included in the appendices.

Ground Cover:

All borings encountered a layer of rootmat and topsoil at the ground surface with a depth of about 3 to 4 inches.

Stratum A: Existing Fill

Below the surface layer, Boring B-90 encountered existing fill consisting of Silty Sand (SM) with root fragments and glass fragments to a depth of 2 ft. The fill soils were of low plasticity. Based on the Standard Penetration Tests performed, the density of this stratum is loose, with an N value of 4.

Stratum C1: Fine-Grained Residuum

The borings encountered residual soils below the ground cover or existing fill of Stratum A. Fine-grained residual soils of Stratum C1 consisted of silt (ML) and elastic silt (MH) with varying amounts of sand. These soils were generally observed to have moderate to high plasticity. Four samples were tested to have liquid limits varying between 42 and 82, with plasticity indices from 5 to 45. The natural moisture contents measured varied from about 25 to 38 percent, with an average of 29 percent. Based on the Standard Penetration Tests performed, the fine-grained soils of this stratum are generally stiff to very stiff consistency, with N values of 3 to 28.

We performed a Standard Proctor Compaction test and a CBR test on a bulk sample representing Stratum C1. The sample consisted of silt with sand, and classified (ML)/(A-5) in accordance with ASTM and AASHTO classification systems. The compaction test resulted in a maximum dry density of 106.5 pcf at an optimum moisture content of 16.4 percent. Natural moisture content values of Stratum C1 soils tested in our laboratory varied from 7 to 22 percent above the optimum value. We obtained a laboratory CBR value of 1.1 with a swell value of 6.0 percent for this sample.

Laboratory tests performed on samples representing Stratum C1 indicate these soils exhibit a medium to high potential for moisture-related volume change (shrink/swell behavior).

Stratum C2: Coarse-Grained Residuum

Coarse-grained residual soils of Stratum C2 consisted of silty sand (SM). These soils were generally observed to have low to moderate plasticity. The natural moisture contents measured were 25 and 28 percent. Based on the Standard Penetration Tests performed, the coarse-grained residual soils are generally medium dense, with N values of 5 to 27.

Groundwater

We observed groundwater in each boring. Groundwater was observed at depths varying from 10 to 19 ft, about EL 488 to 497 ft, during drilling. The test boring logs in Appendix A include groundwater

©2017 All Rights Reserved

observations obtained during our subsurface exploration. These data include depths to groundwater encountered during drilling, upon drilling completion, and following completion of the boring.

Schnabel's drilling subcontractor installed a temporary water observation well in Boring B-89. We observed groundwater in this well at a depth of 3.9 ft, about EL 503 ft, 14 days after completion of the boring. We did not obtain long-term water level readings in the remaining borings since we backfilled them upon completion for safety. The remaining borings caved dry at depths of 4 and 5 ft.

Based on our groundwater observations, we expect groundwater will be encountered in the excavation for the wet well, and possibly even utility excavations. Recommendations to address the impact of groundwater are discussed in subsequent sections.

The groundwater levels on the logs indicate our estimate of the hydrostatic water table at the time of our subsurface exploration. The final design should anticipate the fluctuation of the hydrostatic water table depending on variations in precipitation, surface runoff, pumping, evaporation, leaking utilities, stream levels, and similar factors.

Seismic Site Classification

We evaluated the Seismic Site Class for this project according to the International Building Code (IBC) Section 1615 (2012). Our analysis indicates Site Class D for this location. This Site Class was evaluated based on observed and extrapolated SPT values.

GEOTECHNICAL RECOMMENDATIONS

We based our geotechnical engineering analysis on the information developed from our subsurface exploration and soil laboratory testing, along with the project development plans, site plans, and structural drawings furnished to our office. We recommend shallow foundations for support of the proposed wastewater pump station based on our analysis. The following sections of the report provide our detailed recommendations.

Site Grading and Earthwork

We anticipate proposed site grades will require cut and fill placement of less than 2 ft, but a cut of about 20 ft will be required for the installation of the wet well. Trench excavations will be required for associated utilities. Recommendations for compacted fill subgrade preparation, fill soil requirements, and placement and compaction criteria are presented in subsequent sections.

Compacted Fill Subgrades

Subgrades to receive compacted structural fill for structure or pavement support should be stripped of vegetation, topsoil, and organic matter. Schnabel's subsurface exploration indicated topsoil to depths of about 4 inches below the ground surface. However, stripping typically results in some disturbance and contamination of near-surface soils, particularly during periods of wet weather. Therefore, we recommend a topsoil stripping depth of 6 inches be considered for the site during the project planning.

©2017 All Rights Reserved

Compacted structural fill subgrades should consist of suitable soils of Stratum C1 or C2. These soils are expected to be encountered at shallow depths beneath the topsoil and root mat and existing fill soils of Stratum A.

The Geotechnical Engineer should evaluate the suitability of the fill subgrades. The stripped subgrades should be proofrolled with a loaded dump truck to evaluate the subgrade suitability for support of the compacted structural fill prior to any undercutting or initiation of fill placement. Areas that exhibit excessive pumping, weaving, or rutting should be scarified, dried and recompacted, or undercut and replaced with compacted structural fill as recommended by the Geotechnical Engineer. Subgrade evaluation techniques complementary to proofrolling could include a combination of probing with a penetrometer, drilling hand augers, or observing test pits.

If stripping and earthwork operations are performed during an extended period of warm, dry weather, the non-organic portions of the undercut materials may be reused as compacted structural fill. The use of these materials as compacted structural fill will depend on the soil moisture content, and the Contractor's ability to limit contamination of these materials with organic matter during stripping and undercutting. The Contractor may need to scarify and dry these soils to achieve adequate compaction.

When removal of unsuitable materials is required, the excavation should be performed in a manner to limit disturbance of the underlying suitable material. The excavation should be performed under the observation of the Geotechnical Engineer to evaluate required excavation depths.

Undercut volumes should be evaluated by cross sectioning. Other methods of calculating volumes of undercut, such as counting trucks, are less accurate and generally result in additional expense.

Compacted structural fill subgrades should be kept free of ponded water. Compacted structural fill subgrades should also be free of snow, ice, and frozen soils. If snow, ice, or frozen soils are present at subgrade levels, these materials should be removed as recommended by the Geotechnical Engineer.

Compacted structural fill subgrades should not be steeper than about 4H:1V. If steeper slopes are present, subgrades should be benched to permit placement of horizontal lifts of fill.

Compacted Fill

Compacted structural fill and backfill should consist of non-organic on-site soils. If off-site borrow materials are needed, these soils should classify CL, ML, SC, SM, SP, SW, GC, GM, GP, or GW according to ASTM D2487. Fill materials should not contain particles larger than 3 inches.

Compacted structural fill should be placed in maximum 8-inch thick horizontal, loose lifts. Fill should be compacted to at least 95 percent of the maximum dry density per ASTM D698 (Standard Proctor).

Backfill placed in excavations, trenches, and other areas that large compaction equipment cannot access should be placed in maximum 6-inch thick lifts. Backfill should meet the material, placement, and compaction requirements outlined above.

Successful re-use of the excavated, on-site soils as compacted structural fill will depend on their natural moisture contents during excavation. Laboratory test results indicate soils encountered in proposed

©2017 All Rights Reserved

borrow areas are wet of the optimum moisture content. Scarifying and drying of these soils should be anticipated to achieve the recommended compaction. Drying of these soils will likely result in some delays, and may not be possible during cooler, wetter weather. We recommend that the earthwork be performed during the warmer, drier times of the year.

Shallow Foundations

We consider shallow foundations suitable for support of the proposed control building and wet well. Foundations should be supported on suitable natural soils of Strata C1 and C2. We recommend that foundations supported on suitable natural soils of Strata C1 and C2 be designed for a net allowable soil bearing pressure of 3,000 psf. This bearing pressure provides a factor of safety against general bearing capacity failure of at least 3.0.

The above allowable soil bearing pressure may be increased by 33 percent for wind and seismic loads when used in conjunction with load combinations defined in IBC 2012 Section 1605.3.2, Alternative Basic Load Combinations for use with allowable stress design. This increase is not applicable for other allowable stress load combinations, strength design, or load and resistance factor design.

All foundation subgrades should be observed by the Geotechnical Engineer prior to placement of concrete to evaluate if subgrade materials are as anticipated. If unsuitable soils are encountered at the design bearing grade, these soils should be removed and replaced as recommended by the Geotechnical Engineer. Unsuitable soils should be replaced with dense graded aggregate, controlled low strength material (CLSM), or concrete.

Settlements of foundations supported on suitable natural soils and on properly placed compacted structural fill are not expected to exceed about 1 inches. Differential settlements between similarly loaded foundations are not expected to exceed about half this value.

A modulus of subgrade reaction, k, of 100 pci should be used in the design of mat foundations and slabs. The recommended modulus value is for a 1-ft-square plate. Some design software may consider different definitions of k for input. The Structural Engineer should contact our office if their software considers a different definition of k.

A four-inch crushed stone or washed gravel capillary moisture barrier should underlie floor slabs on grade. Moisture barrier material should consist of VDOT No. 57 crushed stone. The Contractor should compact the stone in place with at least two passes of suitable vibratory compaction equipment.

The Contractor should compact floor slab subgrades to repair any disturbance that may occur due to construction operations before placing capillary moisture barrier materials. Since floors will be slab-on-grade, foundation and utility excavations should be backfilled with compacted structural fill as defined in the Site Grading and Earthwork section of this report.

To limit the potential for damage due to moisture-related volume change of foundation soils, we recommend turn-downs be founded at least 3 ft below final exterior grades. This depth is adequate for frost protection. Crushed stone should not be placed below turn-downs.

©2017 All Rights Reserved

To further limit the potential for damage from moisture-related volume change of foundation soils, site grades should be set to permit positive drainage of surface water away from the tank. Trees should not be planted within 25 ft of the foundation.

Earth Pressures

We understand the wet well walls will be designed to retain soil and will be braced by the structure preventing movement. We anticipate relief of hydrostatic pressure from behind the walls is not incorporated into the design. Hydrostatic pressures due to groundwater should be considered in addition to the earth pressures.

Braced walls should be designed considering equivalent fluid pressures, g_{ef}. Equivalent fluid pressures are presented in Table 1 for the respective wall type, soil conditions relative to groundwater, and backfill conditions. Where applicable, the design should consider surcharge loads using a rectangular earth pressure distribution. The surcharge pressure ordinate should be obtained by multiplying the surface surcharge pressure, q, by the factor in Table 1 for the backfill condition.

Table 1: Recommended Design Parameters for Walls

Backfill Materials	Soil Conditions	Equivalent Fluid Pressure (gef)	Surcharge Pressure Factor
On-site	Moist	60H	0.5
On-site	Saturated	90H	0.5
Free-draining	Moist	40H	0.35
Free-draining	Saturated	80H	0.35

The above parameters consider a horizontal ground surface behind the walls. We should be contacted to provide alternative parameters if sloping ground surface conditions are anticipated. The equivalent fluid pressure for the saturated soil conditions includes hydrostatic pressure due to groundwater.

Backfill materials for walls designed considering free-draining backfill should consist of non-plastic material classifying SP-SM, SW-SM, SP, SW, GW-GM, GP-GM, GP, or GW according to ASTM D2487. This classification includes open-graded crushed stone such as VDOT No. 78 or No. 57. Free-draining backfill should be placed in the zone extending from the base of the wall upwards at 45 degrees. Backfill materials for walls designed considering on-site materials used for backfill should consist of material classifying ML, SC, SM, SP, SW, GP, or GW according to ASTM D2487.

The Contractor should place backfill in maximum 8-inch thick loose lifts, and compact each lift to at least 95 percent of maximum dry density according to ASTM D698 (Standard Proctor), or to at least 70 percent relative density according to ASTM D4253 and D4254. Only light hand-operated equipment should be used to compact backfill against walls. The Structural Engineer of Record should approve the size of the compaction equipment. If backfill consists of open-graded aggregate, the Contractor should place backfill in maximum 12-inch thick lifts, and compact each lift using suitable vibratory equipment.

©2017 All Rights Reserved

Pavements

The Contractor should prepare pavement subgrades and place compacted structural fill for pavement support as described in the Site Grading and Earthwork section of this report. Dense-graded aggregate placed as pavement base course should be compacted to at least 95 percent of maximum dry density according to ASTM D698, Standard Proctor. Dense-graded aggregate should be placed in maximum 8-inch thick loose lifts.

Final pavement subgrades should be proofrolled under the observation of the Geotechnical Engineer immediately prior to placing subbase or base course aggregate to evaluate their suitability to support the pavement.

Laboratory testing on a soil sample from Boring B-90 indicated that pavement subgrade soils could have a CBR of 1.1 and a swell value of 6.0%. Undercut at the pavement subgrade elevation may be required. Unsuitable soils observed during a proofroll should be undercut and backfilled with additional VDOT Size No. 21B aggregate base material.

We developed the recommended pavement sections according to the AASHTO 1993 design method for flexible pavements based on a design CBR value of 0.8. This design CBR value represents two-thirds of the laboratory value. The Type I Section should be used only in areas where truck traffic is not anticipated, while the Type II Section considers light truck traffic.

Our analysis considers that proper grading will be maintained to provide runoff from the pavement surface and beyond the limits of paved areas. We recommend the following pavement sections:

Table 1: Pavement Sections

Type Section	Thickness (inches)
Gravel Pavement Section – Type I Section	
Dense-Graded Aggregate Base Course, VDOT 21B	12
Asphalt Pavement Section – Type II Section	
Asphalt Concrete Surface Course, VDOT SM-9.5A	1.5
Asphalt Concrete Intermediate Course, VDOT IM-19.0A	2
Dense-Graded Aggregate Subbase Course, VDOT 21B	12

We recommend that reinforced concrete pavement be used in approach pad areas. These pads should be designed based on a modulus of subgrade reaction value, k, of 100 pci. The recommended modulus value is for a 1-ft-square plate. Some pavement design software may consider different definitions of k for input. The Civil Engineer should contact our office if their software considers a different definition of k.

Adequate control of surface drainage will be a very important consideration for the overall performance of this pavement design. The area surrounding pavements should be graded to direct surface water away

©2017 All Rights Reserved

from paved areas. Utility excavations within pavement areas should be backfilled with compacted structural fill.

CONSTRUCTION CONSIDERATIONS

Site Grading and Earthwork

The test boring data indicate the approximate depth of topsoil based on our visual identification procedures. The depth of stripping needed to provide a suitable base for placement of earthwork or pavements may include topsoil and other softer surficial layers. Stripping depths in previously cultivated areas will be greater, particularly during periods of wet weather. The depth of required stripping should be determined by the excavation Contractor prior to construction using test pits, probes, or other means.

The on-site soils are susceptible to moisture changes, will be easily disturbed, and will be difficult to compact under wet weather conditions. Drying and reworking of the soils are likely to be difficult during periods of wet months. We recommend that the earthwork phases of this project be performed during the warmer, drier times of the year to limit the potential for disturbance of on-site soils.

The soils at this site consist primarily of moderately to highly plastic silts. These soils are moisture sensitive, and will become readily disturbed by construction traffic on exposed surfaces of wet subgrades. We recommend avoiding wet weather site preparation and grading activities. If wet weather work is performed, the quantities of disturbed soils to be excavated can be expected to increase.

Traffic on stripped or undercut subgrades should be limited to reduce disturbance of underlying soils. Also, using lightweight, track-mounted dozer equipment for stripping will limit the disturbance of underlying soils, and may reduce the undercut volume needed. The Contractor should provide site drainage to maintain subgrades free of water and to avoid saturation and disturbance of the subgrade soils before placing compacted structural fill, pavement base course or moisture barrier material. This site drainage will be important during all phases of the construction work. The Contractor should be responsible for reworking of subgrades and compacted structural fill that were initially considered suitable but were later disturbed by equipment and/or weather.

Foundations

The Contractor should exercise care during excavation for foundations so that as little disturbance as possible occurs at the foundation level. The Contractor should carefully clean loose or soft soils from the bottom of the excavation before placing concrete. A Geotechnical Engineer from our firm should observe foundation subgrades prior to concrete placement to evaluate whether subgrade soils are as anticipated in this report.

Foundation subgrades needing undercut should be concreted at the elevation of undercut or backfilled to the original design subgrade elevation with dense graded aggregate, controlled low strength material (CLSM), or lean concrete. We do not recommend open-graded crushed stone backfill since this material provides a path for moisture to reach subgrade soils, resulting in an increased potential for shrink/swell related distress. The Contractor should place foundation concrete immediately after excavation of the foundation to prevent accumulation of water in the excavation or drying of foundation soils.

©2017 All Rights Reserved

The potential for variation of moisture content in foundation soils is probably greatest during construction. If the moisture content of foundation soils increases or decreases during construction, a moisture-related change in volume will likely occur as these soils return to their natural moisture content. Therefore, prompt placement of concrete, backfilling, and grading are very important for proper foundation performance.

The Contractor should anticipate groundwater during excavation for the wet well at this site, and possibly utility excavations. We anticipate that pumping from sump pits within the excavation can control groundwater. To protect bearing materials from deteriorating, three-inch mud-mats consisting of lean concrete should be placed over them immediately after excavation and evaluation of foundation subgrades. Forms may be used if necessary, but less subgrade disturbance is expected if excavations are made to the required dimensions, and concrete is placed against the soil. If foundations are formed, the forms should be pulled and the excavation backfilled as soon as possible. Water should not be allowed to pond along the outside of footings for long periods of time.

Engineering Services During Construction

The engineering recommendations provided in this report are based on the information obtained from the subsurface exploration and laboratory testing. However, conditions on the site may vary between the discrete locations observed at the time of our subsurface exploration. The nature and extent of variations between borings may not become evident until during construction.

To account for this variability, we should provide professional observation and testing of subsurface conditions revealed during construction as an extension of our engineering services. These services will also help in evaluating the contractor's conformance with the plans and specifications in accordance with building code requirements. Because of our unique position to understand the intent of the geotechnical engineering recommendations, retaining Schnabel for these services will allow the owner to receive consistent service throughout the project construction.

General Specification Recommendations

An allowance should be established to account for possible additional costs that may be required to construct earthwork and foundations as recommended in this report. Additional costs may be incurred for a variety of reasons including variation of soil between borings, greater than anticipated unsuitable soils, need for borrow fill material, wet on-site soils, obstructions, etc.

The project specifications should indicate the Contractor's responsibility for providing adequate site drainage during construction. Inadequate drainage will most likely lead to disturbance of soils by construction traffic and increased volume of undercut.

This report may be made available to prospective bidders for informational purposes. We recommend that the project specifications contain the following statement:

> *Schnabel Engineering, LLC, has prepared this geotechnical engineering report for this project. This report is for informational purposes only and is not part of the contract documents. The opinions expressed represent the Geotechnical Engineer's interpretation of the subsurface*

©2017 All Rights Reserved

conditions, tests, and the results of analyses performed. Should the data contained in this report not be adequate for the Contractor's purposes, the Contractor may make, before bidding, independent exploration, tests and analyses. This report may be examined by bidders at the office of the Owner, or copies may be obtained from the Owner at nominal charge.

Additional data and reports prepared by others that could have an impact upon the Contractor's bid should also be made available to prospective bidders for informational purposes.

LIMITATIONS

We based the analyses and recommendations submitted in this report on the information revealed by our exploration. We attempted to provide for normal contingencies, but the possibility remains that unexpected conditions may be encountered during construction.

This report has been prepared to aid in the evaluation of this site and to assist in the design of the project. It is intended for use concerning this specific project. We based our recommendations on information on the site and proposed construction as described in this report. Substantial changes in loads, locations, or grades should be brought to our attention so we can modify our recommendations as needed. We would appreciate an opportunity to review the plans and specifications as they pertain to the recommendations contained in this report, and to submit our comments to you based on this review.

We have endeavored to complete the services identified herein in a manner consistent with that level of care and skill ordinarily exercised by members of the profession currently practicing in the same locality and under similar conditions as this project. No other representation, express or implied, is included or intended, and no warranty or guarantee is included or intended in this report, or other instrument of service.

We appreciate the opportunity to be of service for this project. Please call us if you have any questions regarding this report.

Sincerely,

SCHNABEL ENGINEERING, LLC

Noland M. Silman, PE
Project Engineer

COMMONWEALTH OF VIRGINIA
NOLAND SILMAN
Lic. No. 050054
PROFESSIONAL ENGINEER

Jeremy L. Mydlinski, PE
Senior Associate

COMMONWEALTH OF VIRGINIA
JEREMY L. MYDLINSKI
Lic. No. 033936
PROFESSIONAL ENGINEER

NMS:JLM:dah

©2017 All Rights Reserved

Figures
Appendix A: Subsurface Exploration Data
Appendix B: Soil Laboratory Test Data

©2017 All Rights Reserved

FIGURES

Figure 1: Site Vicinity Map
Figure 2: Boring Location Plan

©2017 All Rights Reserved

Sources: Esri, HERE, DeLorme, USGS, Intermap, INCREMENT P, NRCan, Esri Japan, METI, Esri China (Hong Kong), Esri Korea, Esri (Thailand), MapmyIndia, NGCC, © OpenStreetMap contributors, and the GIS User Community
Esri, HERE, DeLorme, MapmyIndia, © OpenStreetMap contributors

NOT TO SCALE

Schnabel ENGINEERING

ZION CROSSROADS WATER AND SEWER SYSTEM
ROUTE 250 AND ROUTE 15
FLUVANNA COUNTY, VIRGINIA

PROJECT NO. 16C13175 Task 03

SITE VICINITY MAP

FIGURE 1

© Schnabel Engineering, 2017. All Rights Reserved.

arcgis
3/21/2017 This Map was Created In Schnabel Engineerings Site Vicinity Map Application

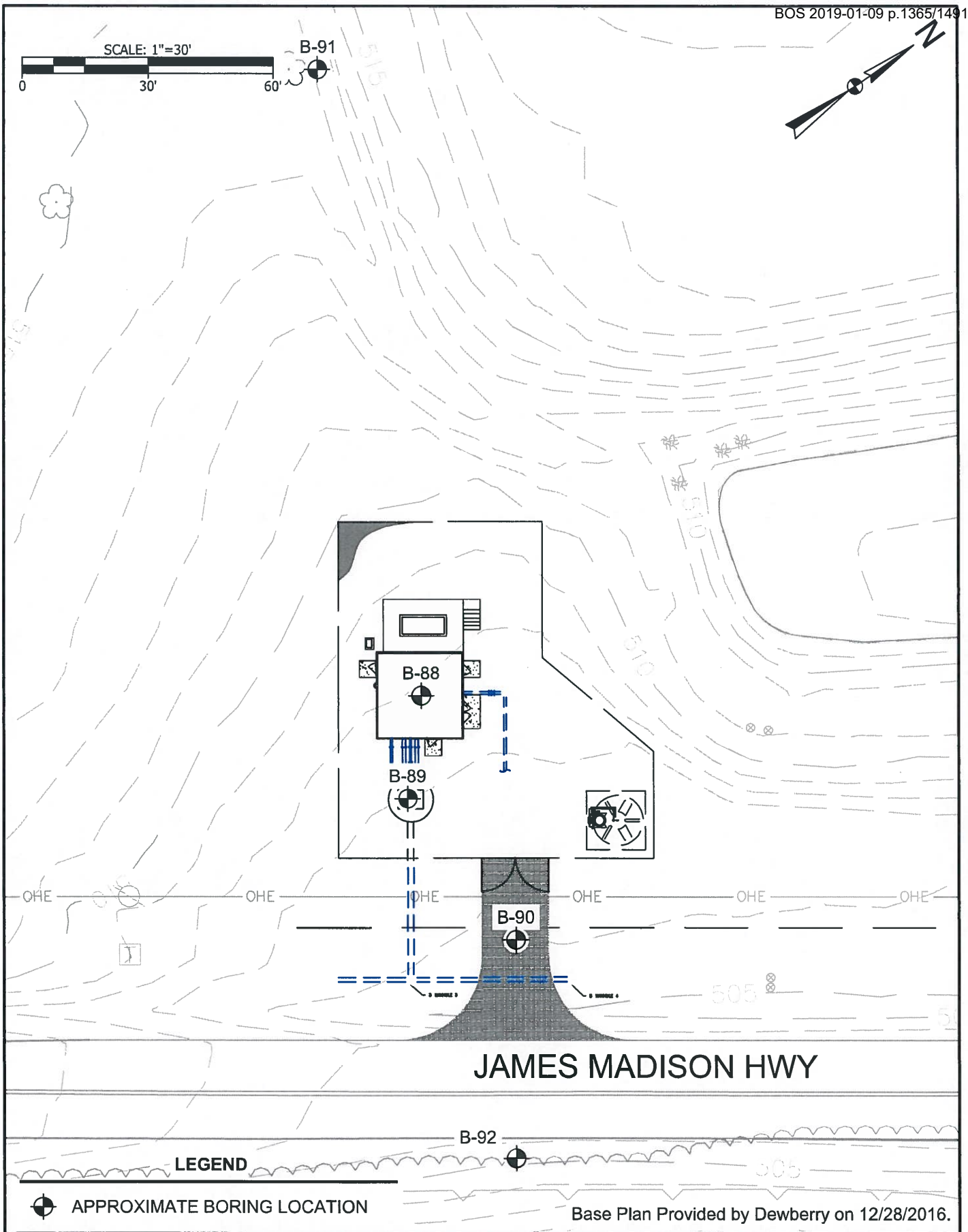

Schnabel ENGINEERING	ZION CROSSROADS WATER AND SEWER SYSTEM ROUTE 250 AND ROUTE 15 FLUVANNA COUNTY, VIRGINIA	Figure Name: BORING LOCATION PLAN	Done: D. KNIECH	Figure Number: 2
		Project Number: 16C13175, TASK 03	Reviewed: K. POCTA	Date: MAR 2017

G:\2011 - 2020\2016\Richmond\16C13175 Zion Crossroads Water and Sewer\03-SE Products\08-CAD\Boring Location Plan.dwg, 3/22/2017 2:29:57 PM

APPENDIX A

SUBSURFACE EXPLORATION DATA

Subsurface Exploration Procedures
General Notes for Subsurface Exploration Logs
Identification of Soil
Boring Logs, B-88 through B-90

©2017 All Rights Reserved

SUBSURFACE EXPLORATION PROCEDURES

Test Borings – Hollow Stem Augers

The borings are advanced by turning a continuous flight auger with a center opening of 2¼ inches. A plug device blocks off the center opening while augers are advanced. Cuttings are brought to the surface by the auger flights. Sampling is performed through the center opening in the hollow stem auger, by standard methods, after removal of the plug. Usually, no water is introduced into the boring.

Standard Penetration Test Results

The numbers in the Sampling Data column of the boring logs represent Standard Penetration Test (SPT) results. Each number represents the blows needed to drive a 2-inch O.D., 1⅜-inch I.D. split-spoon sampler 6 inches, using a 140-pound hammer falling 30 inches. The sampler is typically driven a total of 18 inches. The first 6 inches are considered a seating interval. The total of the number of blows for the second and third 6-inch intervals is the SPT "N value." The SPT is performed according to ASTM D1586.

Soil Classification Criteria

The group symbols on the logs represent the Unified Soil Classification System Group Symbols (ASTM D2487) based on visual observation and limited laboratory testing of the samples. Criteria for visual identification of soil samples are included in this appendix. Some variation can be expected between samples visually classified and samples classified in the laboratory.

Water Observation Well

A temporary water observation well was installed in Boring B-89 by inserting a hand-slotted, 1¼-inch PVC pipe in the boring. The pipe was capped and the area surrounding the pipe was backfilled with cuttings from the boring.

Boring Locations and Elevations

Boring locations were located using sub-meter GPS equipment. Approximate boring locations are shown on Figure 2. Ground surface elevations at the boring locations were obtained from the site topographic plans and are indicated on the boring logs. Locations and elevations should be considered no more accurate than the methods used to determine them.

©2017 All Rights Reserved

GENERAL NOTES FOR SUBSURFACE EXPLORATION LOGS

1. Numbers in sampling data column next to Standard Penetration Test (SPT) symbols indicate blows required to drive a 2-inch O.D., 1⅜-inch I.D. sampling spoon 6 inches using a 140 pound hammer falling 30 inches. The Standard Penetration Test (SPT) N value is the number of blows required to drive the sampler 12 inches, after a 6 inch seating interval. The Standard Penetration Test is performed in general accordance with ASTM D1586.
2. Visual classification of soil is in accordance with terminology set forth in "Identification of Soil." The ASTM D2487 group symbols (e.g., CL) shown in the classification column are based on visual observations.
3. Estimated water levels indicated on the logs are only estimates from available data and may vary with precipitation, porosity of the soil, site topography, and other factors.
4. Refusal at the surface of rock, boulder, or other obstruction is defined as an SPT resistance of 50 blows for 1 inch or less of penetration.
5. The logs and related information depict subsurface conditions only at the specific locations and at the particular time when drilled or excavated. Soil conditions at other locations may differ from conditions occurring at these locations. Also, the passage of time may result in a change in the subsurface soil and water level conditions at the subsurface exploration location.
6. The stratification lines represent the approximate boundary between soil and rock types as obtained from the subsurface exploration. Some variation may also be expected vertically between samples taken. The soil profile, water level observations and penetration resistances presented on these logs have been made with reasonable care and accuracy and must be considered only an approximate representation of subsurface conditions to be encountered at the particular location.
7. Key to symbols and abbreviations:

☒	S-1, SPT	Sample No., Standard Penetration Test
	5+10+1	Number of blows in each 6-inch increment

LL	Liquid Limit
MC	Moisture Content (percent)
PL	Plastic Limit
%Passing#200	Percent by weight passing a No. 200 Sieve

©2017 All Rights Reserved

IDENTIFICATION OF SOIL

I. DEFINITION OF SOIL GROUP NAMES (ASTM D2487)

			SYMBOL	GROUP NAME
Coarse-Grained Soils More than 50% retained on No. 200 sieve	Gravels – More than 50% of coarse fraction retained on No. 4 sieve Coarse, ¾" to 3" Fine, No. 4 to ¾"	Clean Gravels Less than 5% fines	GW	WELL GRADED GRAVEL
			GP	POORLY GRADED GRAVEL
		Gravels with fines More than 12% fines	GM	SILTY GRAVEL
			GC	CLAYEY GRAVEL
	Sands – 50% or more of coarse Fraction passes No. 4 sieve Coarse, No. 10 to No. 4 Medium, No. 40 to No. 10 Fine, No. 200 to No. 40	Clean Sands Less than 5% fines	SW	WELL GRADED SAND
			SP	POORLY GRADED SAND
		Sands with fines More than 12% fines	SM	SILTY SAND
			SC	CLAYEY SAND
Fine-Grained Soils 50% or more passes the No. 200 sieve	Silts and Clays – Liquid Limit less than 50 Low to medium plasticity	Inorganic	CL	LEAN CLAY
			ML	SILT
		Organic	OL	ORGANIC CLAY
				ORGANIC SILT
	Silts and Clays – Liquid Limit 50 or more Medium to high plasticity	Inorganic	CH	FAT CLAY
			MH	ELASTIC SILT
		Organic	OH	ORGANIC CLAY
				ORGANIC SILT
Highly Organic Soils	Primarily organic matter, dark in color and organic odor		PT	PEAT

II. DEFINITION OF SOIL COMPONENT PROPORTIONS (ASTM D2487)

			Examples
Adjective Form	GRAVELLY SANDY	>30% to <50% coarse grained component in a fine-grained soil	GRAVELLY LEAN CLAY
	CLAYEY SILTY	>12% to <50% fine grained component in a coarse-grained soil	SILTY SAND
"With"	WITH GRAVEL WITH SAND	>15% to <30% coarse grained component in a fine-grained soil	FAT CLAY WITH GRAVEL
	WITH GRAVEL WITH SAND	>15% to <50% coarse grained component in a coarse-grained soil	POORLY GRADED GRAVEL WITH SAND
	WITH SILT WITH CLAY	>5% to <12% fine grained component in a coarse-grained soil	POORLY GRADED SAND WITH SILT

III. GLOSSARY OF MISCELLANEOUS TERMS

SYMBOLS ..... Unified Soil Classification Symbols are shown above as group symbols. A dual symbol "-" indicates the soil belongs to two groups. A borderline symbol "/" indicates the soil belongs to two possible groups.

FILL ..... Man-made deposit containing soil, rock and often foreign matter.

PROBABLE FILL ..... Soils which contain no visually detected foreign matter but which are suspect with regard to origin.

DISINTEGRATED ROCK (DR) ..... Residual materials with a standard penetration resistance (SPT) between 60 blows per foot and refusal. Refusal is defined as an SPT of 50 blows for 1" or less penetration.

BOULDERS & COBBLES ..... Boulders are considered rounded pieces of rock larger than 12 inches, while cobbles range from 3 to 12-inch size.

LENSES ..... 0 to ½-inch seam within a material in a test pit.

LAYERS ..... ½ to 12-inch seam within a material in a test pit.

POCKET ..... Discontinuous body within a material in a test pit.

MOISTURE CONDITIONS ..... Wet, moist or dry to indicate visual appearance of specimen.

COLOR ..... Overall color, with modifiers such as light to dark or variation in coloration.

©2017 All Rights Reserved

Schnabel ENGINEERING — **TEST BORING LOG**

Project: Zion Crossroads Water and Sewer System
Route 250 and Route 15
Fluvanna County, Virginia

Boring Number: **B-88**
Contract Number: 16C13175 Task 03
Sheet: 1 of 1

Contractor: Ayers & Ayers, Inc.
Powhatan, Virginia
Contractor Foreman: J. Ayers Jr.
Schnabel Representative: E. Bradshaw
Equipment: CME-45B (Trailer)
Method: 2-1/4" I.D. Hollow Stem Auger

Hammer Type: Safety Hammer (140 lb)
Dates Started: 3/6/17 **Finished:** 3/6/17
Location: See Location Plan

Ground Surface Elevation: 508± (ft) **Total Depth:** 15.0 ft

Groundwater Observations

	Date	Time	Depth	Casing	Caved
Encountered ▽	3/6	8:56 AM	14.8'	---	---
Completion ▼	3/6	8:56 AM	14.8'	---	---
Casing Pulled	3/6	---	Dry	---	5.0'

DEPTH (ft)	MATERIAL DESCRIPTION	SYMBOL	ELEV (ft)	STRATUM	SAMPLING DEPTH	SAMPLING DATA	TESTS	REMARKS
0.3	Rootmat and topsoil; 4 inches		507.7					RESIDUUM
	SILTY SAND, fine to medium grained sand; moist, brown, contains root fragments	SM		C2		S-01, SPT 2+5+4 REC=7", 39%		
2.0			506.0					
	SANDY ELASTIC SILT; moist, orangish brown, contains root fragments, and rock fragments	MH				S-02, SPT 5+5+8 REC=11", 61%	LL = 82 PL = 37 MC = 26.3% % Passing #200 = 67.6	
4.0			504.0					
	SANDY SILT; moist, light gray				5	S-03, SPT 5+6+9 REC=13", 72%		
	Change: orangish brown							
						S-04, SPT 5+4+8 REC=11", 61%	MC = 25.0%	
				C1				
		ML			10	S-05, SPT 6+11+12 REC=13", 72%		
						S-06, SPT 5+8+8 REC=15", 83%		
15.0			493.0		15			

Bottom of Boring at 15.0 ft.
Boring terminated at selected depth.
Boring backfilled with cuttings upon completion.

TEST BORING LOG 16C13175 TASK 03 - WASTEWATER PUMP STATION.GPJ SCHNABEL DATA TEMPLATE 2008_07_06.GDT 3/23/17

Schnabel ENGINEERING **TEST BORING LOG**

Project: Zion Crossroads Water and Sewer System
Route 250 and Route 15
Fluvanna County, Virginia

Boring Number: **B-89**
Contract Number: 16C13175 Task 03
Sheet: 1 of 1

Contractor: Ayers & Ayers, Inc.
Powhatan, Virginia
Contractor Foreman: J. Ayers Jr.
Schnabel Representative: E. Bradshaw
Equipment: CME-45B (Trailer)
Method: 2-1/4" I.D. Hollow Stem Auger
Hammer Type: Safety Hammer (140 lb)
Dates Started: 3/6/17 **Finished:** 3/6/17
Location: See Location Plan
Ground Surface Elevation: 507± (ft) **Total Depth:** 25.0 ft

Groundwater Observations

	Date	Time	Depth	Casing	Caved
Encountered	3/6	10:22 AM	19.0'	---	---
Completion	3/6	10:22 AM	10.0'	---	---
Observation Well	3/6	10:22 AM	8.0'	26.5'	---
Observation Well	3/6	2:18 PM	4.8'	26.5'	---
Observation Well	3/20	3:30 PM	3.9'	26.5'	---

DEPTH (ft)	MATERIAL DESCRIPTION	SYMBOL	ELEV (ft)	STRATUM	SAMPLING DEPTH	SAMPLING DATA	TESTS	REMARKS
0.3	Rootmat and topsoil; 4 inches		506.7					RESIDUUM
	SILTY SAND, fine to medium grained sand; moist, brown, contains root fragments	SM		C2		S-01, SPT 2+4+3 REC=12", 67%		
2.0	ELASTIC SILT WITH SAND; moist, orangish brown, contains root fragments	MH	505.0			S-02, SPT 4+4+5 REC=12", 67%	MC = 25.9%	
					5	S-03, SPT 3+3+5 REC=12", 67%	LL = 60 PL = 34 MC = 33.6% % Passing #200 = 78.4	
7.0	SILT WITH SAND; moist, orangish brown, contains mica	ML	500.0			S-04, SPT 8+14+13 REC=12", 67%		
				C1	10	S-05, SPT 10+9+9 REC=10", 56%		
	Change: orangish brown and dark brown				15	S-06, SPT 4+6+8 REC=16.5", 92%	LL = 49 PL = 44 MC = 38.0% % Passing #200 = 70.2	
18.0	SILTY SAND, fine to medium grained sand; moist, orangish brown, contains mica	SM	489.0	C2	20	S-07, SPT 5+10+13 REC=15", 83%	MC = 27.7%	
						S-08, SPT 7+12+15 REC=10", 56%	MC = 24.7%	
25.0			482.0		25			

Bottom of Boring at 25.0 ft.
Boring terminated at selected depth.
Observation well installed upon completion.

Schnabel ENGINEERING **TEST BORING LOG**

Project: Zion Crossroads Water and Sewer System
Route 250 and Route 15
Fluvanna County, Virginia

Boring Number: **B-90**
Contract Number: 16C13175 Task 03
Sheet: 1 of 1

Contractor: Ayers & Ayers, Inc.
Powhatan, Virginia
Contractor Foreman: J. Ayers Jr.
Schnabel Representative: E. Bradshaw
Equipment: CME-45B (Trailer)
Method: 2-1/4" I.D. Hollow Stem Auger

Hammer Type: Safety Hammer (140 lb)
Dates Started: 3/6/17 **Finished:** 3/6/17
Location: See Location Plan

Ground Surface Elevation: 506± (ft) **Total Depth:** 15.0 ft

Groundwater Observations

	Date	Time	Depth	Casing	Caved
Encountered ▽	3/6	9:23 AM	14.5'	---	---
Completion	3/6	---	Dry	---	---
Casing Pulled	3/6	---	Dry	---	4.0'

DEPTH (ft)	MATERIAL DESCRIPTION	SYMBOL	ELEV (ft)	STRATUM	SAMPLING DEPTH	SAMPLING DATA	TESTS	REMARKS
0.3	Rootmat and topsoil; 3 inches		505.8					
	FILL, sampled as silty sand, fine to medium grained sand; moist, grayish brown, contains root fragments, and glass fragments	FILL		A		S-01, SPT 2+2+2 REC=13", 72%		FILL
2.0	SILT WITH SAND; moist, yellowish brown, contains root fragments, and rock fragments	ML	504.0	C1		S-02, SPT 1+1+2 REC=10", 56%		RESIDUUM
					5	S-03, SPT 2+4+5 REC=9", 50%	LL = 42 PL = 31 MC = 30.4% % Passing #200 = 70.4	
7.0	SILTY SAND, fine to medium grained sand; moist, gray and orangish brown	SM	499.0	C2		S-04, SPT 1+2+3 REC=13", 72%		
	Change: orangish brown and dark brown				10	S-05, SPT 4+8+8 REC=14", 78%		
	Change: contains mica ▽					S-06, SPT 3+5+7 REC=13", 72%		
15.0			491.0		15			

Bottom of Boring at 15.0 ft.
Boring terminated at selected depth.
Boring backfilled with cuttings upon completion.

TEST BORING LOG 16C13175 TASK 03 - WASTEWATER PUMP STATION.GPJ SCHNABEL DATA TEMPLATE 2008_07_06.GDT 3/23/17

APPENDIX B

SOIL LABORATORY TEST DATA

Summary of Laboratory Tests
Gradation Curves
Atterberg Limits
Moisture Density Relationship

©2017 All Rights Reserved

Summary Of Laboratory Tests

Project Number: 16C13175 Task 03

Boring No.	Sample Depth ft / Elevation ft	Sample Type	Description of Soil Specimen	Testing Laboratory	Stratum	Natural Moisture (%)	Liquid Limit	Plastic Limit	Plasticity Index	% Passing No. 200 Sieve	% Passing No. 40 Sieve	% Retained No. 4 Sieve	Maximum Dry Density (pcf)	Optimum Moisture Content (%)	CBR Dry Density At Compaction (pcf)	CBR Moisture Content (%)	CBR Percent Swell	CBR Value
B-88	2.0 - 3.5 / 506.0 - 504.5	Jar	SANDY ELASTIC SILT (MH), contains rock fragments, light orangish brown	RICH	C1	26.3	82	37	45	67.6	86.7	3.1	--	--	--	--	--	--
B-89	4.0 - 5.5 / 503.0 - 501.5	Jar	ELASTIC SILT WITH SAND (MH), light gray and brown	RICH	C1	33.6	60	34	26	78.4	91.9	0.0	--	--	--	--	--	--
B-89	14.0 - 15.5 / 493.0 - 491.5	Jar	SILT WITH SAND (ML), brown	RICH	C1	38.0	49	44	5	70.2	87.4	0.0	--	--	--	--	--	--
B-90	4.0 - 9.0 / 502.0 - 497.0	Bulk	SILT WITH SAND (ML, A-5), contains mica, light brown	RICH	C1	30.4	42	31	11	70.4	89.1	1.4	106.5	16.4	107.6	15.9	6.0	1.1

Notes:
1. Soil tests in general accordance with ASTM standards.
2. Soil classifications are in general accordance with ASTM D2487(as applicable), based on testing indicated and visual classification.
3. Key to abbreviations: NP=Non-Plastic; -- indicates no test performed

Schnabel ENGINEERING

Project: Zion Crossroads Water and Sewer System
Route 250 and Route 15
Fluvanna County, VA

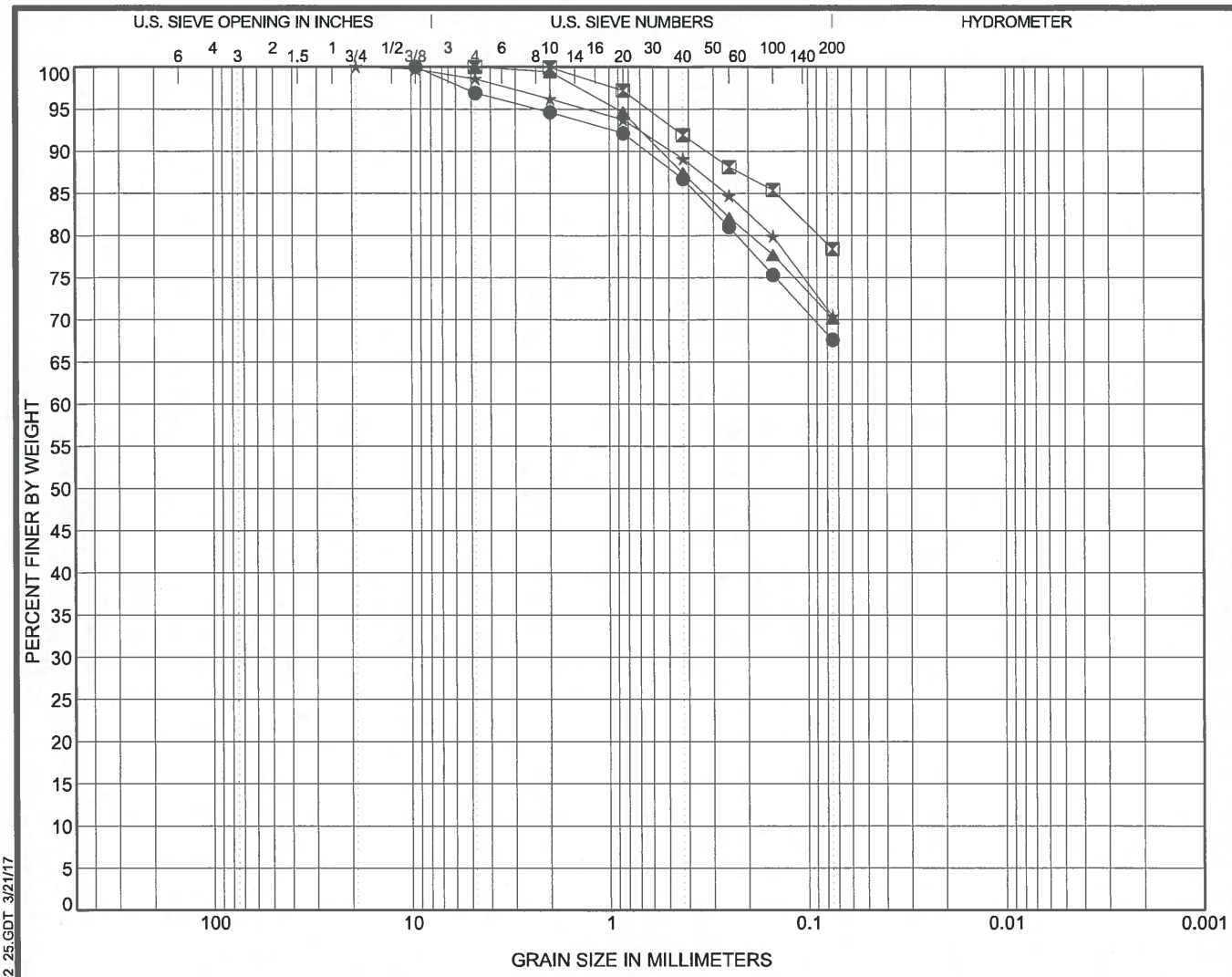

COBBLES	GRAVEL		SAND			SILT OR CLAY
	coarse	fine	coarse	medium	fine	

	Specimen		Sample Description	LL	PL	PI		
●	B-88	2.0 ft	SANDY ELASTIC SILT (MH), contains rock fragments, light orangish brown	82	37	45		
⊠	B-89	4.0 ft	ELASTIC SILT WITH SAND (MH), light gray and brown	60	34	26		
▲	B-89	14.0 ft	SILT WITH SAND (ML), brown	49	44	5		
★	B-90	4.0 ft	SILT WITH SAND (ML, A-5), contains mica, light brown	42	31	11		

	Specimen		Test Method	Testing Lab	D100	D60	D30	D10	%Gravel	%Sand	%Silt	%Clay
●	B-88	2.0 ft	ASTM D422	RICH	9.5	--	--	--	3.1	29.3	67.6	
⊠	B-89	4.0 ft	ASTM D422	RICH	4.75	--	--	--	0.0	21.6	78.4	
▲	B-89	14.0 ft	ASTM D422	RICH	4.75	--	--	--	0.0	29.8	70.2	
★	B-90	4.0 ft	ASTM D422	RICH	19	--	--	--	1.4	28.2	70.4	

Schnabel ENGINEERING

GRADATION CURVES

Project: Zion Crossroads Water and Sewer System
Route 250 and Route 15
Fluvanna County, VA

Contract: 16C13175 Task 03

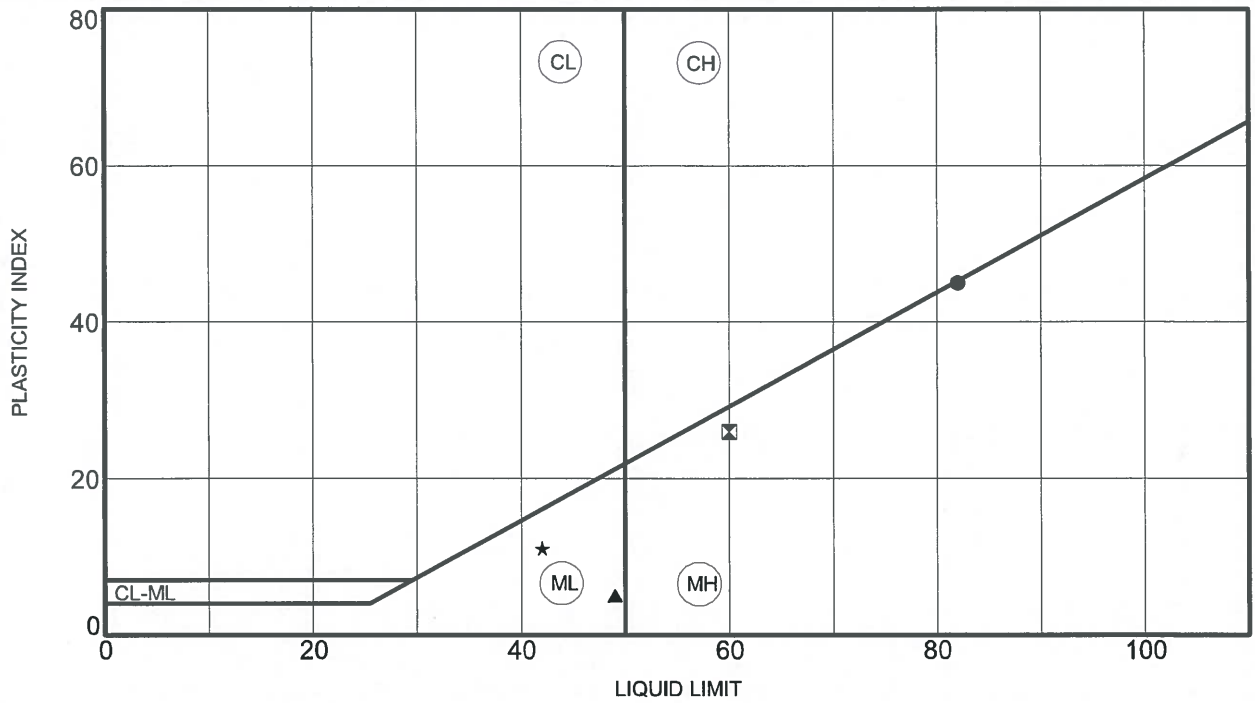

PLOTTED DATA REPRESENTS SOIL PASSING NO. 40 SIEVE

	Specimen		LL	PL	PI	Fines	Testing Lab	Description
●	B-88	2.0 ft	82	37	45	68	RICH	SANDY ELASTIC SILT (MH), contains rock fragments, light orangish brown
⊠	B-89	4.0 ft	60	34	26	78	RICH	ELASTIC SILT WITH SAND (MH), light gray and brown
▲	B-89	14.0 ft	49	44	5	70	RICH	SILT WITH SAND (ML), brown
★	B-90	4.0 ft	42	31	11	70	RICH	SILT WITH SAND (ML, A-5), contains mica, light brown

Schnabel ENGINEERING

ATTERBERG LIMITS

Project: Zion Crossroads Water and Sewer System
Route 250 and Route 15
Fluvanna County, VA

Contract: 16C13175 Task 03

ATTERBERG LIMITS 16C13175 TASK 03 - WASTEWATER PUMP STATION.GPJ SCHNABEL DATA TEMPLATE 2008 04 22.GDT 3/21/17

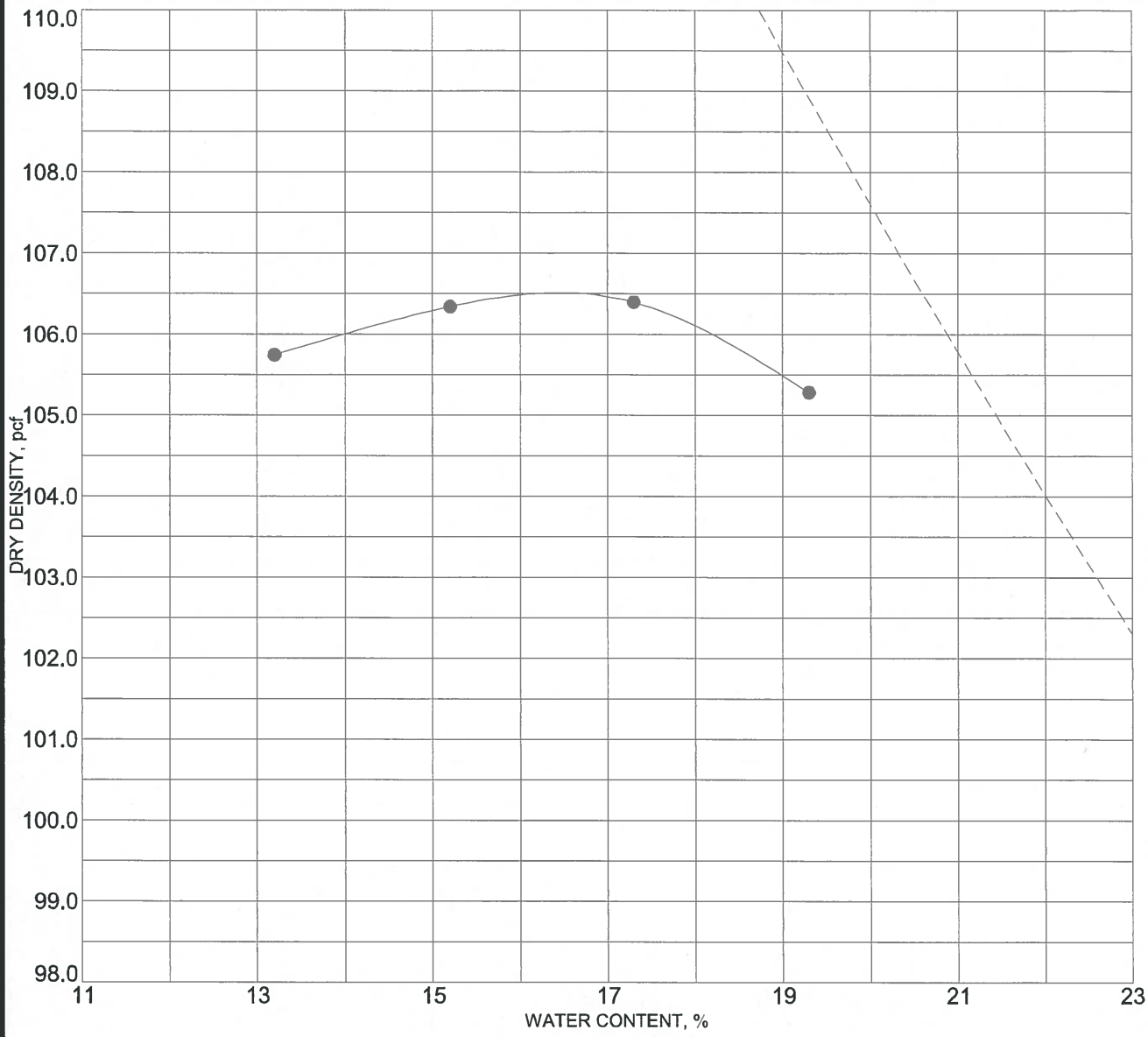

Sample Description:	SILT WITH SAND (ML, A-5), contains mica, light brown	Assumed Specific Gravity:	2.63
		Max. Dry Density (pcf):	106.5
		Opt. Moisture (%):	16.4
Sample Source:	B-90, 4.0 ft		
Test Methods:	VTM1		

Liquid Limit (LL):	42
Plasticity Index (PI):	11
% Retained #4 Sieve:	1.4
% Passing # 200 Sieve:	70.4

Comments:
Borrow Source: Bulk sample obtained from auger cuttings over the depth interval 4.0 to 9.0 feet
Date: 3-21-17 Reviewed By: DS

Schnabel ENGINEERING

MOISTURE DENSITY RELATIONSHIP

Project: Zion Crossroads Water and Sewer System
Route 250 and Route 15
Fluvanna County, VA

Contract: 16C13175 Task 3 **Testing Lab:** RICH

COMPACTION 16C13175 TASK 03 - WASTEWATER PUMP STATION.GPJ SCHNABEL DATA TEMPLATE 2008 04 22.GDT 3/21/17

GEOTECHNICAL ENGINEERING REPORT

Zion Crossroads Water and Sewer System
Water Booster Station
Route 250 and Route 15
Fluvanna County, Virginia

Schnabel Reference: 16C13175 Task 02
March 3, 2017

Prepared For:
Dewberry Engineers, Inc.

Dewberry

Schnabel ENGINEERING

Schnabel
ENGINEERING

March 3, 2017

Ms. Melanie Leckey, P.E.
Dewberry Engineers, Inc.
4805 Lake Brook Drive, Suite 200
Glen Allen, VA 23060

Subject: **Geotechnical Engineering Report, Zion Crossroads Water and Sewer System, Water Booster Station, Route 250 and Route 15, Fluvanna County, Virginia (Schnabel Reference 16C13175 Task 02)**

Dear Ms. Leckey:

SCHNABEL ENGINEERING, LLC (Schnabel) is pleased to submit our geotechnical engineering report for the water booster station included in this project. This study was performed in accordance with our revised proposal dated September 28, 2015, as authorized by your office on December 14, 2016.

SITE AND PROJECT DESCRIPTION

The Zion Crossroads Water and Sewer System includes a series of water and sewer infrastructure additions and upgrades. These upgrades include approximately 23,000 lf of 10" diameter sewer force main, approximately 18,000 lf of 12" diameter waterline, a new water booster station, a new sewage pump station, and a new elevated water storage tank.

The proposed location of the water booster station is about 3 miles west of the intersection of Route 250 and Route 15. The booster station will be south of Route 250, just east of Prison Lane and northeast of the Fluvanna Women's Correctional Center. The area consists of an open field with existing elevations of about EL 445 to 450 ft. A Site Vicinity Map is included as Figure 1.

Proposed for construction is a new water booster station. The building will measure about 21 ft by 33 ft, and will consist of spread footings supporting masonry walls and wooden trusses. The interior slab-on-grade will have several equipment pads and a trench drain, while an exterior slab will support a generator. We anticipate a finished floor elevation of about EL 448 ft.

We obtained the project information from a review of the Request For Proposal (RFP) documents, the Phase 1 Sewer System site plans and Phase 1 Water System site plans by Dewberry, preliminary water booster station drawings by Dewberry, through communication with your office, and through our site visits.

T/ 434-975-3200 F/ 434-975-3233
480 Four Seasons Drive / Charlottesville, VA / 22901

SUBSURFACE EXPLORATION AND LABORATORY TESTING PROGRAM

We performed a subsurface exploration and field testing program to identify the subsurface stratigraphy underlying the site and to evaluate the geotechnical properties of the materials encountered. This program included test borings. Exploration methods used are discussed below. The appendices contain the results of our exploration.

Subsurface Exploration Methods

Test Borings

Schnabel's subcontractor, Ayers and Ayers, Inc. drilled three test borings under our observation on February 3, 2017. The Standard Penetration Test (SPT) was performed at selected depths in the borings. Appendix A includes specific observations, remarks, and logs for the borings; classification criteria; drilling methods; and sampling protocols. Figure 2, included at the end of this report, indicates the approximate test boring locations. We will retain soil samples up to 45 days beyond the issuance of this report, unless you request other disposition.

Soil Laboratory Testing

Our laboratory performed tests on selected samples collected during the subsurface exploration. The testing aided in the classification of materials encountered in the subsurface exploration and provided data for use in the development of recommendations for design of foundations, earthwork, and pavements. The results of the laboratory tests are included in Appendix B and are summarized for each stratum in the Site Geology and Subsurface Conditions section of this report. Selected test results are also shown on the boring logs in Appendix A.

Index Testing

We performed index testing on samples collected as part of the exploration to provide soil classifications and to provide parameters for use with published correlations with soil properties. Index testing included performing natural moisture content, Atterberg Limits, and gradation tests on three jar samples and one bulk sample of soil representing Strata C1 and C2.

Compaction and CBR Testing

We performed Standard Proctor compaction and CBR testing to evaluate compaction characteristics and to provide soil parameters for pavement design. Testing was performed on a bulk sample representing Stratum C1.

SITE GEOLOGY AND SUBSURFACE CONDITIONS

Site Geology

We reviewed existing geologic data and information in our files. Based on this review, the geologic stratigraphy consists of residual soils. Residual soils are derived through the in-place physical and chemical weathering of the underlying rock. The underlying parent rock consists of metagraywacke, quartzose schist, and mélange of Cambrian to late Proterozoic age.

©2017 All Rights Reserved

Generalized Subsurface Stratigraphy

We characterized the following generalized subsurface stratigraphy based on the exploration and laboratory test data included in the appendices.

Ground Cover:

All borings encountered a layer of rootmat and topsoil at the ground surface with a depth of about 3 inches.

Stratum C1: Fine-Grained Residuum

Below the surface layer, the borings encountered residual soils of Strata C1 and C2. Fine-grained residual soils of Stratum C1 consisted of silt (ML), lean clay (CL), and fat clay (CH) with varying amounts of sand, rock fragments, and root fragments. These soils were generally observed to have moderate to high plasticity. Three samples were tested to have liquid limits varying between 41 and 71, with plasticity indices from 18 to 38. The natural moisture contents measured varied from 22 to 39 percent, with an average of 27 percent. Based on the Standard Penetration Tests performed, the fine-grained soils of this stratum are generally medium stiff to hard consistency, with N values of 5 to 45.

We performed a Standard Proctor Compaction test and a CBR test on a bulk sample representing Stratum C1. The sample consisted of lean clay with sand, and classified (CL)/(A-7-6) in accordance with ASTM and AASHTO classification systems. The compaction test resulted in a maximum dry density of 111.1 pcf at an optimum moisture content of 15.6 percent. Natural moisture content values of Stratum C1 soils tested in our laboratory varied from 6 to 24 percent above the optimum value. We obtained a laboratory CBR value of 5.0 with a swell value of 1.9 percent for this sample.

Laboratory tests performed on samples representing Stratum C1 indicate these soils exhibit a medium to high potential for moisture-related volume change (shrink/swell behavior).

Stratum C2: Coarse-Grained Residuum

Coarse-grained residual soils of Stratum C2 consisted of silty sand (SM) with varying amounts of root fragments and gravel-sized rock fragments. These soils were generally observed to have moderate to high plasticity. One sample was tested to have a liquid limit of 54, with a plasticity index of 22. The natural moisture contents measured were 12 and 21 percent. Based on the Standard Penetration Tests performed, the coarse-grained residual soils are generally medium dense to dense, with N values of 17 to 38.

Laboratory tests performed on samples representing Stratum C2 indicate these soils exhibit a low to medium potential for moisture-related volume change (shrink/swell behavior).

Stratum D: Disintegrated Rock

Below Stratum C-2, Boring B-11 encountered disintegrated rock from about 17 to 19.5 ft. Disintegrated rock is defined as residual material with SPT N values between 60 blows per foot and refusal. Refusal is defined as an N value of 50 blows for a penetration of one inch or less. We did not observe sampler or auger refusal. The disintegrated rock of Stratum D was sampled as very dense silty sand (SM).

©2017 All Rights Reserved

Groundwater

We did not observe groundwater in the borings, and they caved dry at depths of 1.5 to 7 ft. The test boring logs in Appendix A include groundwater and cave-in observations obtained during our subsurface exploration. We did not obtain long-term water level readings since we backfilled them upon completion for safety.

The groundwater levels on the logs indicate our estimate of the hydrostatic water table at the time of our subsurface exploration. The final design should anticipate the fluctuation of the hydrostatic water table depending on variations in precipitation, surface runoff, pumping, evaporation, leaking utilities, stream levels, and similar factors.

Seismic Site Classification

We evaluated the Seismic Site Class for this project according to the International Building Code (IBC) Section 1615 (2012). Our analysis indicates Site Class D for this location. This Site Class was evaluated based on observed and extrapolated SPT values.

GEOTECHNICAL RECOMMENDATIONS

We based our geotechnical engineering analysis on the information developed from our subsurface exploration and soil laboratory testing, along with the project development plans, site plans, and structural drawings furnished to our office. We recommend spread footing foundations for support of the proposed water booster station based on our analysis. The following sections of the report provide our detailed recommendations.

Site Grading and Earthwork

We anticipate proposed site grades will require cut and fill placement of less than 2 ft, but trench excavations will be required for associated utilities. Recommendations for compacted fill subgrade preparation, fill soil requirements, and placement and compaction criteria are presented in subsequent sections.

Compacted Fill Subgrades

Subgrades to receive compacted structural fill for structure or pavement support should be stripped of vegetation, topsoil, and organic matter. Schnabel's subsurface exploration indicated topsoil to depths of about 3 inches below the ground surface. However, stripping typically results in some disturbance and contamination of near-surface soils, particularly during periods of wet weather. Therefore, we recommend a topsoil stripping depth of 6 inches be considered for the site during the project planning.

Compacted structural fill subgrades should consist of suitable soils of Stratum C1 or C2. These soils are expected to be encountered at shallow depths beneath the topsoil and root mat.

The Geotechnical Engineer should evaluate the suitability of the fill subgrades. The stripped subgrades should be proofrolled with a loaded dump truck to evaluate the subgrade suitability for support of the compacted structural fill prior to any undercutting or initiation of fill placement. Areas that exhibit

©2017 All Rights Reserved

excessive pumping, weaving, or rutting should be scarified, dried and recompacted, or undercut and replaced with compacted structural fill as recommended by the Geotechnical Engineer. Subgrade evaluation techniques complementary to proofrolling could include a combination of probing with a penetrometer, drilling hand augers, or observing test pits.

If stripping and earthwork operations are performed during an extended period of warm, dry weather, the non-organic portions of the undercut materials may be reused as compacted structural fill. The use of these materials as compacted structural fill will depend on the soil moisture content, and the Contractor's ability to limit contamination of these materials with organic matter during stripping and undercutting. The Contractor may need to scarify and dry these soils to achieve adequate compaction.

When removal of unsuitable materials is required, the excavation should be performed in a manner to limit disturbance of the underlying suitable material. The excavation should be performed under the observation of the Geotechnical Engineer to evaluate required excavation depths.

Undercut volumes should be evaluated by cross sectioning. Other methods of calculating volumes of undercut, such as counting trucks, are less accurate and generally result in additional expense.

Compacted structural fill subgrades should be kept free of ponded water. Compacted structural fill subgrades should also be free of snow, ice, and frozen soils. If snow, ice, or frozen soils are present at subgrade levels, these materials should be removed as recommended by the Geotechnical Engineer.

Compacted structural fill subgrades should not be steeper than about 4H:1V. If steeper slopes are present, subgrades should be benched to permit placement of horizontal lifts of fill.

Compacted Fill

Compacted structural fill and backfill should consist of non-organic on-site soils. If off-site borrow materials are needed, these soils should classify CL, ML, SC, SM, SP, SW, GC, GM, GP or GW according to ASTM D2487. Fill materials should not contain particles larger than 3 inches.

Compacted structural fill should be placed in maximum 8-inch thick horizontal, loose lifts. Fill should be compacted to at least 95 percent of the maximum dry density per ASTM D698 (Standard Proctor).

Backfill placed in excavations, trenches, and other areas that large compaction equipment cannot access should be placed in maximum 6-inch thick lifts. Backfill should meet the material, placement, and compaction requirements outlined above.

Successful re-use of the excavated, on-site soils as compacted structural fill will depend on their natural moisture contents during excavation. Laboratory test results indicate soils encountered in proposed borrow areas are wet of the optimum moisture content. Scarifying and drying of these soils should be anticipated to achieve the recommended compaction. Drying of these soils will likely result in some delays, and may not be possible during cooler, wetter weather. We recommend that the earthwork be performed during the warmer, drier times of the year.

©2017 All Rights Reserved

Spread Footings

We consider spread footings suitable for support of the proposed booster station. Footings should be supported on suitable natural soils of Strata C1 and C2, or on compacted structural fill. We recommend that footings supported on these soils be designed for a net allowable soil bearing pressure of 3,000 psf. This bearing pressure provides a factor of safety against general bearing capacity failure of at least 3.0.

The above allowable soil bearing pressure may be increased by 33 percent for wind and seismic loads when used in conjunction with load combinations defined in IBC 2012 Section 1605.3.2, Alternative Basic Load Combinations for use with allowable stress design. This increase is not applicable for other allowable stress load combinations, strength design, or load and resistance factor design.

Spread footing subgrades should be observed by the Geotechnical Engineer prior to placement of concrete to evaluate if subgrade materials are as anticipated. If unsuitable soils are encountered at the design bearing grade, these soils should be removed and replaced as recommended by the Geotechnical Engineer. Unsuitable soils should be replaced with compacted structural fill, dense graded aggregate, controlled low strength material (CLSM), or concrete.

Settlements of foundations supported on suitable natural soils and on properly placed compacted structural fill are not expected to exceed about 1 inch. Differential settlements between similarly loaded footings are not expected to exceed about half this value.

Column and wall footings should be at least 24 and 16 inches wide, respectively, for shear considerations. Exterior footings should be founded at least 2 ft below final exterior grades for frost protection. Interior footings may be founded at nominal depths below the floor slabs. Interior footings subject to freezing should be founded at least 2 ft below slab grade. Where bearing grades between adjacent footings vary, the slope between the bottom edges of adjacent footings should not be steeper than 45 degrees (1H:1V).

If the high plasticity (MH or CH) soils of Stratum C1 are encountered at the foundation bearing elevation, we recommend footings be lowered to provide a minimum embedment of at least 3 ft below final exterior grades to limit the potential for damage due to moisture-related volume change of foundation soils.

To further limit the potential for damage from moisture-related volume change of foundation soils, site grades should be set to permit positive drainage of surface water away from the tank. Trees should not be planted within 25 ft of the foundation.

Floor Slabs

The proposed floor slabs should be supported on suitable natural soils of Strata C1 and C2 or compacted structural fill. A modulus of subgrade reaction, k, of 100 pci should be used in the design of floor slabs. The recommended modulus value is for a 1-ft-square plate. Some slab design software may consider different definitions of k for input. The Structural Engineer should contact our office if their software considers a different definition of k.

©2017 All Rights Reserved

A four-inch crushed stone or washed gravel capillary moisture barrier should underlie floor slabs on grade. Moisture barrier material should consist of VDOT No. 57 crushed stone. The Contractor should compact the stone in place with at least two passes of suitable vibratory compaction equipment.

The Contractor should compact floor slab subgrades to repair any disturbance that may occur due to construction operations before placing capillary moisture barrier materials. Since floors will be slab-on-grade, footing and utility excavations should be backfilled with compacted structural fill as defined in the Site Grading and Earthwork section of this report.

Pavements

The Contractor should prepare pavement subgrades and place compacted structural fill for pavement support as described in the Site Grading and Earthwork section of this report. Dense-graded aggregate placed as pavement base course should be compacted to at least 95 percent of maximum dry density according to ASTM D698, Standard Proctor. Dense-graded aggregate should be placed in maximum 8-inch thick loose lifts.

Final pavement subgrades should be proofrolled under the observation of the Geotechnical Engineer immediately prior to placing subbase or base course aggregate to evaluate their suitability to support the pavement.

We developed the recommended pavement sections according to the AASHTO 1993 design method for flexible pavements based on a design CBR value of 3.3. This design CBR value represents two-thirds of the laboratory value. The Type I Section should be used only in areas where truck traffic is not anticipated, while the Type II Section considers light truck traffic.

Our analysis considers that proper grading will be maintained to provide runoff from the pavement surface and beyond the limits of paved areas. We recommend the following pavement sections:

Table 1: Pavement Sections

Type Section	Thickness (inches)
Gravel Pavement Section – Type I Section	
Dense-Graded Aggregate Base Course, VDOT 21B	8
Asphalt Pavement Section – Type II Section	
Asphalt Concrete Surface Course, VDOT SM-9.5A	1.5
Asphalt Concrete Intermediate Course, VDOT IM-19.0A	2
Dense-Graded Aggregate Subbase Course, VDOT 21B	6

We recommend that reinforced concrete pavement be used in approach pad areas. These pads should be designed based on a modulus of subgrade reaction value, k, of 100 pci. The recommended modulus value is for a 1-ft-square plate. Some pavement design software may consider different definitions of k for input. The Civil Engineer should contact our office if their software considers a different definition of k.

©2017 All Rights Reserved

Adequate control of surface drainage will be a very important consideration for the overall performance of this pavement design. The area surrounding pavements should be graded to direct surface water away from paved areas. Utility excavations within pavement areas should be backfilled with compacted structural fill.

CONSTRUCTION CONSIDERATIONS

Site Grading and Earthwork

The test boring data indicate the approximate depth of topsoil based on our visual identification procedures. The depth of stripping needed to provide a suitable base for placement of earthwork or pavements may include topsoil and other softer surficial layers. Stripping depths in previously cultivated areas will be greater, particularly during periods of wet weather. The depth of required stripping should be determined by the excavation Contractor prior to construction using test pits, probes, or other means.

The on-site soils are susceptible to moisture changes, will be easily disturbed, and will be difficult to compact under wet weather conditions. Drying and reworking of the soils are likely to be difficult during periods of wet months. We recommend that the earthwork phases of this project be performed during the warmer, drier times of the year to limit the potential for disturbance of on-site soils.

The soils at this site consist primarily of moderately to highly plastic clays and silts. These soils are moisture sensitive, and will become readily disturbed by construction traffic on exposed surfaces of wet subgrades. We recommend avoiding wet weather site preparation and grading activities. If wet weather work is performed, the quantities of disturbed soils to be excavated can be expected to increase.

Traffic on stripped or undercut subgrades should be limited to reduce disturbance of underlying soils. Also, using lightweight, track-mounted dozer equipment for stripping will limit the disturbance of underlying soils, and may reduce the undercut volume needed. The Contractor should provide site drainage to maintain subgrades free of water and to avoid saturation and disturbance of the subgrade soils before placing compacted structural fill, pavement base course or moisture barrier material. This site drainage will be important during all phases of the construction work. The Contractor should be responsible for reworking of subgrades and compacted structural fill that were initially considered suitable but were later disturbed by equipment and/or weather.

Spread Footings

The Contractor should exercise care during excavation for spread footings so that as little disturbance as possible occurs at the foundation level. The Contractor should carefully clean loose or soft soils from the bottom of the excavation before placing concrete. A Geotechnical Engineer from our firm should observe footing subgrades prior to concrete placement to evaluate whether subgrade soils are as anticipated in this report.

Footing subgrades needing undercut should be concreted at the elevation of undercut or backfilled to the original design subgrade elevation with compacted structural fill, dense graded aggregate, controlled low strength material (CLSM), or lean concrete. We do not recommend open-graded crushed stone backfill since this material provides a path for moisture to reach subgrade soils, resulting in an increased potential

©2017 All Rights Reserved

for shrink/swell related distress. The Contractor should place footing concrete immediately after excavation of the footing to prevent accumulation of water in the excavation or drying of foundation soils.

The potential for variation of moisture content in foundation soils is probably greatest during construction. If the moisture content of foundation soils increases or decreases during construction, a moisture-related change in volume will likely occur as these soils return to their natural moisture content. Therefore, prompt placement of concrete, backfilling, and grading are very important for proper foundation performance.

Engineering Services During Construction

The engineering recommendations provided in this report are based on the information obtained from the subsurface exploration and laboratory testing. However, conditions on the site may vary between the discrete locations observed at the time of our subsurface exploration. The nature and extent of variations between borings may not become evident until during construction.

To account for this variability, we should provide professional observation and testing of subsurface conditions revealed during construction as an extension of our engineering services. These services will also help in evaluating the contractor's conformance with the plans and specifications in accordance with building code requirements. Because of our unique position to understand the intent of the geotechnical engineering recommendations, retaining Schnabel for these services will allow the owner to receive consistent service throughout the project construction.

General Specification Recommendations

An allowance should be established to account for possible additional costs that may be required to construct earthwork and foundations as recommended in this report. Additional costs may be incurred for a variety of reasons including variation of soil between borings, greater than anticipated unsuitable soils, need for borrow fill material, wet on-site soils, obstructions, etc.

The project specifications should indicate the Contractor's responsibility for providing adequate site drainage during construction. Inadequate drainage will most likely lead to disturbance of soils by construction traffic and increased volume of undercut.

This report may be made available to prospective bidders for informational purposes. We recommend that the project specifications contain the following statement:

> *Schnabel Engineering, LLC, has prepared this geotechnical engineering report for this project. This report is for informational purposes only and is not part of the contract documents. The opinions expressed represent the Geotechnical Engineer's interpretation of the subsurface conditions, tests, and the results of analyses performed. Should the data contained in this report not be adequate for the Contractor's purposes, the Contractor may make, before bidding, independent exploration, tests and analyses. This report may be examined by bidders at the office of the Owner, or copies may be obtained from the Owner at nominal charge.*

©2017 All Rights Reserved

Additional data and reports prepared by others that could have an impact upon the Contractor's bid should also be made available to prospective bidders for informational purposes.

LIMITATIONS

We based the analyses and recommendations submitted in this report on the information revealed by our exploration. We attempted to provide for normal contingencies, but the possibility remains that unexpected conditions may be encountered during construction.

This report has been prepared to aid in the evaluation of this site and to assist in the design of the project. It is intended for use concerning this specific project. We based our recommendations on information on the site and proposed construction as described in this report. Substantial changes in loads, locations, or grades should be brought to our attention so we can modify our recommendations as needed. We would appreciate an opportunity to review the plans and specifications as they pertain to the recommendations contained in this report, and to submit our comments to you based on this review.

We have endeavored to complete the services identified herein in a manner consistent with that level of care and skill ordinarily exercised by members of the profession currently practicing in the same locality and under similar conditions as this project. No other representation, express or implied, is included or intended, and no warranty or guarantee is included or intended in this report, or other instrument of service.

We appreciate the opportunity to be of service for this project. Please call us if you have any questions regarding this report.

Sincerely,

SCHNABEL ENGINEERING, LLC

Noland M. Silman, PE
Project Engineer

COMMONWEALTH OF VIRGINIA
NOLAND SILMAN
Lic. No. 050054
PROFESSIONAL ENGINEER

Jeremy L. Mydlinski, PE
Senior Associate

COMMONWEALTH OF VIRGINIA
JEREMY L. MYDLINSKI
Lic. No. 033936
PROFESSIONAL ENGINEER

Jeremy Mydlinski - VA rmoser

NMS:JLM:rmm

Figures
Appendix A: Subsurface Exploration Data
Appendix B: Soil Laboratory Test Data

©2017 All Rights Reserved

FIGURES

Figure 1: Site Vicinity Map
Figure 2: Boring Location Plan

©2017 All Rights Reserved

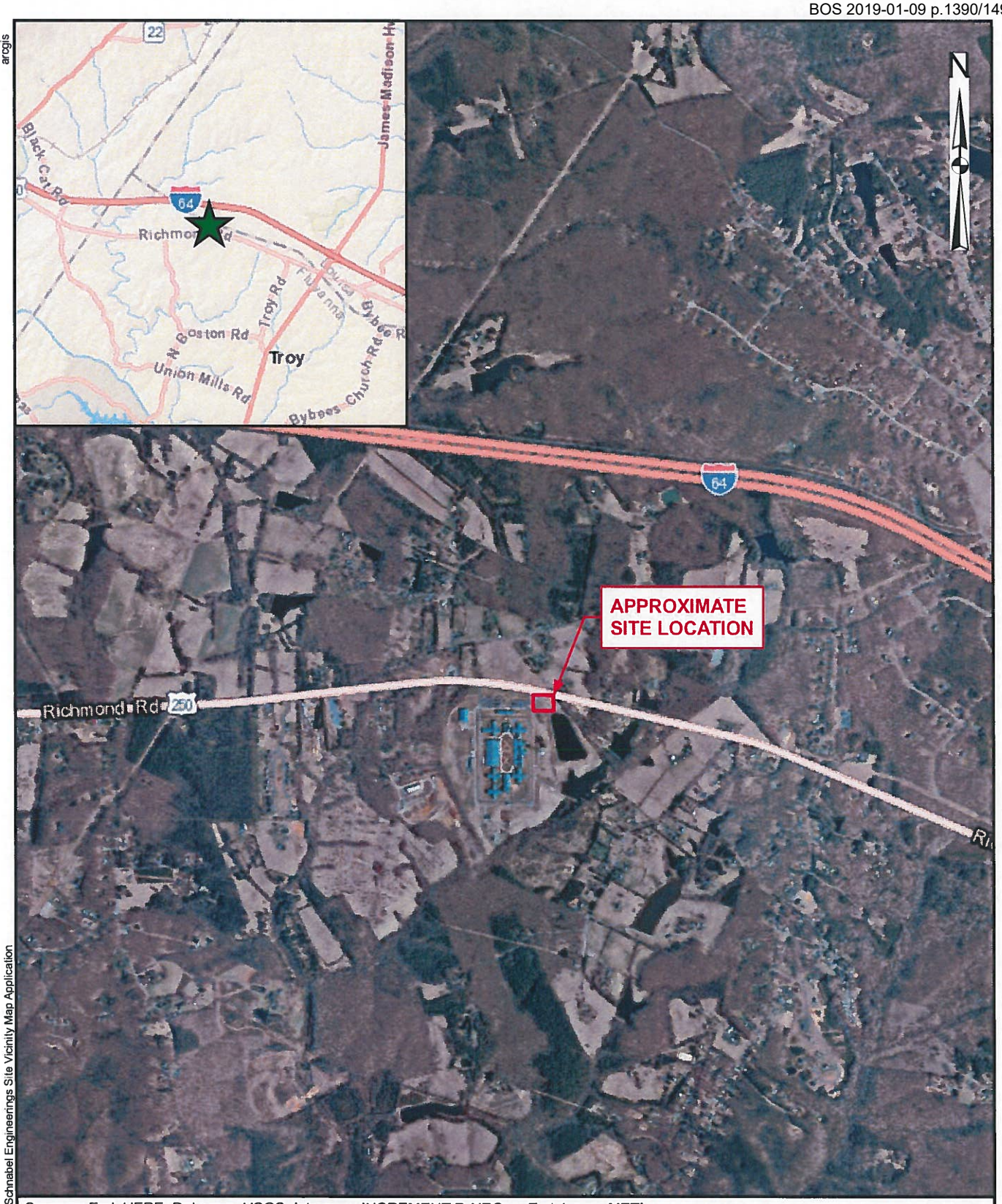

Sources: Esri, HERE, DeLorme, USGS, Intermap, INCREMENT P, NRCan, Esri Japan, METI, Esri China (Hong Kong), Esri Korea, Esri (Thailand), MapmyIndia, NGCC, © OpenStreetMap contributors, and the GIS User Community
Esri, HERE, DeLorme, MapmyIndia, © OpenStreetMap contributors

NOT TO SCALE

Schnabel ENGINEERING

ZION CROSSROADS WATER AND SEWER SYSTEM
ROUTE 250 AND ROUTE 15
FLUVANNA COUNTY, VIRGINIA

PROJECT NO. 16C13175 Task 02

SITE VICINITY MAP

FIGURE 1

© Schnabel Engineering, 2017. All Rights Reserved.

arcgis
3/1/2017 This Map was Created in Schnabel Engineerings Site Vicinity Map Application

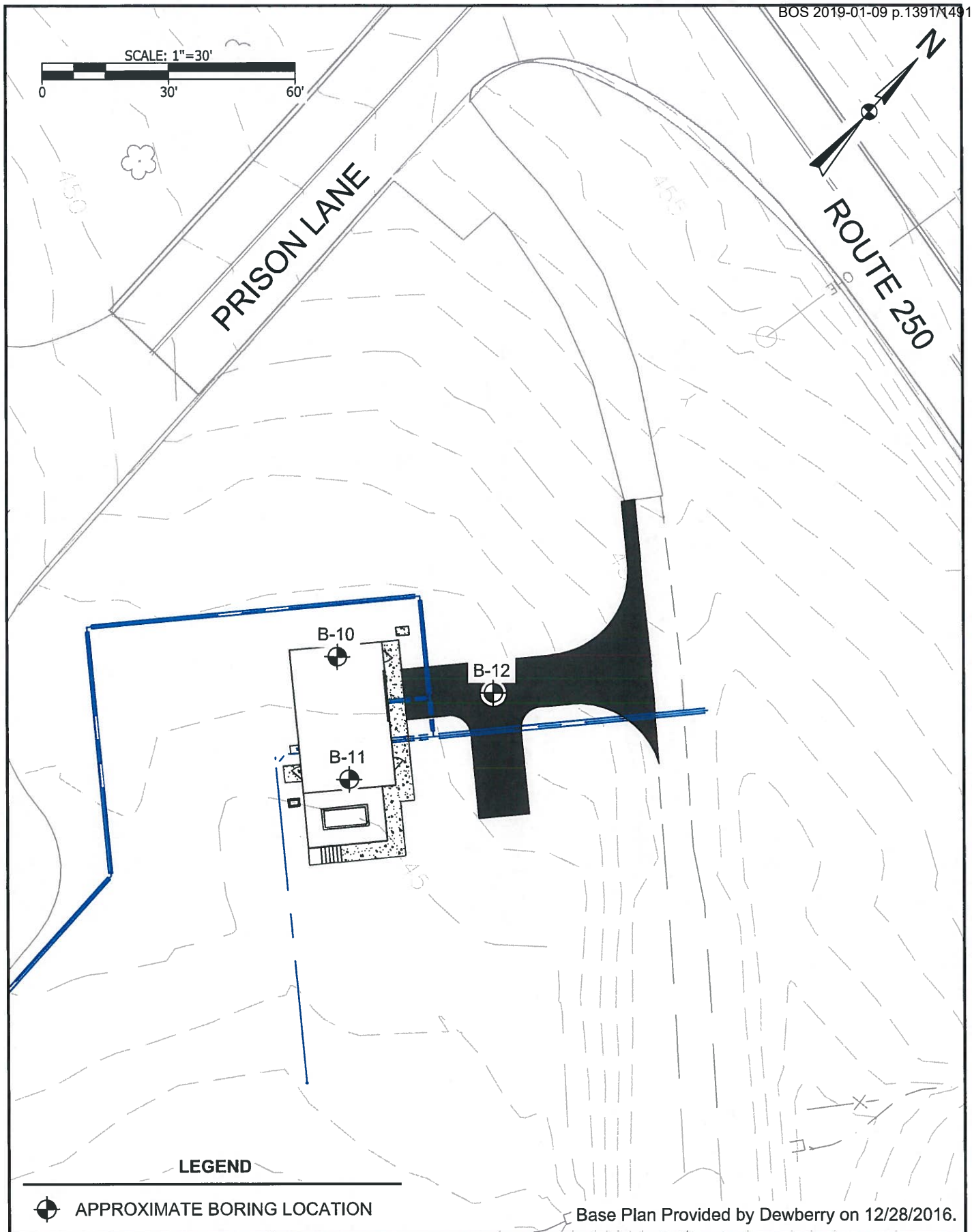

Schnabel ENGINEERING	ZION CROSSROADS WATER AND SEWER SYSTEM ROUTE 250 AND ROUTE 15 FLUVANNA COUNTY, VIRGINIA	Figure Name: BORING LOCATION PLAN	Done: K. POCTA	Figure Number: 2
		Project Number: 16C13175, TASK 02	Reviewed: J. MYDLINSKI	Date: MAR 2017

G:\2011 - 2020\2016\Richmond\16C13175 Zion Crossroads Water and Sewer\03-SE Products\08-CAD\Boring Location Plan.dwg, 3/1/2017 12:20:24 PM

APPENDIX A

SUBSURFACE EXPLORATION DATA

Subsurface Exploration Procedures
General Notes for Subsurface Exploration Logs
Identification of Soil
Boring Logs, B-10 through B-12

©2017 All Rights Reserved

SUBSURFACE EXPLORATION PROCEDURES

Test Borings – Hollow Stem Augers

The borings are advanced by turning a continuous flight auger with a center opening of 2¼ inches. A plug device blocks off the center opening while augers are advanced. Cuttings are brought to the surface by the auger flights. Sampling is performed through the center opening in the hollow stem auger, by standard methods, after removal of the plug. Usually, no water is introduced into the boring.

Standard Penetration Test Results

The numbers in the Sampling Data column of the boring logs represent Standard Penetration Test (SPT) results. Each number represents the blows needed to drive a 2-inch O.D., 1⅜-inch I.D. split-spoon sampler 6 inches, using a 140-pound hammer falling 30 inches. The sampler is typically driven a total of 18 inches. The first 6 inches are considered a seating interval. The total of the number of blows for the second and third 6-inch intervals is the SPT "N value." The SPT is performed according to ASTM D1586.

Soil Classification Criteria

The group symbols on the logs represent the Unified Soil Classification System Group Symbols (ASTM D2487) based on visual observation and limited laboratory testing of the samples. Criteria for visual identification of soil samples are included in this appendix. Some variation can be expected between samples visually classified and samples classified in the laboratory.

Disintegrated rock is defined as residual material with SPT N values between 60 blows per foot and refusal. Refusal is defined as an N value of 50 blows for a penetration of one inch or less.

Boring Locations and Elevations

Boring locations were located using sub-meter GPS equipment. Approximate boring locations are shown on Figure 2. Ground surface elevations at the boring locations were obtained from the site topographic plans and are indicated on the boring logs. Locations and elevations should be considered no more accurate than the methods used to determine them.

©2017 All Rights Reserved

GENERAL NOTES FOR SUBSURFACE EXPLORATION LOGS

1. Numbers in sampling data column next to Standard Penetration Test (SPT) symbols indicate blows required to drive a 2-inch O.D., 1⅜-inch I.D. sampling spoon 6 inches using a 140 pound hammer falling 30 inches. The Standard Penetration Test (SPT) N value is the number of blows required to drive the sampler 12 inches, after a 6 inch seating interval. The Standard Penetration Test is performed in general accordance with ASTM D1586.
2. Visual classification of soil is in accordance with terminology set forth in "Identification of Soil." The ASTM D2487 group symbols (e.g., CL) shown in the classification column are based on visual observations.
3. Estimated water levels indicated on the logs are only estimates from available data and may vary with precipitation, porosity of the soil, site topography, and other factors.
4. Refusal at the surface of rock, boulder, or other obstruction is defined as an SPT resistance of 50 blows for 1 inch or less of penetration.
5. The logs and related information depict subsurface conditions only at the specific locations and at the particular time when drilled or excavated. Soil conditions at other locations may differ from conditions occurring at these locations. Also, the passage of time may result in a change in the subsurface soil and water level conditions at the subsurface exploration location.
6. The stratification lines represent the approximate boundary between soil and rock types as obtained from the subsurface exploration. Some variation may also be expected vertically between samples taken. The soil profile, water level observations and penetration resistances presented on these logs have been made with reasonable care and accuracy and must be considered only an approximate representation of subsurface conditions to be encountered at the particular location.
7. Key to symbols and abbreviations:

☒	S-1, SPT	Sample No., Standard Penetration Test
	5+10+1	Number of blows in each 6-inch increment

LL	Liquid Limit
MC	Moisture Content (percent)
PL	Plastic Limit
%Passing#200	Percent by weight passing a No. 200 Sieve

©2017 All Rights Reserved

IDENTIFICATION OF SOIL

I. DEFINITION OF SOIL GROUP NAMES (ASTM D2487)

			SYMBOL	GROUP NAME
Coarse-Grained Soils More than 50% retained on No. 200 sieve	Gravels – More than 50% of coarse fraction retained on No. 4 sieve Coarse, ¾" to 3" Fine, No. 4 to ¾"	Clean Gravels Less than 5% fines	GW	WELL GRADED GRAVEL
			GP	POORLY GRADED GRAVEL
		Gravels with fines More than 12% fines	GM	SILTY GRAVEL
			GC	CLAYEY GRAVEL
	Sands – 50% or more of coarse Fraction passes No. 4 sieve Coarse, No. 10 to No. 4 Medium, No. 40 to No. 10 Fine, No. 200 to No. 40	Clean Sands Less than 5% fines	SW	WELL GRADED SAND
			SP	POORLY GRADED SAND
		Sands with fines More than 12% fines	SM	SILTY SAND
			SC	CLAYEY SAND
Fine-Grained Soils 50% or more passes the No. 200 sieve	Silts and Clays – Liquid Limit less than 50 Low to medium plasticity	Inorganic	CL	LEAN CLAY
			ML	SILT
		Organic	OL	ORGANIC CLAY
				ORGANIC SILT
	Silts and Clays – Liquid Limit 50 or more Medium to high plasticity	Inorganic	CH	FAT CLAY
			MH	ELASTIC SILT
		Organic	OH	ORGANIC CLAY
				ORGANIC SILT
Highly Organic Soils	Primarily organic matter, dark in color and organic odor		PT	PEAT

II. DEFINITION OF SOIL COMPONENT PROPORTIONS (ASTM D2487)

			Examples
Adjective Form	GRAVELLY SANDY	>30% to <50% coarse grained component in a fine-grained soil	GRAVELLY LEAN CLAY
	CLAYEY SILTY	>12% to <50% fine grained component in a coarse-grained soil	SILTY SAND
"With"	WITH GRAVEL WITH SAND	>15% to <30% coarse grained component in a fine-grained soil	FAT CLAY WITH GRAVEL
	WITH GRAVEL WITH SAND	>15% to <50% coarse grained component in a coarse-grained soil	POORLY GRADED GRAVEL WITH SAND
	WITH SILT WITH CLAY	>5% to <12% fine grained component in a coarse-grained soil	POORLY GRADED SAND WITH SILT

III. GLOSSARY OF MISCELLANEOUS TERMS

SYMBOLS ..... Unified Soil Classification Symbols are shown above as group symbols. A dual symbol "-" indicates the soil belongs to two groups. A borderline symbol "/" indicates the soil belongs to two possible groups.

FILL ..... Man-made deposit containing soil, rock and often foreign matter.

PROBABLE FILL ..... Soils which contain no visually detected foreign matter but which are suspect with regard to origin.

DISINTEGRATED ROCK (DR) ..... Residual materials with a standard penetration resistance (SPT) between 60 blows per foot and refusal. Refusal is defined as an SPT of 50 blows for 1" or less penetration.

BOULDERS & COBBLES..... Boulders are considered rounded pieces of rock larger than 12 inches, while cobbles range from 3 to 12-inch size.

MOISTURE CONDITIONS..... Wet, moist or dry to indicate visual appearance of specimen.

COLOR..... Overall color, with modifiers such as light to dark or variation in coloration.

©2017 All Rights Reserved

Schnabel ENGINEERING **TEST BORING LOG**

Project: Zion Crossroads Water and Sewer System
Route 250 and Route 15
Fluvanna County, Virginia

Boring Number: **B-10**
Contract Number: 16C13175 Task 02
Sheet: 1 of 1

Contractor: Ayers & Ayers, Inc.
Powhatan, Virginia
Contractor Foreman: M. White
Schnabel Representative: E. Bradshaw
Equipment: CME-45B (ATV)
Method: 2-1/4" ID Hollow Stem Auger

Hammer Type: Safety Hammer (140 lb)
Dates Started: 2/3/17 **Finished:** 2/3/17
Location: See Location Plan

Ground Surface Elevation: 447± (ft) **Total Depth:** 20.0 ft

Groundwater Observations

	Date	Time	Depth	Casing	Caved
Encountered	2/3	---	Dry	---	---
Completion	2/3	---	Dry	---	---
Casing Pulled	2/3	---	Dry	---	1.5'

DEPTH (ft)	MATERIAL DESCRIPTION	SYMBOL	ELEV (ft)	STRATUM	SAMPLING DEPTH	SAMPLING DATA	TESTS	REMARKS
0.3	Rootmat and topsoil; 3 inches		446.3					RESIDUUM
	SILTY SAND, fine to coarse grained sand; moist, brown, contains root fragments	SM		C2		S-01, SPT 5+9+8 REC=2", 11%		
2.0	SANDY SILT; moist, brown, contains root fragments	ML	444.5			S-02, SPT 5+4+5 REC=3", 17%		
4.0	FAT CLAY; moist, orangish brown, trace sand	CH	442.5		5	S-03, SPT 3+5+8 REC=10", 56%	LL = 71 PL = 33 MC = 35.7% % Passing #200 = 86.4	
7.0	SANDY SILT; moist, orangish brown	ML	439.5	C1		S-04, SPT 6+8+11 REC=18", 100%	MC = 39.4%	
					10	S-05, SPT 6+9+15 REC=14", 78%		
					15	S-06, SPT 9+21+24 REC=14", 78%	MC = 24.3%	
					20	S-07, SPT 7+10+13 REC=14", 78%		
20.0			426.5					

Bottom of Boring at 20.0 ft.
Boring terminated at selected depth.
Boring backfilled with cuttings upon completion.

TEST BORING LOG 16C13175 TASK 02 BOOSTER STATION KP EDITS.GPJ SCHNABEL DATA TEMPLATE 2008_07_06.GDT 3/2/17

Schnabel ENGINEERING — **TEST BORING LOG**

Project: Zion Crossroads Water and Sewer System
Route 250 and Route 15
Fluvanna County, Virginia

Boring Number: **B-11**
Contract Number: 16C13175 Task 02
Sheet: 1 of 1

Contractor: Ayers & Ayers, Inc.
Powhatan, Virginia
Contractor Foreman: M. White
Schnabel Representative: E. Bradshaw
Equipment: CME-45B (ATV)
Method: 2-1/4" ID Hollow Stem Auger

Hammer Type: Safety Hammer (140 lb)
Dates Started: 2/3/17 **Finished:** 2/3/17
Location: See Location Plan

Ground Surface Elevation: 446± (ft) **Total Depth:** 19.5 ft

Groundwater Observations

	Date	Time	Depth	Casing	Caved
Encountered	2/3	---	Dry	---	---
Completion	2/3	---	Dry	---	---
Casing Pulled	2/3	---	Dry	---	7.0'

DEPTH (ft)	MATERIAL DESCRIPTION	SYMBOL	ELEV (ft)	STRATUM	SAMPLING DEPTH	SAMPLING DATA	TESTS	REMARKS
0.3	Rootmat and topsoil; 3 inches		445.3					
	SANDY SILT; moist, brown, contains root fragments	ML				S-01, SPT 3+4+6 REC=8", 44%	MC = 22.2%	RESIDUUM
2.0	FAT CLAY WITH SAND; moist, light brown, contains rock fragments	CH	443.5	C1		S-02, SPT 2+2+3 REC=7.5", 42%	LL = 51 PL = 23 MC = 29.3% % Passing #200 = 71.2	
					5	S-03, SPT 3+4+4 REC=10", 56%	MC = 21.7%	
7.0	SILTY SAND WITH GRAVEL, fine to coarse grained sand; moist, brown, contains rock fragments	SM	438.5	C2		S-04, SPT 5+15+23 REC=12", 67%		
					10	S-05, SPT 3+9+18 REC=11", 61%	LL = 54 PL = 32 MC = 20.5% % Passing #200 = 43.0	
					15	S-06, SPT 7+14+16 REC=10", 56%	MC = 11.8%	
17.0	DISINTEGRATED ROCK, sampled as silty sand, fine; moist, brown, contains rock fragments	DR	428.5	D		S-07, SPT 19+50 REC=9", 75%		
19.5			426.0					

Bottom of Boring at 19.5 ft.
Boring terminated at selected depth.
Boring backfilled with cuttings upon completion.

Schnabel ENGINEERING **TEST BORING LOG**

Project: Zion Crossroads Water and Sewer System
Route 250 and Route 15
Fluvanna County, Virginia

Boring Number: **B-12**
Contract Number: 16C13175 Task 02
Sheet: 1 of 1

Contractor: Ayers & Ayers, Inc.
Powhatan, Virginia

Contractor Foreman: M. White

Schnabel Representative: E. Bradshaw

Equipment: CME-45B (ATV)

Method: 2-1/4" ID Hollow Stem Auger

Hammer Type: Safety Hammer (140 lb)

Dates Started: 2/3/17 **Finished:** 2/3/17

Location: See Location Plan

Ground Surface Elevation: 447± (ft) **Total Depth:** 5.0 ft

Groundwater Observations

	Date	Time	Depth	Casing	Caved
Casing Pulled	2/3	---	Dry	---	---
Completion	2/3	---	Dry	---	---
Encountered	2/3	---	Dry	---	---

DEPTH (ft)	MATERIAL DESCRIPTION	SYMBOL	ELEV (ft)	STRATUM	SAMPLING DEPTH	SAMPLING DATA	TESTS	REMARKS
0.3	Rootmat and topsoil; 3 inches		446.8					
	LEAN CLAY WITH SAND; moist, brown, contains root fragments	CL				S-01, SPT 3+5+5 REC=11", 61%	MC = 21.7% LL = 41 PL = 23 MC = 24.9% % Passing #200 = 75.5	RESIDUUM
2.0	SANDY FAT CLAY; moist, orangish brown	CH	445.0	C1		S-02, SPT 7+8+12 REC=11", 61%		
						S-03, SPT 3+6+6 REC=9", 50%		
5.0			442.0		5			

Bottom of Boring at 5.0 ft.
Boring terminated at selected depth.
Boring backfilled with cuttings upon completion.

TEST BORING LOG 16C13175 TASK 02 BOOSTER STATION KP EDITS.GPJ SCHNABEL DATA TEMPLATE 2008_07_06.GDT 3/2/17

APPENDIX B

SOIL LABORATORY TEST DATA

Summary of Laboratory Tests
Gradation Curves
Atterberg Limits
Moisture Density Relationship

©2017 All Rights Reserved

Summary Of Laboratory Tests

Boring No.	Sample Depth ft / Elevation ft	Sample Type	Description of Soil Specimen	Testing Laboratory	Stratum	Natural Moisture (%)	Liquid Limit	Plastic Limit	Plasticity Index	% Passing No. 200 Sieve	% Passing No. 40 Sieve	% Retained No. 4 Sieve	Maximum Dry Density (pcf)	Optimum Moisture Content (%)	CBR Dry Density At Compaction (pcf)	CBR Moisture Content (%)	CBR Percent Swell	CBR Value
B-10	4.0 - 5.5 / 441.5 - 440.0	Jar	FAT CLAY (CH), trace sand, orangish brown and gray	RICH	C1	35.7	71	33	38	86.4	94.5	2.2	--	--	--	--	--	--
B-11	2.0 - 3.5 / 444.5 - 443.0	Jar	FAT CLAY WITH SAND (CH), contains rock fragments, orangish brown and gray	RICH	C1	29.3	51	23	28	71.2	85.9	4.1	--	--	--	--	--	--
B-11	9.0 - 10.5 / 437.5 - 436.0	Jar	SILTY SAND WITH GRAVEL (SM), fine to coarse grained sand, contains rock fragments, light brown and gray	RICH	C2	20.5	54	32	22	43.0	61.8	18.7	--	--	--	--	--	--
B-12	0.0 - 5.0 / 446.5 - 441.5	Bulk	LEAN CLAY WITH SAND (CL, A-7-6), light brown	RICH	C1	24.9	41	23	18	75.5	89.3	2.2	111.1	15.6	111.9	15.8	1.9	5.0

Notes:
1. Soil tests in general accordance with ASTM standards.
2. Soil classifications are in general accordance with ASTM D2487(as applicable), based on testing indicated and visual classification.
3. Key to abbreviations: NP=Non-Plastic; -- indicates no test performed

Schnabel ENGINEERING

Project: Zion Crossroads Water and Sewer System
Route 250 and Route 15
Fluvanna County, VA

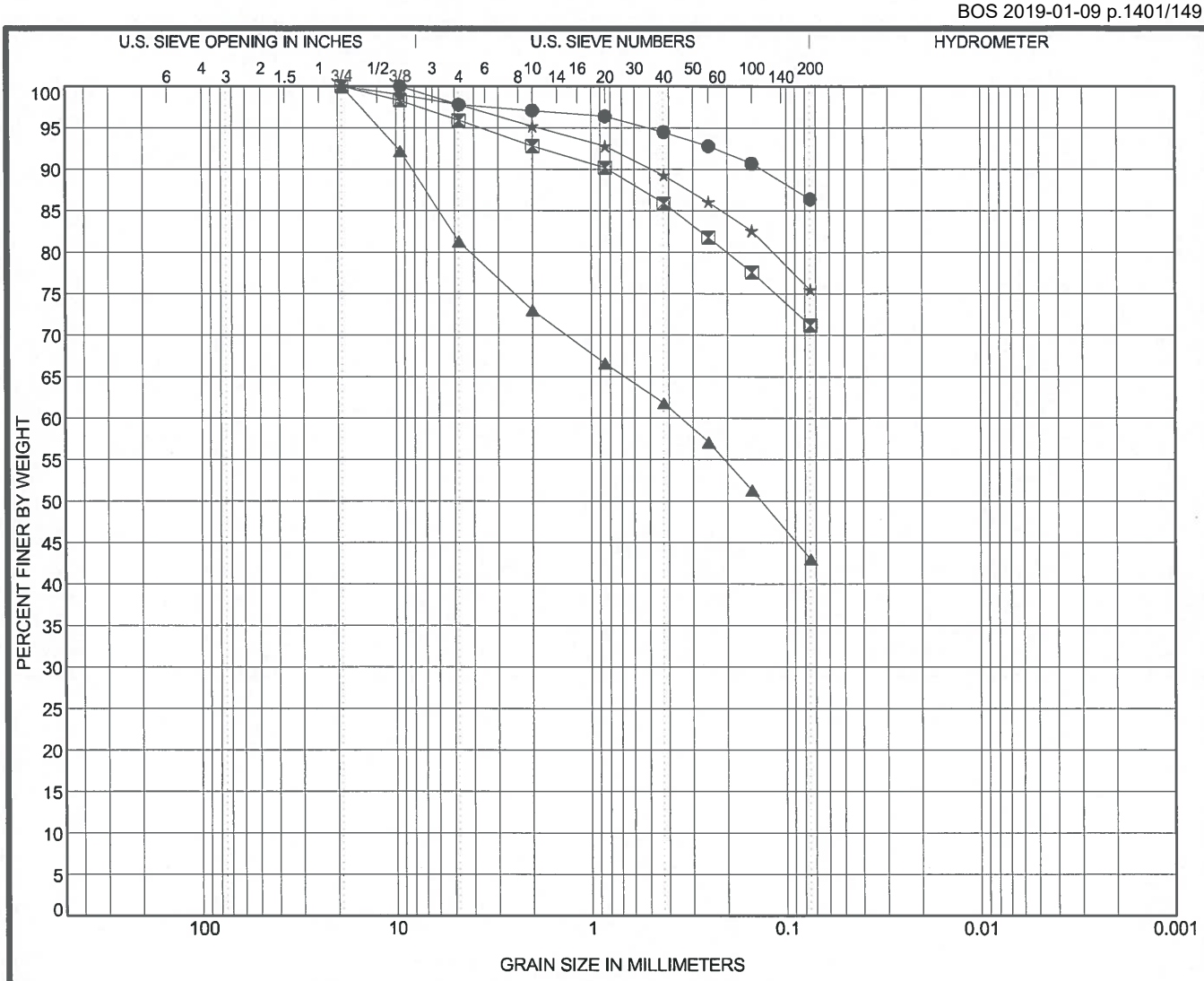

COBBLES	GRAVEL		SAND			SILT OR CLAY
	coarse	fine	coarse	medium	fine	

	Specimen		Sample Description	LL	PL	PI		
●	B-10	4.0 ft	FAT CLAY (CH), trace sand, orangish brown and gray	71	33	38		
⊠	B-11	2.0 ft	FAT CLAY WITH SAND (CH), contains rock fragments, orangish brown and gray	51	23	28		
▲	B-11	9.0 ft	SILTY SAND WITH GRAVEL (SM), fine to coarse grained sand, contains rock fragments, light brown and gray	54	32	22		
★	B-12	0.0 ft	LEAN CLAY WITH SAND (CL, A-7-6), light brown	41	23	18		

	Specimen		Test Method	Testing Lab	D100	D60	D30	D10	%Gravel	%Sand	%Silt	%Clay
●	B-10	4.0 ft	ASTM D422	RICH	9.5	–	–	–	2.2	11.4	86.4	
⊠	B-11	2.0 ft	ASTM D422	RICH	19	–	–	–	4.1	24.7	71.2	
▲	B-11	9.0 ft	ASTM D422	RICH	19	0.35	–	–	18.7	38.3	43.0	
★	B-12	0.0 ft	ASTM D422	RICH	19	–	–	–	2.2	22.3	75.5	

Schnabel ENGINEERING

GRADATION CURVES

Project: Zion Crossroads Water and Sewer System
Route 250 and Route 15
Fluvanna County, VA

Contract: 16C13175 Task 02

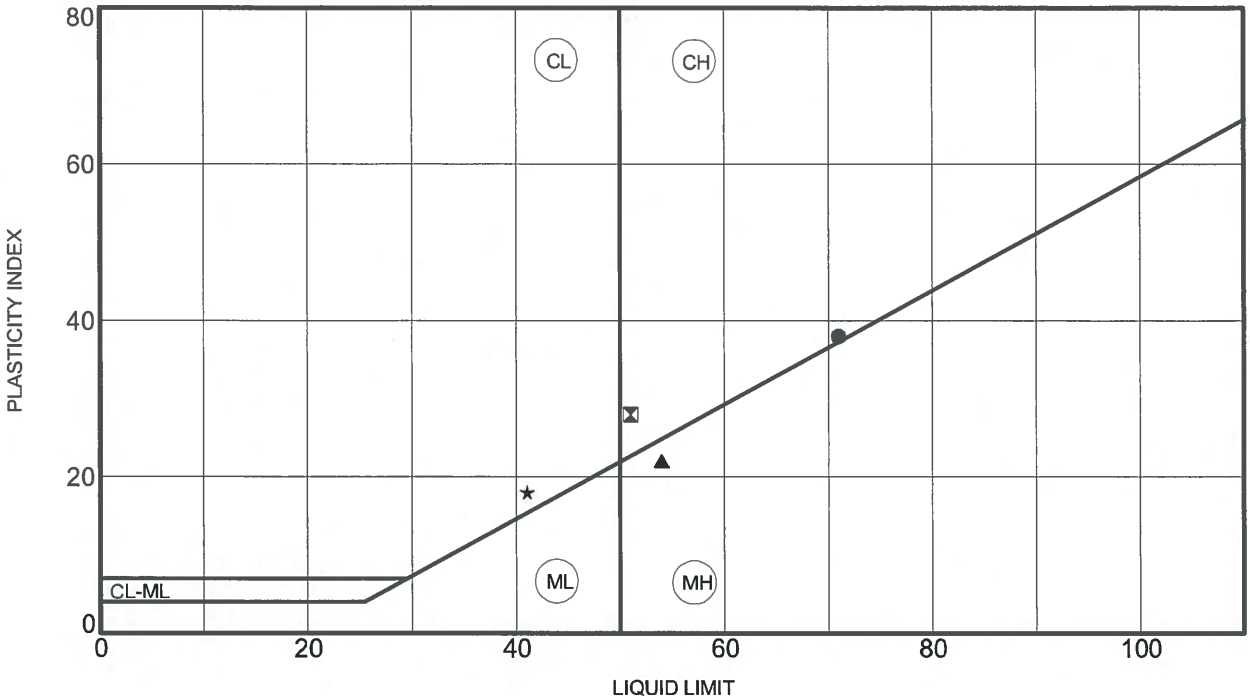

PLOTTED DATA REPRESENTS SOIL PASSING NO. 40 SIEVE

	Specimen		LL	PL	PI	Fines	Testing Lab	Description
●	B-10	4.0 ft	71	33	38	86	RICH	FAT CLAY (CH), trace sand, orangish brown and gray
⊠	B-11	2.0 ft	51	23	28	71	RICH	FAT CLAY WITH SAND (CH), contains rock fragments, orangish brown and gray
▲	B-11	9.0 ft	54	32	22	43	RICH	SILTY SAND WITH GRAVEL (SM), fine to coarse grained sand, contains rock fragments, light brown and gray
★	B-12	0.0 ft	41	23	18	76	RICH	LEAN CLAY WITH SAND (CL, A-7-6), light brown

Schnabel ENGINEERING

ATTERBERG LIMITS

Project: Zion Crossroads Water and Sewer System
Route 250 and Route 15
Fluvanna County, VA

Contract: 16C13175 Task 02

ATTERBERG LIMITS 16C13175 COMBINED LOGS.GPJ SCHNABEL DATA TEMPLATE 2008 04 22.GDT 2/23/17

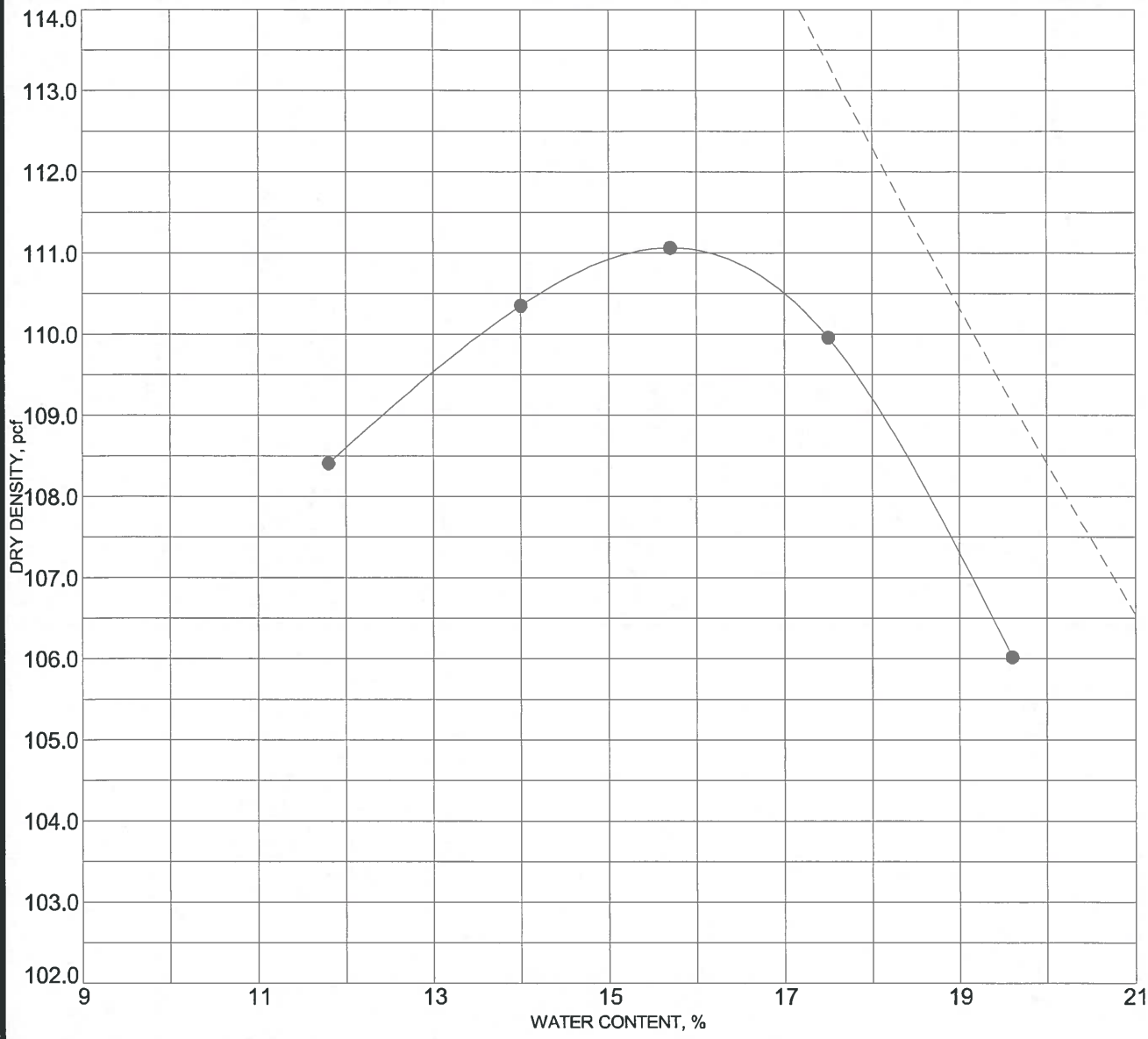

Sample Description:	LEAN CLAY WITH SAND (CL, A-7-6), light brown	Assumed Specific Gravity:	2.66
		Max. Dry Density (pcf):	111.1
		Opt. Moisture (%):	15.6
Sample Source:	B-12, 0.0 ft		
Test Methods:	VTM1		

Liquid Limit (LL):	41	Comments: Bulk sample obtained from auger cuttings over the depth interval 0 to 5.0 feet
Plasticity Index (PI):	18	
% Retained #4 Sieve:	2.2	
% Passing # 200 Sieve:	75.5	Date: 2-20-17 Reviewed By: DS

Schnabel ENGINEERING

MOISTURE DENSITY RELATIONSHIP

Project: Zion Crossroads Water and Sewer System
Route 250 and Route 15
Fluvanna County, VA

Contract: 16C13175 Task 02 **Testing Lab:**RICH

COMPACTION 16C13175 COMBINED LOGS.GPJ SCHNABEL DATA TEMPLATE 2008 04 22.GDT 2/23/17

ZION CROSSROADS
WATER BOOSTER PUMP STATION AND WASTEWATER PUMP STATION

FLUVANNA COUNTY DEPARTMENT OF PUBLIC WORKS

Drawing Index

GENERAL

G1.0 COVER SHEET
G2.0 GENERAL NOTES AND LEGEND

WASTEWATER PUMP STATION

CIVIL

C0.1 WWPS SITE OVERVIEW
C1.0 WWPS SITE LAYOUT AND PIPING PLAN
C1.1 WWPS GRADING AND EROSION & SEDIMENT CONTROL PLAN
C1.2 WWPS EROSION & SEDIMENT CONTROL NOTES & DETAILS
C1.3 WWPS EROSION & SEDIMENT CONTROL NOTES & DETAILS
C1.4 WWPS DETAILS
C1.5 WWPS DETAILS
C1.6 WWPS DETAILS
C1.7 WWPS PRE– AND POST– DEVELOPMENT DRAINAGE AREA MAPS
C1.7B ROUTE 15 CULVERT ANALYSIS
C1.8 WWPS SIGHT DISTANCE PLAN
C1.9 WWPS VDOT NOTES AND DETAILS

MECHANICAL

M1.0 WWPS LAYOUT
M1.1 WWPS SCHEDULES AND DETAILS
M1.2 WWPS DETAILS
M1.3 WWPS DETAILS

STRUCTURAL

S1.0 WWPS GENERAL STRUCTURAL NOTES
S1.1 WWPS FOUNDATION PLAN
S1.2 WWPS GENERATOR PAD AND PLATFORM DETAILS

ARCHITECTURAL

A1.0 WWPS LAYOUT
A1.1 WWPS DETAILS

INSTRUMENTATION

I1.0 WWPS PROCESS AND INSTRUMENTATION DIAGRAM
I1.1 WWPS PROCESS AND INSTRUMENTATION DIAGRAM

ELECTRICAL

E0.1 WWPS GENERAL ELECTRICAL DIAGRAMS AND NOTES
E1.0 WWPS ELECTRICAL DIAGRAMS AND NOTES
E1.1 WWPS ELECTRICAL SCHEDULES AND NOTES
E1.2 WWPS ELECTRICAL VIEWS AND NOTES

WATER BOOSTER PUMP STATION

CIVIL

C2.0 WBS SITE LAYOUT AND PIPING PLAN
C2.1 WBS OVERALL SITE PLAN
C2.2 WBS GRADING AND EROSION & SEDIMENT CONTROL PLAN
C2.3 WBS EROSION & SEDIMENT CONTROL NOTES
C2.4 WBS EROSION & SEDIMENT CONTROL DETAILS
C2.5 WBS DETAILS
C2.6 WBS PRE– AND POST– DEVELOPMENT DRAINAGE AREA MAPS

MECHANICAL

M2.0 WBS LAYOUT
M2.1 WBS SCHEDULES
M2.2 WBS DETAILS

STRUCTURAL

S2.0 WBS GENERAL STRUCTURAL NOTES
S2.1 WBS STRUCTURAL SCHEDULES AND DETAILS
S2.2 WBS FOUNDATION PLAN AND ROOF FRAMING PLAN
S2.3 WBS STRUCTURAL DETAILS
S2.4 WBS GENERATOR PAD AND PLATFORM DETAILS

ARCHITECTURAL

A2.0 WBS LAYOUT
A2.1 WBS DETAILS

INSTRUMENTATION

I2.0 WBS PROCESS AND INSTRUMENTATION DIAGRAM
I2.1 WBS PROCESS AND INSTRUMENTATION DIAGRAM

ELECTRICAL

E0.2 WBS GENERAL ELECTRICAL DIAGRAMS AND NOTES
E2.0 WBS ELECTRICAL DIAGRAMS
E2.1 WBS ELECTRICAL SCHEDULES AND NOTES
E2.2 WBS ELECTRICAL VIEWS AND NOTES

CONTACTS:

OWNER:
Fluvanna County
Department of Public Works
Wayne Stephens, PE
P.O. Box 540
197 Main Street
Palmyra, Virginia 22963
PH. (434)591–1925
FAX (434)591–1924
wstephens@fluvannacounty.org

ENGINEER:
Dewberry Engineers Inc.
Dan Villhauer, P.E.
4805 Lake Brook Drive, Suite 200
Glen Allen, Virginia 23060
PH. (804) 290–7957
FAX (804) 290–7928
dvillhauer@dewberry.com

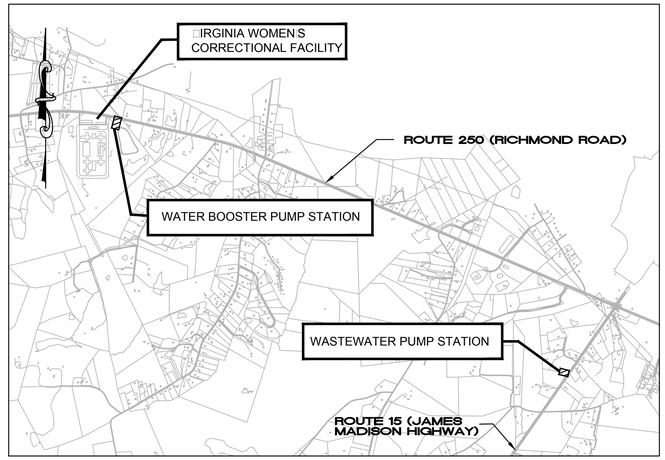

VICINITY MAP
SCALE : 1" = 2000'

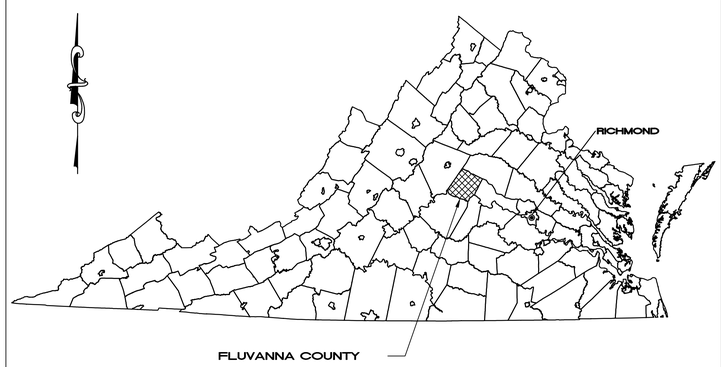

LOCATION MAP
NOT TO SCALE

THE DEWBERRY ENGINEERS INC. SEALING ENGINEER SHALL BE THE RESPONSIBLE LAND DISTURBER □RLD□FOR THIS PROJECT FOR APPRO□AL PURPOSES ONLY. ONCE THE PROJECT HAS BEEN AWARDED□ THE CONTRACTOR SHALL PRO□IDE AN RLD.

SUBMITTAL		SET NUMBER
☐ PRELIMINARY	☐ CONSTRUCTION	
☐ APPROVAL	☐ REVISION	
■ BIDDING	☐ RECORD	

PHASING NOTES:
1. THIS PROJECT SHALL CONSIST OF TWO PHASES. SUBSTANTIAL COMPLETION FOR PHASE 1 SHALL BE 360 DAYS FROM NOTICE TO PROCEED. SUBSTANTIAL COMPLETION FOR PHASE 2 SHALL BE 540 DAYS FROM NOTICE TO PROCEED. FINAL COMPLETION FOR BOTH PHASES WILL BE 600 DAYS FROM NOTICE TO PROCEED.
2. PHASE 1 SHALL CONSIST OF ALL WORK ASSOCIATED WITH THE CONSTRUCTION, INSPECTION, TESTING, COMPLETION, AND ACCEPTANCE OF THE WATER BOOSTER PUMP STATION:
   2.1. ALL WORK CONTAINED ON SHEETS C2.0 TO E2.2
3. PHASE 2 SHALL CONSIST OF ALL WORK ASSOCIATED WITH THE CONSTRUCTION, INSPECTION, TESTING, COMPLETION, AND ACCEPTANCE OF THE WASTEWATER PUMP STATION:
   3.1. ALL WORK CONTAINED ON SHEETS C1.0 TO E1.2

DEPARTMENT OF CORRECTIONS COORDINATION NOTE:
ALL PERSONNEL THAT WILL BE WORKING ON THE DEPARTMENT OF CORRECTIONS (DOC) PROPERTY SHALL BE SUBJECT TO ACCESS REQUIREMENTS AND REGULATIONS AS DEEMED APPROPRIATE BY THE DOC. THESE INCLUDE, BUT ARE NOT LIMITED TO, EACH EMPLOYEE PROVIDING A COPY OF THEIR DRIVER'S LICENSE, COMPLETING BACKGROUND CHECKS, PARTICIPATING IN PREA TRAINING, AND PARTICIPATING IN TOOL ACCOUNTABILITY. ALL PERSONNEL SHALL BE RESTRICTED FROM BRINGING TOBACCO, ALCOHOL, FIREARMS, ETC. ON THE DOC PROPERTY. FAILURE TO COMPLY WITH ANY OF THE AFOREMENTIONED CONDITIONS IS GROUNDS FOR SITE ACCESS RESTRICTIONS. A PRE–CONSTRUCTION MEETING WITH APPROPRIATE DOC PERSONNEL WILL BE REQUIRED PRIOR TO THE START OF CONSTRUCTION ON THE DOC PROPERTY TO DETERMINE EXACT ACCESS REQUIREMENTS AND PROCEDURES.

BOS 2019-01-09 p.1404/1491

Dewberry

Dewberry Engineers Inc.
4805 Lake Brook Drive, Suite 200
Glen Allen, Virginia 23060
PHONE: 804.290.7957
FAX: 804.290.7928
www.dewberry.com

ZION CROSSROADS
WATER BOOSTER PUMP STATION
AND WASTEWATER PUMP STATION
FLUVANNA COUNTY
DEPARTMENT OF PUBLIC WORKS
FLUVANNA COUNTY, VA

KEY PLAN

SEAL

COMMONWEALTH OF VIRGINIA
DANYLO A. VILLIHAUER
Lic. No. 046419
5/4/2018
PROFESSIONAL ENGINEER

SCALE

No.	DATE	BY	Description

REVISIONS

DRAWN BY	BMM & JEH
APPROVED BY	DAV
CHECKED BY	BJH
DATE	MAY 2018

TITLE

COVER SHEET

PROJECT NO. 50078863

G1.0

NOTES

GENERAL

1. CONTRACTOR SHALL IMMEDIATELY REPORT ANY DISCREPANCIES BETWEEN EXISTING CONDITIONS AND CONTRACT DOCUMENTS TO THE ENGINEER.
2. EXISTING CONDITIONS SHOWN ARE A COMBINATION OF AERIAL SURVEY AND SITE SURVEY PROVIDED BY BOWMAN CONSULTING GROUP IN DECEMBER 18, 2016.
2. THE "MISS UTILITY LAW" REQUIRES THE CONTRACTOR TO CALL (1–800–552–7001) AT LEAST 3 WORKING DAYS IN ADVANCE OF THE PLANNED WORK TO ALLOW TIME FOR MARKING, THAT THE MARKS BE RESPECTED AND PROTECTED, AND THAT EXCAVATION BE COMPLETED CAREFULLY.
3. CONTRACTOR SHALL BE RESPONSIBLE FOR SITE SECURITY AND JOB SAFETY. CONSTRUCTION WORK AND MATERIALS SHALL COMPLY WITH LOCAL REGULATIONS, STATE OF VIRGINIA REGULATIONS AND CODES, AND O.S.H.A. STANDARDS.
4. AREAS DISTURBED DURING CONSTRUCTION AND NOT RESTORED WITH IMPERVIOUS SURFACES (BUILDINGS, PAVEMENT, WALKS, ETC.) SHALL FOLLOW DETAIL PROVIDED BY VIRGINIA EROSION AND SEDIMENT CONTROL HANDBOOK FOR SITE SPECIFIC SEEDING MIXTURES IN ACCORDANCE WITH STANDARD & SPECIFICATION 3.32 UNLESS OTHERWISE STATED IN PROJECT SPECIFICATIONS.
5. UPON AWARD OF CONTRACT, CONTRACTOR SHALL MAKE NECESSARY CONSTRUCTION NOTIFICATIONS AND APPLY FOR AND OBTAIN NECESSARY PERMITS, PAY FEES, AND POST BONDS ASSOCIATED WITH THE WORK INDICATED ON THE DRAWINGS, IN THE SPECIFICATIONS, AND IN THE CONTRACT DOCUMENTS. DO NOT CLOSE OR OBSTRUCT ROADWAYS LEADING TO PROJECT SITE.
6. AREAS OUTSIDE THE LIMITS OF PROPOSED WORK DISTURBED BY THE CONTRACTOR'S OPERATION SHALL BE RESTORED BY THE CONTRACTOR TO THEIR ORIGINAL CONDITION AT THE CONTRACTOR'S EXPENSE.
7. IN THE EVENT THAT SUSPECTED CONTAMINATED SOIL, GROUNDWATER, AND OTHER MEDIA ARE ENCOUNTERED DURING EXCAVATION AND CONSTRUCTION ACTIVITIES BASED ON VISUAL, OLFACTORY (SMELL), OR OTHER EVIDENCE, THE CONTRACTOR SHALL STOP WORK IN THE VICINITY OF THE SUSPECT MATERIAL TO AVOID FURTHER SPREADING OF THE MATERIAL, AND SHALL NOTIFY THE ENGINEER IMMEDIATELY SO THAT THE APPROPRIATE TESTING AND SUBSEQUENT ACTION CAN BE TAKEN.
8. CONTRACTOR SHALL PREVENT DUST, SEDIMENT, AND DEBRIS FROM EXITING THE SITE AND SHALL BE RESPONSIBLE FOR CLEANUP, REPAIRS AND CORRECTIVE ACTION IF SUCH OCCURS.
9. DAMAGE RESULTING FROM CONSTRUCTION LOADS SHALL BE REPAIRED BY THE CONTRACTOR AT NO ADDITIONAL COST TO OWNER.
10. CONTRACTOR SHALL CONTROL STORMWATER RUNOFF DURING CONSTRUCTION TO PREVENT ADVERSE IMPACTS TO ON–SITE AND OFF–SITE AREAS, AND SHALL BE RESPONSIBLE TO REPAIR RESULTING DAMAGES, IF ANY, AT NO COST TO OWNER.
11. ALL CONTRACTOR LAYDOWN AREAS SHALL BE LOCATED WITHIN THE LIMITS OF DISTURBANCE LINE AS SHOWN ON THIS PLAN.
12. WHEN WORKING ADJACENT TO EXISTING STRUCTURES, POLES, ETC., CONTRACTOR SHALL USE WHATEVER METHODS THAT ARE NECESSARY TO PROTECT STRUCTURES FROM DAMAGE. REPLACEMENT OF DAMAGED STRUCTURES SHALL BE AT THE CONTRACTOR'S EXPENSE.
13. CONTRACTOR SHALL REMOVE ALL FENCES, SHRUBS, AND OTHER ENCUMBRANCES DISTURBED DURING CONSTRUCTION AND REPLACE OR RESTORE OUTSIDE OF VDOT RIGHT OF WAY.
14. CONTRACTOR SHALL ADJUST ALL APPURTENANCES AS REQUIRED TO MATCH NEW GRADES. THE EXACT LOCATION OF APPURTENANCES SHALL BE COORDINATED WITH THE OWNER.
15. CONTRACTOR SHALL VERIFY ALL DIMENSIONS, CONDITIONS, EXISTING INVERTS, ELEVATIONS, ETC. AND, NOTIFY ENGINEER IN WRITING OF ANY DISCREPANCIES PRIOR TO CONTINUING CONSTRUCTION OF THE WORK INVOLVED.

EXISTING CONDITIONS

1. HORIZONTAL DATUM IS NAD 83 AND THE VERTICAL DATUM IS NAVD 88 BASED ON A GPS SURVEY BY BOWMAN CONSULTING GROUP, LTD TIED TO NGS AND/OR COUNTY GPS MONUMENTS.
2. THE INFORMATION AND DATA SHOWN OR INDICATED WITH RESPECT TO EXISTING UNDERGROUND FACILITIES AT OR CONTIGUOUS TO THE SITE IS BASED ON INFORMATION AND DATA FURNISHED TO THE OWNER OR ENGINEER BY THE OWNERS OF SUCH UNDERGROUND FACILITIES OR BY OTHERS. THE OWNER AND ENGINEER SHALL NOT BE RESPONSIBLE FOR THE ACCURACY OR COMPLETENESS OF ANY SUCH INFORMATION OR DATA. THE CONTRACTOR SHALL HAVE FULL RESPONSIBILITY FOR REVIEWING AND CHECKING ALL SUCH INFORMATION AND DATA, FOR LOCATING ALL UNDERGROUND FACILITIES SHOWN OR INDICATED, FOR COORDINATION OF THE WORK WITH THE OWNERS OF SUCH UNDERGROUND FACILITIES DURING CONSTRUCTION, FOR THE SAFETY AND PROTECTION THEREOF, AND REPAIRING ANY DAMAGE THERETO RESULTING FROM THE WORK, ALL OF WHICH WILL BE AT NO ADDITIONAL COST TO THE OWNER. CONTRACTOR SHALL CONTACT "MISS UTILITY" OF VIRGINIA AT 1–800–552–7001 PRIOR TO START OF CONSTRUCTION.

GRADING

1. PRIOR TO START OF CONSTRUCTION, CONTRACTOR SHALL VERIFY EXISTING SURFACE ELEVATIONS TO ASSURE PROPER TRANSITIONS BETWEEN EXISTING AND PROPOSED FACILITIES.
2. ALL CUT OR FILL SLOPES SHALL BE 3:1 OR FLATTER UNLESS OTHERWISE NOTED.
3. IF ANY EXISTING STRUCTURES TO REMAIN ARE DAMAGED DURING CONSTRUCTION IT SHALL BE THE CONTRACTORS RESPONSIBILITY TO REPAIR AND/OR REPLACE THE EXISTING STRUCTURE AS NECESSARY TO RETURN IT TO EXISTING CONDITIONS OR BETTER.
4. CONTRACTOR SHALL ASSURE POSITIVE DRAINAGE AWAY FROM BUILDINGS AND ON ALL VEGETATION AND PAVED AREAS.
5. ALL UNSURFACED AREAS DISTURBED BY GRADING OPERATION SHALL RECEIVE 6 INCHES OF TOPSOIL.
6. CONTRACTOR SHALL STABILIZE DISTURBED AREAS IN ACCORDANCE WITH EROSION AND SEDIMENT CONTROL PLAN UNTIL A HEALTHY STAND OF VEGETATION IS OBTAINED.

LAYOUT AND MATERIALS

1. ANY PROPERTY MONUMENTATION DISTURBED DURING CONSTRUCTION SHALL BE SET OR RESET BY A PROFESSIONAL LICENSED SURVEYOR PAID BY THE CONTRACTOR AT NO EXPENSE TO THE OWNER.
2. PRIOR TO START OF CONSTRUCTION, CONTRACTOR SHALL VERIFY EXISTING IMPROVEMENTS TO ASSURE PROPER TRANSITIONS BETWEEN EXISTING AND PROPOSED FACILITIES.
3. SYMBOLS AND LEGENDS OF PROJECT FEATURES ARE GRAPHIC REPRESENTATIONS AND ARE NOT NECESSARILY SCALED TO THEIR ACTUAL DIMENSIONS OR LOCATIONS ON THE DRAWINGS. THE CONTRACTOR SHALL REFER TO THE DETAIL SHEET DIMENSIONS, MANUFACTURER'S LITERATURE, SHOP DRAWINGS AND FIELD MEASUREMENTS OF SUPPLIED PRODUCTS FOR LAYOUT OF THE PROJECT FEATURES.
4. CONTRACTOR SHALL NOT RELY SOLEY ON ELECTRONIC VERSIONS OF PLANS, SPECIFICATIONS AND DATA FILES THAT ARE OBTAINED FROM THE DESIGNERS, BUT SHALL VERIFY LOCATION OF PROJECT FEATURES IN ACCORDANCE WITH THE PAPER COPIES OF THE PLANS AND SPECIFICATIONS THAT ARE SUPPLIED AS PART OF THE CONTRACT DOCUMENTS.

UTILITIES

1. THE CONTRACTOR MUST CALL "MISS UTILITY" (1–800–552–7001) AT LEAST 72 HOURS BEFORE EXCAVATION TO REQUEST FIELD LOCATION OF UTILITIES.
2. THE LOCATIONS, SIZE AND TYPES OF EXISTING UTILITIES ARE SHOWN AS AN APPROXIMATE REPRESENTATION ONLY. THE OWNER OR ITS REPRESENTATIVE(S) HAVE NOT INDEPENDENTLY VERFIED THIS INFORMATION AS SHOWN ON THE PLANS. THE UTILITY INFORMATION SHOWN DOES NOT GUARANTEE THE ACTUAL EXISTENCE, SERVICEABILITY, OR OTHER DATA CONCERNING THE UTILITIES, NOR DOES IT GUARANTEE AGAINST THE POSSIBILITY THAT ADDITIONAL UTILITIES MAY BE PRESENT THAT ARE NOT SHOWN ON THE PLANS. PRIOR TO ORDERING MATERIALS AND BEGINNING CONSTRUCTION, THE CONTRACTOR SHALL VERIFY AND DETERMINE THE EXACT LOCATIONS, SIZES AND ELEVATIONS OF THE POINTS OF CONNECTIONS TO EXISTING UTILITIES AND SHALL CONFIRM THAT THERE ARE NO INTERFERENCES WITH EXISTING UTILITIES AND THE PROPOSED UTILITY ROUTES, INCLUDING ROUTES WITHIN PUBLIC RIGHTS OF WAY.
3. WHERE AN EXISTING UTILITY IS FOUND TO CONFLICT WITH THE PROPOSED WORK, OR EXISTING CONDITIONS DIFFER FROM THOSE SHOWN SUCH THAT THE WORK CANNOT BE COMPLETED AS INTENDED, THE LOCATION, ELEVATION, AND SIZE OF THE UTILITY SHALL BE ACCURATELY DETERMINED WITHOUT DELAY BY THE CONTRACTOR, AND THE INFORMATION FURNISHED IN WRITING TO THE OWNER'S REPRESENTATIVE(S) FOR THE RESOLUTION OF THE CONFLICT. CONTRACTOR'S FAILURE TO NOTIFY PRIOR TO PERFORMING ADDITIONAL WORK RELEASES OWNER FROM OBLIGATIONS FOR ADDITIONAL PAYMENTS WHICH OTHERWISE MAY BE WARRANTED TO RESOLVE THE CONFLICT.
4. CONTRACTOR SHALL NOTIFY AND COORDINATE ALL WORK INVOLVING EXISTING UTILITIES WITH UTILITY OWNER'S, 72 HOURS PRIOR TO START OF CONSTRUCTION.
5. LINES UNDERGROUND SHALL BE INSTALLED, INSPECTED AND APPROVED PRIOR TO BACKFILLING.
6. ALL PIPE FITTINGS HAVE NOT BEEN SHOWN. CONTRACTOR SHALL PROVIDE/INSTALL ALL FITTINGS, FLEX COUPLINGS, JOINT RESTRAINT, THRUST BLOCKING, ETC. NECESSARY FOR COMPLETE INSTALLATION.
7. PROPOSED EQUIPMENT AND PIPING LAYOUT IS BASED ON EQUIPMENT SPECIFIED. CONTRACTOR SHALL VERIFY ALL LAYOUT DIMENSIONS AND SUBMIT SHOP DRAWINGS FOR APPROVAL PRIOR TO INSTALLATION.

PIPE SCHEDULE

CATEGORY	SIZES	MATERIAL[1,2]	PIPE [1]		FITTINGS[1]
			RATING	JOINTS	
SANITARY SEWER PRESSURE PIPING (BURIED)	3" AND UP	DUCTILE IRON	CLASS 52	MECHANICAL JOINT (RESTRAINED)	MECHANICAL JOINT (RESTRAINED)
SANITARY SEWER PRESSURE PIPING (BURIED)	UNDER 3"	HDPE	DR 9.0	ELECTROFUSION WELDED	ELECTROFUSION WELDED
SANITARY SEWER PRESSURE PIPING (EXPOSED OR INSIDE BUILDINGS)	3" AND UP	DUCTILE IRON	CLASS 53	FLANGED	FLANGED
SANITARY SEWER PRESSURE PIPING (EXPOSED OR INSIDE BUILDINGS)	UNDER 3"	304 SS	SCH 40	NPT	NPT
POTABLE WATER PIPING (EXPOSED OR INSIDE BUILDINGS)	UNDER 3"	COPPER	TYPE L	SOLDERED	SOLDERED
POTABLE WATER PIPING (EXPOSED OR INSIDE BUILDINGS)	3" AND UP	DUCTILE IRON	CLASS 53	FLANGED	FLANGED
POTABLE WATER PIPING (BURIED)	UNDER 3"	HDPE	DR 9.0	ELECTROFUSION WELDED	ELECTROFUSION WELDED
POTABLE WATER PIPING (BURIED)	3" AND UP	DUCTILE IRON	CLASS 52	MECHANICAL JOINT (RESTRAINED)	MECHANICAL JOINT (RESTRAINED)
GRAVITY SANITARY SEWER PIPING	ALL	DUCTILE IRON	CLASS 52	BELL AND SPIGOT	BELL AND SPIGOT
BUILDING DRAINAGE PIPING	ALL	DUCTILE IRON	CLASS 52	BELL AND SPIGOT	BELL AND SPIGOT

1. UNLESS INDICATED OTHERWISE ON THE PLANS.
2. ALL PIPING ENCASED IN CONCRETE SHALL BE DUCTILE IRON.

LEGEND

EXISTING VEGETATION AND DRIP LINE
EXISTING TREELINE
EXISTING UNDERGROUND WATER
EXISTING STORM DRAIN
EXISTING SANITARY FORCE MAIN
EXISTING OVERHEAD ELECTRIC/UTILITY
EXISTING OVERHEAD TELEPHONE
EXISTING UNDERGROUND TELEPHONE
EXISTING FIBER OPTIC
EXISTING TELEPHONE LINE
EXISTING EDGE OF PAVEMENT
EXISTING MAJOR CONTOUR
EXISTING MINOR CONTOUR
EXISTING PROPERTY LINE
EXISTING UTILITY EASEMENT
EXISTING TELEPHONE EASEMENT
EXISTING WELL
EXISTING WATER VALVE
EXISTING BUILDING
EXISTING IRON ROD OR PIPE FOUND
EXISTING GUY WIRE
EXISTING POWER POLE
EXISTING COMMUNICATIONS PEDESTAL
BENCHMARK
EXISTING MAILBOX
EXISTING SIGN
SOIL BORING
PROPOSED TREELINE
PROPOSED ELECTRICAL CONDUIT
PROPOSED CHAIN LINK FENCE
PROPOSED ELECTRICAL DUCTBANK
PROPOSED STORM SEWER AND STRUCTURE
PROPOSED PIPING
PROPOSED FIRE HYDRANT
PROPOSED YARD HYDRANT
PROPOSED BOLLARD
PROPOSED LIGHT POLE
PROPOSED FITTING
PROPOSED REDUCER
PROPOSED CLEANOUT
PROPOSED BUTTERFLY VALVE
PROPOSED GATE VALVE
PROPOSED PLUG VALVE
PROPOSED FLOW DIRECTION
PROPOSED GRAVEL
PROPOSED CONCRETE PAVEMENT
PROPOSED ASPHALT PAVEMENT

AGT	ABOVE GROUND TANK	INV.	INVERT
ASS'Y	ASSEMBLY	IPF	IRON PIPE FOUND
B.O.	BLOW OFF	IRS	IRON ROD SET
BOT.	BOTTOM	LF	LINEAR FEET
BV	BUTTERFLY VALVE	LOD	LIMITS OF DISTURBANCE
C/L	CENTERLINE	LT.	LEFT
CL	CLASS	MH	MANHOLE
C.O.	CLEANOUT	MIN.	MINIMUM
CMP	CORRUGATED METAL PIPE	MJ	MECHANICAL JOINT
CNC.	CONCENTRIC	N/F	NOW OR FORMERLY
CONC.	CONCRETE	NIC	NOT IN CONTRACT
C.Y.	CUBIC YARDS	PE	PLAIN END
DI	DUCTILE IRON	R/W	RIGHT–OF–WAY
DR.	DRIVE	REQ'D	REQUIRED
EP	EDGE OF PAVEMENT	RCP	REINFORCED CONCRETE PIPE
EA	EACH	RT.	RIGHT
ECN.	ECCENTRIC	SS	SANITARY SEWER
EL.	ELEVATION	SD	STORM DRAIN
ESMT	EASEMENT	STA.	STATION
EX.	EXISTING	STM	STORM SEWER
FFE	FINISHED FLOOR ELEVATION	STMH	STORM MANHOLE
F	FLANGE JOINT	T	TELEPHONE
FM	SEWER FORCEMAIN	TC	TOP OF CURB
F.O.T.	FLAT ON TOP	TS&V	TAPPING SLEEVE AND VALVE
GV	GATE VALVE	TYP	TYPICAL
HORIZ.	HORIZONTAL	VERT.	VERTICAL

Dewberry

Dewberry Engineers Inc.
4805 Lake Brook Drive, Suite 200
Glen Allen, Virginia 23060
PHONE: 804.290.7957
FAX: 804.290.7928
www.dewberry.com

ZION CROSSROADS
WATER BOOSTER PUMP STATION
AND WASTEWATER PUMP STATION
FLUVANNA COUNTY
DEPARTMENT OF PUBLIC WORKS
FLUVANNA COUNTY, VA

KEY PLAN

SEAL

COMMONWEALTH OF VIRGINIA
DANYLO A. VILLIHAUER
Lic. No. 046419
5/4/2018
PROFESSIONAL ENGINEER

SCALE

No.	DATE	BY	Description

REVISIONS

DRAWN BY	BMM & JEH
APPROVED BY	DAV
CHECKED BY	BJH
DATE	MAY 2018

TITLE

GENERAL NOTES AND LEGEND

PROJECT NO. 50078863

G2.0

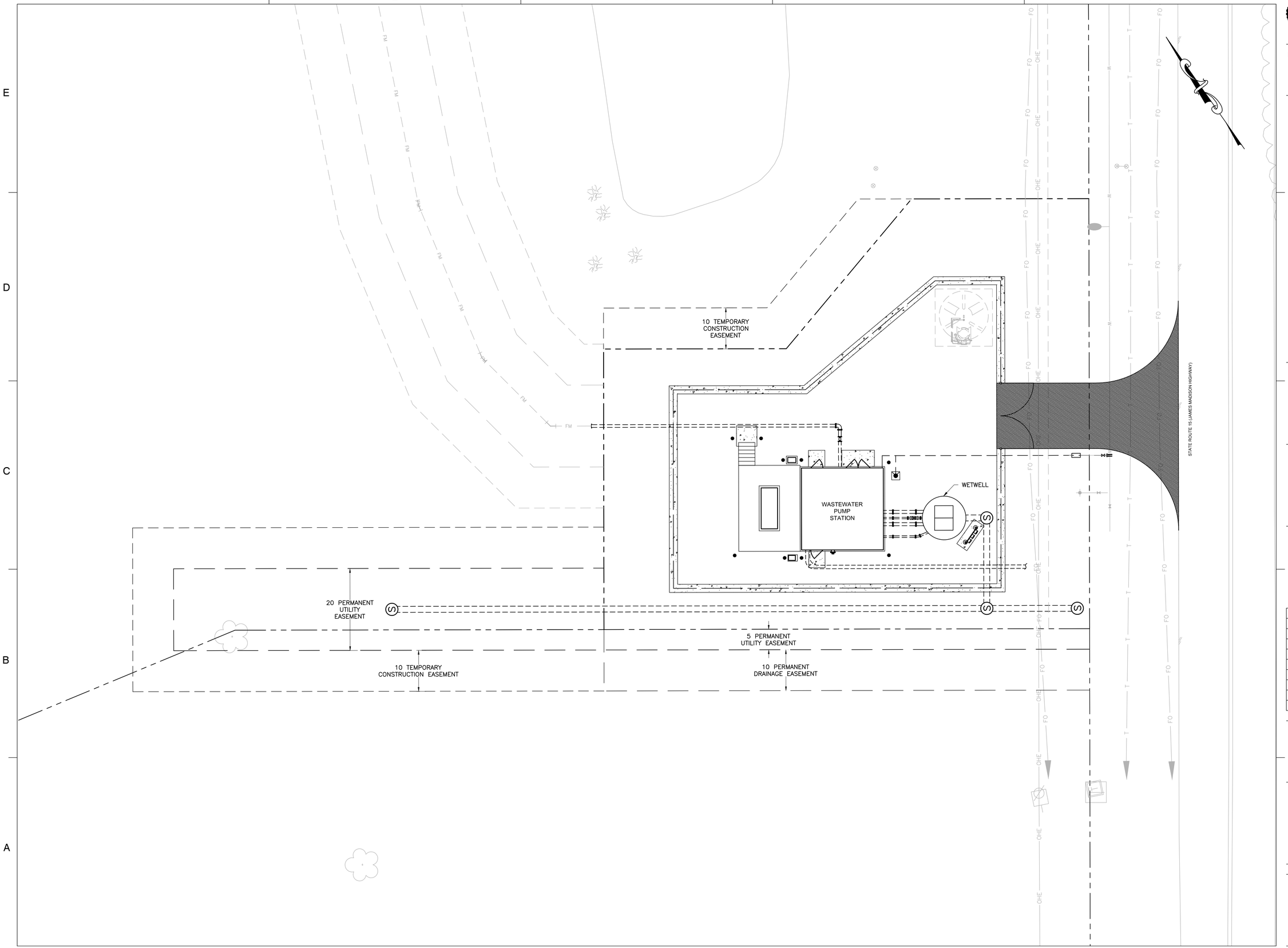

Dewberry

Dewberry Engineers Inc.
4805 Lake Brook Drive, Suite 200
Glen Allen, Virginia 23060
PHONE: 804.290.7957
FAX: 804.290.7928
www.dewberry.com

ZION CROSSROADS WATER BOOSTER PUMP STATION AND WASTEWATER PUMP STATION

FLUVANNA COUNTY
DEPARTMENT OF PUBLIC WORKS

FLUVANNA COUNTY, VA.

KEY PLAN

SEAL

COMMONWEALTH OF VIRGINIA
DANYLO A. VILLIHAUER
Lic. No. 046419
5/4/2018
PROFESSIONAL ENGINEER

SCALE

0' 10' 20'
GRAPHIC SCALE
1" = 10'

No.	DATE	BY	Description

REVISIONS

DRAWN BY	BMM & JEH
APPROVED BY	DAV
CHECKED BY	BJH
DATE	MAY 2018

TITLE

WWPS
SITE
OVERVIEW

PROJECT NO. 50078863

C0.1

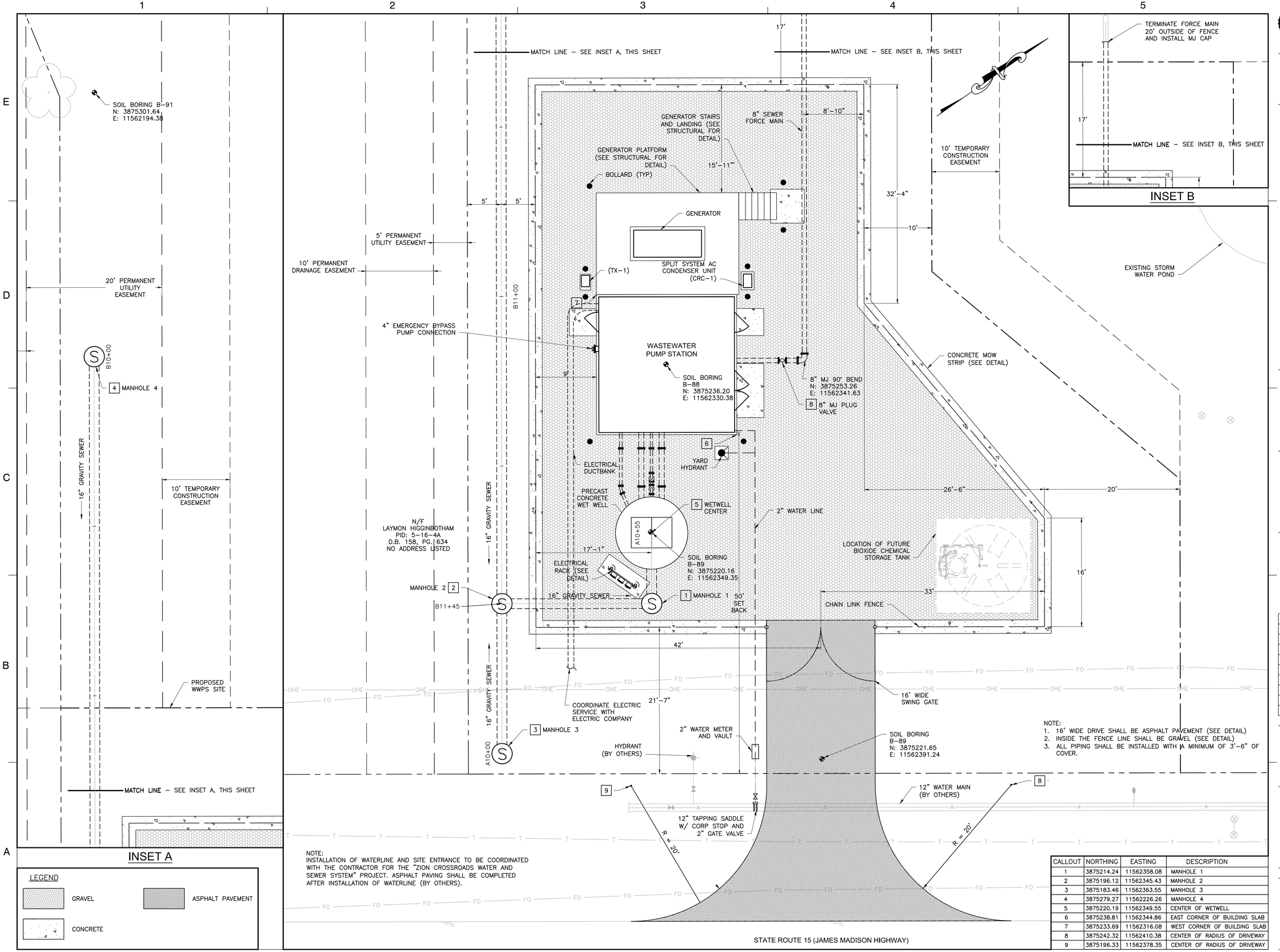

NOTE:
1. 16' WIDE DRIVE SHALL BE ASPHALT PAVEMENT (SEE DETAIL)
2. INSIDE THE FENCE LINE SHALL BE GRAVEL (SEE DETAIL)
3. ALL PIPING SHALL BE INSTALLED WITH A MINIMUM OF 3'-6" OF COVER.

NOTE:
INSTALLATION OF WATERLINE AND SITE ENTRANCE TO BE COORDINATED WITH THE CONTRACTOR FOR THE "ZION CROSSROADS WATER AND SEWER SYSTEM" PROJECT. ASPHALT PAVING SHALL BE COMPLETED AFTER INSTALLATION OF WATERLINE (BY OTHERS).

CALLOUT	NORTHING	EASTING	DESCRIPTION
1	3875214.24	11562358.08	MANHOLE 1
2	3875196.12	11562345.43	MANHOLE 2
3	3875183.46	11562363.55	MANHOLE 3
4	3875279.27	11562226.26	MANHOLE 4
5	3875220.19	11562349.55	CENTER OF WETWELL
6	3875238.81	11562344.86	EAST CORNER OF BUILDING SLAB
7	3875233.69	11562316.08	WEST CORNER OF BUILDING SLAB
8	3875242.32	11562410.38	CENTER OF RADIUS OF DRIVEWAY
9	3875196.33	11562378.35	CENTER OF RADIUS OF DRIVEWAY

Dewberry

Dewberry Engineers Inc.
4805 Lake Brook Drive, Suite 200
Glen Allen, Virginia 23060
PHONE: 804.290.7957
FAX: 804.290.7928
www.dewberry.com

ZION CROSSROADS WATER BOOSTER PUMP STATION AND WASTEWATER PUMP STATION

FLUVANNA COUNTY
DEPARTMENT OF PUBLIC WORKS

FLUVANNA COUNTY, VA.

KEY PLAN

SEAL

COMMONWEALTH OF VIRGINIA
DANYLO A. VILLIHAUER
Lic. No. 046419
5/4/2018
PROFESSIONAL ENGINEER

SCALE

0' 6' 12'
GRAPHIC SCALE
1" = 6'

No.	DATE	BY	Description

REVISIONS

DRAWN BY	BMM & JEH
APPROVED BY	DAV
CHECKED BY	BJH
DATE	MAY 2018

TITLE

WWPS SITE LAYOUT AND PIPING PLAN

PROJECT NO. 50078863

C1.0

BOS 2019-01-09 p.1408/1491

Dewberry

Dewberry Engineers Inc.
4805 Lake Brook Drive, Suite 200
Glen Allen, Virginia 23060
PHONE: 804.290.7957
FAX: 804.290.7928
www.dewberry.com

ZION CROSSROADS WATER BOOSTER PUMP STATION AND WASTEWATER PUMP STATION

FLUVANNA COUNTY
DEPARTMENT OF PUBLIC WORKS

FLUVANNA COUNTY, VA

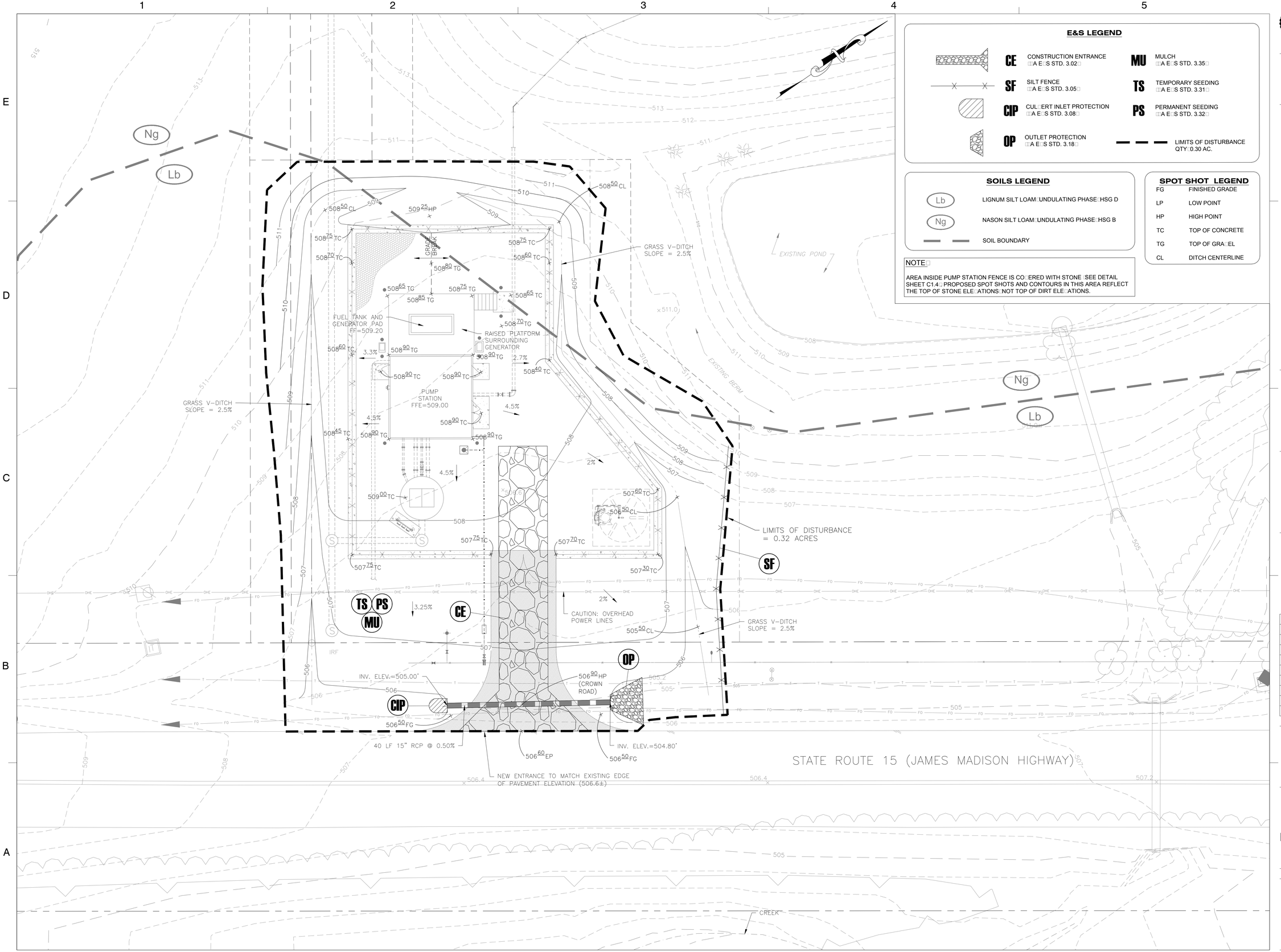

E&S LEGEND

CE	CONSTRUCTION ENTRANCE □A E□S STD. 3.02□	MU	MULCH □A E□S STD. 3.35□
SF	SILT FENCE □A E□S STD. 3.05□	TS	TEMPORARY SEEDING □A E□S STD. 3.31□
CIP	CUL□ERT INLET PROTECTION □A E□S STD. 3.08□	PS	PERMANENT SEEDING □A E□S STD. 3.32□
OP	OUTLET PROTECTION □A E□S STD. 3.18□		LIMITS OF DISTURBANCE QTY□0.30 AC.

SOILS LEGEND

Lb	LIGNUM SILT LOAM□UNDULATING PHASE□HSG D
Ng	NASON SILT LOAM□UNDULATING PHASE□HSG B
	SOIL BOUNDARY

SPOT SHOT LEGEND

FG	FINISHED GRADE
LP	LOW POINT
HP	HIGH POINT
TC	TOP OF CONCRETE
TG	TOP OF GRA□EL
CL	DITCH CENTERLINE

NOTE□

AREA INSIDE PUMP STATION FENCE IS CO□ERED WITH STONE □SEE DETAIL SHEET C1.4□ PROPOSED SPOT SHOTS AND CONTOURS IN THIS AREA REFLECT THE TOP OF STONE ELE□ATIONS□NOT TOP OF DIRT ELE□ATIONS.

KEY PLAN

SEAL

COMMONWEALTH OF VIRGINIA
BRANYLO A. VILLIHAUER
Lic. No. 046419
5/4/2018
PROFESSIONAL ENGINEER

SCALE

0' 10' 20'
GRAPHIC SCALE
1" = 10'

No.	DATE	BY	Description

REVISIONS

DRAWN BY	BMM & JEH
APPROVED BY	DAV
CHECKED BY	BJH
DATE	MAY 2018

TITLE

WWPS
GRADING AND
EROSION & SEDIMENT
CONTROL PLAN

PROJECT NO. 50078863

C1.1

BOS 2019-01-09 p.1409/1491

EROSION & SEDIMENT CONTROL NARRATIVE

PROJECT DESCRIPTION
THIS PROJECT CONSISTS OF THE INSTALLATION OF A WASTEWATER PUMP STATION OFF OF JAMES MADISON HIGHWAY (ROUTE 15), 0.5 MILES SOUTH OF THE HIGHWAY'S INTERSECTION WITH ROUTE 250. THE LIMITS OF DISTURBANCE IS 0.32 ACRES. ACCESS TO THE SITE WILL BE VIA A PROPOSED PAVED ACCESS ENTRANCE OFF OF JAMES MADISON HIGHWAY.

EXISTING SITE CONDITIONS
STORM WATER IS GENERALLY CONVEYED OFF-SITE THROUGH OVERLAND FLOW. NO WETLANDS WILL BE AFFECTED BY THE CONSTRUCTION OF THE PROJECT. THE PROJECT AREA IS NOT LOCATED WITHIN A FLOODPLAIN AS SHOWN ON FEMA FIRM PANEL #51065C0100C, ZONE X DATED 05/16/2008. THE SITE IS GRASSY WITH TALL GRASS/SHRUBS AND SLOPES TO THE EAST AT 2%-20%.

ADJACENT AREAS
STARLITE (COMMERCIAL) PARK IS LOCATED TO THE NORTHWEST, AGRICULTURAL LAND IS LOCATED TO THE SOUTHWEST, JAMES MADISON HIGHWAY IS LOCATED TO THE SOUTHEAST, AND VACANT/AGRICULTURAL LAND CONTAINING A UTILITY STATION AND A SMALL POND IS LOCATED TO THE NORTHEAST. OVERHEAD POWER LINES RUN ALONG THE NORTHWEST SIDE OF JAMES MADISON HIGHWAY.

OFF-SITE AREAS
NO OFF-SITE AREAS ARE ANTICIPATED WITH THIS PROJECT.

SOILS
ACCORDING TO ONLINE WEB BASED SOIL SURVEY BY THE NATURAL RESOURCES CONSERVATION SERVICE, UNITED STATES DEPARTMENT OF AGRICULTURE: THE FOLLOWING SOILS MAY BE FOUND WITHIN THE PROJECT LIMITS:

Lb IS A LIGNUM SILT LOAM, UNDULATING PHASE. THE EROSION HAZARD K FACTOR IS 0.55 AND IS HYDROLOGIC SOIL GROUP (HSG) D.

Ng IS NASON SILT LOAM, UNDULATING PHASE. THE EROSION HAZARD K FACTOR IS 0.43 AND IS HYDROLOGIC SOIL GROUP (HSG) B.

BOTH OF THESE SOILS ARE TYPICALLY FOUND ON SLOPES SLOPING 2 TO 8 PERCENT.

CRITICAL AREAS
CRITICAL AREAS ARE NOT ANTICIPATED WITH THIS PROJECT.

SOIL STOCKPILE AND BORROW AREAS
ALL SOIL STOCKPILES SHALL HAVE SILT FENCE ON ALL SIDES. STOCKPILES SHALL BE TEMPORARY/PERMANENTLY SEEDED DEPENDING ON TIME FRAME FOR REUSE OR REMOVAL OF SOIL MATERIAL. ALL ON-SITE BORROW AREAS (IF NECESSARY) SHALL BE DELINEATED ON PLAN BY CONTRACTOR. APPROPRIATE EROSION AND SEDIMENT CONTROL FEATURES (EX. SILT FENCE, SEDIMENT TRAPS/BASINS) SHALL BE INSTALLED DEPENDING ON LOCATIONS AND FIELD CONDITIONS.

STORMWATER NARRATIVE
FLUVANNA COUNTY IS NOT IN A CHESAPEAKE BAY PRESERVATION AREA, AND THE PROJECT CONSISTS OF LAND DISTURBANCE BETWEEN 10,000 SF AND 1 ACRE. THEREFORE, A STORMWATER MANAGEMENT PLAN IS NOT REQUIRED. HOWEVER, AN EROSION & SEDIMENT CONTROL PLAN IS REQUIRED AND HAS BEEN PREPARED.

MS-19 HAS BEEN MET BY PROVING THE DOWNSTREAM RECEIVING DITCH IS ADEQUATE FOR THE 2-YEAR STORM VELOCITY (NON-EROSIVE) AND 10-YEAR STORM CAPACITY (DEPTH).

EROSION AND SEDIMENT CONTROL MEASURES
THE PLAN HAS BEEN DEVELOPED TO MINIMIZE LAND DISTURBANCE. WHERE GRADING IS NECESSARY, ADEQUATE PRECAUTIONS SHALL BE TAKEN TO MINIMIZE EROSION AND TO CONTAIN SILT THROUGH PROPER EROSION AND SEDIMENT CONTROL PRACTICES. THE INTENT OF THIS EROSION AND SEDIMENT CONTROL PLAN IS TO GUIDE THE CONTRACTOR IN IMPLEMENTING ACCEPTABLE MEASURES, INFRASTRUCTURE, AND MAINTENANCE PROGRAMS THAT WILL MINIMIZE THE AMOUNT OF EROSION AND RESULTING SEDIMENT THAT WILL TAKE PLACE DURING THE CONSTRUCTION OF THIS PROJECT. ALL VEGETATIVE AND STRUCTURAL EROSION AND SEDIMENT CONTROL PRACTICES WILL BE CONSTRUCTED AND MAINTAINED ACCORDING TO THE MINIMUM STANDARDS AND SPECIFICATIONS OF THE VA EROSION & SEDIMENT CONTROL BOOK.

EROSION AND SEDIMENT CONTROL MEASURES

TEMPORARY CONSTRUCTION ENTRANCE (STD. & SPEC. 3.02):
TO REDUCE THE AMOUNT OF SOIL OR MUD BEING TRANSPORTED ONTO PUBLIC ROADS. INSTALL A STONE PAD LOCATED AT POINTS OF INGRESS AND EGRESS, USING VDOT #1 STONE. DIMENSIONS OF CONSTRUCTION ENTRANCE SHALL BE A MINIMUM OF 12 FEET WIDE BY 70 FEET LENGTH. A FILTER FABRIC LINER SHALL BE INSTALLED PRIOR TO THE PLACEMENT OF THE CONSTRUCTION ENTRANCE AGGREGATE AS SPECIFIED IN STATE MINIMUM STANDARD #17.

SILT FENCE (STD. & SPEC. 3.05):
A TEMPORARY SEDIMENT BARRIER TO CONTROL EROSION IN SHEET FLOW AND LOW FLOW CHANNEL SITUATIONS. SILT FENCE CONSISTS OF A SYNTHETIC FILTER FABRIC (USUALLY BLACK) ENTRENCHED 4" INTO THE GROUND, STRETCHED TIGHT AND ATTACHED TO SUPPORT POSTS SPACED 6 FEET APART.

CULVERT INLET PROTECTION (VESCH STD. & SPEC. 3.08):
TO PREVENT SEDIMENT FROM ENTERING, ACCUMULATING IN AND BEING TRANSFERRED BY A CULVERT AND ASSOCIATED DRAINAGE SYSTEM PRIOR TO PERMANENT STABILIZATION OF A DISTURBED PROJECT AREA AND TO PROVIDE EROSION CONTROL AT CULVERT INLETS DURING THE PHASE OF A PROJECT WHERE ELEVATION AND DRAINAGE PATTERNS CHANGE, CAUSING ORIGINAL CONTROL MEASURES TO BE INEFFECTIVE OR IN NEED OF REMOVAL.

OUTLET PROTECTION (VESCH STD. & SPEC. 3.18):
STRUCTURALLY LINED APRONS OR OTHER ENERGY DISSIPATING DEVICES PLACED AT THE OUTLETS OF PIPES OR PAVED CHANNEL SECTIONS. OUTLET PROTECTION PREVENTS SCOUR AT STORMWATER OUTLETS, TO PROTECT THE OUTLET STRUCTURE, AND TO MINIMIZE THE POTENTIAL FOR DOWNSTREAM EROSION BY REDUCING THE VELOCITY AND ENERGY OF CONCENTRATED STORMWATER FLOWS.

TEMPORARY SEEDING (VESCH STD. & SPEC. 3.31):
THE ESTABLISHMENT OF A TEMPORARY VEGETATIVE COVER ON DISTURBED AREAS BY SEEDING WITH APPROPRIATE RAPIDLY GROWING ANNUAL PLANTS. TEMPORARY SEEDING REDUCES EROSION AND SEDIMENTATION BY STABILIZING DISTURBED AREAS THAT WILL NOT BE BROUGHT TO FINAL GRADE FOR A PERIOD OF MORE THAN 14 DAYS. TEMPORARY SEEDING REDUCES DAMAGE FROM SEDIMENT AND RUNOFF TO DOWNSTREAM OR OFF-SITE AREAS, AND TO PROVIDE PROTECTION TO BARE SOILS EXPOSED DURING CONSTRUCTION UNTIL PERMANENT VEGETATION OR OTHER EROSION CONTROL MEASURES CAN BE ESTABLISHED. FOR USE WHERE EXPOSED SOIL SURFACES WILL NOT BE AT FINAL GRADE FOR MORE THAN 14 DAYS. SUCH AREAS INCLUDED DENUDED AREAS, SOIL STOCKPILES, DIKES, DAMS, SIDES OF SEDIMENT BASINS, TEMPORARY ROADBANKS, ETC. (SEE MS#1 AND MS#2). A PERMANENT VEGETATIVE COVER SHALL BE APPLIED TO AREAS THAT WILL BE LEFT DORMANT FOR A PERIOD OF MORE THAN ONE (1) YEAR.

PERMANENT SEEDING (VESCH STD. & SPEC. 3.32):
THE ESTABLISHMENT OF A PERENNIAL VEGETATIVE COVER ON DISTURBED AREAS BY PLANTING SEED. PERMANENT SEEDING REDUCES EROSION AND DECREASES SEDIMENT YIELD FROM DISTURBED AREAS. PERMANENT SEEDING STABILIZES DISTURBED AREAS IN A MANNER THAT IS ECONOMICAL, ADAPTABLE TO SITE CONDITIONS, AND ALLOWS SELECTION OF THE MOST APPROPRIATE PLANT MATERIAL. PERMANENT SEEDING ALSO IMPROVES WILDLIFE HABITAT AND ENHANCES NATURAL BEAUTY. FOR USE IN DISTURBED AREAS WHERE PERMANENT, LONG-LIVED VEGETATIVE COVER IS NEEDED TO STABILIZE THE SOIL. FOR USE WHERE ROUGH-GRADED AREAS WHICH WILL NOT BE BROUGHT TO FINAL GRADE FOR A YEAR OR MORE.

MULCHING (VESCH STD. & SPEC. 3.35):
APPLICATION OF PLANT RESIDUES OR OTHER SUITABLE MATERIALS TO THE SOIL SURFACE. MULCHING PERVENTS EROSION BY PROTECTING THE SOIL SURFACE FROM RAINDROP IMPACT AND REDUCING THE VELOCITY OF OVERLAND FLOW. MULCHING FOSTERS THE GROWTH OF VEGETATION BY INCREASING AVAILABLE MOISTURE AND PROVIDING INSULATION AGAINST EXTREME HEAT AND COLD. FOR USE IN AREAS WHICH HAVE BEEN PERMANENTLY SEEDED. MULCHING SHOULD OCCUR IMMEDIATELY FOLLOWING SEEDING. AREAS THAT CANNOT BE SEEDED BECAUSE OF THE SEASON SHOULD BE MULCHED WITH AN ORGANIC MULCH.

TEMPORARY AND PERMANENT STABILIZATION
DURING CONSTRUCTION APPLY TEMPORARY AND/OR PERMANENT SEEDING AS GRADING OPERATIONS ARE COMPLETED IN AREAS NOT TO RECEIVE PAVEMENT, OR OTHER IMPERVIOUS SURFACES. POST CONSTRUCTION-APPLY TOPSOIL, PERMANENT SEEDING PER SPECIFICATIONS AND SOIL AMENDMENTS (AS NECESSARY) TO ALL DISTURBED SURFACES NOT RECEIVING PAVEMENT OR OTHER IMPERVIOUS SURFACE. TEMPORARY SEEDING SHALL BE APPLIED WITHIN SEVEN DAYS TO DENUDED AREAS THAT MAY NOT BE AT FINAL GRADE, BUT WILL REMAIN DORMANT FOR LONGER THAN 30 DAYS AND LESS THAN ONE YEAR. THIS INCLUDES, BUT IS NOT LIMITED TO, STOCKPILES AND BORROW AREAS. PERMANENT SEEDING SHALL BE APPLIED AND A PERENNIAL VEGETATIVE COVERING SHALL BE ESTABLISHED ON DISTURBED AREAS WITHIN SEVEN DAYS OF BEING BROUGHT TO FINAL GRADE ON AREAS NOT OTHERWISE PROTECTED. SELECTION OF THE SEED MIXTURE SHALL DEPEND ON THE TIME OF YEAR IT IS TO BE APPLIED. MULCHING SHALL BE APPLIED TO ALL PERMANENT SEEDING IMMEDIATELY UPON COMPLETION OF SEED APPLICATION. MULCH LIBERALLY DURING THE MID-SUMMER AND WINTER SEASONS.

SEE VIRGINIA EROSION AND SEDIMENT CONTROL TECHNICAL BULLETIN NO. 4, NUTRIENT MANAGEMENT FOR DEVELOPMENT SITES, FOR UPDATED SEED MIXTURES AND SCHEDULES AS WELL AS UPDATED LIMING, MULCHING, AND FERTILIZING REQUIREMENTS. SEE VIRGINIA EROSION AND SEDIMENT CONTROL HANDBOOK STD. AND SPEC. 3.35 FOR MULCHING SPECIFICATIONS.

EROSION & SEDIMENT CONTROL MAINTENANCE

IN GENERAL, THE PROJECT AREA SHALL BE CHECKED AFTER RAINFALL EVENT OR WEEKLY, WHICH EVER IS MORE FREQUENT TO ENSURE THAT ALL EROSION AND SEDIMENT CONTROL DEVICES ARE IN WORKING ORDER. EROSION CONTROL DEVICES SHALL BE MAINTAINED ACCORDING TO THE FOLLOWING SCHEDULE:

1. CONSTRUCTION ENTRANCE
   MAINTAIN ENTRANCE IN A CONDITION TO PREVENT TRACKING OR FLOW OF MUD ONTO PUBLIC RIGHTS-OF-WAY. ALL MATERIALS SPILLED, DROPPED, WASHED, OR TRACKED FROM VEHICLES ONTO ROADWAYS MUST BE IMMEDIATELY REMOVED.
2. SILT FENCE
   SEDIMENT DEPOSITS SHALL BE REMOVED WHEN DEPOSITS REACH APPROXIMATELY ONE-HALF THE HEIGHT OF THE BARRIER. FABRIC SHALL BE REPLACED IF IT HAS DECOMPOSED OR BECOME INEFFECTIVE.
3. CULVERT INLET PROTECTION
   THE STRUCTURE SHOULD BE INSPECTED AFTER EACH RAIN AND REPAIRS MADE AS NEEDED. SEDIMENT SHALL BE REMOVED AND THE TRAP RESTORED TO ITS ORIGINAL DIMENSIONS WHEN THE SEDIMENT HAS ACCUMULATED TO ONE HALF THE DESIGN DEPTH OF THE TRAP. REMOVED SEDIMENT SHALL BE DEPOSITED IN A SUITABLE AREA AND IN SUCH A MANNER THAT IT WILL NOT ERODE. STRUCTURES SHALL BE REMOVED AND THE AREA STABILIZED WHEN THE REMAINING DRAINAGE AREA HAS BEEN PROPERLY STABILIZED.
4. OUTLET PROTECTION
   INSPECT OUTLET PROTECTION FOR ANY EROSION/SCOUR BELOW PIPE. REMOVE ANY SEDIMENT BUILDUP WITHIN STONE AGGREGATE.
5. MULCH
   INSPECT PERIODICALLY (PARTICULARLY AFTER RAINSTORMS) TO CHECK FOR EROSION. WHERE EROSION IS OBSERVED IN MULCHED AREAS, ADDITIONAL MULCH SHALL BE APPLIED.
6. SEEDING
   WHEN IT IS CLEAR THAT PLANTS HAVE NOT GERMINATED ON AN AREA OR HAVE DIED, THESE AREAS MUST BE RE-SEEDED IMMEDIATELY TO PREVENT EROSION DAMAGE. IT IS IMPORTANT TO DETERMINE THE REASON GERMINATION DID NOT TAKE PLACE AND MAKE ANY CORRECTIVE ACTIONS NECESSARY PRIOR TO RE-SEEDING THE AREA.

THE CONTRACTOR SHALL BE RESPONSIBLE FOR PROVIDING AN EMPLOYEE WHO WILL BE RESPONSIBLE IN CHARGE OF THE EROSION AND SEDIMENT CONTROL PLAN AND REQUIREMENTS FOR THE PROJECT THAT IS CERTIFIED BY THE VIRGINIA DEPARTMENT OF CONSERVATION AND RECREATION AS A RESPONSIBLE LAND DISTURBER (RLD). THE NAME OF THE CONTRACTOR'S RLD AND COPY OF HIS CURRENT CERTIFICATION SHALL BE PROVIDED TO THE OWNER, ENGINEER AND COUNTY INSPECTOR PRIOR TO PERFORMING ANY LAND DISTURBING ACTIVITY.
NO EROSION AND SEDIMENT CONTROL MEASURES SHALL BE REMOVED WITHOUT APPROVAL OF THE ENGINEER OR COUNTY INSPECTOR FOR THE PROJECT.
DISPOSAL OF SEDIMENTS SHALL BE IN AN APPROVED LOCATION.

EROSION & SEDIMENT CONTROL SEQUENCE

GENERAL NOTES:
1. ALL EROSION CONTROL MEASURES SHALL BE INSTALLED AND MAINTAINED IN ACCORDANCE WITH THE LATEST EDITION OF THE VIRGINIA EROSION AND SEDIMENT CONTROL HANDBOOK (VESCH).
2. CONTRACTOR MAY COMPLETE CONSTRUCTION-RELATED ACTIVITIES CONCURRENTLY ONLY IF ALL PRECEDING ESC MEASURES HAVE BEEN COMPLETELY INSTALLED.
3. THE ACTUAL SCHEDULE FOR IMPLEMENTING ESC MEASURES WILL BE DETERMINED BY PROJECT CONSTRUCTION PROGRESS.
4. NO ESC MEASURE(S) SHALL BE REMOVED WITHOUT APPROVAL OF COUNTY ESC INSPECTOR FOR THE PROJECT.
5. ADDITIONAL ESC MEASURES MAY BE REQUIRED DUE TO SITE CONDITIONS AT TIME OF CONSTRUCTION ACTIVITY. CONTRACTOR SHALL PROVIDE ANY ADDITIONAL ESC MEASURES AS NEED TO CONTROL SEDIMENT RUN-OFF AT NO ADDITIONAL COST TO OWNER.
6. CONTRACTOR MAY LOCATE STOCKPILES FOR TOPSOIL, SUITABLE FILL WITHIN LIMITS OF CONSTRUCTION. CONTRACTOR SHALL ENCIRCLE STOCK PILE WITH SILT FENCE, TEMPORARY/PERMANENTLY SEED AND MAINTAIN THE STOCKPILE PER THE VESCH.
7. CONTRACTOR SHALL PERFORM CONSTRUCTION SEQUENCING SUCH THAT EARTH MATERIALS ARE EXPOSED FOR THE LEAST AMOUNT OF TIME BEFORE THEY ARE COVERED, SEEDED OR OTHERWISE STABILIZED TO PREVENT EROSION.

SEQUENCE:
1. COUNTY INSPECTOR MUST BE NOTIFIED ONE WEEK PRIOR TO THE COMMENCEMENT OF LAND DISTURBING ACTIVITIES AND ONE WEEK PRIOR TO THE FINAL INSPECTION.
2. INSTALL CONSTRUCTION ENTRANCE AND SILT FENCE (CLEARING ONLY THOSE AREAS NECESSARY TO INSTALL MEASURES).
3. BEGIN CLEARING AND GRUBBING THE SITE. ONLY AREAS OF THE SITE THAT DRAIN TO PROPERLY INSTALLED ESC MEASURE(S) MAY BE CLEARED AND GRUBBED.
4. ROUGH GRADE WASTEWATER PUMP STATION PAD AREA AS SHOWN ON GRADING PLAN.
5. TEMPORARILY SEED AND MULCH, THROUGHOUT CONSTRUCTION AND WITHIN 7 DAYS, DENUDED AREAS THAT WILL BE INACTIVE FOR 14 DAYS OR MORE.
6. INSTALL CULVERT, CULVERT INLET PROTECTION, AND OUTLET PROTECTION.
7. START INSTALLATION OF WASTEWATER PUMP STATION.
8. COMPLETE FINE GRADING AND INSTALLATION OF PERMANENT STABILIZATION OVER ALL DISTURBED AREAS.
9. PERMANENTLY STABILIZE AREAS TO BE VEGETATED (TOPSOIL, SEED AND MULCH) AS THEY ARE BROUGHT TO FINAL GRADE.
10. ALL EXISTING DENUDED/UNSTABILIZED AREAS WITHIN PROJECT AREA NOT OTHERWISE IMPROVED SHALL BE STABILIZED, PERMANENTLY SEEDED AND MULCHED.

EROSION & SEDIMENT CONTROL NOTES

ES-1: UNLESS OTHERWISE INDICATED, ALL VEGETATIVE AND STRUCTURAL EROSION AND SEDIMENT CONTROL PRACTICES WILL BE CONSTRUCTED AND MAINTAINED ACCORDING TO MINIMUM STANDARDS AND SPECIFICATIONS OF THE VIRGINIA EROSION AND SEDIMENT CONTROL HANDBOOK AND THE VIRGINIA EROSION AND SEDIMENT CONTROL REGULATIONS (4VAC50-30).

ES-2: THE PLAN-APPROVING AUTHORITY MUST BE NOTIFIED ONE WEEK PRIOR TO THE PRE-CONSTRUCTION CONFERENCE, ONE WEEK PRIOR TO THE COMMENCEMENT OF LAND DISTURBING ACTIVITY, AND ONE WEEK PRIOR TO THE FINAL INSPECTION. THE NAME OF THE RESPONSIBLE LAND DISTURBER MUST BE PROVIDED TO THE PLAN-APPROVING AUTHORITY PRIOR TO ACTUAL ENGAGEMENT IN THE LAND-DISTURBING ACTIVITY SHOWN ON THE APPROVED PLAN. IF THE NAME IS NOT PROVIDED PRIOR TO ENGAGING IN THE LAND-DISTURBING ACTIVITY, THE PLAN'S APPROVAL WILL BE REVOKED.

ES-3: ALL EROSION AND SEDIMENT CONTROL MEASURES ARE TO BE PLACED PRIOR TO OR AS THE FIRST STEP IN CLEARING.

ES-4: A COPY OF THE APPROVED EROSION AND SEDIMENT CONTROL PLAN SHALL BE MAINTAINED ON THE SITE AT ALL TIMES.

ES-5: PRIOR TO COMMENCING LAND DISTURBING ACTIVITIES IN AREAS OTHER THAN INDICATED ON THESE PLANS (INCLUDING, BUT NOT LIMITED TO, OFF-SITE BORROW OR WASTE AREAS), THE CONTRACTOR SHALL SUBMIT A SUPPLEMENTARY EROSION CONTROL PLAN TO THE OWNER FOR REVIEW AND APPROVAL BY THE PLAN-APPROVING AUTHORITY.

ES-6: THE CONTRACTOR IS RESPONSIBLE FOR INSTALLATION OF ANY ADDITIONAL EROSION CONTROL MEASURES NECESSARY TO PREVENT EROSION AND SEDIMENTATION AS DETERMINED BY THE PLAN-APPROVING AUTHORITY.

ES- 7: ALL DISTURBED AREAS ARE TO DRAIN TO APPROVED SEDIMENT CONTROL MEASURES AT ALL TIMES DURING LAND DISTURBING ACTIVITIES AND DURING SITE DEVELOPMENT UNTIL FINAL STABILIZATION IS ACHIEVED, AFTER WHICH, UPON APPROVAL OF THE PLAN-APPROVING AUTHORITY, THE CONTROLS SHALL BE REMOVED. TRAPPED SEDIMENT AND THE DISTURBED SOIL AREAS RESULTING FROM THE REMOVAL OF TEMPORARY MEASURES SHALL BE PERMANENTLY STABILIZED TO PREVENT FURTHER EROSION AND SEDIMENTATION.

ES-8: DURING DEWATERING OPERATIONS, WATER SHALL BE PUMPED INTO AN APPROVED FILTERING DEVICE.

ES-9: THE CONTRACTOR SHALL INSPECT ALL EROSION CONTROL MEASURES AT LEAST EVERY 2 WEEKS AND IMMEDIATELY AFTER EACH RUNOFF-PRODUCING RAINFALL EVENT. ANY NECESSARY REPAIRS OR CLEANUP TO MAINTAIN THE EFFECTIVENESS OF THE EROSION CONTROL DEVICES SHALL BE MADE IMMEDIATELY.

ES-10: THE CONTRACTOR IS RESPONSIBLE FOR THE DAILY REMOVAL OF SEDIMENT THAT HAS BEEN TRANSPORTED ONTO A PAVED OR PUBLIC ROAD SURFACE.

ES-11: SEEDING OPERATIONS SHALL BE INITIATED WITHIN 7 DAYS AFTER REACHING FINAL GRADE OR UPON SUSPENSION OF GRADING OPERATIONS FOR ANTICIPATED DURATION OF GREATER THAN 30 DAYS OR UPON COMPLETION OF GRADING OPERATIONS FOR A SPECIFIC AREA.

ES-12: THE CONTRACTOR SHALL BE RESPONSIBLE FOR PREVENTING SURFACE AND AIR MOVEMENT OF DUST FROM EXPOSED SOILS WHICH MAY PRESENT HEALTH HAZARDS, TRAFFIC SAFETY PROBLEMS, OR HARM ANIMAL OR PLANT LIFE.

ES-13: A VIRGINIA STORMWATER MANAGEMENT PROGRAM PERMIT (VSMPP) FOR THE DISCHARGE OF STORMWATER FROM CONSTRUCTION ACTIVITIES IS REQUIRED FOR PROJECTS DISTURBING 1 ACRE OR GREATER. A VSMPP IS ALSO REQUIRED FOR PROJECTS DISTURBING 2,500 SQUARE FEET OR GREATER IN A DESIGNATED CHESAPEAKE BAY PRESERVATION AREA. VISIT THE VIRGINIA STORMWATER MANAGEMENT PROGRAM PERMITTING WEB PAGE AT HTTP://WWW.DEQ.VIRGINIA.GOV/PROGRAMS/WATER/STORMWATERMANAGEMENT/VSMPPERMITS.ASPX FOR MORE INFORMATION.

MINIMUM STANDARDS

MS-1. PERMANENT OR TEMPORARY SOIL STABILIZATION SHALL BE APPLIED TO DENUDED AREAS WITHIN SEVEN DAYS AFTER FINAL GRADE IS REACHED ON ANY PORTION OF THE SITE. TEMPORARY SOIL STABILIZATION SHALL BE APPLIED WITHIN SEVEN DAYS TO DENUDED AREAS THAT MAY NOT BE AT FINAL GRADE BUT WILL REMAIN DORMANT (UNDISTURBED) FOR LONGER THAN 30 DAYS. PERMANENT STABILIZATION SHALL BE APPLIED TO AREAS THAT ARE TO BE LEFT DORMANT FOR MORE THAN ONE YEAR.

MS-2. DURING CONSTRUCTION OF THE PROJECT, SOIL STOCK PILES SHALL BE STABILIZED OR PROTECTED WITH SEDIMENT TRAPPING MEASURES. THE CONTRACTOR IS RESPONSIBLE FOR THE TEMPORARY PROTECTION AND PERMANENT STABILIZATION OF ALL SOIL STOCKPILES ON SITE AS WELL AS SOIL INTENTIONALLY TRANSPORTED FROM THE PROJECT SITE.

MS-3. A PERMANENT VEGETATIVE COVER SHALL BE ESTABLISHED ON DENUDED AREAS NOT OTHERWISE PERMANENTLY STABILIZED. PERMANENT VEGETATION SHALL NOT BE CONSIDERED ESTABLISHED UNTIL A GROUND COVER IS ACHIEVED THAT, IN THE OPINION OF DCR/DSWC, IS UNIFORM, MATURE ENOUGH TO SURVIVE AND WILL INHIBIT EROSION.

MS-4. SEDIMENT BASINS AND TRAPS, PERIMETER DIKES, SEDIMENT BARRIERS AND OTHER MEASURES INTENDED TO TRAP SEDIMENT SHALL BE CONSTRUCTED AS A FIRST STEP IN ANY LAND-DISTURBING ACTIVITY AND SHALL BE MADE FUNCTIONAL BEFORE UPSLOPE LAND DISTURBANCE TAKES PLACE.

MS-5. STABILIZATION MEASURES SHALL BE APPLIED TO EARTHEN STRUCTURES SUCH AS DAMS, DIKES AND DIVERSIONS IMMEDIATELY AFTER INSTALLATION.

MS-6. SURFACE RUNOFF FROM DISTURBED AREAS THAT IS COMPRISED OF FLOW FROM DRAINAGE AREAS GREATER THAN OR EQUAL TO THREE ACRES SHALL BE CONTROLLED BY A SEDIMENT BASIN. THE SEDIMENT BASIN SHALL BE DESIGNED AND CONSTRUCTED TO ACCOMMODATE THE ANTICIPATED SEDIMENT LOADING FROM THE LAND-DISTURBING ACTIVITY. THE OUTFALL DEVICE OR SYSTEM DESIGN SHALL TAKE INTO ACCOUNT THE TOTAL DRAINAGE AREA FLOWING THROUGH THE DISTURBED AREA TO BE SERVED BY THE BASIN.

MS-7. CUT AND FILL SLOPES SHALL BE DESIGNED AND CONSTRUCTED IN A MANNER THAT WILL MINIMIZE EROSION. SLOPES THAT ARE FOUND TO BE ERODING EXCESSIVELY WITHIN ONE YEAR OF PERMANENT STABILIZATION SHALL BE PROVIDED WITH ADDITIONAL SLOPE STABILIZING MEASURES UNTIL THE PROBLEM IS CORRECTED.

MS-8. CONCENTRATED RUNOFF SHALL NOT FLOW DOWN CUT OR FILL SLOPES UNLESS CONTAINED WITHIN AN ADEQUATE TEMPORARY OR PERMANENT CHANNEL, FLUME OR SLOPE DRAIN STRUCTURE.

MS-9. WHENEVER WATER SEEPS FROM A SLOPE FACE, ADEQUATE DRAINAGE OR OTHER PROTECTION SHALL BE PROVIDED.

MS-10. ALL STORM SEWER INLETS THAT ARE MADE OPERABLE DURING CONSTRUCTION SHALL BE PROTECTED SO THAT SEDIMENT-LADEN WATER CANNOT ENTER THE CONVEYANCE SYSTEM WITHOUT FIRST BEING FILTERED OR OTHERWISE TREATED TO REMOVE SEDIMENT.

MS-11. BEFORE NEWLY CONSTRUCTED STORMWATER CONVEYANCE CHANNELS ARE MADE OPERATIONAL, ADEQUATE OUTLET PROTECTION AND ANY REQUIRED TEMPORARY OR PERMANENT CHANNEL LINING SHALL BE INSTALLED IN BOTH THE CONVEYANCE CHANNEL AND RECEIVING CHANNEL.

MS-12. WHEN WORK IN A LIVE WATERCOURSE IS PERFORMED, PRECAUTIONS SHALL BE TAKEN TO MINIMIZE ENCROACHMENT, CONTROL SEDIMENT TRANSPORT AND STABILIZE THE WORK AREA TO THE GREATEST EXTENT POSSIBLE DURING CONSTRUCTION. NONERODIBLE MATERIAL SHALL BE USED FOR THE CONSTRUCTION OF CAUSEWAYS AND COFFERDAMS. EARTHEN FILL MAY BE USED FOR THESE STRUCTURES IF ARMORED BY NONERODIBLE COVER MATERIALS.

MS-13. WHEN A LIVE WATERCOURSE MUST BE CROSSED BY CONSTRUCTION VEHICLE MORE THAN TWICE IN ANY SIX MONTH PERIOD, A TEMPORARY STREAM CROSSING CONSTRUCTED OF NONERODIBLE MATERIAL SHALL BE PROVIDED.

MS-14. ALL APPLICABLE FEDERAL, STATE AND LOCAL REGULATIONS PERTAINING TO WORKING IN OR CROSSING LIVE WATERCOURSES SHALL BE MET.

MS-15. THE BED AND BANKS OF A WATERCOURSE SHALL BE STABILIZED IMMEDIATELY AFTER WORK IN THE WATER COURSE IS COMPLETED.

MS-16. NO MORE THAN 500 LINEAR FEET OF TRENCH MAY BE OPENED AT ONE TIME. ALL TRENCHES ARE TO BE BACKFILLED EACH DAY, SEEDED AND MULCHED IMMEDIATELY. IN THE EVENT THAT TRENCHES CANNOT BE BACKFILLED IMMEDIATELY, EROSION CONTROL MEASURES WILL BE INSTALLED.

MS-17. WHERE CONSTRUCTION VEHICLE ACCESS ROUTES INTERSECT PAVED PUBLIC ROADS, PROVISIONS SHALL BE MADE TO MINIMIZE THE TRANSPORT OF SEDIMENT BY VEHICULAR TRACKING ONTO THE PAVED SURFACE. WHERE SEDIMENT IS TRANSPORTED ONTO A PUBLIC ROAD SURFACE, THE ROAD SHALL BE CLEANED THOROUGHLY AT THE END OF EACH DAY. SEDIMENT SHALL BE REMOVED FROM THE ROADS BY SHOVELING OR SWEEPING AND TRANSPORTED TO A SEDIMENT CONTROL DISPOSAL AREA. STREET WASHING SHALL BE ALLOWED ONLY AFTER SEDIMENT IS REMOVED IN THIS MANNER.

MS-18. ALL TEMPORARY EROSION CONTROL MEASURES SHALL BE REMOVED WITHIN 30 DAYS AFTER FINAL SITE STABILIZATION IS ACHIEVED, AS DETERMINED BY THE DEPARTMENT OF CONSERVATION AND RECREATION, DIVISION OF SOIL AND WATER CONSERVATION. TRAPPED SEDIMENT AND THE DISTURBED SOIL AREAS RESULTING FROM THE DISPOSITION OF TEMPORARY MEASURES SHALL BE PERMANENTLY STABILIZED TO PREVENT FURTHER EROSION AND SEDIMENTATION.

MS-19. PROPERTIES AND WATERWAYS DOWNSTREAM FROM DEVELOPMENT SITES SHALL BE PROTECTED FROM SEDIMENT DEPOSITION, EROSION AND DAMAGE DUE TO INCREASES IN VOLUME, VELOCITY AND PEAK FLOW RATE OF STORMWATER RUNOFF. (SEE VIRGINIA REGULATIONS 4VAC50-30 EROSION AND SEDIMENT CONTROL REGULATIONS.)

LIMITS OF DISTURBANCE = 0.32 ACRES

Dewberry

Dewberry Engineers Inc.
4805 Lake Brook Drive, Suite 200
Glen Allen, Virginia 23060
PHONE: 804.290.7957
FAX: 804.290.7928
www.dewberry.com

ZION CROSSROADS
WATER BOOSTER PUMP STATION
AND WASTEWATER PUMP STATION

FLUVANNA COUNTY
DEPARTMENT OF PUBLIC WORKS

FLUVANNA COUNTY, VA

KEY PLAN

SEAL

COMMONWEALTH OF VIRGINIA
JOANYLO A. VILLIHAUER
Lic. No. 046419
5/4/2018
PROFESSIONAL ENGINEER

SCALE

No.	DATE	BY	Description

REVISIONS

DRAWN BY	BMM & JEH
APPROVED BY	DAV
CHECKED BY	BJH
DATE	MAY 2018

TITLE
WWPS
EROSION & SEDIMENT
CONTROL
NOTES AND DETAILS

PROJECT NO. 50078863

C1.2

BOS 2019-01-09 p.1410/1491

Dewberry

Dewberry Engineers Inc.
4805 Lake Brook Drive, Suite 200
Glen Allen, Virginia 23060
PHONE: 804.290.7957
FAX: 804.290.7928
www.dewberry.com

ZION CROSSROADS
WATER BOOSTER PUMP STATION
AND WASTEWATER PUMP STATION
FLUVANNA COUNTY
DEPARTMENT OF PUBLIC WORKS
FLUVANNA COUNTY, VA.

KEY PLAN

SEAL

COMMONWEALTH OF VIRGINIA
DANYLO A. VILLIHAUER
Lic. No. 046419
5/4/2018
PROFESSIONAL ENGINEER

SCALE

No.	DATE	BY	Description

REVISIONS

DRAWN BY	BMM & JEH
APPROVED BY	DAV
CHECKED BY	BJH
DATE	MAY 2018

TITLE

WWPS
EROSION & SEDIMENT
CONTROL
NOTES AND DETAILS

PROJECT NO. 50078863

C1.3

OUTLET PROTECTION SUMMARY TABLE

OUTFALL #	LENGTH (FT.)	WIDTH (FT.)	DEPTH (FT.)	RIPRAP CLASS	D_{50} DIA. (FT.)	NOTES
15" CULVERT	8	11.75	2.5	I	1.1	

Source: USDA-SCS

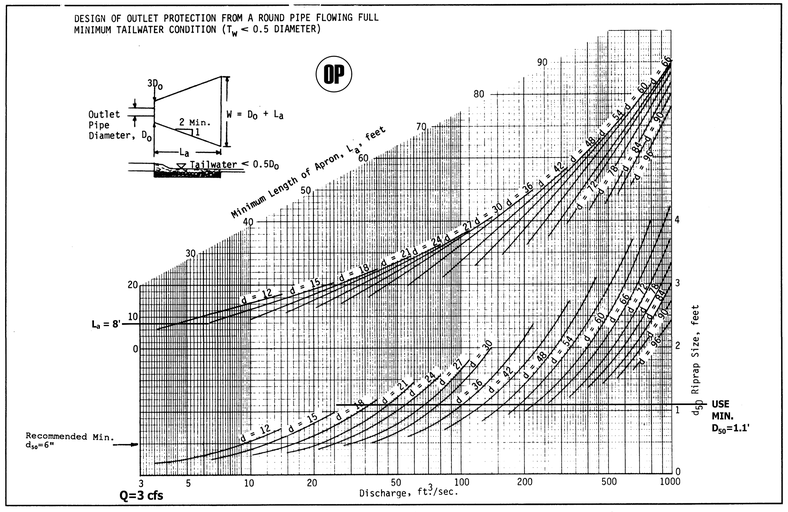

Plate 3.18-3

1992 3.18

TABLE 3.35-A
ORGANIC MULCH MATERIALS AND APPLICATION RATES

MULCHES:	RATES: PER ACRE	RATES: PER 1000 SQ. FT.	NOTES:
STRAW OR HAY	1½ – 2 TONS (MINIMUM 2 TONS FOR WINTER COVER)	70–90 LBS.	FREE FROM WEEDS AND COARSE MATTER. MUST BE ANCHORED. SPREAD WITH MULCH BLOWER OR BY HAND.
FIBER MULCH	MINIMUM 1500 LBS.	35 LBS.	DO NOT USE AS MULCH FOR WINTER COVER OR DURING HOT, DRY PERIODS.* APPLY AS SLURRY.
CORN STALKS	4 – 6 TONS	185–275 LBS.	CUT OR SHREDDED IN 4–6" LENGTHS. AIR–DRIED. DO NOT USE IN FINE TURF AREAS. APPLY WITH MULCH BLOWER OF BY HAND.
WOOD CHIPS	4 – 6 TONS	185–275 LBS.	FREE OF COARSE MATTER. AIR–DRIED. TREAT WITH 12 LBS NITROGEN PER TON. DO NOT USE IN FINE TURF AREAS. APPLY WITH MULCH BLOWER, CHIP HANDLER, OR BY HAND.
BARK CHIPS OR SHREDDED BARK	50 – 70 CU. YDS.	1–2 CU. YDS.	FREE COARSE MATTER. AIR–DRIED. DO NOT USE IN FINE TURF AREAS. APPLY WITH MULCH BLOWER, CHIP HANDLER, OR BY HAND.

* WHEN FIBER MULCH IS THE ONLY AVAILABLE MULCH DURING PERIODS WHEN STRAW SHOULD BE USED, APPLY AT A MINIMUM RATE OF 2000 LBS./AC. OR 45 LBS./1000 SQ. FT.

MU MULCHING

SILT FENCE CULVERT INLET PROTECTION

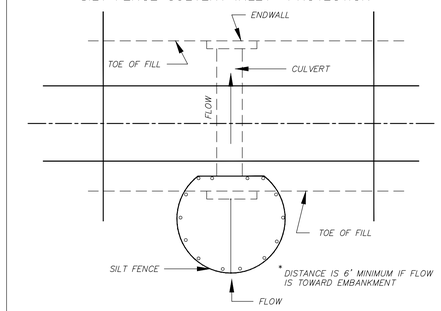

*OPTIONAL STONE COMBINATION

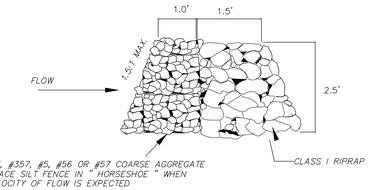

* VDOT #3, #357, #5, #56 OR #57 COARSE AGGREGATE TO REPLACE SILT FENCE IN " HORSESHOE " WHEN HIGH VELOCITY OF FLOW IS EXPECTED

CIP CULVERT INLET PROTECTION
NOT TO SCALE

TABLE 3.31-B
ACCEPTABLE TEMPORARY SEEDING PLANT MATERIALS
"QUICK REFERENCE FOR ALL REGIONS"

PLANTING DATES	SPECIES	RATE (LBS./ACRE)
SEPT. 1 – FEB 15	50/50 MIX OF ANNUAL RYEGRASS (LOLIUM MULTI–FLORUM) & CEREAL (WINTER) RYE (SECALE CEREALE)	50–100
FEB. 16 – APR. 30	ANNUAL RYEGRASS (LOLIUM MULTI–FLORUM)	60–100
MAY 1 – AUG 31	GERMAN MILLET (SETARIA ITALICA)	50

FERTILIZER & LIME
• APPLY 10–20–10 FERTILIZER AT A RATE OF 600 lbs./acre (OR 14 lbs./1,000 sq. ft.) • LIME AND FERTILIZER SHALL BE INCORPORATED INTO THE TOP 2 TO 4 INCHES OF THE SOIL IF POSSIBLE.

TS TEMPORARY SEEDING SPECIFICATIONS FOR ALL REGIONS
TABLE 3.31–B
(REVISED JUNE 2003)

SEED[1]		
LAND USE	SPECIES	APPLICATION PER ACRE
MINIMUM CARE LAWN (COMMERCIAL OR RESIDENTIAL)	TALL FESCUE[1] PERENNIAL RYEGRASS[1] KENTUCKY BLUEGRASS[1]	95–100% 0–5% 0–5% TOTAL: 175–200 LBS.
HIGH–MAINTENANCE LAWN	TALL FESCUE[1]	TOTAL: 200–250 LBS.
GENERAL SLOPE (3:1 OR LESS)	TALL FESCUE RED TOP GRASS OR CREEPING RED FESCUE[2] SEASONAL NURSE CROP	128 LBS. 2 LBS. 20 LBS. TOTAL: 150 LBS.
LOW MAINTENANCE SLOPE (STEEPER THAN 3:1)	TALL FESCUE RED TOP GRASS OR CREEPING RED FESCUE[2] SEASONAL NURSE CROP CROWNVETCH[3]	128 LBS. 2 LBS. 20 LBS. TOTAL: 150 LBS.

1–WHEN SELECTING VARIETIES OF TURFGRASS, USE THE VIRGINIA CROP IMPROVEMENT ASSOCIATION (VCIA) RECOMMENDED TURFGRASS VARIETY LIST. QUALITY SEED WILL BEAR A LABEL INDICATING THAT THEY ARE APPROVED BY VCIA. A CURRENT TURFGRASS VARIETY LIST IS AVAILABLE AT THE LOCAL COUNTY EXTENSION OFFICE OR THROUGH VCIA AT 804.746.4884 OR AT http://sudan.cses.vt.edu/html/Turf/turf/publications/publications2.html

2–USE SEASONAL NURSE CROP IN ACCORDANCE WITH SEEDING DATES AS STATED BELOW:

FEBRUARY 16 – APRIL 30.....	ANNUAL RYE
MAY 1 – AUGUST 15.....	FOXTAIL MILLET
AUGUST 16 – OCTOBER 31.....	ANNUAL RYE
NOVEMBER 1 – FEBRUARY 15.....	WINTER RYE

3–SUBSTITUTE SERICEA LESPEDEZA FOR CROWNVETCH EAST OF FARMVILLE, VA (MAY THROUGH SEPTEMBER USE HULLED SEED, ALL OTHER PERIODS, USE UNHULLED SERICEA). IF FLATPEA IS USED, INCREASE RATE TO 30 LBS/ACRE. IF WEEPING LOVEGRASS IS USED, INCLUDE IN ANY SLOPE OR LOW MAINTENANCE MIXTURE DURING WARMER SEEDING PERIODS, INCREASE TO 30–40.

FERTILIZER & LIME
• APPLY 10–20–10 FERTILIZER AT A RATE OF 1000 lbs./acre (OR 23 lbs./1,000 sq. ft.) • LIME AND FERTILIZER SHALL BE INCORPORATED INTO THE TOP 4 TO 6 INCHES OF THE SOIL BY DISCING OR OTHER MEANS WHENEVER POSSIBLE. NOTE: 1.)A SOIL TEST IS NECESSARY TO DETERMINE THE ACTUAL AMOUNT OF LIME REQUIRED TO ADJUST THE SOIL pH OF SITE. 2.)WHEN APPLYING SLOWLY AVAILABLE NITROGEN USE RATES AVAILABLE IN EROSION & SEDIMENT CONTROL TECHNICAL BULLETIN #4, 2003 NUTRIENT MANAGEMENT FOR DEVELOPMENT SITES AT: http://ww.dcr.state.va.us/sw/e&s.htm#pubs

PS PERMANENT SEEDING SPECIFICATIONS FOR PIEDMONT AREA

1992 3.18

PIPE OUTLET CONDITIONS

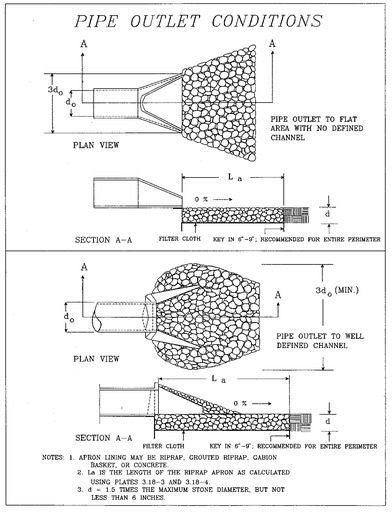

NOTES: 1. APRON LINING MAY BE RIPRAP, GROUTED RIPRAP, GABION BASKET, OR CONCRETE.
2. L_a IS THE LENGTH OF THE RIPRAP APRON AS CALCULATED USING PLATES 3.18–3 AND 3.18–4.
3. d = 1.5 TIMES THE MAXIMUM STONE DIAMETER, BUT NOT LESS THAN 6 INCHES.

Source: Va. DSWC Plate 3.18-1

III - 157

OP OUTLET PROTECTION
NOT TO SCALE

CONSTRUCTION OF A SILT FENCE
(WITHOUT WIRE SUPPORT)

1. SET THE STAKES.

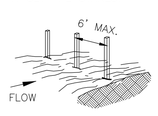

2. EXCAVATE A 4"x 4" TRENCH UPSLOPE ALONG THE LINE OF STAKES.

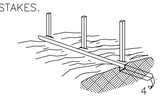

3. STAPLE FILTER MATERIAL TO STAKES AND EXTEND IT INTO THE TRENCH.

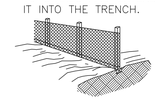

4. BACKFILL AND COMPACT THE EXCAVATED SOIL

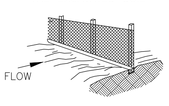

SHEET FLOW INSTALLATION
(PERSPECTIVE VIEW)

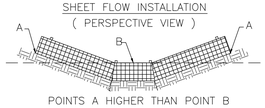

POINTS A HIGHER THAN POINT B PLACEMENT IN DRAINAGE WAY
(FRONT ELEVATION)

SF SILT FENCE
NOT TO SCALE

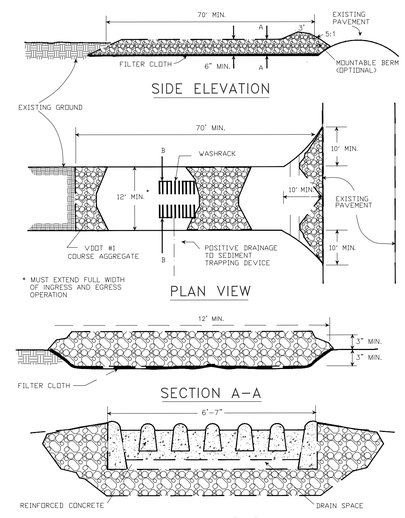

SOURCE: ADAPTED from 1983 Maryland Standards for Soil erosion and Sediment Control, and Va. DSWC Plate 3.02-1

CE STONE CONSTRUCTION ENTRANCE

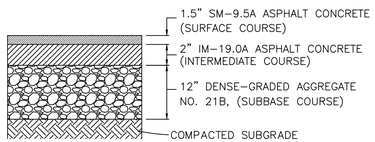

ASPHALT PAVEMENT SECTION

N.T.S. Source: Dewberry

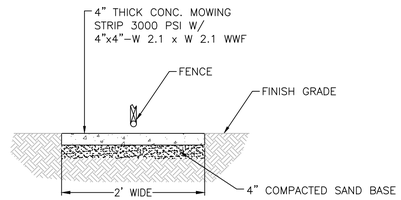

NOTES:
1. PROVIDE CONTROL JOINTS AND EXPANSION JOINTS EVERY 4'.
2. 2' WIDE STRIP TO BE USED WHERE SHOWN ON THE PLANS.

CONCRETE MOW STRIP

N.T.S. Source: Dewberry

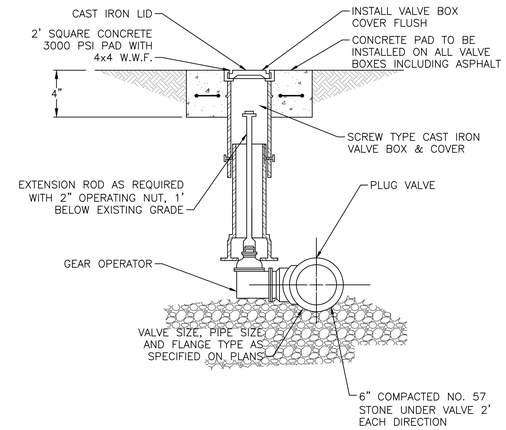

PLUG VALVE DIRECT BURY

N.T.S. Source: Dewberry

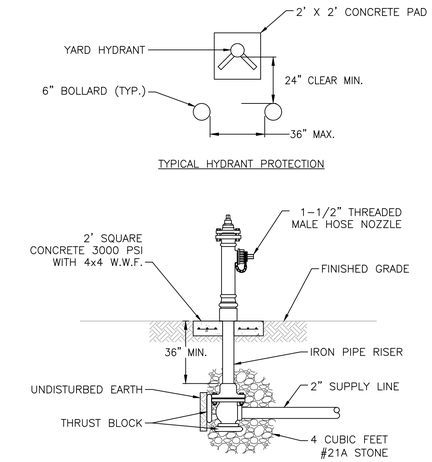

YARD HYDRANT

N.T.S. Source: Dewberry

N□□□□:
1. A□□ □□□□□□ □□□□□ □□□□□ □□□□ □rr□□□r□□□r□□ □□□□ □□ASTM S□□□□□□□□□ C-476.
2. C□□□r□□ □□□□□□□4,000 □□□ □□□ □□ □□□□r□□□□□□□□.
3. A□r□□□r□□□ □□□□□□□□□□ □□□□□□ □□rr□□□r□□□□ □□□□ □ASTM S□□□□□□□□□□ A-615.
4. T□□□r□d □□□□□□□O-R□□ □□□□□□□□□□□□ □□□□□ □□rr□□□□□□□□ □□□□ □□ASTM S□□□□□□□□□□C-361 □ C-443.
5. A□□r□□□d □□□□□□□□□□□□

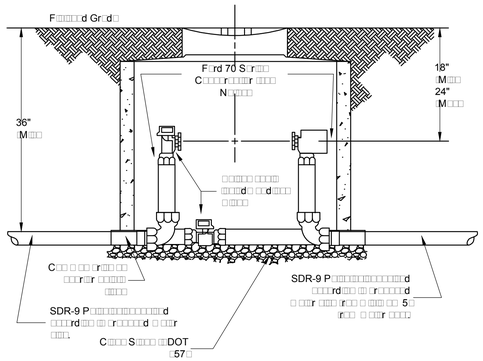

N□□□□

1□ F□rd 70 S□r□□C□□□r□□□r □□r □□□r□□d □□□□□□□□□□□□□□d□ □□□□d □□□□□□□□□ □□d □□
□□□□d □□□□□□□□□
1-1□2" □□BHH76-15B-44-66W-G
2" □□BHH76-15B-44-77W-G

2□ Pr□□r□□ □□d □ □□r□□□□d□□ □□□□□r□□d □□ □□d □□r□□□□□□□□□□□□□

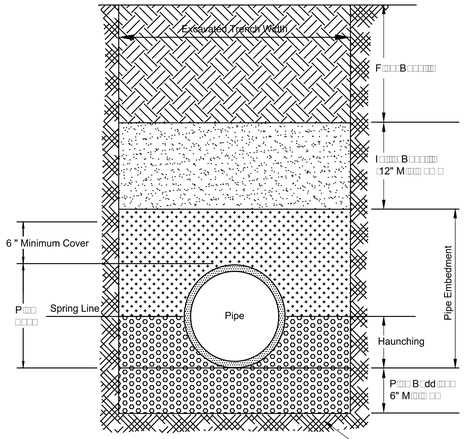

N
1 P dd d d r 3:4
2 P d d r 3:4 r r
r 1 r d
3 I r r
3 r d
4 F d
r 8 r d
5 T 6" d r d r I B
6 DIP dd r ANSI/AWWA C600/C604.

GN-01

F C r
C r D

P E d d B
r D Ir P

N S

R d: 03/20/2014

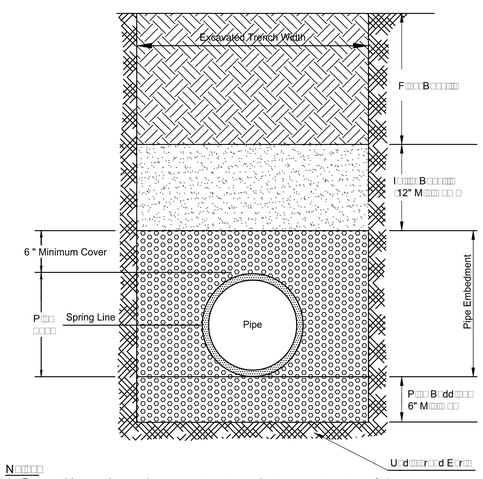

N
1 P d dd d d r d r 3:4 .
2 I r r
3 r d
3 r r 8 r d .
4 T 6" d r d r I B
5 I dd r ANSI/AWWA C605-94.

GN-02

F C r
C r D

P E d d B
r P P

N S

R d: 03/20/2014

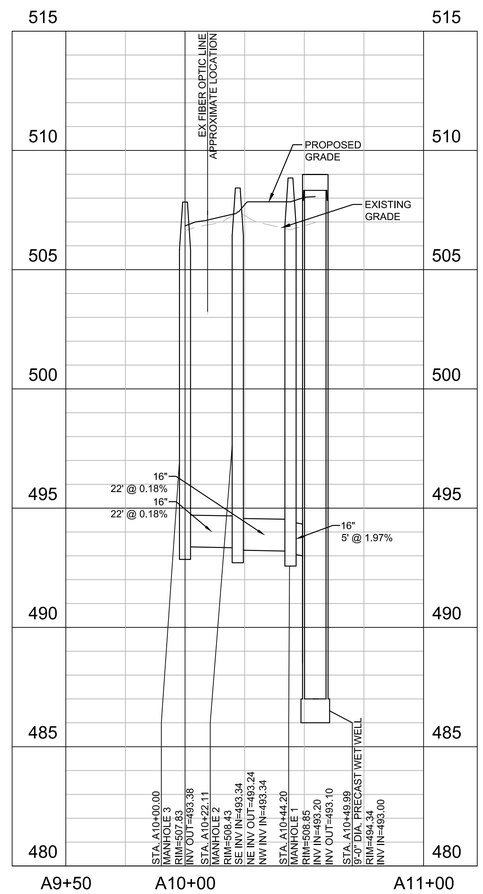

PROFILE A

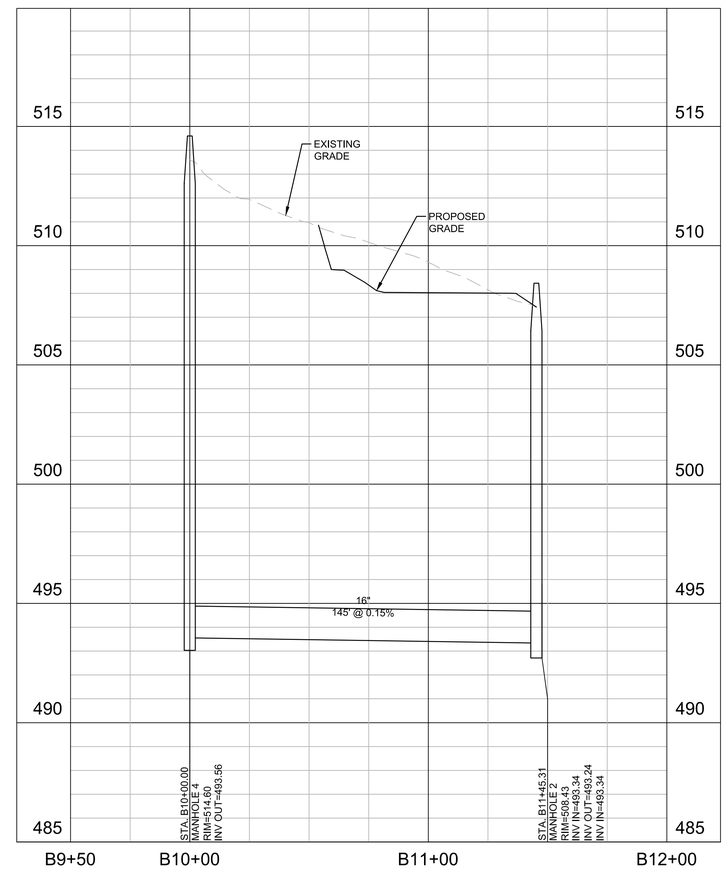

PROFILE B

HORIZONTAL
0' 30' 60'
1" = 30'

VERTICAL
0' 3' 6'
1" = 3'

INFLUENT GRAVITY SEWER PIPING
N.T.S.

Dewberry

Dewberry Engineers Inc.
4805 Lake Brook Drive, Suite 200
Glen Allen, Virginia 23060
PHONE: 804.290.7957
FAX: 804.290.7928
www.dewberry.com

ZION CROSSROADS
WATER BOOSTER PUMP STATION
AND WASTEWATER PUMP STATION
FLUVANNA COUNTY
DEPARTMENT OF PUBLIC WORKS
FLUVANNA COUNTY, VA.

KEY PLAN

SEAL
COMMONWEALTH OF VIRGINIA
DANYLO A. VILLIHAUER
Lic. No. 046419
5/4/2018
PROFESSIONAL ENGINEER

SCALE

No.	DATE	BY	Description

REVISIONS

DRAWN BY	BMM & JEH
APPROVED BY	DAV
CHECKED BY	BJH
DATE	MAY 2018

TITLE

WWPS
DETAILS

PROJECT NO. 50078863

C1.6

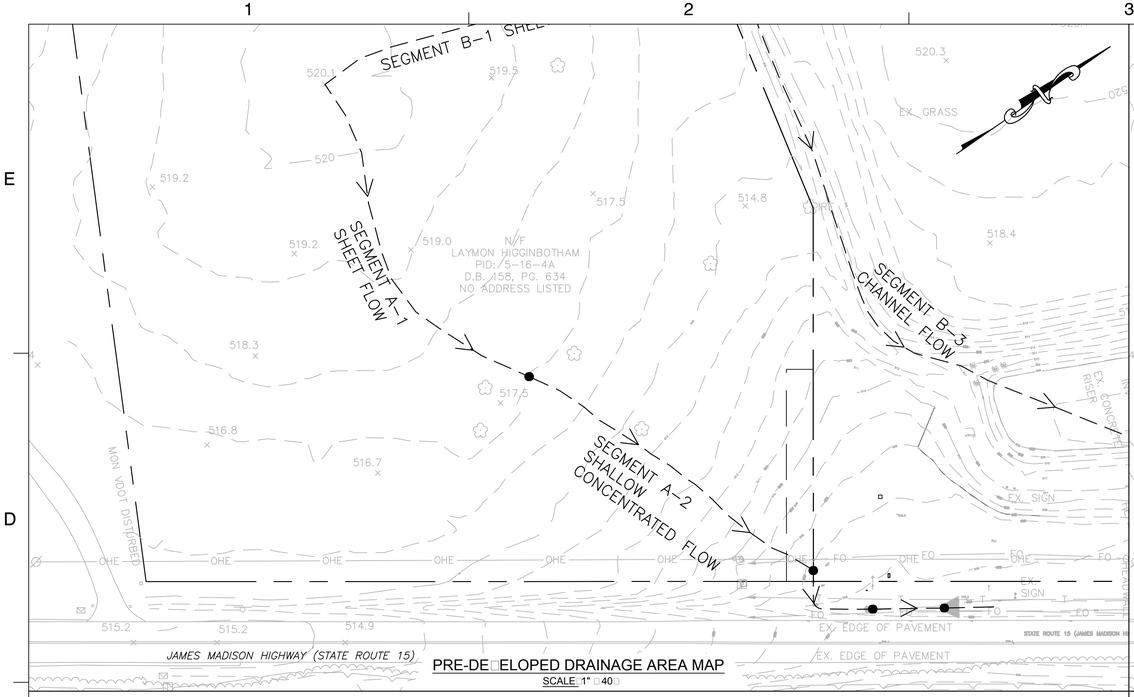

PRE-DE□ELOPED DRAINAGE AREA MAP

SCALE: 1" □40□

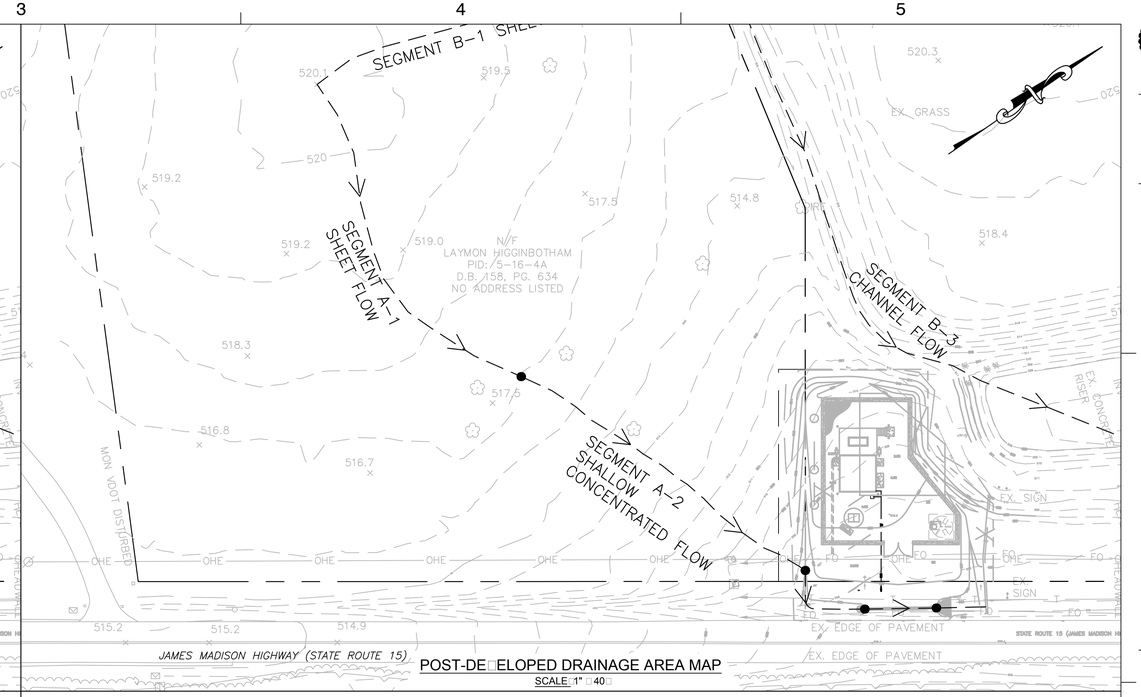

POST-DE□ELOPED DRAINAGE AREA MAP

SCALE: 1" □40□

PRE-DE□ELOPED T□CALCS

SUBBASIN		Project Site
Sheet flow Segment ID		A-1
Surface description		Grass, dense
Manning's roughness coeff., n		0.240
Flow length, L	(ft)	200
Tw o-yr 24-hr rainfall, P2	(in)	3.20
Land slope, s	(ft/ft)	0.016
Tt = [0.007(nL)^0.8]/[(P2^0.5)(s^0.4)]	(hr)	0.459
Shallow concentrated flow Segment ID		A-2
Surface description		Unpaved
Flow length, L	(ft)	225
Watercourse slope, s	(ft/ft)	0.0520
Average velocity, V	(fps)	3.7
Tt = L/(3600*V)	(hr)	0.017
Channel/Pipe flow Segment ID		A-3
Pipe Diameter	(in)	
Channel Data		Ditch
bottom w idth	(ft)	0
side slope z:1		2.75
depth	(ft)	0.59
Cross sectional flow area, a		1.000
Wetted perimeter, Pw		3.450
Hydraulic radius, r = a/Pw		0.290
Channel slope, s	(ft/ft)	0.0064
Manning's roughness coeff., n		0.030
V =(1.49*r^2/3*s^1/2)/n; Compute V		1.740
Flow length, L	(ft)	80
Tt = L/(3600*V); Compute Tt	(hr)	0.013
Watershed time of concentration, Tc	(hrs)	**0.489**
IN MINUTES		**29.3**
Lag Tc, Tlag = (0.6*Tc)	(hrs)	**0.293**

PRE-DE□ELOPED RUNOFF CALCS

DA:	Pre-Development Project Site					
	C-factor	Area	C*A			
Grass	0.35	2.79	0.98			
Trees	0.20	0.00	0.00			
Gravel	0.70	0.00	0.00			
Building / road	0.90	0.05	0.05			
		Area	Total C-factor			
		2.84	**0.36**			
Tc:	**29.3 minutes** (from table at left)					
	I_2 =	2.27	Q_2 =	**2.32**	**cfs**	
	I_{10} =	3.14	Q_{10} =	**3.21**	**cfs**	
	I_{25} =	3.69	Q_{25} =	**3.8**	**cfs**	
	I_{50} =	3.90	Q_{50} =	**4.0**	**cfs**	
	I_{100} =	4.32	Q_{100} =	**4.42**	**cfs**	

STORMWATER NARRATIVE

FLUVANNA COUNTY IS NOT IN A CHESAPEAKE BAY PRESERVATION AREA, AND THE PROJECT CONSISTS OF LAND DISTURBANCE BETWEEN 10,000 SF AND 1 ACRE. THEREFORE, A STORMWATER MANAGEMENT PLAN IS NOT REQUIRED. HOWEVER, AN EROSION & SEDIMENT CONTROL PLAN IS REQUIRED AND HAS BEEN PREPARED.

MS-19 HAS BEEN MET BY PROVING THE DOWNSTREAM RECEIVING DITCH IS ADEQUATE FOR THE 2-YEAR STORM VELOCITY (NON-EROSIVE, SEE TABLE 3.18-A THIS SHEET) AND 10-YEAR STORM CAPACITY (DEPTH, SEE CROSS SECTION THIS SHEET).

CULVERT CALCULATION

THE PROPOSED 15" ENTRANCE CULVERT HAS A DRAINAGE AREA OF 2.65 ACRES AND A Q10 OF 2.96 CFS. SEE BELOW FOR CALCULATION.

Culvert Computations

PROJECT:	***FLUVANNA CO. WWPS***
DATE:	9-Dec-16
DESIGNER:	HGS
STATION:	ENTRANCE
STRUCTURE:	N/A

HYDROLOGICAL DATA:

X	Method:	Rational		
X	Drainage Area:	2.645 acres		Stream Slope:
X	Channel Shape:	V (triangular)		
	Routing:			Other:

DESIGN FLOWS / TAILWATERS:

R.I. (years)	Flow (cfs)	TW (ft)
10	2.96	0.56

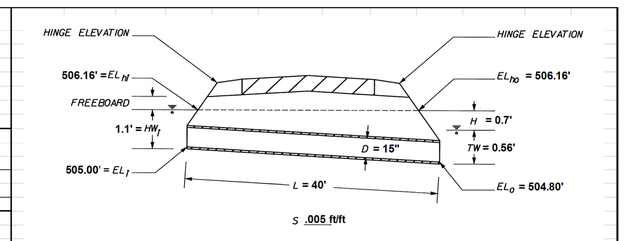

	CULVERT DESCRIPTION:				Total Flow Q (cfs)	Flow Per Barrel Q/N (1.)	HEADWATER CALCULATIONS										OUTLET		
							INLET CONTROL				OUTLET CONTROL						Control Headwater Elevation	VELOCITY	
	Material	Shape	Size	Entrance			HW_i / D (2.)	HW_i	FALL (3.)	EL_{hi} (4.)	TW (5.)	d_c	$(d_c + D) / 2$	h_o (6.)	H (7.)	EL_{ho} (8.)		C.M. (9.)	Conc. (9.)
POST	RCP	Circ.	15	ES	2.96	2.96	0.848	1.1	0.000	506.16	0.56	0.73	0.99	0.99	0.7	506.16	Outlet		2.98

POST-DE□ELOPED T□CALCS

SUBBASIN		Project Site
Sheet flow Segment ID		B-1
Surface description		Grass, dense
Manning's roughness coeff., n		0.240
Flow length, L	(ft)	200
Tw o-yr 24-hr rainfall, P2	(in)	3.20
Land slope, s	(ft/ft)	0.016
Tt = [0.007(nL)^0.8]/[(P2^0.5)(s^0.4)]	(hr)	0.459
Shallow concentrated flow Segment ID		B-2
Surface description		Unpaved
Flow length, L	(ft)	193
Watercourse slope, s	(ft/ft)	0.0576
Average velocity, V	(fps)	3.9
Tt = L/(3600*V)	(hr)	0.014
Channel/Pipe flow Segment ID		B-3
Pipe Diameter	(in)	
Channel Data		
bottom w idth	(ft)	0
side slope z:1		3
depth	(ft)	1
Cross sectional flow area, a		3.00
Wetted perimeter, Pw		6.40
Hydraulic radius, r = a/Pw		0.47
Channel slope, s	(ft/ft)	0.025
Manning's roughness coeff., n		0.03
V =(1.49*r^2/3*s^1/2)/n; Compute V		4.739
Flow length, L	(ft)	53
Tt = L/(3600*V); Compute Tt	(hr)	0.003
Channel/Pipe flow Segment ID		B-4
Pipe Diameter	(in)	15
Channel Data		
bottom w idth	(ft)	
side slope z:1		
depth	(ft)	
Cross sectional flow area, a		1.23
Wetted perimeter, Pw		3.93
Hydraulic radius, r = a/Pw		0.313
Channel slope, s	(ft/ft)	0.0050
Manning's roughness coeff., n		0.013
V =(1.49*r^2/3*s^1/2)/n; Compute V		3.732
Flow length, L	(ft)	40
Tt = L/(3600*V); Compute Tt	(hr)	0.003
Channel/Pipe flow Segment ID		B-5
Pipe Diameter	(in)	
Channel Data		
bottom w idth	(ft)	0
side slope z:1		3.5
depth	(ft)	1
Cross sectional flow area, a		4.00
Wetted perimeter, Pw		7.30
Hydraulic radius, r = a/Pw		0.55
Channel slope, s	(ft/ft)	0.006
Manning's roughness coeff., n		0.03
V =(1.49*r^2/3*s^1/2)/n; Compute V		2.576
Flow length, L	(ft)	27.5
Tt = L/(3600*V); Compute Tt	(hr)	0.003
Watershed time of concentration, Tc	(hrs)	**0.482**
IN MINUTES		**28.9**
Lag Tc, Tlag = (0.6*Tc)	(hrs)	**0.289**

POST-DE□ELOPED RUNOFF CALCS

DA:	Post-Development Project site					
	C-factor	Area	C*A			
Grass	0.35	2.65	0.93			
Trees	0.20	0.00	0.00			
Gravel	0.70	0.00	0.00			
Building / road	0.90	0.19	0.17			
		Area	Total C-factor			
		2.84	**0.39**			
Tc:	**28.9 minutes** (from table at left)					
	I_2 =	2.29	Q_2 =	**2.5**	**cfs**	
	I_{10} =	3.17	Q_{10} =	**3.48**	**cfs**	
	I_{25} =	3.71	Q_{25} =	**4.1**	**cfs**	
	I_{50} =	3.93	Q_{50} =	**4.3**	**cfs**	
	I_{100} =	4.35	Q_{100} =	**4.8**	**cfs**	

TABLE 3.18-A

PERMISSIBLE VELOCITIES FOR GRASS-LINED CHANNELS

Channel Slope	Lining	Velocity* (ft./sec.)
0 - 0.5% OUTFALL CHANNEL SLOPE=0.64%	Bermudagrass	6
	Reed canarygrass Tall fescue Kentucky bluegrass	5
	Grass-legume mixture	4
	Red fescue Redtop Sericea lespedeza Annual lespedeza Small grains Temporary vegetation	1.85 FPS < 4 FPS; THEREFORE ADEQUATE 2.5
5 - 10%	Bermudagrass	5
	Reed canarygrass Tall fescue Kentucky bluegrass	4
	Grass-legume mixture	3
Greater than 10%	Bermudagrass	4
	Reed canarygrass Tall fescue Kentucky bluegrass	3

* For highly erodible soils, decrease permissible velocities by 25%.

Source: Soil and Water Conservation Engineering, Schwab, et. al, and American Society of Civil Engineers

MS-19 CROSS-SECTION CALCULATIONS:

INPUTS:
Q2 = 2.5 CFS
Q10 = 3.48 CFS
FLOW ELEMENT = TRIANGULAR CHANNEL
SLOPE = 0.64%
MANNING'S "n" COEFFICIENT = 0.03
(ROUGH CHANNEL WITH GRASS)

OUTPUTS:
2-YEAR VELOCITY = 1.85 FPS
10-YEAR DEPTH = 0.76'

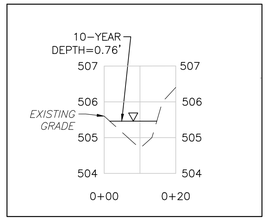

SCALES:
H: 1'=20", V: 1"=2'

Dewberry

Dewberry Engineers Inc.
4805 Lake Brook Drive, Suite 200
Glen Allen, Virginia 23060
PHONE: 804.290.7957
FAX: 804.290.7928
www.dewberry.com

ZION CROSSROADS
WATER BOOSTER PUMP STATION
AND WASTEWATER PUMP STATION
FLUVANNA COUNTY
DEPARTMENT OF PUBLIC WORKS
FLUVANNA COUNTY, VA

KEY PLAN

SEAL

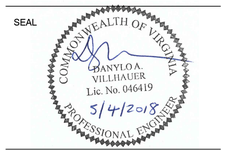

SCALE

0' 40' 80'
GRAPHIC SCALE

No.	DATE	BY	Description

REVISIONS

DRAWN BY	BMM & JEH
APPROVED BY	DAV
CHECKED BY	BJH
DATE	MAY 2018

TITLE

WWPS
PRE- AND POST-
DEVELOPMENT
DRAINAGE AREA MAPS

PROJECT NO. 50078863

C1.7

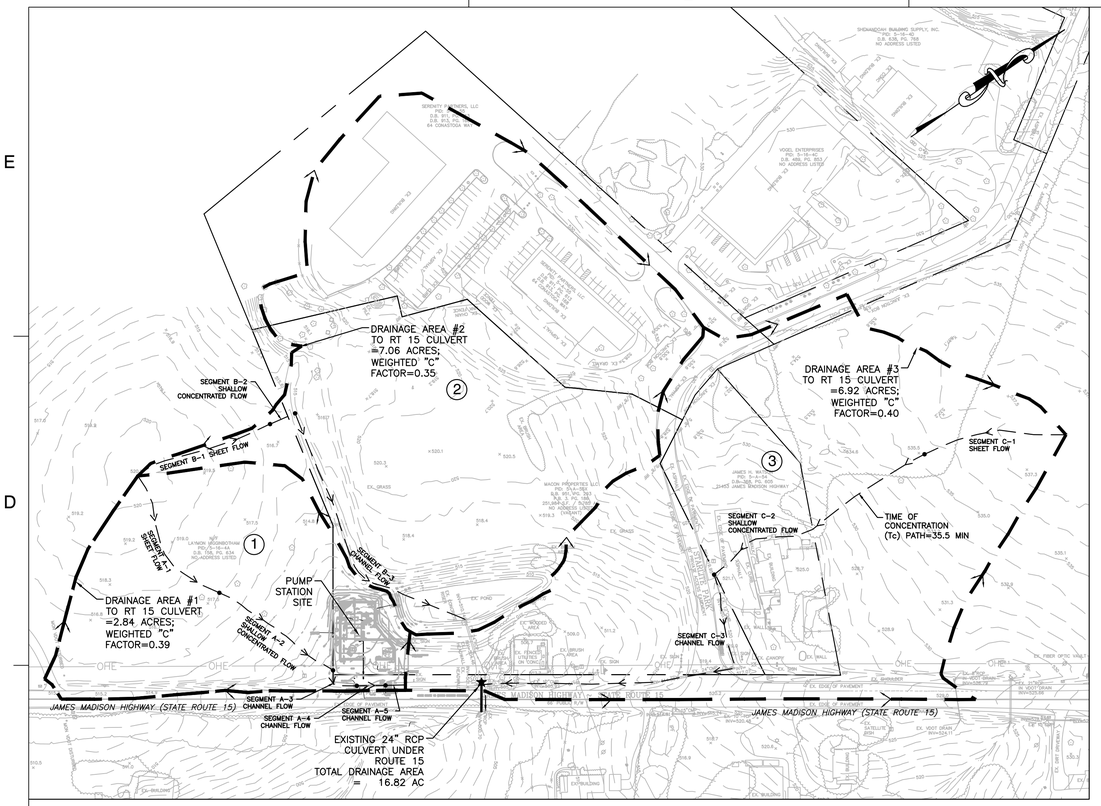

DRAINAGE AREA MAP TO RT. 15 CUL□ERT

SCALE: 1" □ 100□

10-YEAR SI□ING CALC - THREE COMBINED DRAINAGE AREAS

Culvert Calculator Report
Rt 15 Culvert

Solve For: Section Size — THIS IS THE ELEV. OF RT 15

Culvert Summary			
Allowable HW Elevation	507.20 ft	Headwater Depth/Height	3.80
Computed Headwater Elev	507.10 ft	Discharge	19.21 cfs
Inlet Control HW Elev.	507.10 ft	Tailwater Elevation	500.70 ft
Outlet Control HW Elev.	506.21 ft	Control Type	Inlet Control

Grades			
Upstream Invert	501.41 ft	Downstream Invert	500.70 ft
Length	38.00 ft	Constructed Slope	0.018684 ft/ft

Hydraulic Profile			
Profile	CompositeM2PressureProfile	Depth, Downstream	1.46 ft
Slope Type	Mild	Normal Depth	N/A ft
Flow Regime	Subcritical	Critical Depth	1.46 ft
Velocity Downstream	10.95 ft/s	Critical Slope	0.029647 ft/ft

Section			
Section Shape	Circular	Mannings Coefficient	0.013
Section Material	Concrete	Span	1.50 ft
Section Size	18 inch	Rise	1.50 ft
Number Sections	1		

Outlet Control Properties			
Outlet Control HW Elev.	506.21 ft	Upstream Velocity Head	1.84 ft
Ke	0.50	Entrance Loss	0.92 ft

Inlet Control Properties			
Inlet Control HW Elev.	507.10 ft	Flow Control	Submerged
Inlet Type	Square edge w/headwall	Area Full	1.8 ft²
K	0.00980	HDS 5 Chart	1
M	2.00000	HDS 5 Scale	1
C	0.03980	Equation Form	1
Y	0.67000		

100-YEAR SI□ING CALC - THREE COMBINED DRAINAGE AREAS

Culvert Calculator Report
Rt 15 Culvert

Solve For: Section Size — THIS IS THE ELEV. OF RT 15

Culvert Summary			
Allowable HW Elevation	507.20 ft	Headwater Depth/Height	2.08
Computed Headwater Elev	505.57 ft	Discharge	26.53 cfs
Inlet Control HW Elev.	505.57 ft	Tailwater Elevation	500.70 ft
Outlet Control HW Elev.	505.06 ft	Control Type	Inlet Control

Grades			
Upstream Invert	501.41 ft	Downstream Invert	500.70 ft
Length	38.00 ft	Constructed Slope	0.018684 ft/ft

Hydraulic Profile			
Profile	S2	Depth, Downstream	1.52 ft
Slope Type	Steep	Normal Depth	1.43 ft
Flow Regime	Supercritical	Critical Depth	1.80 ft
Velocity Downstream	10.36 ft/s	Critical Slope	0.012119 ft/ft

Section			
Section Shape	Circular	Mannings Coefficient	0.013
Section Material	Concrete	Span	2.00 ft
Section Size	24 inch	Rise	2.00 ft
Number Sections	1		

Outlet Control Properties			
Outlet Control HW Elev.	505.06 ft	Upstream Velocity Head	1.24 ft
Ke	0.50	Entrance Loss	0.62 ft

Inlet Control Properties			
Inlet Control HW Elev.	505.57 ft	Flow Control	Submerged
Inlet Type	Square edge w/headwall	Area Full	3.1 ft²
K	0.00980	HDS 5 Chart	1
M	2.00000	HDS 5 Scale	1
C	0.03980	Equation Form	1
Y	0.67000		

COMBINED DRAINAGE AREA NOTE□

D.A. #1 CONTRIBUTES 2.84 AC AND A Q10 OF 3.48 CFS
D.A. #2 CONTRIBUTES 7.06 AC AND A Q10 OF 7.98 CFS
D.A. #3 CONTRIBUTES 6.92 AC AND A Q10 OF 7.75 CFS
*THE TOTAL DRAINAGE AREA TO THE RT. 15 CULVERT IS 16.82 AC AND THE TOTAL 10YR FLOW, IF BROKEN DOWN INTO THREE SEPARATE AREAS, IS 19.21 CFS.

POST-DE□ELOPED T□CALCS

SUBBASIN		Rt 15 Culvert
Sheet flow	**Segment ID**	B-1
Surface description		Grass, dense
Manning's roughness coeff., n		0.240
Flow length, L	(ft)	200
Two-yr 24-hr rainfall, P2	(in)	3.20
Land slope, s	(ft/ft)	0.011
Tt = [0.007(nL)^0.8]/[(P2^0.5)(s^0.4)]	(hr)	0.526
Shallow concentrated flow	**Segment ID**	B-2
Surface description		Unpaved
Flow length, L	(ft)	347
Watercourse slope, s	(ft/ft)	0.0450
Average velocity, V	(fps)	3.4
Tt = L/(3600*V)	(hr)	0.028
Channel/Pipe flow	**Segment ID**	B-3
Pipe Diameter	(in)	
Channel Data		
bottom width	(ft)	0
side slope z:1		2
depth	(ft)	1
Cross sectional flow area, a		2.00
Wetted perimeter, Pw		8.47
Hydraulic radius, r = a/Pw		0.24
Channel slope, s	(ft/ft)	0.038
Manning's roughness coeff., n		0.03
V ={1.49*r^2/3*s^1/2}/n; Compute V		3.699
Flow length, L	(ft)	492
Tt = L/(3600*V); Compute Tt	(hr)	0.037
Watershed time of concentration, Tc	(hrs)	**0.591**
IN MINUTES		**35.5**
Lag Tc, Tlag = (0.6*Tc)	(hrs)	**0.355**

POST-DE□ELOPED RUNOFF CALCS

DA:	Rt 15 Culvert		
	C-factor	Area	C*A
Grass	0.35	14.17	4.96
Trees	0.20	1.49	0.30
Gravel	0.70	0.00	0.00
Building / road	0.90	1.16	1.04
		Area	Total C-factor
		16.82	**0.37**
Tc:	**35.5 minutes** (from table at left)		

I_2 =	2.01	Q_2 =	**12.7 cfs**
I_{10} =	2.82	Q_{10} =	**17.77 cfs**
I_{25} =	3.34	Q_{25} =	**21.0 cfs**
I_{50} =	3.54	Q_{50} =	**22.3 cfs**
I_{100} =	3.95	Q_{100} =	**24.9 cfs**

CUL□ERT ADEQUACY CALCULATION

THE EXISTING 24" CULVERT UNDER ROUTE 15 HAS A DRAINAGE AREA OF 16.82 ACRES, A WEIGHTED "C" FACTOR OF 0.37, A Q10 OF 17.77 CFS, AND A Q100 OF 24.90 CFS. SEE CALCULATION TO THE RIGHT FOR PROOF OF ADEQUACY – 18" DIAMETER WOULD BE SUFFICIENT FOR 10-YEAR STORM, 21" DIAMETER FOR 100-YEAR STORM. 24" > 18" AND 24" > 21"; THEREFORE, THE CULVERT IS ADEQUATE.

10-YEAR SI□ING CALC - O□ERALL DRAINAGE AREA

Culvert Calculator Report
Rt 15 Culvert

Solve For: Section Size — THIS IS THE ELEV. OF RT 15

Culvert Summary			
Allowable HW Elevation	507.20 ft	Headwater Depth/Height	3.34
Computed Headwater Elev	506.43 ft	Discharge	17.77 cfs
Inlet Control HW Elev.	506.43 ft	Tailwater Elevation	500.70 ft
Outlet Control HW Elev.	505.62 ft	Control Type	Inlet Control

Grades			
Upstream Invert	501.41 ft	Downstream Invert	500.70 ft
Length	38.00 ft	Constructed Slope	0.018684 ft/ft

Hydraulic Profile			
Profile	CompositeM2PressureProfile	Depth, Downstream	1.45 ft
Slope Type	Mild	Normal Depth	N/A ft
Flow Regime	Subcritical	Critical Depth	1.45 ft
Velocity Downstream	10.16 ft/s	Critical Slope	0.025072 ft/ft

Section			
Section Shape	Circular	Mannings Coefficient	0.013
Section Material	Concrete	Span	1.50 ft
Section Size	18 inch	Rise	1.50 ft
Number Sections	1		

Outlet Control Properties			
Outlet Control HW Elev.	505.62 ft	Upstream Velocity Head	1.57 ft
Ke	0.50	Entrance Loss	0.79 ft

Inlet Control Properties			
Inlet Control HW Elev.	506.43 ft	Flow Control	Submerged
Inlet Type	Square edge w/headwall	Area Full	1.8 ft²
K	0.00980	HDS 5 Chart	1
M	2.00000	HDS 5 Scale	1
C	0.03980	Equation Form	1
Y	0.67000		

100-YEAR SI□ING CALC - O□ERALL DRAINAGE AREA

Culvert Calculator Report
Rt 15 Culvert

Solve For: Section Size — THIS IS THE ELEV. OF RT 15

Culvert Summary			
Allowable HW Elevation	507.20 ft	Headwater Depth/Height	3.10
Computed Headwater Elev	506.83 ft	Discharge	24.90 cfs
Inlet Control HW Elev.	506.83 ft	Tailwater Elevation	500.70 ft
Outlet Control HW Elev.	505.85 ft	Control Type	Inlet Control

Grades			
Upstream Invert	501.41 ft	Downstream Invert	500.70 ft
Length	38.00 ft	Constructed Slope	0.018684 ft/ft

Hydraulic Profile			
Profile	CompositeM2PressureProfile	Depth, Downstream	1.68 ft
Slope Type	Mild	Normal Depth	N/A ft
Flow Regime	Subcritical	Critical Depth	1.68 ft
Velocity Downstream	10.50 ft/s	Critical Slope	0.021502 ft/ft

Section			
Section Shape	Circular	Mannings Coefficient	0.013
Section Material	Concrete	Span	1.75 ft
Section Size	21 inch	Rise	1.75 ft
Number Sections	1		

Outlet Control Properties			
Outlet Control HW Elev.	505.85 ft	Upstream Velocity Head	1.67 ft
Ke	0.50	Entrance Loss	0.83 ft

Inlet Control Properties			
Inlet Control HW Elev.	506.83 ft	Flow Control	Submerged
Inlet Type	Square edge w/headwall	Area Full	2.4 ft²
K	0.00980	HDS 5 Chart	1
M	2.00000	HDS 5 Scale	1
C	0.03980	Equation Form	1
Y	0.67000		

Dewberry

Dewberry Engineers Inc.
4805 Lake Brook Drive, Suite 200
Glen Allen, Virginia 23060
PHONE: 804.290.7957
FAX: 804.290.7928
www.dewberry.com

ZION CROSSROADS
WATER BOOSTER PUMP STATION
AND WASTEWATER PUMP STATION
FLUVANNA COUNTY
DEPARTMENT OF PUBLIC WORKS
FLUVANNA COUNTY, VA

KEY PLAN

SEAL

COMMONWEALTH OF VIRGINIA
DANYLO A. VILLIHAUER
Lic. No. 046419
5/4/2018
PROFESSIONAL ENGINEER

SCALE

0' 100' 200'
GRAPHIC SCALE

No.	DATE	BY	Description

REVISIONS

DRAWN BY	BMM & JEH
APPROVED BY	DAV
CHECKED BY	BJH
DATE	MAY 2018

TITLE

ROUTE 15
CULVERT ANALYSIS

PROJECT NO. 50078863

C1.7B

BOS 2019-01-09 p.1416/1491

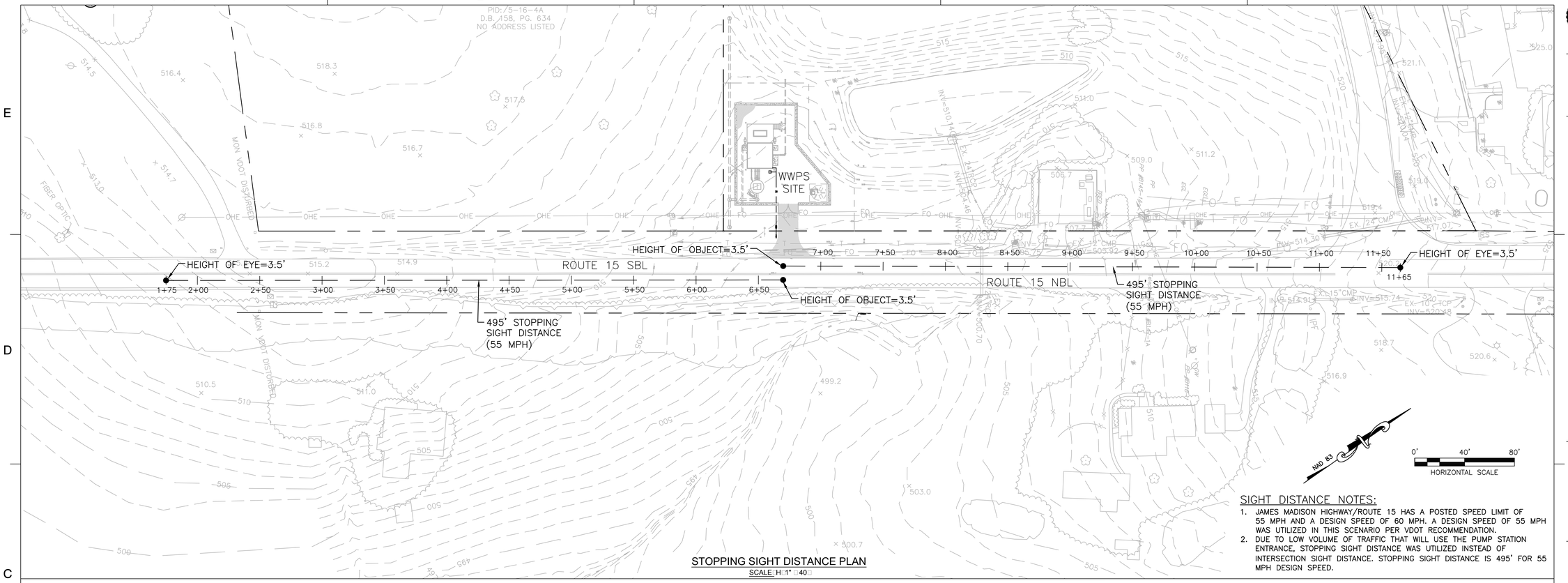

STOPPING SIGHT DISTANCE PLAN

SCALE: H: 1" = 40'

SIGHT DISTANCE NOTES:

1. JAMES MADISON HIGHWAY/ROUTE 15 HAS A POSTED SPEED LIMIT OF 55 MPH AND A DESIGN SPEED OF 60 MPH. A DESIGN SPEED OF 55 MPH WAS UTILIZED IN THIS SCENARIO PER VDOT RECOMMENDATION.
2. DUE TO LOW VOLUME OF TRAFFIC THAT WILL USE THE PUMP STATION ENTRANCE, STOPPING SIGHT DISTANCE WAS UTILIZED INSTEAD OF INTERSECTION SIGHT DISTANCE. STOPPING SIGHT DISTANCE IS 495' FOR 55 MPH DESIGN SPEED.

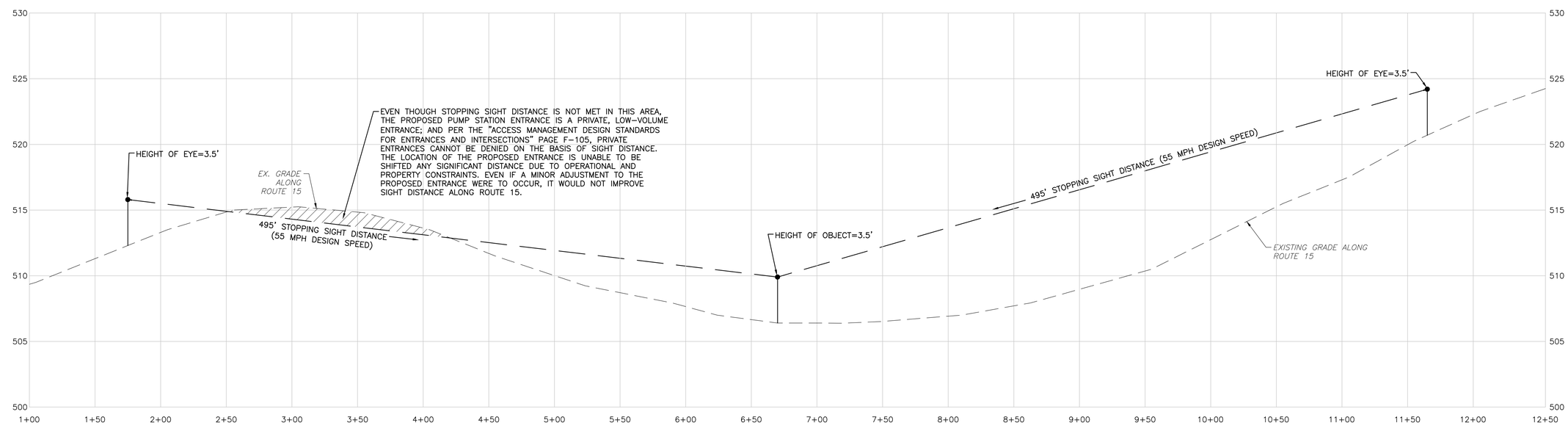

STOPPING SIGHT DISTANCE PROFILE

SCALES: H: 1" = 40' V: 1" = 4'

0' 40' 80'
HORIZONTAL SCALE

0' 4' 8'
VERTICAL SCALE

Dewberry

Dewberry Engineers Inc.
4805 Lake Brook Drive, Suite 200
Glen Allen, Virginia 23060
PHONE: 804.290.7957
FAX: 804.290.7928
www.dewberry.com

ZION CROSSROADS WATER BOOSTER PUMP STATION AND WASTEWATER PUMP STATION

FLUVANNA COUNTY
DEPARTMENT OF PUBLIC WORKS

FLUVANNA COUNTY, VA

KEY PLAN

SEAL

COMMONWEALTH OF VIRGINIA
DANYLO A. VILLIHAUER
Lic. No. 046419
5/4/2018
PROFESSIONAL ENGINEER

SCALE

No.	DATE	BY	Description

REVISIONS

DRAWN BY	BMM & JEH
APPROVED BY	DAV
CHECKED BY	BJH
DATE	MAY 2018

TITLE

WWPS
SIGHT DISTANCE
PLAN

PROJECT NO. 50078863

C1.8

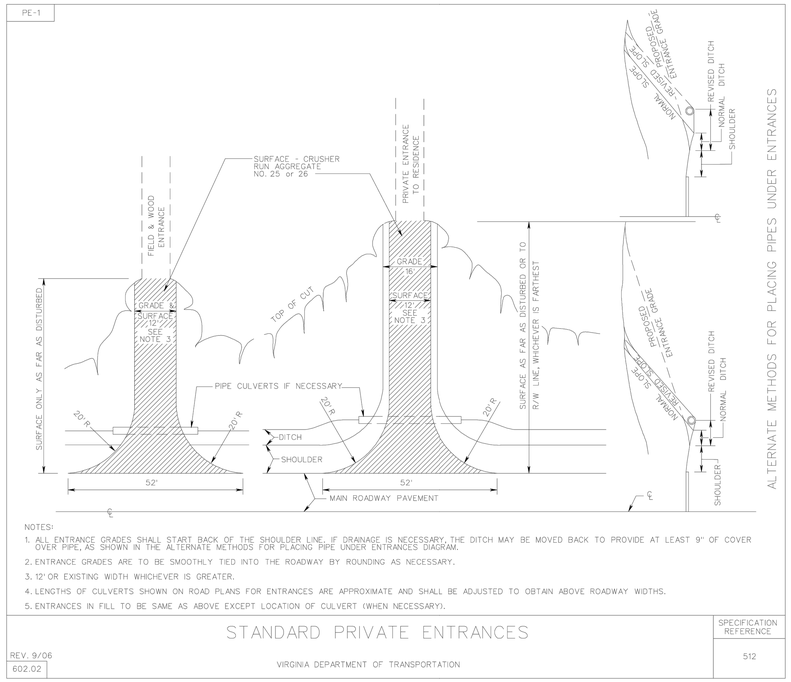

Page 6H-52 April 2015

Typical Traffic Control

Lane Closure on a Two-Lane Roadway Using Flaggers

(Figure TTC-23.1)

NOTES

Guidance:

1. *Sign spacing distance should be 350'-500' where the posted speed limit is 45 mph or less, and 500'-800' where the posted speed limit is greater than 45 mph.*
2. *Care should be exercised when establishing the limits of the work zone to insure maximum possible sight distance in advance of the flagger station and transition, based on the posted speed limit and at least equal to or greater than the values in Table 6H-3. Generally speaking, motorists should have a clear line of sight from the graphic flagger symbol sign to the flagger.*

Option:

3. Where Right-of-Way or geometric conditions prevent the use of 48" x 48" signs, 36" x 36" signs may be used.

Standard:

4. **Flagging stations shall be located far enough in advance of the work space to permit approaching traffic to reduce speed and/or stop before passing the work space and allow sufficient distance for departing traffic in the left lane to return to the right lane before reaching opposing traffic (see Table 6H-3 on Page 6H-5).**
5. **All flaggers shall be state certified and have their certification card in their possession when performing flagging duties (see Section 6E.01, Qualifications for Flaggers).**
6. **Cone spacing shall be based on the posted speed and the values in Table 6H-4 on Page 6H-6.**
7. **A shadow vehicle with at least one high intensity amber rotating, flashing, or[1] oscillating light shall be parked 80'-120' in advance of the first work crew.**

Option:

8. A supplemental flagger may be required in this area to give advance warning of the operation ahead by slowing approaching traffic prior to reaching the flagger station or queued traffic.

Guidance:

9. *If the queue of traffic reaches the BE PREPARED TO STOP (W3-4) sign then the signs[1] and if used the portable temporary rumble strips (PTRS)[1], should be readjusted at greater distances.*
10. *When a highway-rail crossing exists within or upstream of the transition area and it is anticipated that queues resulting from the lane closure might extend through the highway-rail grade crossing, the temporary traffic control zone should be extended so that the transition area precedes the highway-rail crossing (see Figure TTC-56 for additional information on highway-rail crossings).*

Standard:

11. **At night, flagger stations shall be illuminated, except in emergencies (see Section 6E.08).**

Option:

12. Cones may be eliminated when using a pilot vehicle operation or when the total roadway width is 20 feet or less.
13. For low-volume situations with short work zones on straight roadways where the flagger is visible to road users approaching from both directions, a single flagger, positioned to be visible to road users approaching from both directions, may be used (see Chapter 6E).

Standard:

14. **When approved for use, three portable temporary rumble (PTRS) strips shall be installed across the entire travel lane adjacent to the BE PREPARED TO STOP (W3-4) sign. The portable temporary rumble strips shall be monitored and adjusted as necessary during the work shift to ensure proper placement on the roadway. When the PTRS are installed, the RUMBLE STRIPS AHEAD (W20-V26) sign shall also be utilized.**

Posted Speed	0 – 35 mph	36 – 55 mph
PTRS Spacing (Center to Center)	5 Feet	8 Feet

1: Revision 1 – 4/1/2015

April 2015 Page 6H-53

Lane Closure on a Two-Lane Roadway Using Flaggers

(Figure TTC-23.1)

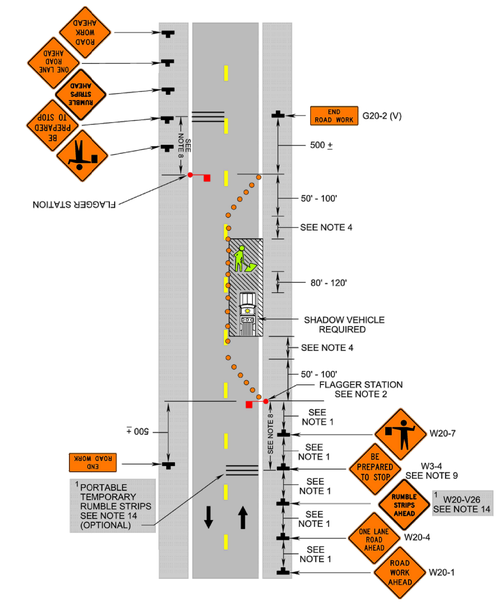

1: Revision 1 – 4/1/2015

Page 6H-112 August 2011

Typical Traffic Control

Signing for Project Limits

(Figure TTC-53.0)

NOTES

Support:

1. This layout depicts signing requirements for notifying motorist when they are entering and exiting a potential construction/maintenance area with a duration equal to or greater than 60 days.

Standard:

2. **The ROAD WORK AHEAD (W20-1) sign or the ROAD WORK NEXT XX MILES (G20-1 (V)) sign shall be placed far enough in advance of the project limits so that other warning signs in a series may be adequately placed prior to the condition they are warning about.**
3. **The ROAD WORK NEXT XX MILES sign shall be used for projects with activity areas greater than 2 miles in length, or when multiple work activities (such as pavement patching, guardrail installations, shoulder restoration, etc.) occur along a highway.**
4. **The distance displayed on the ROAD WORK NEXT XX MILES sign shall be stated to the nearest whole mile from the point of installation to the END ROAD WORK (G20-2 (V)) sign.**
5. **On divided highways having a median wider than 8', right and left sign assemblies shall be required.**

Guidance:

6. *For projects with activity areas 2 miles or less in length, the ROAD WORK AHEAD sign should be the first sign motorist encounter.*
7. *Sign spacing should be 1300'-1500' for Limited Access highways. For all other roadways, the sign spacing should be 500'-800' where the posted speed limit is greater than 45 mph, and 350'-500' where the posted speed limit is 45 mph or less.*
8. *All connections within the project limits should be identified with signs indicating to motorist they are entering or exiting a potential construction/maintenance area.*

August 2011 Page 6H-113

Signing for Project Limits

(Figure TTC-53.0)

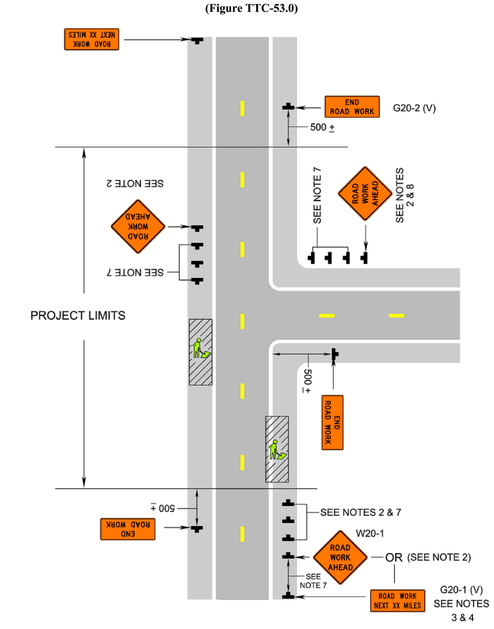

VDOT GENERAL NOTES:

1. A VDOT PERMIT WILL BE REQUIRED PRIOR TO THE START OF WORK AND CAN BE APPLIED FOR PRIOR TO THE PRE–CONSTRUCTION MEETING SO THAT IT MAY BE PRESENTED AT THAT TIME SO THAT ANY QUESTIONS OR CONCERNS ABOUT THE PERMIT MAY BE ANSWERED.
2. PRE–CONSTRUCTION IS REQUIRED ON SITE TO GO OVER CONSTRUCTION TIME FRAME FOR STARTING AND COMPLETING ROAD IMPROVEMENTS WITHIN THE RIGHT OF WAY.
3. ALL WORK TO BE CONSTRUCTED TO THE LATEST VDOT ROAD AND BRIDGE SPECIFICATIONS AND ROAD AND BRIDGE STANDARDS.
4. ALL MATERIALS TO BE USED IN CURRENT AND FUTURE RIGHT OF WAY WILL BE TESTED AS STATED IN THE VDOT MANUAL OF INSTRUCTIONS AVAILABLE UNDER VDOT MATERIAL DIVISION FOR PLACEMENT AND REQUIRED TESTING AND INTERVALS. ALSO VDOT INSPECTOR WILL ALSO BE AVAILABLE TO ANSWER QUESTIONS OR CONCERNS AND VISIT SITE AS REQUESTED TO REVIEW.
5. ALL TRAFFIC CONTROL WILL BE PER THE LATEST EDITION OF THE VIRGINIA WORK AREA PROTECTION MANUAL OR PER THE APPROVED MAINTENANCE OF TRAFFIC PLAN SHEETS PROVIDED BY THE DEVELOPERS ENGINEER AND APPROVED PRIOR TO JOB GOING TO CONSTRUCTION. THE CONTRACTOR WILL HAVE AVAILABLE AT ALL TIMES A CERTIFIED PERSON AT A MINIMUM WITH BASIC TRAFFIC CONTROL CERTIFICATION AND FOR MORE ADVANCED TRAFFIC CONTROL AN INDIVIDUAL WITH AN INTERMEDIATE TRAFFIC CONTROL CERTIFICATION WOULD BE PREFERRED FOR MORE COMPLEX LAYOUTS. ALLOWABLE WORK HOURS WILL BE REVIEWED WHEN PERMITTED IF NOT REFERRED TO IN THE APPROVED PLAN SET.
6. ALL STRUCTURES (DI'S) AND CROSS PIPE TO HAVE BACKFILL TESTING AND WILL NEED TO REFERENCE STRUCTURE NUMBER AS REFERRED TO ON THE PLAN SHOWING PROFILE AND DEPTH AND LOCATION OF TEST.
7. ALL CD'S AND UD'S TO BE INSPECTED PRIOR TO COVERING.
8. ALL FILL AREAS SHALL HAVE BACKFILL MATERIAL FROM AN APPROVED SOURCE OR A TESTED ON SITE SOURCE AND ALL TESTING REPORTS FOR THIS MATERIAL WILL NEED TO BE ATTACHED TO THE BACKFILL DENSITY REPORTS AND A PROFILE WILL NEED TO BE AVAILABLE WITH DEPTH AND LOCATION.
9. CBR'S WILL NEED TO BE MADE AVAILABLE FOR REVIEW AND APPROVAL AND AN IN THE FIELD SUB–GRADE INSPECTION BY VDOT INSPECTOR PRIOR TO PLACEMENT OF ANY BASE STONE. SUB–GRADE DENSITY REPORTS WILL ALSO NEED TO BE AVAILABLE OR TEST OCCURRING THE SAME DAY VDOT INSPECTOR IS ON SITE.
10. BASE STONE WILL NEED TO BE INSPECTED AND DEPTH CHECKED PRIOR TO PLACEMENT OF ANY ASPHALT BEING PLACED. ALSO THIRD PARTY INSPECTION REPORTS WILL NEED TO BE AVAILABLE FOR REVIEW AND OR TAKING PLACE THE SAME DAY AS THE VDOT INSPECTOR INSPECTS THE ROAD. REPORTS TO BE AVAILABLE WOULD BE ROLLER PATTERNS AND DENSITY PER THE VDOT MANUAL OF INSTRUCTIONS.
11. CONCRETE TESTING PER VDOT ROAD AND BRIDGE SPECIFICATIONS.
12. SIGNAGE LOCATIONS TO BE MARKED PRIOR TO PERMANENT INSTALLATION. AND PAVEMENT MARKINGS TO BE SKETCHED OUT ON ASPHALT WITH HEAVY CHALK OR LIGHTLY MARKED WITH WHITE PAINT PRIOR TO PLACEMENT OF PERMANENT MARKINGS.
13. WP–2 STANDARD TO BE ON PLAN SET FOR ALL COMMERCIAL ENTRANCES AND WILL ALSO BE PUT IN PERMIT IF NOT ON PLAN SET.
14. REPLACEMENT OF ALL RAISED TRAFFIC MARKERS AND PAVEMENT MARKINGS THAT ARE DISTURBED DURING CONSTRUCTION WILL BE REPLACED OR PAVEMENT MARKINGS REFRESHED FOR TIE IN BACK TO EXISTING ROAD ALIGNMENT FROM ROAD IMPROVEMENTS.
15. ALL EXISTING VDOT SIGNAGE IMPACTED BY ROAD IMPROVEMENTS WILL BE REVIEWED PRIOR TO REMOVAL FOR TEMPORARY STORAGE OR TEMPORARILY LOCATED AS REQUIRED, BUT WILL NOT BE REMOVED BY CONTRACTOR UNTIL VDOT INSPECTOR HAS REVIEWED. CERTAIN STORAGE REQUIREMENTS FOR SIGNAGE ARE REQUIRED DUE TO THE REFLECTIVE SHEETING. DO NOT STORE SIGNS FACE DOWN OR SHEETING TO SHEETING.

Dewberry

Dewberry Engineers Inc.
4805 Lake Brook Drive, Suite 200
Glen Allen, Virginia 23060
PHONE: 804.290.7957
FAX: 804.290.7928
www.dewberry.com

ZION CROSSROADS
WATER BOOSTER PUMP STATION
AND WASTEWATER PUMP STATION

FLUVANNA COUNTY
DEPARTMENT OF PUBLIC WORKS

FLUVANNA COUNTY, VA

KEY PLAN

SEAL

COMMONWEALTH OF VIRGINIA
DANYLO A. VILLHAUER
Lic. No. 046419
5/4/2018
PROFESSIONAL ENGINEER

SCALE

No.	DATE	BY	Description

REVISIONS

DRAWN BY	BMM & JEH
APPROVED BY	DAV
CHECKED BY	BJH
DATE	MAY 2018

TITLE

WWPS
VDOT NOTES
& DETAILS

PROJECT NO. 50078863

C1.9

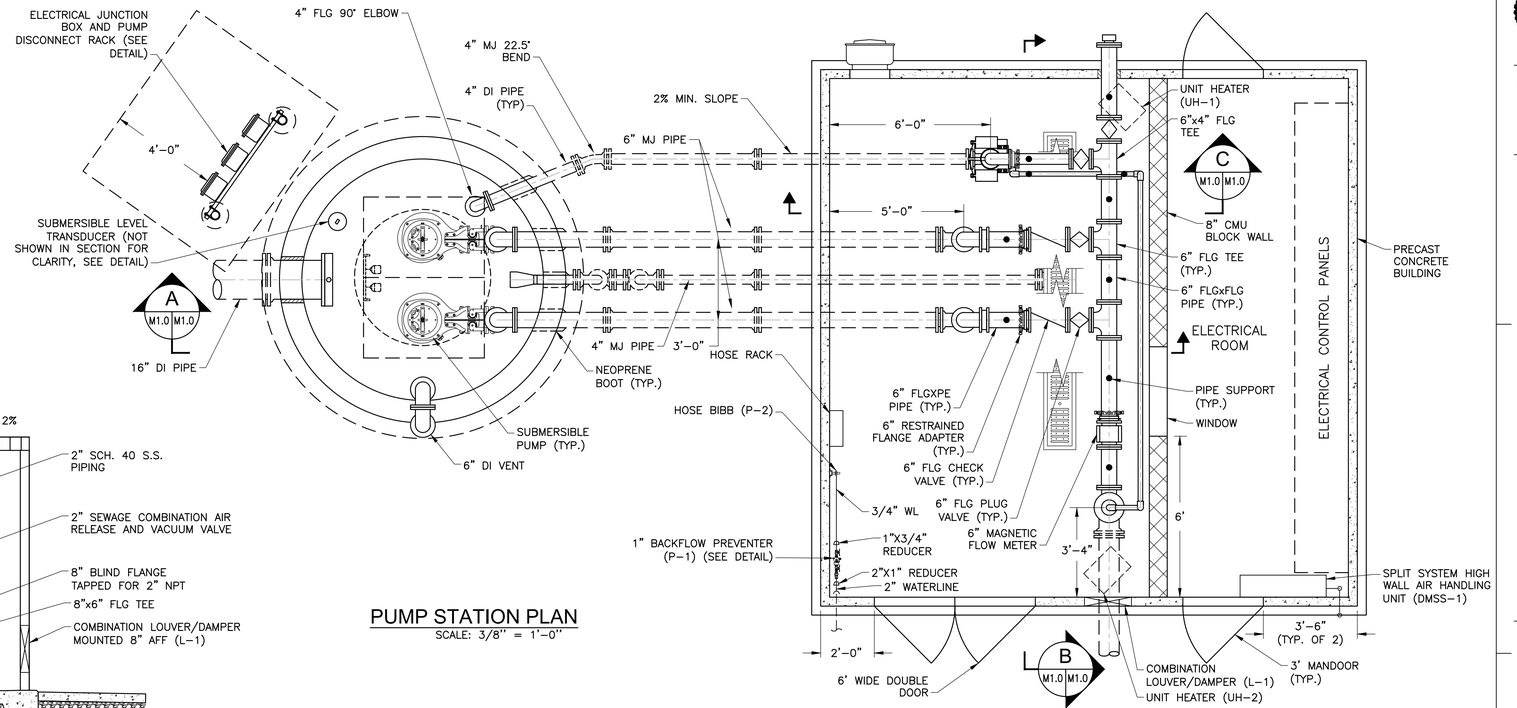

PUMP STATION PLAN

SCALE: 3/8" = 1'-0"

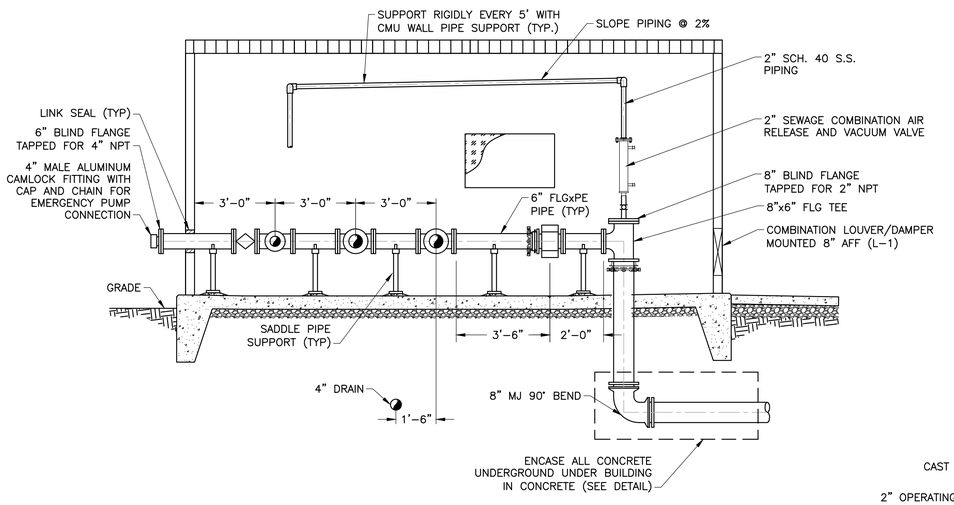

B M1.0 M1.0 PUMP STATION PLAN SECTION

SCALE: 3/8" = 1'-0"

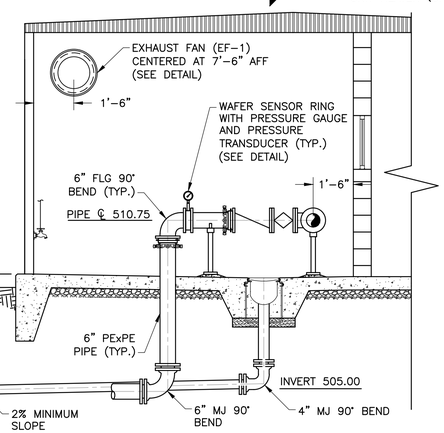

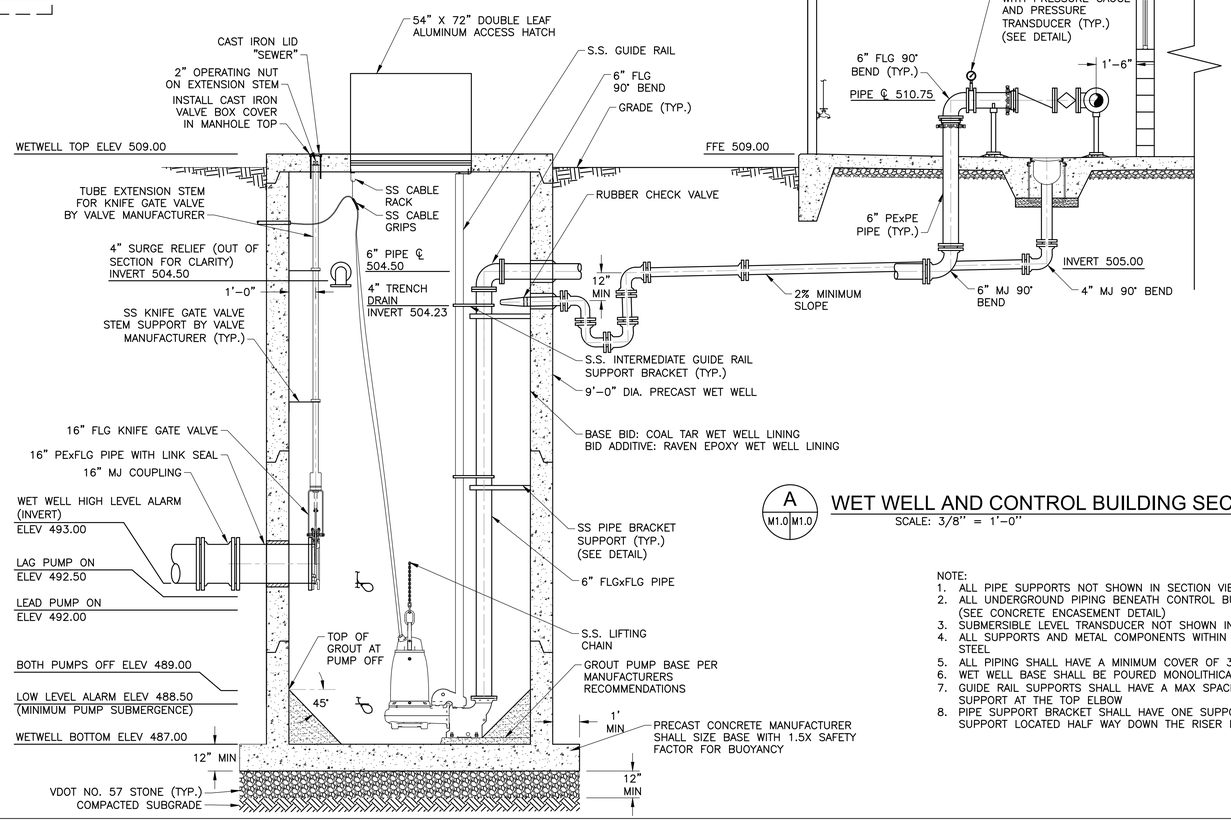

A M1.0 M1.0 WET WELL AND CONTROL BUILDING SECTION

SCALE: 3/8" = 1'-0"

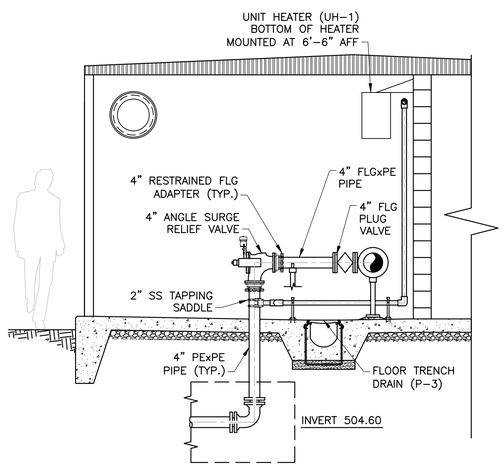

C M1.0 M1.0 SURGE RELIEF VALVE SECTION

SCALE: 3/8" = 1'-0"

NOTE:
1. ALL PIPE SUPPORTS NOT SHOWN IN SECTION VIEW
2. ALL UNDERGROUND PIPING BENEATH CONTROL BUILDING SHALL BE ENCASED IN CONCRETE (SEE CONCRETE ENCASEMENT DETAIL)
3. SUBMERSIBLE LEVEL TRANSDUCER NOT SHOWN IN SECTION VIEW FOR CLARITY
4. ALL SUPPORTS AND METAL COMPONENTS WITHIN THE WET WELL SHALL BE 304 STAINLESS STEEL
5. ALL PIPING SHALL HAVE A MINIMUM COVER OF 3'-6"
6. WET WELL BASE SHALL BE POURED MONOLITHICALLY WITH WALLS
7. GUIDE RAIL SUPPORTS SHALL HAVE A MAX SPACING OF L/r = 100 WITH THE FIRST SUPPORT AT THE TOP ELBOW
8. PIPE SUPPORT BRACKET SHALL HAVE ONE SUPPORT LOCATED AT THE TOP ELBOW AND ONE SUPPORT LOCATED HALF WAY DOWN THE RISER PIPE

Dewberry

Dewberry Engineers Inc.
4805 Lake Brook Drive, Suite 200
Glen Allen, Virginia 23060
PHONE: 804.290.7957
FAX: 804.290.7928
www.dewberry.com

ZION CROSSROADS WATER BOOSTER PUMP STATION AND WASTEWATER PUMP STATION

FLUVANNA COUNTY
DEPARTMENT OF PUBLIC WORKS

FLUVANNA COUNTY, VA.

KEY PLAN

SEAL

COMMONWEALTH OF VIRGINIA
DANYLO A. VILLIHAUER
Lic. No. 046419
5/4/2018
PROFESSIONAL ENGINEER

SCALE

GRAPHIC SCALE
3/8" = 1'-0"

No.	DATE	BY	Description

REVISIONS

DRAWN BY	BMM & JEH
APPROVED BY	DAV
CHECKED BY	BJH
DATE	MAY 2018

TITLE

WWPS LAYOUT

PROJECT NO. 50078863

M1.0

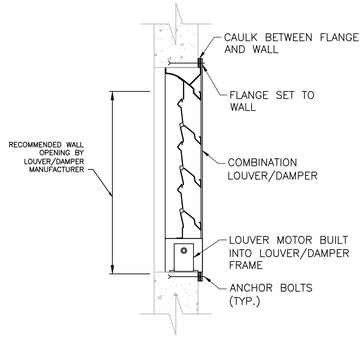

NOTES
1. FOR INSTALLATION ON PRECAST CONCRETE WALL, GRIND AREA ON BLOCK SMOOTH WHERE WALL COLLAR SEATS, SHIM AND CAULK AS REQUIRED.

FLANGE MOUNTED COMBINATION LOUVER/DAMPER
N.T.S. Source: Dewberry

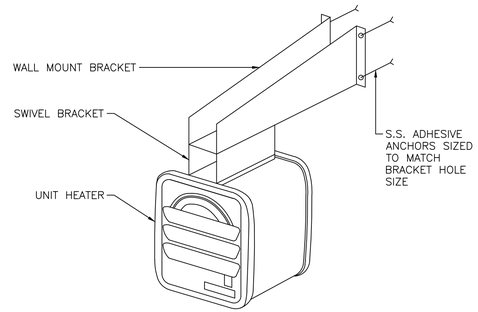

NOTES
1. MINIMUM MOUNTING HEIGHT (BOTTOM OF UNIT HEATER) 7', PREFERRED HEIGHT 8'
2. WALL MOUNT BRACKET TO BE SIZED AND SUPPLIED BY MANUFACTURER AS PART OF HEATER

ELECTRIC UNIT HEATER MOUNTING
N.T.S. Source: Dewberry

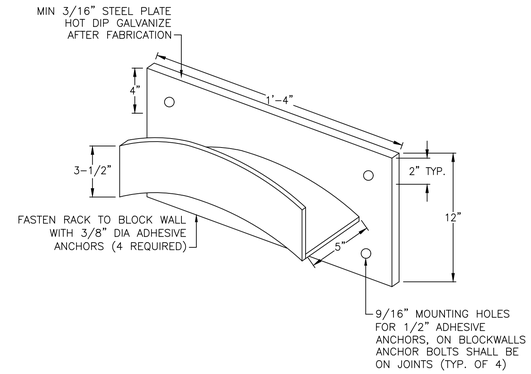

NOTES
1. CONTRACTOR SHALL SUPPLY A HOSE RACK AND 50' OF HEAVY DUTY 3/4" GARDEN HOSE AT EACH HOSE BIB.

HOSE RACK
N.T.S. Source: Dewberry

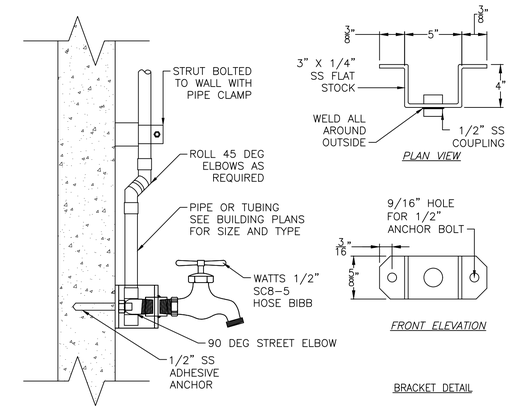

HOSE BIBB SURFACE MOUNT
N.T.S. Source: Dewberry

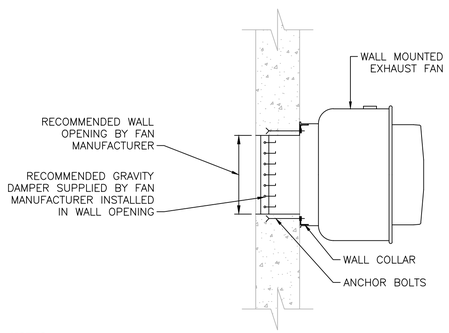

NOTES
1. FOR INSTALLATION ON SPLIT FACE BLOCK, GRIND AREA ON BLOCK SMOOTH WHERE WALL COLLAR SEATS, SHIM AND CAULK AS REQUIRED.
2. ALL CAVITIES AROUND WALL OPENING SHALL BE FILLED SOLID WITH MORTAR.
3. WHERE EXHAUST FAN IS INSTALLED ON CAVITY WALL CONSTRUCTION, CAVITY SHALLY BE FILLED SOLID WITH MORTAR ALL AROUND OPENING.

WALL MOUNTED EXHAUST FAN
N.T.S. Source: Dewberry

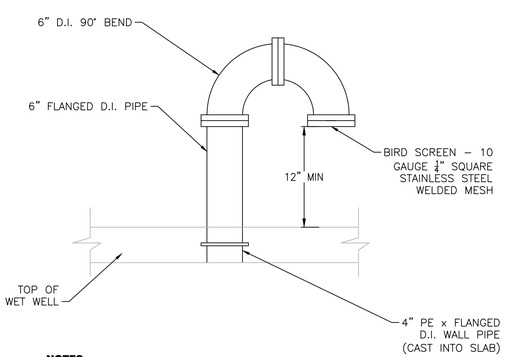

NOTES
1. PAINT EXPOSED PORTION OF PIPE BROWN PER PAINTING SPECIFICATIONS.

VENT PIPE PENETRATION
N.T.S. Source: Dewberry

UNIT HEATER SCHEDULE

UNIT DESIGNATION	AREA SER□ED	CAPACITY □KW□	HEATER ELECTRIC	FAN ELECTRIC	AIR□THROW	TYPE	MANUFACTURER	MODEL NO	OPTIONS	REMARKS
UH-1□UH-2	WWPS MECHANICAL ROOM	5.0 KW	480□□3 PHASE □6.3 AMPS	480□□1 PHASE □ □1/35□HP	380 CFM 12□HORI□ONTAL	WALL MOUNTED	CHROMALOX	H□H-05-43-30	WALL MOUNTED T□STAT □□	INSTALL WITH MANUFACTURER□S WALL BRACKET

COMBINATION LOUVER/DAMPER SCHEDULE

UNIT DESIGNATION	AREA SER□ED	FREE AREA SQ. FT.	SI□E □WXH□ INCHES	TYPE	MANUFACTURER	MODEL NO	MATERIAL	OPTIONS	REMARKS
L-1	WWPS MECHANICAL ROOM	0.98	21 □28	COMBINATION LOU□ER DAMPER	GREENHECK	EACC-601	ALUMINUM WITH MILL FINISH	BIRD SCREEN AND MOTORI□ED DAMPER □□	INTERLOCK WITH EF-1. LOU□ER TO BE FLANGE MOUNTED TO OUTSIDE OF THE BUILDING. DAMPER MOTOR TO BE LOCATED IN LOU□ER COMPARTMENT

EXHAUST FAN SCHEDULE

UNIT DESIGNATION	AREA SER□ED	CAPACITY □CFM□	STATIC PRESSURE □IN. W.C□	WALL OPENING SI□E □IN□	TYPE	MANUFACTURER	MODEL NO	MOTOR DATA HP	MOTOR DATA RPM	REMARKS
EF-1	WWPS MECHANICAL ROOM	581 591	0.15 0.125	10.5□10.5	DIRECT DRI□E	GREENHECK	CW-085 □ARI GREEN	1/6	□ARIABLE	INCLUDES GRA□ITY DAMPER CONTROL WITH WALL MOUNTED T□STAT AND HOA SWITCH □□ AND □ARI-GREEN SPEED CONTROL

□SEE ELECTRICAL DRAWINGS FOR CONTROL

SPLIT SYSTEM HEAT PUMP SCHEDULE

UNIT DESIGNATION	MANUFACTURER □MODEL		COOLING		HEATING			INDOOR UNIT				OUTDOOR UNIT				NOTES
	INDOOR UNIT	OUTDOOR UNIT	TOTAL CAP. MBH	SEER	TOTAL MBH	COP	ELEC. HEAT □KW□	TOTAL AMPS	MCA	BRKR	□OLT□ PH	TOTAL AMPS	MCA	BRKR	□OLT□ PH	
DMSS-1	EMI □WLHG	EMI □S1HG	18	13.0	16.4	3.5	3	13.6	17	20	208□1	6.7	8.2	15	208□1	1□2□3□4□5□6□7□8

NOTES□
1. PRO□IDE WITH MANUFACTURER SUPPLIED 24 □OLT WALL MOUNTED THERMOSTAT.
2. PRO□IDE ELECTRIC HEAT WITH AUTO RESET HIGH TEMPERATURE CUTOUT AND REDUNDANT HIGH TEMPERATURE FUSE LINK.
3. PRO□IDE WITH DISCONNECT FOR BOTH INDOOR AND OUTDOOR UNIT.
4. PRO□IDE WITH COPPER FIN□COPPER TUBE CONDENSER COIL.
5. PRO□IDE WITH CONDENSER COIL CORROSION PROTECTION COATING.
6. ALL PIPING AND CONDUIT SHALL BE RIGIDLY SUPPORTED.
7. ROUTE CONDENSATE DISCHARGE PIPING WITH SS SCREENED OUTLET TO OUTSIDE OF BUILDING 1□ABO□E FINISHED GRADE WITH SPLASH PAD BLOCK.
8. INSTALL CONDENSER UNIT ON CONCRETE EQUIPMENT PAD

PLUMBING FIXTURE SCHEDULE

MARK	FIXTURE	MANUFACTURER	DESCRIPTION (MODEL)	ROUGH-IN SIZES WASTE	VENT	C.W.	H.W.	T.W.	DESCRIPTION (MODEL)
P-1	BACKFLOW PREVENTER	WATTS	1" SERIES 009 REDUCED PRESSURE ZONE ASSEMBLY	–	–	1"	–	–	WATERLINE TO BE REDUCED TO 3/4" AFTER RPZ BACKFLOW PREVENTER.
P-2	HOSE BIBB	WATTS	1/2" SC8-5	–	–	1/2"	–	–	WATERLINE TO HOSE BIBB SHALL BE 3/4" AND SHALL BE TIED IN WITH A 3/4"x1/2" REDUCING BUSHING.
P-3	FLOOR TRENCH DRAIN	ABT	TRENCHFORMER	12"	–	–	–	–	PROVIDE WITH TR12-12.502D.FB HIGH INTAKE SLOTTED DUCTILE IRON GRATING.

Dewberry

Dewberry Engineers Inc.
4805 Lake Brook Drive, Suite 200
Glen Allen, Virginia 23060
PHONE: 804.290.7957
FAX: 804.290.7928
www.dewberry.com

ZION CROSSROADS
WATER BOOSTER PUMP STATION
AND WASTEWATER PUMP STATION
FLUVANNA COUNTY
DEPARTMENT OF PUBLIC WORKS
FLUVANNA COUNTY, VA.

KEY PLAN

SEAL

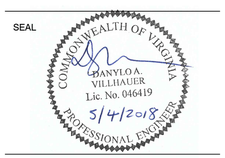

SCALE

No.	DATE	BY	Description

REVISIONS

DRAWN BY BMM & JEH
APPROVED BY DAV
CHECKED BY BJH
DATE MAY 2018

TITLE
WWPS SCHEDULES AND DETAILS

PROJECT NO. 50078863

M1.1

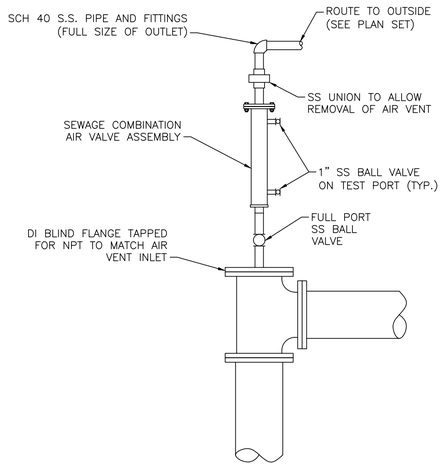

SEWAGE COMBINATION AIR VENT

N.T.S. Source: Dewberry

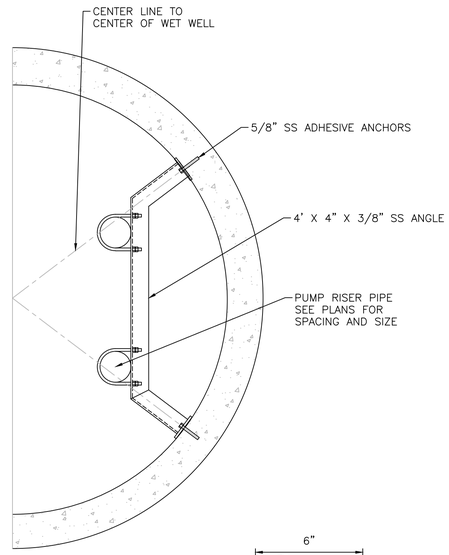

PLAN VIEW

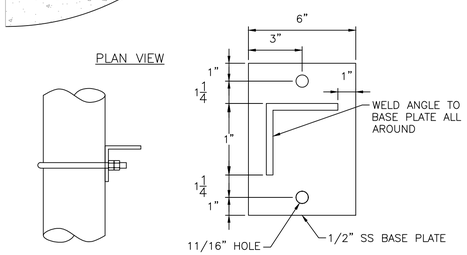

ELEVATION VIEW BASE PLATE

NOTES

1. U-BOLT TO GO THROUGH INTERMEDIATE SUPPORT AND ANGLE IRON WITH DOUBLE NUTS
2. ALL SUPPORTING HARDWARE SHALL BE STAINLESS STEEL

WET WELL RISER PIPE SUPPORT BRACKET

N.T.S. Source: Dewberry

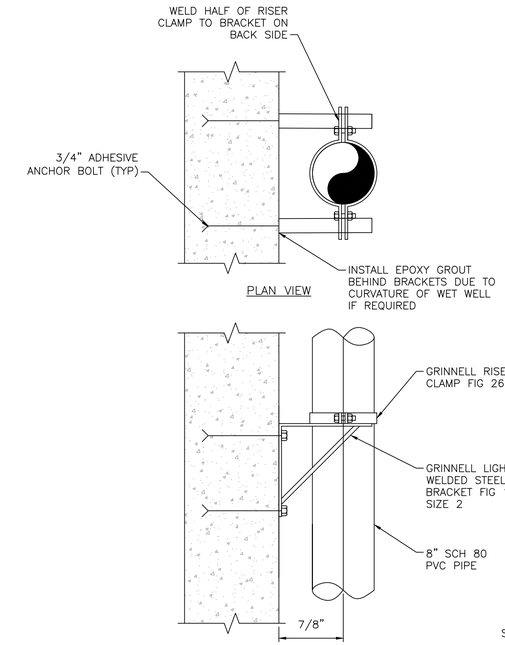

PLAN VIEW

SIDE ELEVATION

NOTES:

1. ALL BRACKETS SHALL BE 304 STAINLESS STEEL
2. GROUT AT BOTTOM SHALL BE MODIFIED TO PROVIDE A CLEAR OPENING AT BOTTOM OF STILLING WELL
3. SUPPORT BRACKETS SHALL BE INSTALLED AT BOTTOM AND AT INTERVALS NOT EXCEEDING 6 FEET

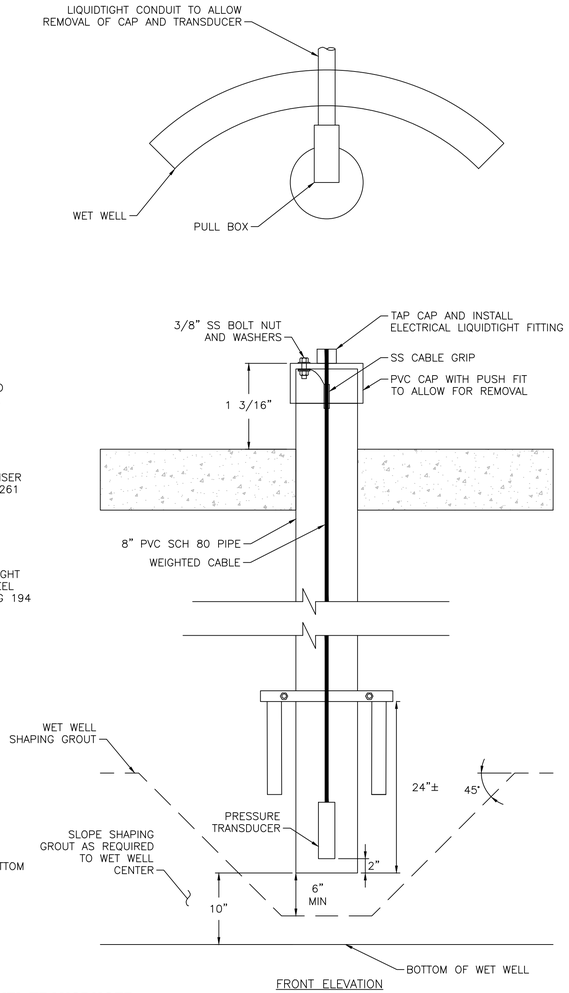

FRONT ELEVATION

SUBMERSIBLE LEVEL TRANSDUCER

N.T.S. Source: Dewberry

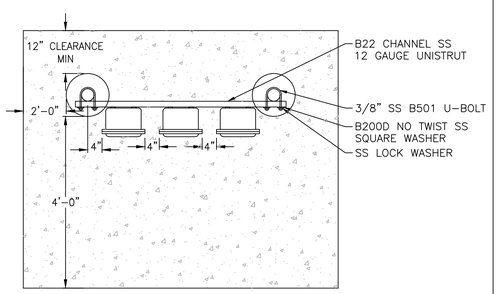

PLAN VIEW

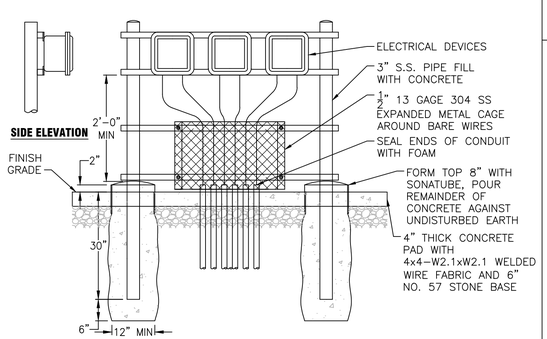

FRONT ELEVATION

ELECTRICAL JUNCTION BOX/DISCONNECT RACK

N.T.S. Source: Dewberry

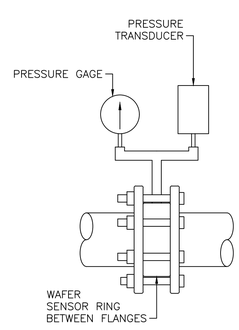

NOTES

1. *PRESSURE GAGE, AND PRESSURE SWITCH TO BE INSTALLED BY SENSOR RING MANUFACTURER*

SENSOR RING

N.T.S. Source: Dewberry

DIMENSION TABLE (IN)			
PIPE SIZE	A	B	BASE PLATE
3	2	1	3/8X6X6
4	2	1	3/8X6X6
6	2	1	3/8X6X6
8	3	1	1/2X8X8
10	3	1	1/2X8X8
12	3	1-1/4	1/2X8X8
14	4	1-1/2	1/2X8X8
16	4	1-1/2	1/2X8X8
18	6	2	1/2X10X10
20	6	2	1/2X10X10
24	6	2	1/2X10X10
30	8	3	1/2X14X14
36	8	3	1/2X14X14

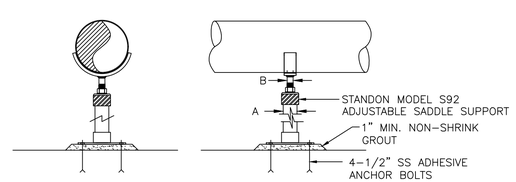

NOTES

1. *HOT DIP GALVANIZE ALL PARTS AFTER FABRICATION.*
2. *PIPE SUPPORTS SHALL BE GROUTED BEFORE INSTALLING PIPE.*

SADDLE PIPE SUPPORT

N.T.S. Source: Dewberry

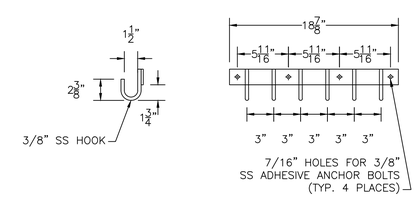

NOTES

1. ALL MATERIAL SHALL BE 316 STAINLESS STEEL.
2. CABLE RACK SHALL BE MOUNTED WITH 3/8" ADHESIVE ANCHORS.
3. ALL CABLES TO BE HUNG WITH CABLE GRIPS.

CABLE RACK

N.T.S. Source: Dewberry

Dewberry

Dewberry Engineers Inc.
4805 Lake Brook Drive, Suite 200
Glen Allen, Virginia 23060
PHONE: 804.290.7957
FAX: 804.290.7928
www.dewberry.com

ZION CROSSROADS
WATER BOOSTER PUMP STATION
AND WASTEWATER PUMP STATION

FLUVANNA COUNTY
DEPARTMENT OF PUBLIC WORKS

FLUVANNA COUNTY, VA.

KEY PLAN

SEAL

COMMONWEALTH OF VIRGINIA
GRANVILLE A. VILLHAUER
Lic. No. 046419
5/4/2018
PROFESSIONAL ENGINEER

SCALE

No.	DATE	BY	Description

REVISIONS

DRAWN BY	BMM & JEH
APPROVED BY	DAV
CHECKED BY	BJH
DATE	MAY 2018

TITLE

WWPS
DETAILS

PROJECT NO. 50078863

M1.2

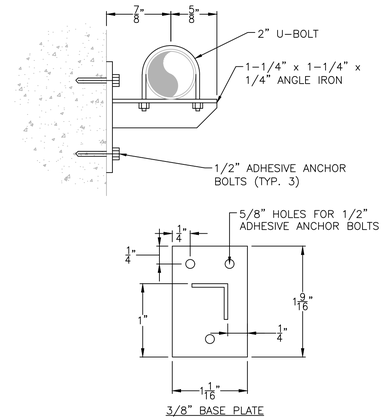

PIPE WALL SUPPORT

N.T.S. Source: Dewberry

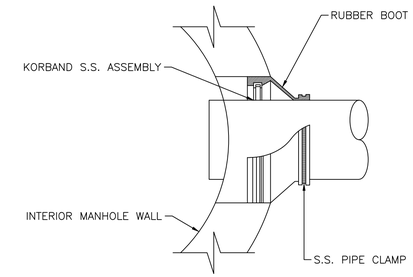

NEOPRENE BOOT

N.T.S. Source: Dewberry

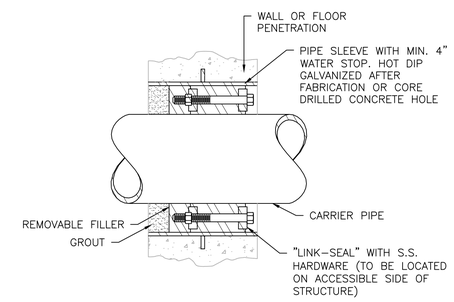

NOTES

1. HOLE SIZE AND LINK SEAL SIZE TO BE COORDINATED AS PER MANUFACTURER'S REQUIREMENTS.

LINK SEAL

N.T.S. Source: Dewberry

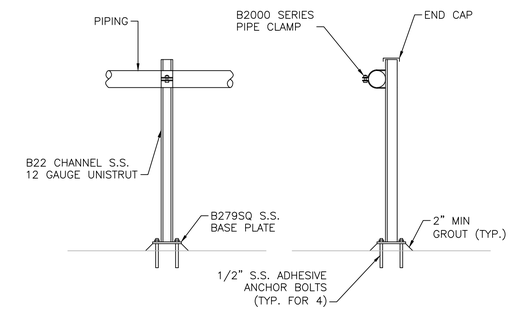

NOTES

1. *SEE PLAN AND SECTION DRAWINGS FOR PIPING SIZES*
2. *UNISTRUT, BASE PLATE, AND PIPE CLAMP FIGURE NUMBERS ARE FOR COOPER B-LINE*

PIPE SUPPORT

N.T.S. Source: Dewberry

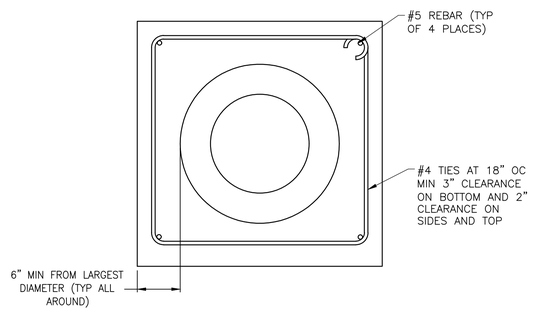

NOTES

1. CONCRETE ENCASEMENT SHALL BE PLACED AS INDICATED ON PLANS
2. CONCRETE SHALL BE 4,500 P.S.I (MIN) AT 28 DAYS IN ACCORDANCE WITH ACI-318=08
3. PIPE SHALL BE BRACED HORIZONTALLY AND VERTICALLY PRIOR TO CONCRETE POUR

PIPE ENCASEMENT DETAIL

N.T.S. Source: Dewberry

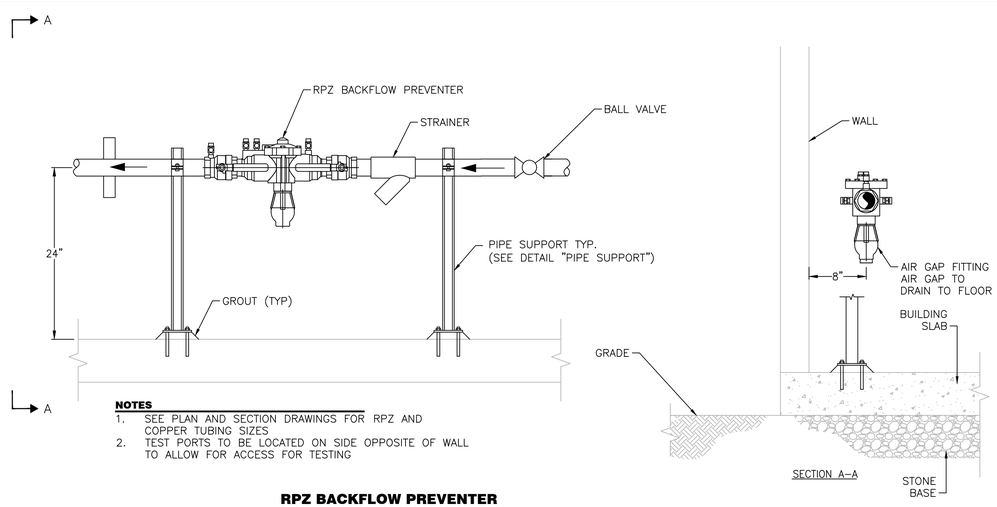

NOTES

1. SEE PLAN AND SECTION DRAWINGS FOR RPZ AND COPPER TUBING SIZES
2. TEST PORTS TO BE LOCATED ON SIDE OPPOSITE OF WALL TO ALLOW FOR ACCESS FOR TESTING

RPZ BACKFLOW PREVENTER

N.T.S. Source: Dewberry

Dewberry

Dewberry Engineers Inc.
4805 Lake Brook Drive, Suite 200
Glen Allen, Virginia 23060
PHONE: 804.290.7957
FAX: 804.290.7928
www.dewberry.com

ZION CROSSROADS
WATER BOOSTER PUMP STATION
AND WASTEWATER PUMP STATION

FLUVANNA COUNTY
DEPARTMENT OF PUBLIC WORKS

FLUVANNA COUNTY, VA.

KEY PLAN

SEAL

COMMONWEALTH OF VIRGINIA
DANYLO A. VILLIHAUER
Lic. No. 046419
5/4/2018
PROFESSIONAL ENGINEER

SCALE

No.	DATE	BY	Description

REVISIONS

DRAWN BY	BMM & JEH
APPROVED BY	DAV
CHECKED BY	BJH
DATE	MAY 2018

TITLE

WWPS
DETAILS

PROJECT NO. 50078863

M1.3

GENERAL STRUCTURAL NOTES

GENERAL:

1. THE GENERAL STRUCTURAL NOTES ARE INTENDED TO AUGMENT THE DRAWINGS AND SPECIFICATIONS. SHOULD CONFLICTS EXIST BETWEEN THE DRAWINGS, SPECIFICATIONS, AND GENERAL STRUCTURAL NOTES, THE STRICTEST PROVISION SHALL GOVERN.

2. UNLESS NOTED OTHERWISE, CONSTRUCTION MEANS AND METHODS SHALL BE SOLELY THE RESPONSIBILITY OF THE CONTRACTOR.

3. CONTRACTOR SHALL NOT SCALE DIMENSIONS FROM THE DRAWINGS.

DESIGN:

1. STRUCTURAL DESIGN CONFORMS TO THE REQUIREMENTS OF THE VIRGINIA UNIFORM STATEWIDE BUILDING CODE, 2012 EDITION (IBC 2012 WITH VIRGINIA AMENDMENTS).

2. BUILDING DESIGN LOADS AND DESIGN DATA FOR NEW CONSTRUCTION ARE AS FOLLOWS:

   A. FLOOR LIVE LOADS:

SLAB-ON-GRADE	200 PSF
GENERATOR PAD	250 PSF
GENERATOR ACCESS PLATFORM	60 PSF

   B. MINIMUM ROOF LIVE LOAD: 20 PSF

   C. ROOF SNOW LOAD:

GROUND SNOW LOAD (Pg)	30 PSF
SNOW EXPOSURE FACTOR (Ce)	1.0
SNOW LOAD IMPORTANCE FACTOR (I)	1.1
THERMAL FACTOR (Ct)	1.0
FLAT ROOF SNOW LOAD (Pf)	23.1 PSF

   D. WIND LOAD:

BASIC WIND SPEED (3 SECOND GUST)	120 MPH
BUILDING RISK CATEGORY	3
WIND EXPOSURE CATEGORY	B
INTERNAL PRESSURE COEFFICIENT	±0.18

   E. SEISMIC DESIGN DATA:

BUILDING RISK CATEGORY	3
SEISMIC IMPORTANCE FACTOR	1.25
MAPPED SPECTRAL RESPONSE ACCELERATIONS, S_S	0.224
MAPPED SPECTRAL RESPONSE ACCELERATIONS, S_1	0.069
SPECTRAL RESPONSE COEFF. S_{DS}	0.238
SPECTRAL RESPONSE COEFF. S_{D1}	0.110
SITE CLASS (PER GEOTECH REPORT)	D
SEISMIC DESIGN CATEGORY	B
SEISMIC-FORCE-RESISTING SYSTEM	BY PRECAST BUILDING MANUFACTURER

FOUNDATIONS:

1. FOUNDATION DESIGN IS BASED ON A GEOTECHNICAL ENGINEERING REPORT PREPARED BY SCHNABEL ENGINEERING DATED MARCH 23, 2017 (SCHNABEL PROJECT NUMBER 16C13175 TASK 3).

2. THE STRUCTURAL ENGINEER OF RECORD IS NOT RESPONSIBLE FOR SUBSURFACE CONDITIONS ENCOUNTERED IN THE FIELD CONTRARY TO THOSE ASSUMED FOR DESIGN.

3. FOUNDATION BEARING PRESSURE USED IN DESIGN (POUNDS PER SQUARE FOOT):

   WALL FOOTINGS 3,000 PSF

4. ALL COMPACTED FILL, EXCAVATIONS, AND SUBGRADES SHALL BE OBSERVED AND TESTED BY A GEOTECHNICAL ENGINEER REGISTERED IN THE COMMONWEALTH OF VIRGINIA (OR A QUALIFIED GEOTECHNICAL TECHNICIAN WORKING UNDER THE DIRECT SUPERVISION OF A REGISTERED ENGINEER) TO VERIFY SPECIFIED GEOTECHNICAL CONFORMANCE REQUIREMENTS. CONTRACTOR SHALL COORDINATE TESTING WITH OWNER AS DECLARED IN THE CONTRACT DOCUMENTS.

5. AFTER STRIPPING TOPSOIL, THE SUBGRADES SHALL BE PROOFROOLLED WITH A LOADED TANDEM AXLE DUMP TRUCK HAVING A WEIGHT OF AT LEAST 20 TONS TO AND EVALUATED BY THE PROJECT GEOTECHNICAL ENGINEER TO DETERMINE THEIR SUITABILITY FOR SUPPORTING LOADS. PROOFROLLING SHALL BE LIMITED TO PERIODS OF GOOD WEATHER AND NOT WHILE THE PROJECT SITE IS WET, FROZEN, OR SEVERELY DESICCATED. SUBGRADES WHICH EXHIBIT EXCESSIVE PUMPING, WEAVING, OR RUTTING SHALL BE SCARIFIED, DRIED, AND RECOMPACATED, OR UNDERCUT AND REPLACED WITH COMPACTED STRUCTURAL FILL AS DIRECTED BY THE PROJECT GEOTECHNICAL ENGINEER.

6. COMPACTED ENGINEERED FILL SHALL BE AS FOLLOWS:

   A. ON-SITE SOILS APPROVED BY THE PROJECT GEOTECHNICAL ENGINEER.
   B. B. OFF-SITE SOILS HAVING A CLASSIFICATION OF CL, ML, SC, SM, SP, SW, GC, GM, GP, OR GW PER ASTM D-2487 AND APPROVED BY THE PROJECT GEOTECHNICAL ENGINEER.
   C. PLACED IN LOOSE LIFTS NOT EXCEEDING 8 INCHES IN THICKNESS.
   D. COMPACTED TO AT LEAST 95 PERCENT OF MAXIMUM DRY DENSITY PER ASTM D-698.
   E. MOISTURE CONTENT ±3 PERCENT OF OPTIMUM.
   F. FREE OF BOULDERS, ORGANICS, TRASH, PARTICLES OF 3 INCHES OR MORE IN DIAMETER, AND OTHER DELETERIOUS MATERIALS.

7. DURING FILLING AND BACKFILLING, DENSITY TESTING SHALL BE MADE IN ACCORDANCE WITH ASTM D-1556 (OR EQUIVALENT) TO MONITOR COMPACTION LEVELS AND MOISTURE CONTENTS. FREQUENCY OF DENSITY TESTING SHALL BE AS DIRECTED BY GEOTECHNICAL ENGINEER TO VERIFY SPECIFIED COMPACTION AND MOISTURE CONTENT REQUIREMENTS.

8. CARE SHALL BE EXERCISED DURING EXCAVATION FOR FOUNDATIONS SO THAT AS LITTLE DISTURBANCE AS POSSIBLE OCCURS AT THE FOUNDATION LEVEL. LOOSE OR SOFT SOILS SHALL BE CAREFULLY CLEANED FROM THE BOTTOM OF THE EXCAVATIONS BEFORE PLACING CONCRETE. ACTUAL FOUNDATION SUBGRADES SHALL BE OBSERVED DURING CONSTRUCTION BY THE GEOTECHNICAL ENGINEER TO EVALUATE WHETHER SUITABILITY OF SUBGRADE SOILS.

9. UNLESS NOTED OTHERWISE, FOUNDATION SUBGRADES REQUIRING UNDERCUT SHALL BE FILLED FROM THE ELEVATION OF UNDERCUT TO THE ORIGINAL DESIGN SUBGRADE ELEVATION WITH LEAN CONCRETE, MINIMUM 500 PSI FLOWABLE FILL.

10. WHENEVER POSSIBLE, FOUNDATION CONCRETE SHALL BE PLACED IMMEDIATELY AFTER EXCAVATION SO THAT ACCUMULATION OF WATER IN THE EXCAVATION OR DRYING OF FOUNDATION SOILS CAN BE AVOIDED.

11. CONTRACTOR SHALL CONTROL SITE GROUNDWATER AND/OR SURFACE WATER BY ALL MEANS NECESSARY TO MAINTAIN A WATER LEVEL ONE FOOT BELOW SLAB SUBGRADE SO AS TO NOT DAMAGE FOUNDATION EXCAVATIONS.

12. ANY SUBGRADE SOILS WHICH HAVE BEEN WEAKENED DUE TO SATURATION OR DISTURBANCE SHALL BE RECOMPACTED OR REMOVED AND REPLACED WITH STRUCTURAL FILL AS DIRECTED BY THE GEOTECHNICAL ENGINEER. CONCRETE STRUCTURES SHALL BE CONSTRUCTED IN AN EXPEDIENT MANNER ONCE EXCAVATIONS ARE MADE TO AVOID WEATHER DAMAGE.

REINFORCED CONCRETE:

1. UNLESS NOTED OTHERWISE, ALL CONCRETE WORK, DETAILING, FABRICATION, AND PLACING OF REINFORCING AND CONCRETE SHALL BE GOVERNED BY THE LATEST REVISIONS OF:

   A. ACI 301, ACI 315, AND ACI 318.
   B. CRSI RECOMMENDED PRACTICE OF PLACING REINFORCING BARS.
   C. ACI 306 AND ACI 305 FOR COLD AND HOT WEATHER CONCRETING, RESPECTIVELY.

2. ALL CONCRETE SHALL BE NORMAL WEIGHT WITH A MAXIMUM UNIT WEIGHT OF 150 POUNDS PER CUBIC FOOT AND SHALL HAVE A MINIMUM 28 DAY COMPRESSIVE STRENGTH, AS SPECIFIED BELOW, FOR THE RESPECTIVE AREAS:

FOOTINGS	4,000 PSI
INTERIOR SLAB-ON-GRADE	4,000 PSI
EXTERIOR PADS AND PAVEMENT	4,500 PSI

3. PROVIDE A 3/4" CHAMFER AT ALL EXPOSED CONCRETE CORNERS.

4. REINFORCING STEEL SHALL CONFORM TO ASTM A 615, AND SHALL BE GRADE 60 U.N.O.

5. WELDED WIRE FABRIC SHALL BE NEW BILLET STEEL, COLD DRAWN CONFORMING TO ASTM SPECIFICATIONS A 185 AND A 82 AND SHALL BE PROVIDED IN FLAT SHEETS.

6. REINFORCING BAR LAP SPLICES AND HOOK DIMENSIONS SHALL BE AS REQUIRED PER THE SCHEDULE ON THIS SHEET UNLESS NOTED OTHERWISE.

7. WHERE SLEEVES ARE SHOWN, CONTRACTOR SHALL SLIGHTLY ADJUST STEEL LOCATION AROUND SLEEVE AS MUCH AS PRACTICABLE. STEEL SHALL NOT BE CUT UNLESS SHOWN OTHERWISE ON THE DRAWINGS, OR UNLESS AGREED TO BY THE ENGINEER ON A CASE BY CASE BASIS.

WOOD FRAMING:

1. THE FOLLOWING SHALL APPLY FOR WOOD FRAMED CONSTRUCTION:

   A. ALL WOOD FRAMING SHALL BE SOUTHERN YELLOW PINE MINIMUM GRADE NUMBER 2, UNLESS NOTED OTHERWISE.
   B. WOOD MEMBERS SHALL HAVE MAXIMUM MOISTURE CONTENT OF 19 PERCENT.
   C. ALL PLYWOOD SHALL BE APA-RATED AS INDICATED ON DRAWINGS.
   D. ALL BOLTS USED FOR WOOD FASTENING SHALL CONFORM TO ASTM A307, LOW-CARBON STEEL WITH EXTERNALLY AND INTERNALLY THREADED FASTENERS, U.N.O.
   E. STEEL CONNECTOR PLATES SHALL CONFORM TO ASTM 36.
   F. LAG SCREWS SHALL CONFORM TO ANSI/ASME STANDARD B18.2.1
   G. NAILING SHALL BE IN ACCORDANCE WITH TABLE 2304.9.1 OF THE IBC 2012 CODE.
   H. WEATHER EXPOSED WOOD AND WOOD IN CONTACT WITH CONCRETE OR MASONRY SHALL BE PRESSURE TREATED.

COORDINATION:

1. STRUCTURAL DRAWINGS SHALL BE USED IN CONJUNCTION WITH, AND COORDINATED WITH CIVIL, MECHANICAL, ELECTRICAL, AND OTHER CONTRACT DOCUMENTS.

2. COORDINATE THE EXACT SIZE AND LOCATION OF ALL SLEEVES AND OPENINGS THROUGH CONCRETE SLABS AND CONCRETE WALLS WITH CIVIL, MECHANICAL, AND ELECTRICAL DRAWINGS. SLEEVES SHALL BE ASTM A 53 SCHEDULE 40 STEEL WITH A DIAMETER NOT GREATER THAN 12 INCHES AND SHALL BE GALVANIZED AFTER CUTTING.

STRUCTURAL ABBREVIATION LIST

A.F.F.	ABOVE FINISHED FLOOR	KSI	KIPS PER SQUARE INCH
ARCH.	ARCHITECTURAL	LLH	LONG LEG HORIZONTAL
B.S.	BOTH SIDES	LLV	LONG LEG VERTICAL
BOT.	BOTTOM	MAX.	MAXIMUM
CF	CUBIC FOOT	MECH.	MECHANICAL
CMU	CONCRETE MASONRY UNIT	MIN.	MINIMUM
CLR.	CLEAR	M.O.	MASONRY OPENING
COL.	COLUMN	MPH	MILES PER HOUR
CONC.	CONCRETE	N.T.S.	NOT TO SCALE
CONT.	CONTINUOUS	NO.	NUMBER
DET.	DETAIL	#	NUMBER
DIA.	DIAMETER	O.C.	ON CENTER
DIM.	DIMENSION	PSI	POUNDS PER SQUARE INCH
EA.	EACH	PSF	POUNDS PER SQUARE FOOT
ELEV.	ELEVATION	R	RADIUS
E.O.S.	EDGE OF SLAB	REINF.	REINFORCING
EQ..	EQUAL	REQ'D	REQUIRED
EXTG.	EXISTING	RTU	ROOF TOP UNIT
EXP.	EXPANSION	SIM	SIMILAR
EXT.	EXTERIOR	STD.	STANDARD
FIN.	FINISH	STRU.	STRUCTURAL
FTG.	FOOTING	T.O.S.	TOP OF STEEL
GALV.	GALVANIZED	TYP.	TYPICAL
GA.	GAUGE	U.N.O.	UNLESS NOTED OTHERWISE
HSS	HOLLOW STRUCTURAL SECTION	V.I.F.	VERIFY IN FIELD
HORIZ.	HORIZONTAL	VERT.	VERTICAL
INT	INTERIOR	W.W.F.	WELDED WIRE FABRIC

REBAR SPLICE AND HOOK SCHEDULE

REBAR SPLICE AND HOOK DIMENSIONS IN REINF. CONCRETE

F'c = 4,000 AND 4,500 PSI

ASTM BAR SIZE	LD	CLASS B LAP	TOP BAR LAP	LDH
3	12"	12"	16"	7-1/2"
4	12"	15"	20"	9-1/2"
5	15"	19"	24"	12"
6	17"	23"	29"	14-1/2"
7	25"	33"	43"	17"

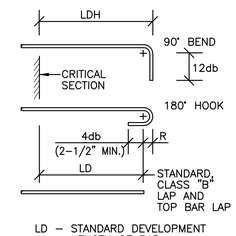

NOTES:

TOP BAR – DEFINED AS A BAR LOCATED SUCH THAT 12 IN. OR MORE OF FRESH CONCRETE IS CAST IN THE MEMBER BELOW THE SPLICE.

MINIMUM OUTSIDE RADIUS OF BEND, R, SHALL BE 4db.

LD – STANDARD DEVELOPMENT LENGTH OF BAR

LDH – STANDARD DEVELOPMENT LENGTH OF HOOK

F'c – SPECIFIED COMPRESSIVE STRENGTH OF CONCRETE

db – BAR DIAMETER PER ASTM

BOS 2019-01-09 p.1422/1491

Dewberry

Dewberry Engineers Inc.
4805 Lake Brook Drive, Suite 200
Glen Allen, Virginia 23060
PHONE: 804.290.7957
FAX: 804.290.7928
www.dewberry.com

ZION CROSSROADS
WATER BOOSTER PUMP STATION
AND WASTEWATER PUMP STATION
FLUVANNA COUNTY
DEPARTMENT OF PUBLIC WORKS
FLUVANNA COUNTY, VA

KEY PLAN

SEAL

COMMONWEALTH OF VIRGINIA
JOSEPH ALLEN WOLHAR
Lic. No. 035964
5-4-2018
PROFESSIONAL ENGINEER

SCALE

No.	DATE	BY	Description

REVISIONS

DRAWN BY	STAFF
APPROVED BY	JAW
CHECKED BY	MKM
DATE	MAY 2018

TITLE

WWPS
GENERAL
STRUCTURAL
NOTES

PROJECT NO. 50078863

S1.0

BOS 2019-01-09 p.1423/1491

LINTEL SCHEDULE

UNLESS OTHERWISE NOTED ON THE DRAWINGS, USE THE FOLLOWING SCHEDULE FOR LINTELS AND HEADERS IN NEW MASONRY CONSTRUCTION.

1. OPENINGS FOR ROUND DUCTS, PIPING, AND ELEC. CONDUIT ARE NOT SHOWN. SLEEVE OPENINGS BETWEEN 4 AND 12 INCHES IN DIAMETER WITH SCHEDULE 40 STEEL PIPE PER THE COORDINATION SECTION OF THE GENERAL NOTES.
2. MINIMUM BEARING FOR MASONRY LINTELS IS 8". FILL CMU CELLS BELOW BEARING WITH 3,000 PSI GROUT AND REINFORCE PER CMU WALL SCHEDULE.

8" CMU WALLS

1. FOR CLEAR SPANS LESS THAN 4'-0", PROVIDE AN 8" DEEP BOND BEAM LINTEL WITH (2) #4 BARS TOP AND BOTTOM.

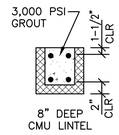

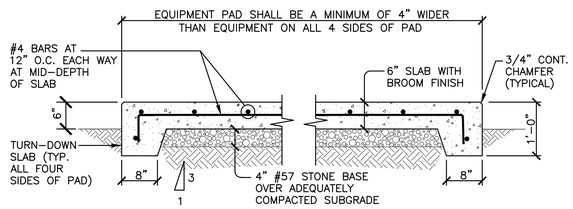

6 / S1.1 EXTERIOR EQUIPMENT PAD DETAIL
SCALE: 3/4" = 1'-0"

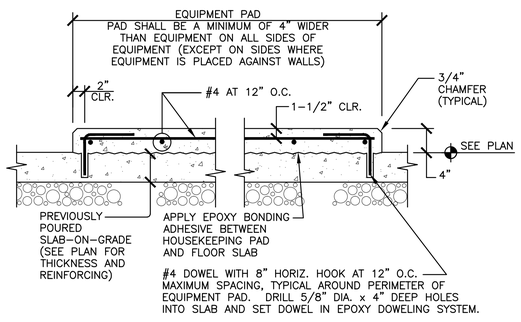

5 / S1.1 INTERIOR EQUIPMENT PAD DETAIL
SCALE: NOT TO SCALE

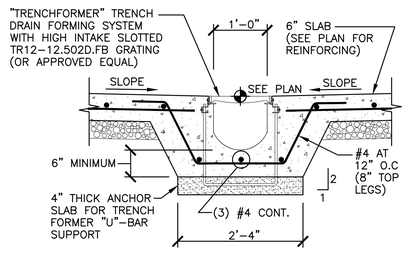

4 / S1.1 TRENCH DRAIN DETAIL
SCALE: 3/4" = 1'-0"

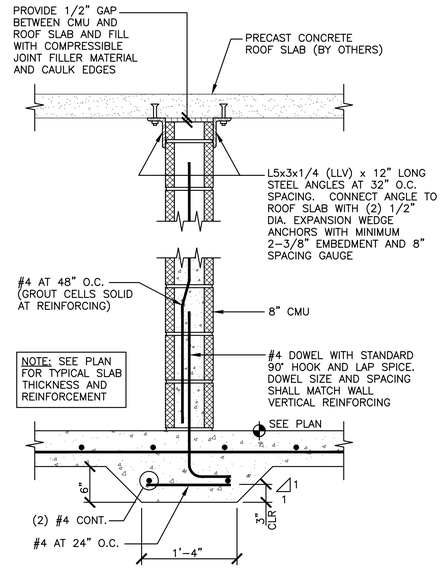

3 / S1.1 INTERIOR CMU WALL DETAIL
SCALE: 1" = 1'-0"

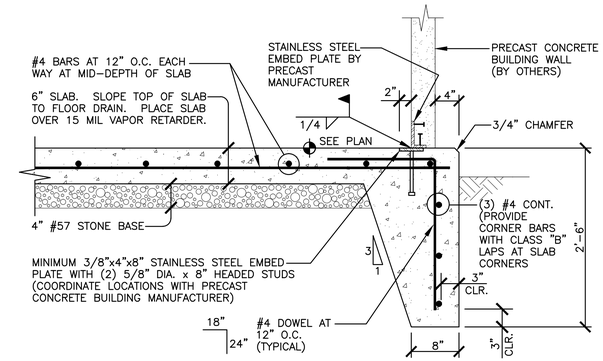

2 / S1.1 PRECAST BUILDING - TURNED DOWN SLAB
SCALE: 1" = 1'-0"

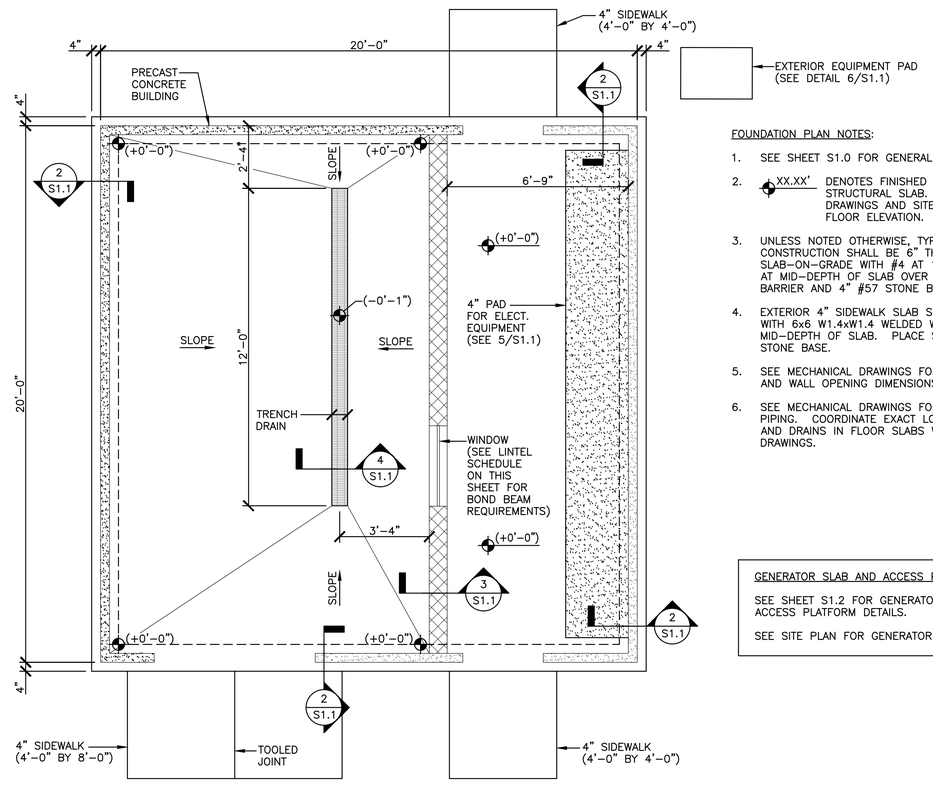

1 / S1.1 WWPS FOUNDATION PLAN
SCALE: 3/8" = 1'-0"

FOUNDATION PLAN NOTES:

1. SEE SHEET S1.0 FOR GENERAL STRUCTURAL NOTES.
2. XX.XX' DENOTES FINISHED FLOOR ELEVATION OF STRUCTURAL SLAB. SEE MECHANICAL DRAWINGS AND SITE PLAN FOR EXACT FLOOR ELEVATION.
3. UNLESS NOTED OTHERWISE, TYPICAL FLOOR CONSTRUCTION SHALL BE 6" THICK CONCRETE SLAB-ON-GRADE WITH #4 AT 12" O.C. EACH WAY AT MID-DEPTH OF SLAB OVER 15 MIL VAPOR BARRIER AND 4" #57 STONE BASE.
4. EXTERIOR 4" SIDEWALK SLAB SHALL BE REINFORCED WITH 6x6 W1.4xW1.4 WELDED WIRE FABRIC AT MID-DEPTH OF SLAB. PLACE SLAB OVER 4" #57 STONE BASE.
5. SEE MECHANICAL DRAWINGS FOR WALL DIMENSIONS AND WALL OPENING DIMENSIONS.
6. SEE MECHANICAL DRAWINGS FOR FLOOR DRAINS AND PIPING. COORDINATE EXACT LOCATIONS OF SLOPES AND DRAINS IN FLOOR SLABS WITH MECHANICAL DRAWINGS.

GENERATOR SLAB AND ACCESS PLATFORM

SEE SHEET S1.2 FOR GENERATOR SLAB AND ACCESS PLATFORM DETAILS.

SEE SITE PLAN FOR GENERATOR LOCATION.

Dewberry

Dewberry Engineers Inc.
4805 Lake Brook Drive, Suite 200
Glen Allen, Virginia 23060
PHONE: 804.290.7957
FAX: 804.290.7928
www.dewberry.com

ZION CROSSROADS
WATER BOOSTER PUMP STATION
AND WASTEWATER PUMP STATION
FLUVANNA COUNTY
DEPARTMENT OF PUBLIC WORKS
FLUVANNA COUNTY, VA

KEY PLAN

SEAL
COMMONWEALTH OF VIRGINIA
JOSEPH ALLEN WOLHAR
Lic. No. 035964
5-4-2018
PROFESSIONAL ENGINEER

SCALE

No.	DATE	BY	Description

REVISIONS

DRAWN BY	STAFF
APPROVED BY	JAW
CHECKED BY	MKM
DATE	MAY 2018

TITLE

WWPS
FOUNDATION PLAN

PROJECT NO. 50078863

S1.1

BOS 2019-01-09 p.1424/1491

Dewberry

Dewberry Engineers Inc.
4805 Lake Brook Drive, Suite 200
Glen Allen, Virginia 23060
PHONE: 804.290.7957
FAX: 804.290.7928
www.dewberry.com

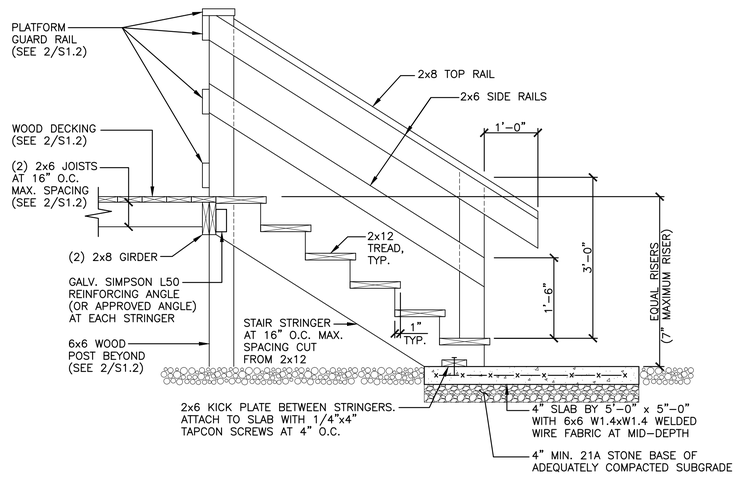

3 / S1.2 GENERATOR PLATFORM STAIR SECTION
SCALE: 3/4" = 1'-0"

NOTES:

1. ALL FASTENERS, POST BASES, AND POST CAPS SHALL BE GALVANIZED OR STAINLESS STEEL.
2. ALL SAWN LUMBER SHALL BE PRESSURE TREATED.

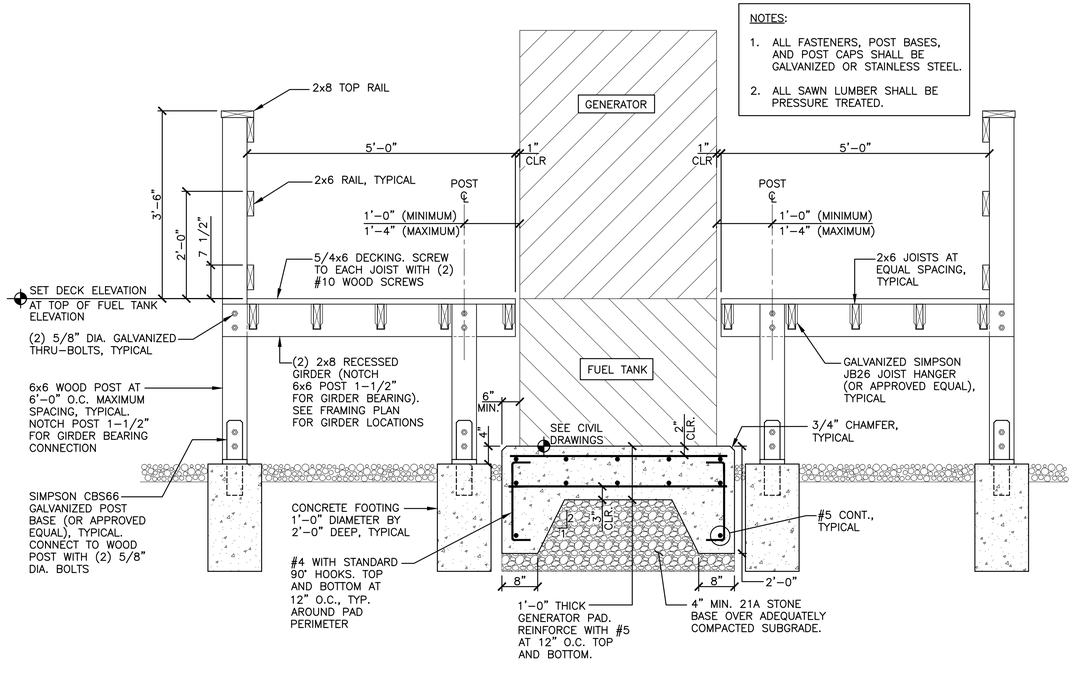

2 / S1.2 GENERATOR PAD AND PLATFORM SECTION
SCALE: 3/4" = 1'-0"

GENERATOR ACCESS PLATFORM FRAMING PLAN NOTES

1. SEE S1.0 FOR GENERAL STRUCTURAL NOTES.
2. SEE SITE PLANS FOR LOCATION OF GENERATOR ON SITE.
3. STAIR LOCATION SHOWN IS SCHEMATIC. COORDINATE ACTUAL LOCATION WITH SITE PLAN.
4. ALL SAWN LUMBER SHALL BE PRESSURE TREATED, SOUTHERN PINE NO. 2 OR BETTER.
5. ALL FASTENERS AND POST BASES SHALL BE GALVANIZED OR STAINLESS STEEL.
6. - - - - - - - DENOTES (2) 2x6 X-BRACING BETWEEN POSTS. CONNECT BRACES TO POST FACE WITH (1) 5/8" DIA. THRU-BOLT.

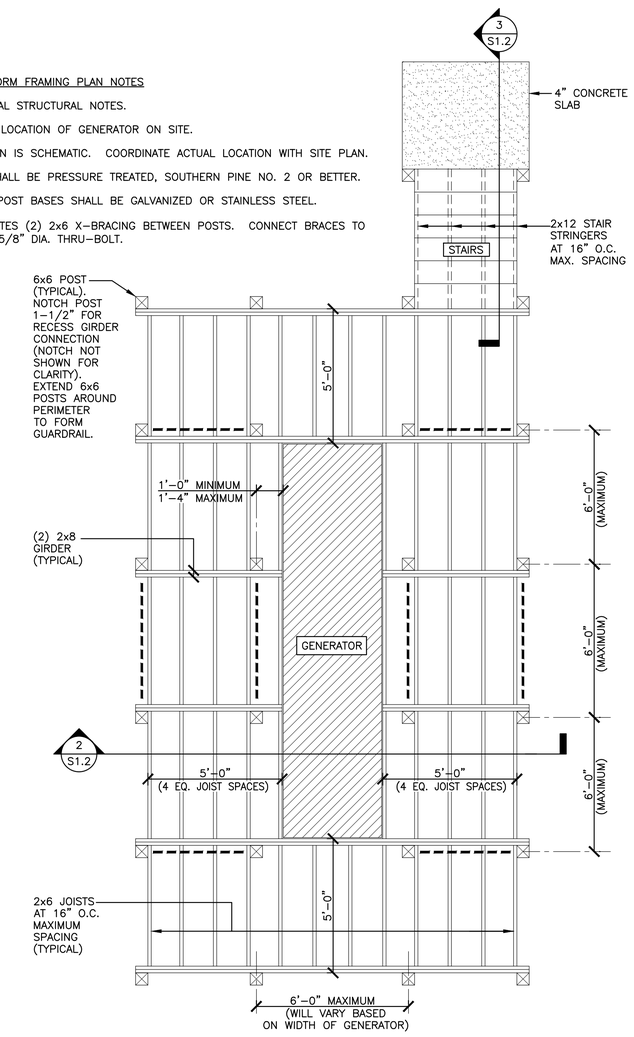

1 / S1.2 GENERATOR PLATFORM FRAMING PLAN
SCALE: 3/8" = 1'-0"

ZION CROSSROADS
WATER BOOSTER PUMP STATION
AND WASTEWATER PUMP STATION
FLUVANNA COUNTY
DEPARTMENT OF PUBLIC WORKS
FLUVANNA COUNTY, VA

KEY PLAN

SEAL

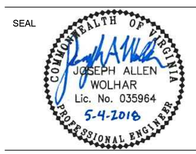

SCALE

No.	DATE	BY	Description

REVISIONS

DRAWN BY	STAFF
APPROVED BY	JAW
CHECKED BY	MKM
DATE	MAY 2018

TITLE

WWPS
GENERATOR PAD
AND PLATFORM
DETAILS

PROJECT NO. 50078863

S1.2

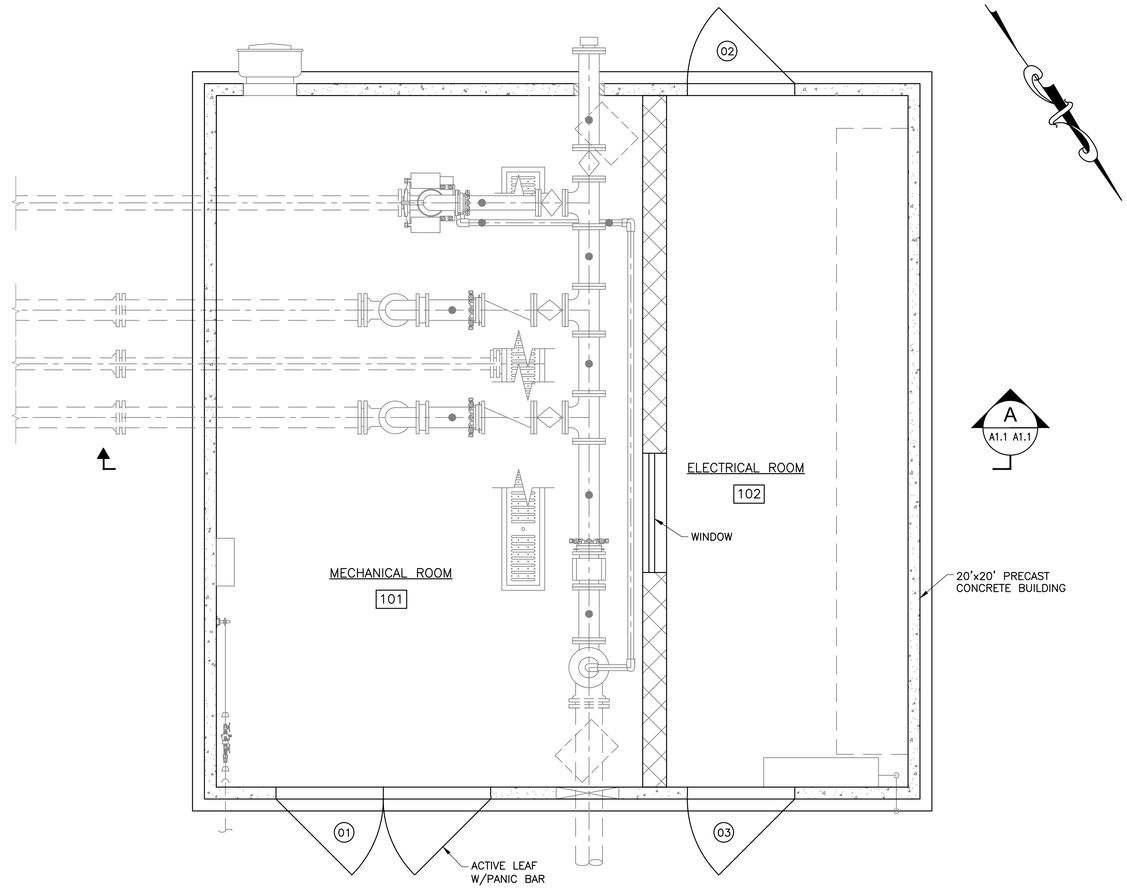

WASTEWATER PUMP STATION PLAN

SCALE: 1/2" = 1'-0"

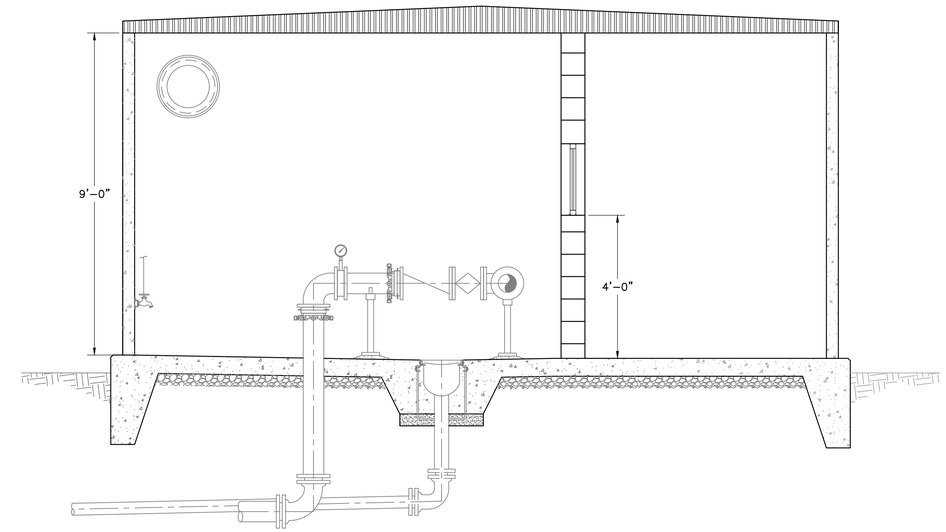

A A1.1 A1.1 WASTEWATER PUMP STATION SECTION

SCALE: 1/2"=1'-0"

WWPS SIGNAGE SCHEDULE				
LOCATION		SIGNAGE	TYPE	REMARKS
DOOR 01	EXT	WWPS MECHANICAL ROOM	EXTERIOR USE, ENGRAVED, 1-INCH WHITE TEXT, BLACK PLATE	
DOOR 02	EXT	WWPS ELECTRICAL ROOM	EXTERIOR USE, ENGRAVED, 1-INCH WHITE TEXT, BLACK PLATE	
DOOR 03	EXT	WWPS ELECTRICAL ROOM	EXTERIOR USE, ENGRAVED, 1-INCH WHITE TEXT, BLACK PLATE	
RM 101	UH-1	UH-1	EXTERIOR USE, ENGRAVED, 1/2-INCH WHITE TEXT, BLACK PLATE	MOUNT ON WALL OR UNIT
	UH-2	UH-2	EXTERIOR USE, ENGRAVED, 1/2-INCH WHITE TEXT, BLACK PLATE	MOUNT ON WALL OR UNIT
	FAN	EF-1	EXTERIOR USE, ENGRAVED, 1/2-INCH WHITE TEXT, BLACK PLATE	MOUNT ON WALL OR UNIT
	L-1	L-1	EXTERIOR USE, ENGRAVED, 1/2-INCH WHITE TEXT, BLACK PLATE	MOUNT ON WALL OR UNIT
RM 102	DMSS1	DMSS-1	EXTERIOR USE, ENGRAVED, 1/2-INCH WHITE TEXT, BLACK PLATE	MOUNT ON WALL OR UNIT
BLDG EXTERIOR		EMERGENCY BYPASS CONNECTION	EXTERIOR USE, ENGRAVED, 1-INCH WHITE TEXT, BLACK PLATE	MOUNT OUTSIDE ON WALL ABOVE EMERGENCY BYPASS
	CU1	CU-1	EXTERIOR USE, ENGRAVED, 1-INCH WHITE TEXT, BLACK PLATE	MOUNT ON UNIT
WET WELL	HATCH	DANGER: PERMIT REQUIRED CONFINED SPACE DO NOT ENTER	PER SPECIFICATIONS	MOUNT PER HATCH MFR RECOMMENDATION
	HATCH	P-1	EXTERIOR USE, ENGRAVED, 1/2-INCH WHITE TEXT, BLACK PLATE	MOUNT ABOVE PUMP 1 PER HATCH MFR RECOMMENDATION
	HATCH	P-2	EXTERIOR USE, ENGRAVED, 1/2-INCH WHITE TEXT, BLACK PLATE	MOUNT ABOVE PUMP 2 PER HATCH MFR RECOMMENDATION

NOTES:
1. ALL SIGNS SHALL BE MOUNTED WITH 316SS SCREWS UNLESS OTHERWISE NOTED.
2. COORDINATE WITH ENGINEER LOCATION OF SIGNS.
3. ELECTRICAL LABELING PER ELECTRICAL SPECIFICATIONS.

ROOM FINISH SCHEDULE														
ROOM		FLOOR	WALLS								CEILING			REMARKS
			NORTH		EAST		SOUTH		WEST					
NUMBER	NAME		MATERIAL	FINISH	MATERIAL	FINISH	MATERIAL	FINISH	MATERIAL	FINISH	MATERIAL	FINISH	HEIGHT	
101	MECHANICAL ROOM	SLD. CONC.	CONC.	EP. PT.	CONC.	EP. PT.	CONC.	EP. PT.	CMU	EP. PT.	CONC.	EP. PT.	9'-0"	
102	ELECTRICAL ROOM	SLD. CONC.	CONC.	EP. PT.	CMU	EP. PT.	CONC.	EP. PT.	CONC	EP. PT.	CONC.	EP. PT.	9'-0"	

ABBREVIATIONS LEGEND	
EXIST.	EXISTING
FLR	FLOOR
GWB	WALL BOARD
UNO.	UNLESS NOTED OTHERWISE
THICK	THICKNESS
EP. PT.	EPOXY PAINT
MR GWB	MOLD AND MOISTURE RESISTANT GYPSUM WALL BOARD
SLD. CONC.	TROWEL FINISHED SEALED CONCRETE
CONC.	CONCRETE
C.B.	CEMENT BOARD

NOTES:
1. SEE SPECIFICATIONS FOR PAINT DETAILS

DOOR SCHEDULE														
NUMBER		DOOR							FRAME				HDW	REMARKS
DOOR #	ROOM #	ROOM NAME	WIDTH	HEIGHT	THICK	MATERIAL	FINISH	TYPE	MATERIAL	HEAD	JAMB	TYPE	SET #	NOTES
01	101	MECHANICAL ROOM	6'-0"	6'-8"	1 3/4"	HM	PAINT	B	HM	H1	J1	2	04	
02	102	ELECTRICAL ROOM	3'-0"	6'-8"	1 3/4"	HM	PAINT	A	HM	H1	J1	1	01	
03	102	ELECTRICAL ROOM	3'-0"	6'-8"	1 3/4"	HM	PAINT	A	HM	H1	J1	1	01	

BOS 2019-01-09 p.1425/1491

Dewberry

Dewberry Engineers Inc.
4805 Lake Brook Drive, Suite 200
Glen Allen, Virginia 23060
PHONE: 804.290.7957
FAX: 804.290.7928
www.dewberry.com

ZION CROSSROADS
WATER BOOSTER PUMP STATION
AND WASTEWATER PUMP STATION
FLUVANNA COUNTY
DEPARTMENT OF PUBLIC WORKS
FLUVANNA COUNTY, VA

KEY PLAN

SEAL

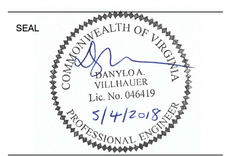

SCALE

No.	DATE	BY	Description

REVISIONS

DRAWN BY BMM & JEH
APPROVED BY DAV
CHECKED BY BJH
DATE MAY 2018

TITLE

WWPS
LAYOUT

PROJECT NO. 50078863

A1.0

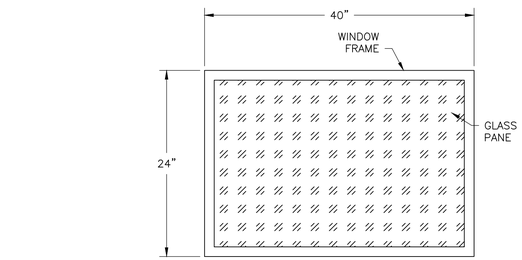

FRONT ELEVATION

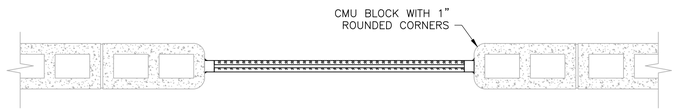

PLAN VIEW

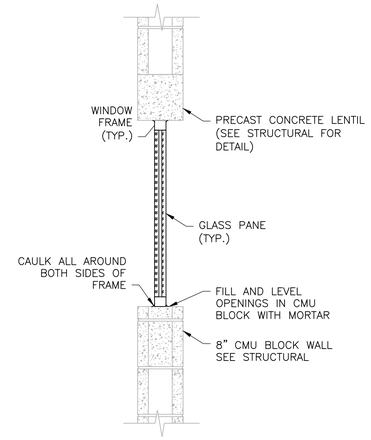

SIDE ELEVATION

WINDOW HEAD AND JAMB DETAILS

SCALE: NOT TO SCALE

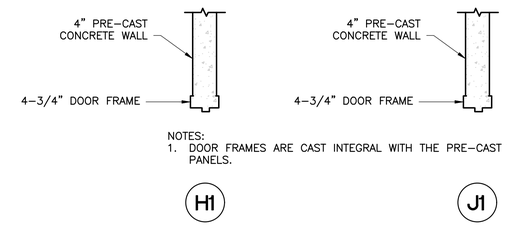

NOTES:
1. DOOR FRAMES ARE CAST INTEGRAL WITH THE PRE-CAST WALL PANELS.

DOOR HEAD AND JAMB DETAILS

SCALE: NOT TO SCALE

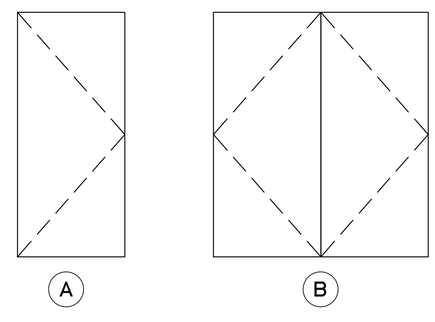

DOOR TYPE ELE□ATIONS

SCALE: NOT TO SCALE

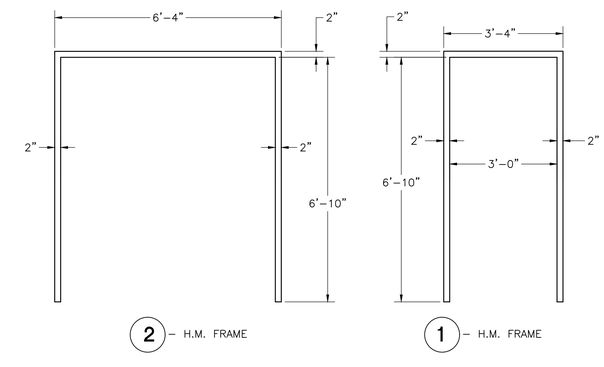

DOOR FRAME ELE□ATIONS

SCALE: NOT TO SCALE

Dewberry

Dewberry Engineers Inc.
4805 Lake Brook Drive, Suite 200
Glen Allen, Virginia 23060
PHONE: 804.290.7957
FAX: 804.290.7928
www.dewberry.com

ZION CROSSROADS
WATER BOOSTER PUMP STATION
AND WASTEWATER PUMP STATION

FLUVANNA COUNTY
DEPARTMENT OF PUBLIC WORKS

FLUVANNA COUNTY, VA.

KEY PLAN

SEAL

COMMONWEALTH OF VIRGINIA
DANYLO A. VILLIHAUER
Lic. No. 046419
5/4/2018
PROFESSIONAL ENGINEER

SCALE

No.	DATE	BY	Description

REVISIONS

DRAWN BY	BMM & JEH
APPROVED BY	DAV
CHECKED BY	BJH
DATE	MAY 2018

TITLE

WWPS
DETAILS

PROJECT NO. 50078863

A1.1

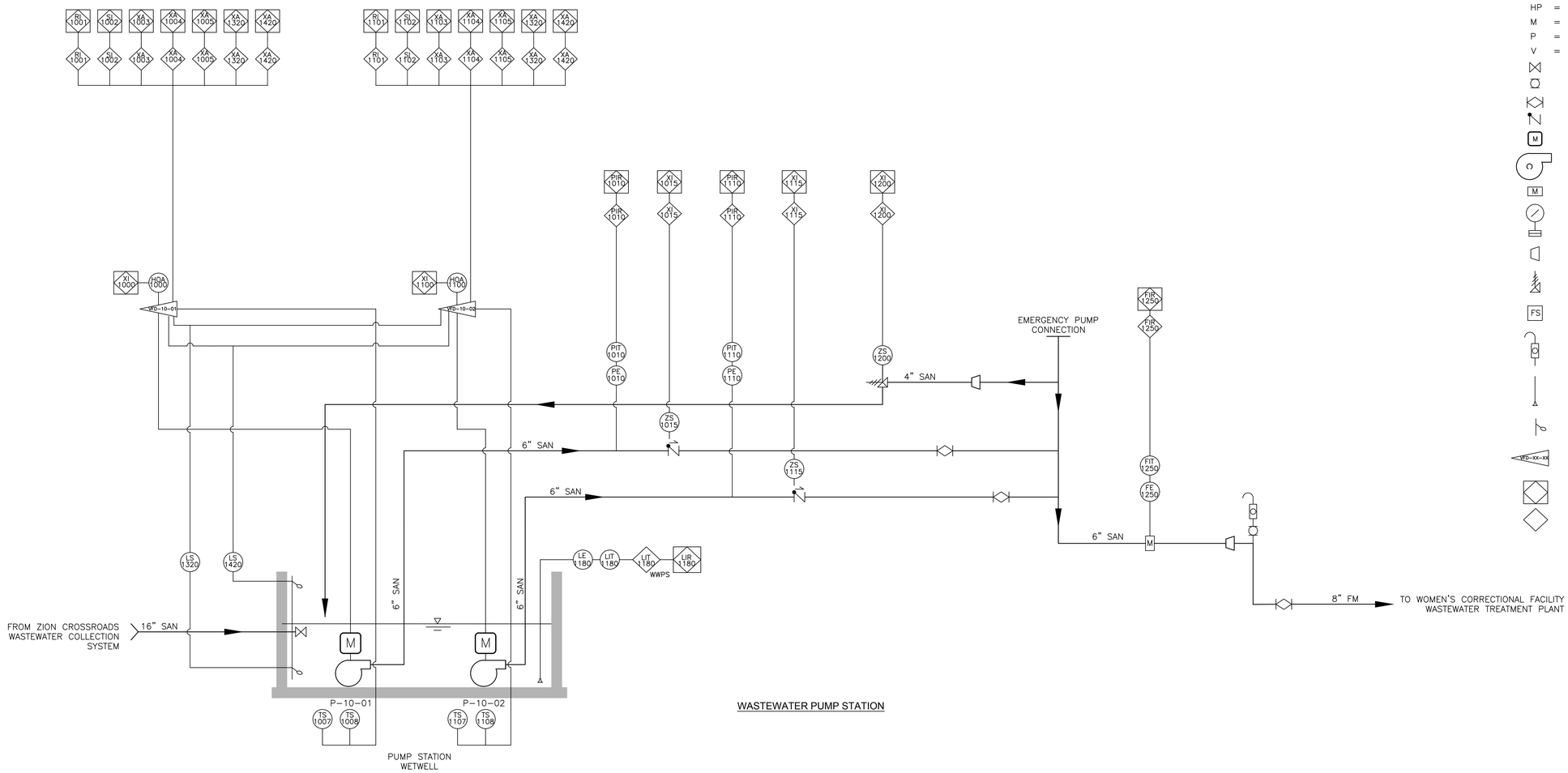

WASTEWATER PUMP STATION

NOTE: THE OWNER'S SYSTEM INTEGRATOR SHALL FURNISH THE PUMP CONTROL PANEL FOR INSTALLATION BY THE CONTRACTOR. CONTRACTOR SHALL COORDINATE ALL WIRING TO/FROM THE CONTROL PANEL WITH THE OWNER'S SYSTEM INTEGRATOR. THE CONTRACTOR SHALL PROVIDE AND INSTALL ALL CONDUIT, WIRING, INSTRUMENTS, ETC. AS REQUIRED BY THE PLANS. THE OWNER'S SYSTEM INTEGRATOR SHALL BE RESPONSIBLE FOR TESTING THE PUMP CONTROL PANEL ONCE INSTALLED BY THE CONTRACTOR.

	FIRST LETTER		SECOND LETTER		
	MEASURED OR INITIATING VARIABLE	MODIFIER	READOUT OR PASSIVE FUNCTION	OUTPUT FUNCTION	MODIFIER
A	ANALYSIS		ALARM		
B	BURNER, COMBUSTION				
C				CONTROL	CLOSED
D	DENSITY	DIFFERENTIAL	DATASTORE		
E	VOLTAGE		SENSOR – PRIMARY ELEMENT		
F	FLOW RATE	RATIO (FRACTION)			
G			GLASS, VIEWING DEVICE		
H	HAND				HIGH
I	CURRENT (ELECTRICAL)		INDICATE		
J	POWER	SCAN			
K	TIME, TIME SCHEDULE	TIME RATE OF CHANGE		CONTROL STATION	
L	LEVEL		LIGHT		LOW
M	MOTOR	MOMENTARY			MIDDLE, INTERMEDIATE
N	TORQUE		ISOLATOR		
O			ORIFICE, RESTRICTION		OPEN
P	PRESSURE, VACUUM		POINT – TEST CONNECTION		
Q	EVENT OR STATUS	INTEGRATE, TOTALIZE			
R	RUN		RECORD OR STORE		
S	SPEED, FREQUENCY	SAFETY		SWITCH	
T	TEMPERATURE			TRANSMIT	
U	MULTIVARIBALE		MULTIFUNCTION	MULTIFUNCTION	MULTIFUNCTION
V	VIBRATION, VOLUME, MECHANICAL ANALYSIS			VALVE, DAMPER, LOUVER	
W	WEIGHT, FORCE		WELL		
X	FAILURE OR UNCLASSIFIED	X–AXIS		COMPUTE,	
Y		Y–AXIS		CONVERT, RELAY	
				DRIVER, ACTUATOR, FINAL	
Z	POSITION, DIMINSION	Z–AXIS		CONTROL ELEMENT	

PROCESS AND INSTRUMENTATION LEGEND

ABBRE□IATIONS

HP = HORSE POWER
M = MOTOR
P = PUMP
V = VALVE

GATE VALVE
BALL VALVE
PLUG VALVE
SWING CHECK VALVE
MOTOR
CENTRIFUGAL PUMP
MAGNETIC FLOW METER
PRESSURE GAUGE
REDUCER
PRESSURE RELIEF VALVE
FLOW SWITCH
AIR RELEASE VALVE
SUBMERSIBLE LEVEL TRANSDUCER
FLOAT SWITCH
VARIABLE FREQUENCY DRIVE
SCADA SYSTEM
LOCAL PLC

BOS 2019-01-09 p.1427/1491

Dewberry

Dewberry Engineers Inc.
4805 Lake Brook Drive, Suite 200
Glen Allen, Virginia 23060
PHONE: 804.290.7957
FAX: 804.290.7928
www.dewberry.com

ZION CROSSROADS
WATER BOOSTER PUMP STATION
AND WASTEWATER PUMP STATION
FLUVANNA COUNTY
DEPARTMENT OF PUBLIC WORKS

FLUVANNA COUNTY, VA

KEY PLAN

SEAL

COMMONWEALTH OF VIRGINIA
DANYLO A. VILLIHAUER
Lic. No. 046419
5/4/2018
PROFESSIONAL ENGINEER

SCALE

No.	DATE	BY	Description

REVISIONS

DRAWN BY BMM & JEH
APPROVED BY DAV
CHECKED BY BJH
DATE MAY 2018

TITLE

WWPS PROCESS AND INSTRUMENTATION DIAGRAM

PROJECT NO. 50078863

I1.0

BOS 2019-01-09 p.1428/1491

WASTEWATER PUMP STATION
PLC I/O SCHEDULE

INSTRUMENT		P&ID	SIGNAL TYPE			
DESCR.	TYPE	element	DI	DO	AI	AO
Wastewater Pump No. 1	HOA Switch	1000	X			
P-10-01	Status On/Off	1001		X		
	VFD Speed	1002				X
	VFD Fail	1003	X			
	Seal Failure	1004	X			
	High Temp Shutdown	1005	X			
	Low Level Alarm	1320	X			
	High Level Alarm	1420	X			
Pump No. 1 Discharge Pressure	Pressure Transducer	1010			X	
Pump No. 1 Check Valve Status	Limit Switch	1015	X			
Wastewater Pump No. 2	HOA Switch	1100	X			
P-10-02	Status On/Off	1101		X		
	VFD Speed	1102				X
	VFD Fail	1103	X			
	Seal Failure	1104	X			
	High Temp Shutdown	1105	X			
	Low Level Alarm	1320	X			
	High Level Alarm	1420	X			
Pump No. 2 Discharge Pressure	Pressure Transducer	1110			X	
Pump No. 2 Check Valve Status	Limit Switch	1115	X			
Wetwell Level	Submersible Level Transducer	1180			X	
Surge Relief Valve Status	Limit Switch	1200	X			
Effluent Flow	Magnetic	1250			X	
Wetwell Level Backup	Low Level Float Switch	1320	X			
	High Level Float Switch	1420	X			
Standby Generator	Run Status	1500	X			
	Fail Status	1501	X			
	Fuel Tank Low Level	1502	X			
	Fuel Tank Leak	1503	X			
ATS	Position	1510	X			
	Power Available	1511	X			
Intrusion Alarms	Electrical Room Door 1	1600	X			
	Electrical Room Door 2	1601	X			
	Double Door 1	1602	X			
	Double Door 2	1603	X			
Temperature Alarm	Electrical Room High Temp.	1604	X			
Temperature Alarm	Mechanical Room Low Temp.	1605	X			
Exhaust Fan Alarm	Exhaust Fan Fail	1606	X			

NOTE: THE OWNER'S SYSTEM INTEGRATOR SHALL FURNISH THE PUMP CONTROL PANEL FOR INSTALLATION BY THE CONTRACTOR. CONTRACTOR SHALL COORDINATE ALL WIRING TO/FROM THE CONTROL PANEL WITH THE OWNER'S SYSTEM INTEGRATOR. THE CONTRACTOR SHALL PROVIDE AND INSTALL ALL CONDUIT, WIRING, INSTRUMENTS, ETC. AS REQUIRED BY THE PLANS. THE OWNER'S SYSTEM INTEGRATOR SHALL BE RESPONSIBLE FOR TESTING THE PUMP CONTROL PANEL ONCE INSTALLED BY THE CONTRACTOR.

Dewberry

Dewberry Engineers Inc.
4805 Lake Brook Drive, Suite 200
Glen Allen, Virginia 23060
PHONE: 804.290.7957
FAX: 804.290.7928
www.dewberry.com

ZION CROSSROADS
WATER BOOSTER PUMP STATION
AND WASTEWATER PUMP STATION
FLUVANNA COUNTY
DEPARTMENT OF PUBLIC WORKS
FLUVANNA COUNTY, VA

KEY PLAN

SEAL

COMMONWEALTH OF VIRGINIA
DANYLO A. VILLIHAUER
Lic. No. 046419
5/4/2018
PROFESSIONAL ENGINEER

SCALE

No.	DATE	BY	Description

REVISIONS

DRAWN BY: BMM & JEH
APPROVED BY: DAV
CHECKED BY: BJH
DATE: MAY 2018

TITLE

WWPS
PROCESS AND
INSTRUMENTATION
DIAGRAM

PROJECT NO. 50078863

I1.1

WWPS GENERAL ELECTRICAL NOTES:

1. THE CONTRACTOR SHALL PERFORM THE FOLLOWING FOR POWER SERVICE:
   - 1.1. COORDINATE WITH THE LOCAL POWER COMPANY AS REQUIRED FOR THE EXTENSION OF POWER TO THE SITE. INSTALL ALL UTILITY SUPPLIED EQUIPMENT PER THE UTILITY INSTALLATION INSTRUCTIONS AND REGULATIONS.
   - 1.2. COORDINATE WITH THE UTILITY TO ENSURE THAT PANEL MBD HAS AN AIC RATING WHICH EXCEEDS THAT WHICH IS DELIVERABLE TO THE SITE.
   - 1.3. PROVIDE BELOW GRADE CONDUIT STUBOUTS AND/OR EXTENSIONS TO THE UTILITY TRANSFORMER/POWER POLE AS REQUIRED BY THE UTILITY AND FOR USE BY THE UTILITY.
2. PROVIDE AND INSTALL BONDING BUSHINGS ON ALL SERVICE CONNECTIONS AND GROUNDING LOCKNUTS ON ALL PANEL CONNECTORS.
3. SURGE PROTECTION DEVICE (SPD):
   - 3.1. FOR PANELS MBD1:
     - 3.1.1. PROVIDE AND INSTALL CURRENT TECHNOLOGY TransEnd 80 (OR EQUAL) UL 1449 3RD EDITION AND INSTALL PER THE MANUFACTURER'S INSTALLATION INSTRUCTIONS AND RECOMMENDATIONS.
   - 3.2. FOR PANELBOARDS MDP1 & PB1
     - 3.2.1. PROVIDE AND INSTALL A UL LISTED SURGE ARRESTOR AS AN INTEGRAL COMPONENT TO EACH PANELBOARD. PROVIDE SHORT CIRCUIT PROTECTION IF REQUIRED.
4. ALL WIRE INSTALLED UNDER THIS CONTRACT SHALL BE COPPER.
5. ALL EQUIPMENT SHALL BE INSTALLED IN ACCORDANCE WITH LOCAL CODES AND REGULATIONS.
6. ALL EQUIPMENT SHALL BE PROVIDED WITH LAMICOID NAMEPLATES (3/16" LETTERING MIN.).
7. ALL PANELBOARD SCHEDULES SHALL REFLECT AS-BUILT CONDITIONS.
8. REFERENCE THE CIVIL SITE PLAN FOR ALL EQUIPMENT LOCATIONS AND DISTANCES.
9. REFERENCE CIVIL/MECHANICAL DRAWINGS FOR EQUIPMENT AND SENSOR MOUNTING DETAILS AND WET WELL CONDUIT INSTALLATION DETAILS.
10. CONDUIT NOTES:
    - 10.1. DUCT BANKS SHALL UTILIZE PVC SCHEDULE-40 CONDUIT
    - 10.2. PVC COATED RIGID STEEL CONDUIT AND ACCESSORIES SHALL BE USED FOR THE FOLLOWING:
      - 10.2.1. SINGLE UNDERGROUND CONDUIT RUNS FOR MISC. 120VAC POWER CIRCUITS AND MONITORING CIRCUITS @24" BELOW GRADE WITH RED VINYL WARNING TAPE AT 6" ABOVE THE CONDUIT.
      - 10.2.2. ALL CONDUIT EXTENDING TO/FROM THE WASTE WATER WET WELL.
      - 10.2.3. PROVIDE PVC REPAIR WITH MANUFACTURERS TOUCH-UP KIT WHERE REQUIRED.
    - 10.3. GALVANIZED RIGID STEEL CONDUIT SHALL BE USED FOR ALL INTERIOR CONDUIT AND ABOVE GRADE EXTERIOR CONDUIT. STUBUPS SHALL BE MINIMUM 12" ABOVE GRADE AND OR FINISHED FLOOR.
    - 10.4. CONDUIT EXTENDED TO EQUIPMENT THAT IS LOCATED MORE THAN 2FT FROM AN ADJACENT WALL SHALL BE EXTENDED IN THE SLAB WITH THE STUBUP LOCATED ADJACENT TO AND COORDINATED WITH THE EQUIPMENT.
    - 10.5. CONDUIT REQUIRED FOR FUTURE EQUIPMENT SHALL BE PROVIDED AND INSTALLED. EACH CONDUIT SHALL BE EXTENDED TO A POINT ADJACENT TO THE EQUIPMENT. INTERIOR CONDUIT STUBUPS SHALL BE A THREADED COUPLING SET FLUSH IN THE FLOOR, CAPPED AND SEALED WITH A PULL CORD INSTALLED FOR FUTURE USE. EXTERIOR CONDUIT STUBUPS SHALL BE A THREADED COUPLING 6" ABOVE GRADE AND/OR CONCRETE PAD, CAPPED AND SEALED WITH A PULL CORD INSTALLED FOR FUTURE USE.
11. LIGHTS AND RECEPTACLES – REFERENCE EACH BUILDING'S PLAN/ELEVATION VIEWS FOR LOCATIONS AND QUANTITIES OF LIGHTS AND RECEPTACLES. CONDUIT FOR EXTERIOR LIGHTING AND RECEPTACLES SHALL BE RUN INSIDE WITH SEALED CONDUIT PENETRATIONS THROUGH THE WALL FOR EACH LIGHTING FIXTURE AND RECEPTACLE. ALL RECEPTACLES SHALL BE DUPLEX 20AMP GFCI TYPE WITH WEATHERPROOF IN USE COVERS THAT FULLY CLOSE WHILE IN USE. THE GROUNDING CONDUCTOR SHALL BE CONNECTED TO ALL RECEPTACLES SUCH THAT THE REMOVAL OF ANY RECEPTACLE WILL NOT INTERRUPT THE CONTINUITY TO OTHER RECEPTACLES.
12. ALL ENCLOSURES SHALL BE AS FOLLOWS UNLESS SPECIFICALLY NOTED OTHERWISE:
    - 12.1. UL LISTED FOR THE INTENDED PURPOSE. THIS INCLUDES UL508A FOR "ENCLOSED INDUSTRIAL CONTROL PANELS".
    - 12.2. ENCLOSURES MOUNTED INSIDE (NOT IN AN ELECTRICAL ROOM: NEMA-4 (min)
    - 12.2. ENCLOSURES MOUNTED INSIDE (IN AN ELECTRICAL ROOM: NEMA-12 (min)
    - 12.3. ENCLOSURES MOUNTED OUTSIDE: NEMA-4X STAINLESS STEEL.
    - 12.4. ALL ENCLOSURES SHALL BE PROVIDED WITH AMBIENT COMPENSATION AS REQUIRED BY THE INSTALLED EQUIPMENT. (ie. AIR CONDITIONER, HEATER, COOLING FANS, ETC.
    - 12.5. ALL ENCLOSURES SHALL BE PAD LOCKABLE.
13. MISCELLANEOUS JUNCTION BOXES AND THE WWJB:
    - 13.1. ALL WIRING INSIDE SHALL TERMINATE ON DIN RAIL MOUNTED FINGER-SAFE TERMINALS WITH PROPER RATINGS AND MARKED WITH THE TERMINAL MANUFACTURER'S TAGGING SYSTEM. PROVIDE PANDUIT WIREWAY, OR EQUAL, FOR THE ROUTING OF ALL WIRE AND CABLE INSIDE THE BOX. TERMINALS AND WIRING SHALL BE SEPARATED BY TYPE. (ie. INTRISICALLY SAFE, CONTROL, SIGNAL). MAINTAIN PROPER SEPARATION BETWEEN INTRINSICALLY SAFE AND NON-INTRINSICALLY SAFE CIRCUITS PER UL AND NEC.
    - 13.2. PROVIDE ANALOG/DISCRETE ISBR RELAYS FOR EACH FLOAT/SENSOR LOCATED IN THE WET WELL HAZARDOUS LOCATION.
    - 13.3. SPLIT BOLTS, WIRENUTS, BUTT-SPLICES AND THE LIKE ARE NOT ACCEPTABLE.
    - 13.4. THE ENCLOSURE SIZE SHALL BE (16"X16"X6" HxWxD MIN.). CONTRACTOR SHALL INCREASE THE SIZE OF EACH JUNCTION BOX AS REQUIRED PER NEC.
14. GROUND RING FOR EACH BUILDING:
    - 14.1. EXTEND 4/0 COPPER FROM MDP TO BUILDING GROUND RING. PROVIDE AND INSTALL A 4/0 GROUND RING W/A GROUND ROD AT EACH CORNER OF THE BUILDING.
    - 14.2. GROUND RING CONDUCTOR SHALL BE 30" BELOW GRADE.
    - 14.3. REFERENCE GROUNDING SPECIFICATIONS FOR ADDITIONAL REQUIREMENTS.
    - 14.4. EACH GROUND ROD SHALL BE 3/4"DIA X 10FT COPPER CLAD WITH THE TOP LOCATED 24" BELOW GRADE (MIN).
    - 14.5. ALL CONNECTIONS TO GROUND RODS SHALL BE BARE COPPER CAD WELDED.
    - 14.6. PROVIDE AN ENCLOSED WATER TIGHT EXTERIOR GROUND TEST POINT ENCLOSURE WITH ACCESS FROM GRADE LEVEL AT ONE CORNER OF THE BUILDING.
    - 14.7. PROVIDE AND INSTALL A CONCRETE ENCASED ELECTRODE PER NEC 250.52(A)(3).
    - 14.8. EXTEND A BELOW GRADE BARE COPPER CONDUCTOR (2/0 min.) TO EACH METAL RAILING, FENCE, EQUIPMENT STRUCTURE/CONCRETE PAD, SUPPORT STRUCTURE AND POURED CONCRETE REBAR REINFORCING SYSTEM.
15. EXHAUST FAN CONTROL PANEL (FCP) REQUIREMENTS:
    - 15.1. THE FAN CONTROL PANEL SHALL INCLUDE, BUT NOT BE LIMITED TO THE FOLLOWING DEVICES:
      - 15.1.1. ENCLOSURE PER NOTE-12
      - 15.1.2. FAN MOTOR CIRCUIT PROTECTOR AND CONTACTOR WITH ADJUSTABLE OVERLOAD.
      - 15.1.3. LOUVER CONTACTOR
      - 15.1.4. LOUVER FAIL-TO-OPEN TIMER WITH MULTIPLE CONTACTS:
        - 15.1.4.1. CONTACT-1: STOP FAN
        - 15.1.4.2. CONTACT-2: ACTIVATE THE FAULT LIGHT
        - 15.1.4.3. CONTACT-3: REMOTE ALARM INDICATION
      - 15.1.5. DOOR MOUNTED DEVICES:
        - 15.1.5.1. 120Vac MAIN CIRCUIT BREAKER AND PAD-LOCKABLE POWER ON/OFF SWITCH WITH DOOR INTERLOCK.
        - 15.1.5.2. HAND-OFF-AUTO SELECTOR SWITCH
        - 15.1.5.3. GREEN PILOT LIGHT (FAN RUNNING)
        - 15.1.5.4. RED PILOT LIGHT (FAN OVERLOAD TRIPPED)
        - 15.1.5.5. RED PILOT LIGHT (LOUVER FAILED TO OPEN)
        - 15.1.5.6. LOUVER FAIL-TO-OPEN RESET BUTTON
      - 15.1.6. HAND OR AUTO OPERATION:
        - 15.1.6.1. THE LOUVER IS POWERED OPEN AND DE-ENERGIZED FOR A SPRING RETURN TO CLOSE.
        - 15.1.6.2. THE LOUVER OPEN LIMIT SWITCH WILL ACTIVATE THE EXHAUST FAN.
        - 15.1.6.3. AUTO START IS INITIATED BY THERMOSTAT OR BY THE CONTINUOUS CYCLE TIMER
      - 15.1.7. STATUS CONTACTS: RUNNING, OVERLOAD FAULT, LOUVER FAIL-TO-OPEN FAULT

TYPICAL EXHAUST FAN CONTROL PANEL (FCP) STANDARD SCHEMATIC

REFERENCE NOTE-15 FOR ADDITIONAL REQUIREMENTS. 120V/1ø POWERED FAN SCHEMATIC SHOWN WITH ELECTRIC LOUVER DAMPER.

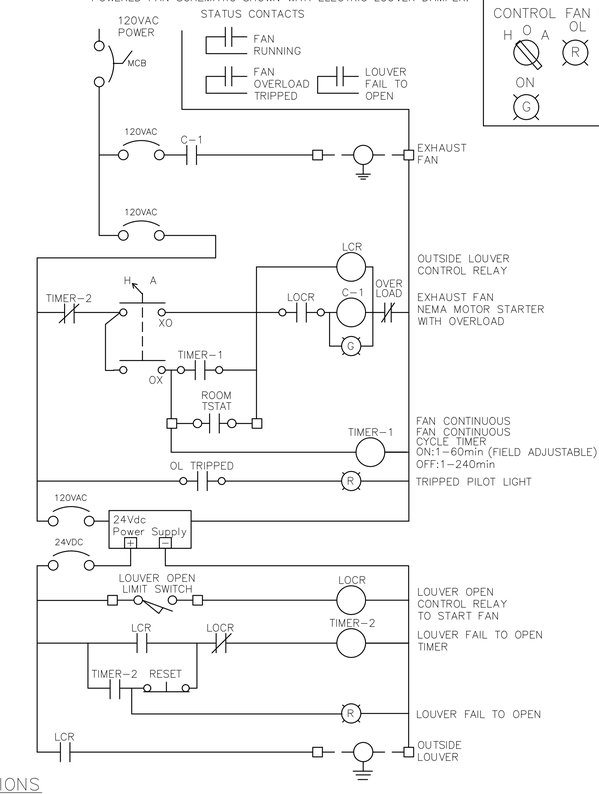

TYPICAL DOOR LAYOUT

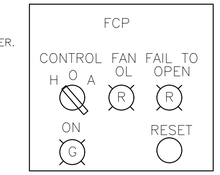

ABBREVIATIONS

(A Number Designates the Unit where applicable)

- ATS – AUTOMATIC TRANSFER SWITCH
- CB – CIRCUIT BREAKER
- CVxLS – CHECK VALVE LIMIT SWITCH
- DISC – MACHINE LOCAL DISCONNECT SWITCH
- DPT – PUMP DISCHARGE PRESSURE TRANSDUCER
- DS – DOOR SWITCH
- FMT – FLOW METER TRANSMITTER
- GMB – GENERATOR MAIN BREAKER
- ISBR – INTRINSICALLY SAFE BARRIER RELAY
- J – JUNCTION BOX
- S – LIGHT SWITCH
- LM – LOUVER MOTOR
- MANUF – MANUFACTURER
- MB – UTILITY METERBASE/CT CABINET
- MBD – SERVICE ENTRANCE MAIN BREAKER DISCONNECT
- MDP – MAIN DISTRIBUTION PANELBOARD
- P – PUMP
- PB – DISTRIBUTION PANELBOARD
- PCP – PUMP CONTROL PANEL
- PFCP – PUMP FLOAT CONTROL PANEL
- R – RECEPTACLE
- SDPT – WBS STATION DISCHARGE PRESSURE TRANSDUCER
- SIPT – WBS STATION INLET PRESSURE TRANSDUCER
- SLT – SUBMERSIBLE LEVEL TRANSDUCER
- SPD – SURGE PROTECTION DEVICE
- SRLS – SURGE RELIEF VALVE LIMIT SWITCH
- T – THERMOSTAT
- TX – TRANSFORMER
- UG – UNDER GROUND
- UH – UNIT HEATER
- VFD – VARIABLE FREQUENCY DRIVE
- WBS – WATER BOOSTER STATION
- WP – WEATHERPROOF
- WWJB – WET WELL JUNCTION BOX
- WWPS – WASTE WATER PUMP STATION

ELECTRICAL LEGEND

ALL SYMBOLS MAY NOT BE USED ON THIS CONTRACT

- +44" S — WALL MOUNTED TOGGLE SWITCH DIMENSION IS HEIGHT ABOVE FINISHED FLOOR
- S_3 — WALL MOUNTED TOGGLE SWITCH NO. INDICATES 3-WAY, 4-WAY, ETC.
- RECEPTACLE
- CONDUIT RUN
- INDICATES NO. OF WIRES (1-HOT,1-NEUTRAL & 1-GROUND)
- INDICATES A CONDUIT "HOMERUN" TO A DESIGNATED PANEL. NOT INTENDED TO BE ALL INCLUSIVE, REFERENCE THE POWER DISTRIBUTION DIAGRAM FOR CONDUIT/WIRE DETAILS
- PAD-LOCKABLE DISCONNECT SWITCH
- CMS — PAD-LOCKABLE COMBINATION MOTOR STARTER W/OVERLOADS & PHASE MONITORING RELAY
- GROUND ROD
- GROUND ROD FOR GROUND RING

WWPS AND WBS LIGHTING FIXTURE SCHEDULE:

LIGHTING FIXTURE SCHEDULE

FIXTURES SHALL BE PER THE SCHEDULE OR APPROVED EQUAL

TYPE	MANUF.	CAT. NUMBER	FIXTURE	LAMPS	
			MOUNTING	TYPE	VOLTS
A	LITHONIA	VAP-4000LM-WD-120-GZ10-40K-80CRI-STSL WET LOCATION & SURFACE MOUNT HARDWARE	SURFACE	LED	120VAC
AE	LITHONIA	VAP-4000LM-WD-120-GZ10-40K-80CRI-BSL722C-STSL WET LOCATION & SURFACE MOUNT HARDWARE	SURFACE	LED	120VAC
B	MAXLITE	MLSWP20WLED50DSPC12 SMALL WALLPACK	SURFACE	LED	120VAC
C	LITHONIA	WEATHERPROOF DUAL HEAD LED FLOOD LIGHTS CONTROLLED BY SWITCH	SURFACE	LED	120VAC
EX	PHILIPS	ER55LDT212/27WRTP	SURFACE	LED	120VAC

DOMINION CONTROL SYSTEMS, INC.
11080 L□□d□□□r R□□d □P.O. B□□6301 □A□□□d□□A 23005
PHONE □804□752-6323 FAX □804□752-6774

Dewberry
Dewberry Engineers Inc.
4805 Lake Brook Drive, Suite 200
Glen Allen, Virginia 23060
PHONE: 804.290.7957
FAX: 804.290.7928
www.dewberry.com

ZION CROSSROADS
WATER BOOSTER PUMP STATION
AND WASTEWATER PUMP STATION
FLUVANNA COUNTY
DEPARTMENT OF PUBLIC WORKS
FLUVANNA COUNTY, VA

KEY PLAN

SEAL

COMMONWEALTH OF VIRGINIA
D. L. Glasscock
Lic. No.036309
5/4/18
PROFESSIONAL ENGINEER

SCALE

No.	DATE	BY	Description

REVISIONS

DRAWN BY	DLG
APPROVED BY	DAV
CHECKED BY	DLG
DATE	MAY 2018

TITLE

WWPS
GENERAL
ELECTRICAL
DIAGRAMS AND NOTES

PROJECT NO. 50078863

E0.1

Dewberry

Dewberry Engineers Inc.
4805 Lake Brook Drive, Suite 200
Glen Allen, Virginia 23060
PHONE: 804.290.7957
FAX: 804.290.7928
www.dewberry.com

WASTE WATER PUMP STATION (WWPS) ELECTRICAL DISTRIBUTION

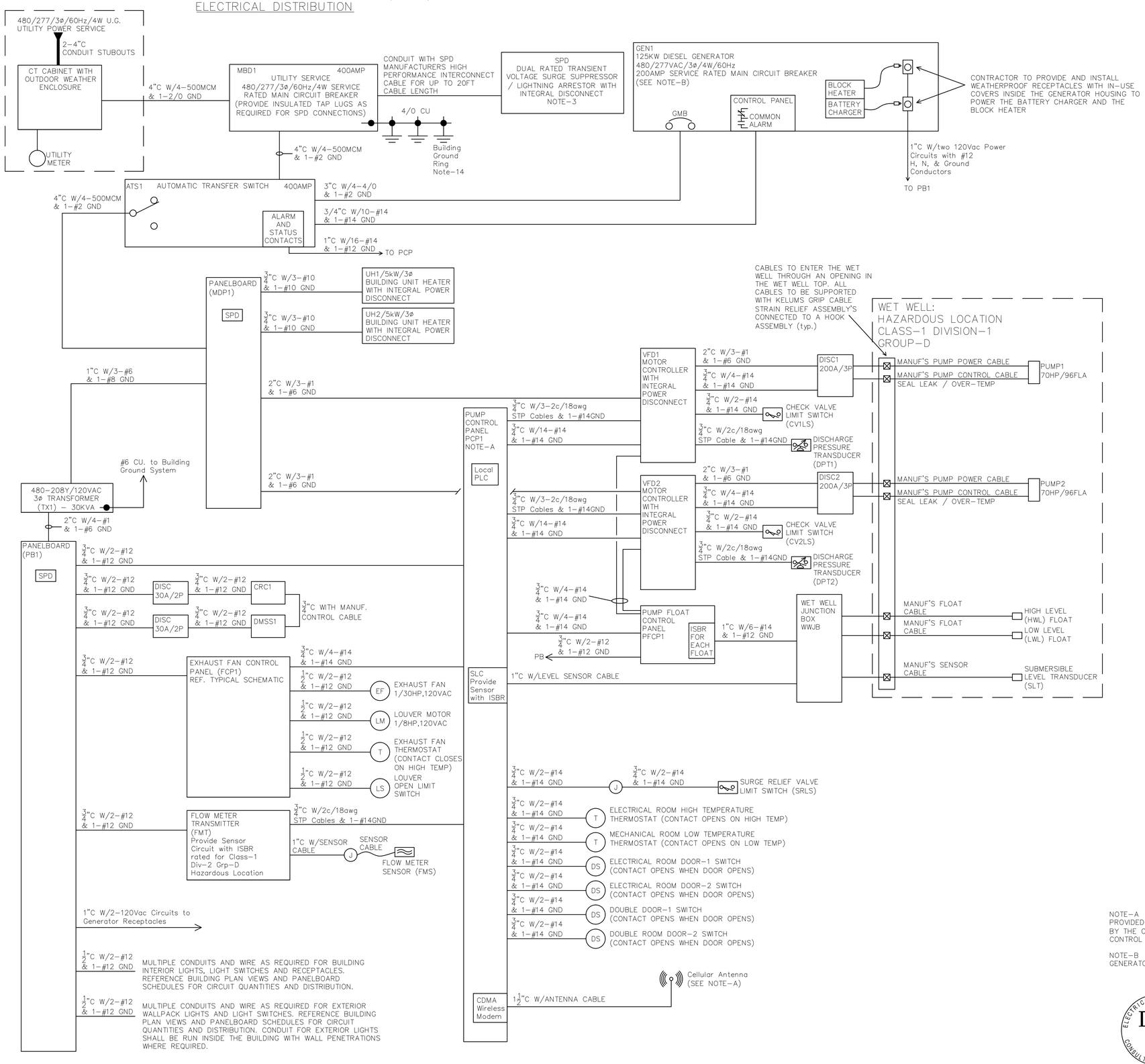

NOTE-A
PROVIDED BY OWNERS SYSTEMS INTEGRATOR FOR INSTALLATION BY THE CONTRACTOR. COORDINATE ALL WIRING TO/FROM THE CONTROL PANEL WITH THE OWNERS SYSTEMS INTEGRATOR.

NOTE-B
GENERATOR SIZED FOR OPERATION OF ONE PUMP ONLY.

DOMINION CONTROL SYSTEMS, INC.
11080 L□d□□r R□d P.O. B□□6301 A□□d□A 23005
PHONE 804 752-6323 FAX 804 752-6774

ZION CROSSROADS
WATER BOOSTER PUMP STATION
AND WASTEWATER PUMP STATION
FLUVANNA COUNTY
DEPARTMENT OF PUBLIC WORKS
FLUVANNA COUNTY, VA

KEY PLAN

SEAL
COMMONWEALTH OF VIRGINIA
D. L. Glasscock
Lic. No.036309
5/4/18
PROFESSIONAL ENGINEER

SCALE

No.	DATE	BY	Description

REVISIONS

DRAWN BY	DLG
APPROVED BY	DAV
CHECKED BY	DLG
DATE	MAY 2018

TITLE

WWPS
ELECTRICAL
DIAGRAMS AND NOTES

PROJECT NO. 50078863

E1.0

WASTE WATER PUMP STATION (WWPS)

PANELBOARD: MDP1, SERVICE RATED, (65kAIC)
MOUNTING: SURFACE
ENCLOSURE: NEMA-12, 30CKT (min)

MAIN BUSS: 400AMP, COPPER
VOLTAGE: 480Y/277VAC,3ø,4W,60Hz
INTERIOR: 400AMP/65kAIC MAIN BREAKER

LOAD DESCRIPTION	CB SIZE	# POLE	CKT NO	AMPS/PHASE øA	AMPS/PHASE øB	AMPS/PHASE øC	CKT NO	# POLE	CB SIZE	LOAD DESCRIPTION
PUMP1 VFD1	150	3	1	96			2	3	150	PUMP2 VFD2
			3	96			4			
			5		96		6			
UNIT HEATER UH1 (5KW)	15	3	7	8			8	3	15	UNIT HEATER UH2 (5KW)
			9	8			10			
			11		8		12			
480-208Y/120Vac 3-PHASE TRANSFORMER TX1 (30kVA)	50	3	13	36			14	3	20	SPARE BREAKER
			15	--	36		16			
			17		--	36	18			
PREPARED SPACE	--	3	19	--			20	3	--	PREPARED SPACE
			21	--	--		22			
			23			--	24			
PREPARED SPACE	--	3	25	--			26	3	**	SURGE PROTECTION DEVICE INTEGRAL TO PANELBOARD. ** - COORDINATE CIRCUIT BREAKER SELECTION WITH SPD MANUFACTURER. NOTE-3
			27	--	--		28			
			29			--	30			
				244	244	244	TOTAL AMPS			

PANELBOARD: PB1, SERVICE RATED (22kAIC)
MOUNTING: SURFACE
ENCLOSURE: NEMA-12, 30CKT (min)

MAIN BUSS: 200AMP, COPPER
VOLTAGE: 208Y/120VAC,3ø,4W,60Hz
INTERIOR: 110AMP/22kAIC MAIN BREAKER

LOAD DESCRIPTION	CB SIZE	# POLE	CKT NO	AMPS/PHASE øA	AMPS/PHASE øB	AMPS/PHASE øC	CKT NO	# POLE	CB SIZE	LOAD DESCRIPTION
BUILDING EXTERIOR LIGHTING	20	1	1	5			2	1	20 GFI	PIPE ROOM RECEPTACLES
PIPE ROOM LIGHTING CIRCUIT	15	1	3		5		4	1	15	SPARE BREAKER
CONTROL ROOM LIGHTING	20	1	5			5	6	1	20 GFI	CONTROL ROOM RECEPTACLES
PUMP CONTROL PANEL	20	1	7	5			8	1	20 GFI	OUTSIDE RECEPTACLES
SPARE BREAKER	20	1	9		--		10	1	20 GFI	EXHAUST FAN PANEL (FCP2)
GENERATOR BATTERY CHARGER	20	1	11			5	12	1	20	GENERATOR BLOCK HEATER
SPARE BREAKER	20	1	13	--			14	2	15	SPLIT SYSTEM HEAT PUMP OUTDOOR UNIT
SPLIT SYSTEM HEAT PUMP INDOOR UNIT	20	2	15		13.5		16			
			17			13.5	18	1	20	SPARE BREAKER
PREPARED SPACE	--	1	19	--			20	3	**	SURGE PROTECTION DEVICE INTEGRAL TO PANELBOARD. ** - COORDINATE CIRCUIT BREAKER SELECTION WITH SPD MANUFACTURER. NOTE-3
PREPARED SPACE	--	1	21		--		22			
PREPARED SPACE	--	1	23			--	24			
PREPARED SPACE	--	1	25	--			26	1	--	PREPARED SPACE
PREPARED SPACE	--	1	27		--		28	1	--	PREPARED SPACE
PREPARED SPACE	--	1	29			--	30	1	--	PREPARED SPACE
				26	30.5	36.5	TOTAL AMPS			

BOS 2019-01-09 p.1431/1491

Dewberry

Dewberry Engineers Inc.
4805 Lake Brook Drive, Suite 200
Glen Allen, Virginia 23060
PHONE: 804.290.7957
FAX: 804.290.7928
www.dewberry.com

ZION CROSSROADS
WATER BOOSTER PUMP STATION
AND WASTEWATER PUMP STATION
FLUVANNA COUNTY
DEPARTMENT OF PUBLIC WORKS
FLUVANNA COUNTY, VA.

KEY PLAN

SEAL

COMMONWEALTH OF VIRGINIA
D. L. Glasscock
Lic. No.036309
5/4/18
PROFESSIONAL ENGINEER

SCALE

No.	DATE	BY	Description

REVISIONS

DRAWN BY DLG
APPROVED BY DAV
CHECKED BY DLG
DATE MAY 2018

TITLE

WWPS
ELECTRICAL
SCHEDULES AND NOTES

PROJECT NO. 50078863

E1.1

ELECTRICAL ENGINEERING CONSULTING SERVICES
DCS
DOMINION CONTROL SYSTEMS, INC.
11080 L□d□□□r R□d P.O. B□□6301 A□□□d□A 23005
PHONE□804□752-6323 FAX□804□752-6774

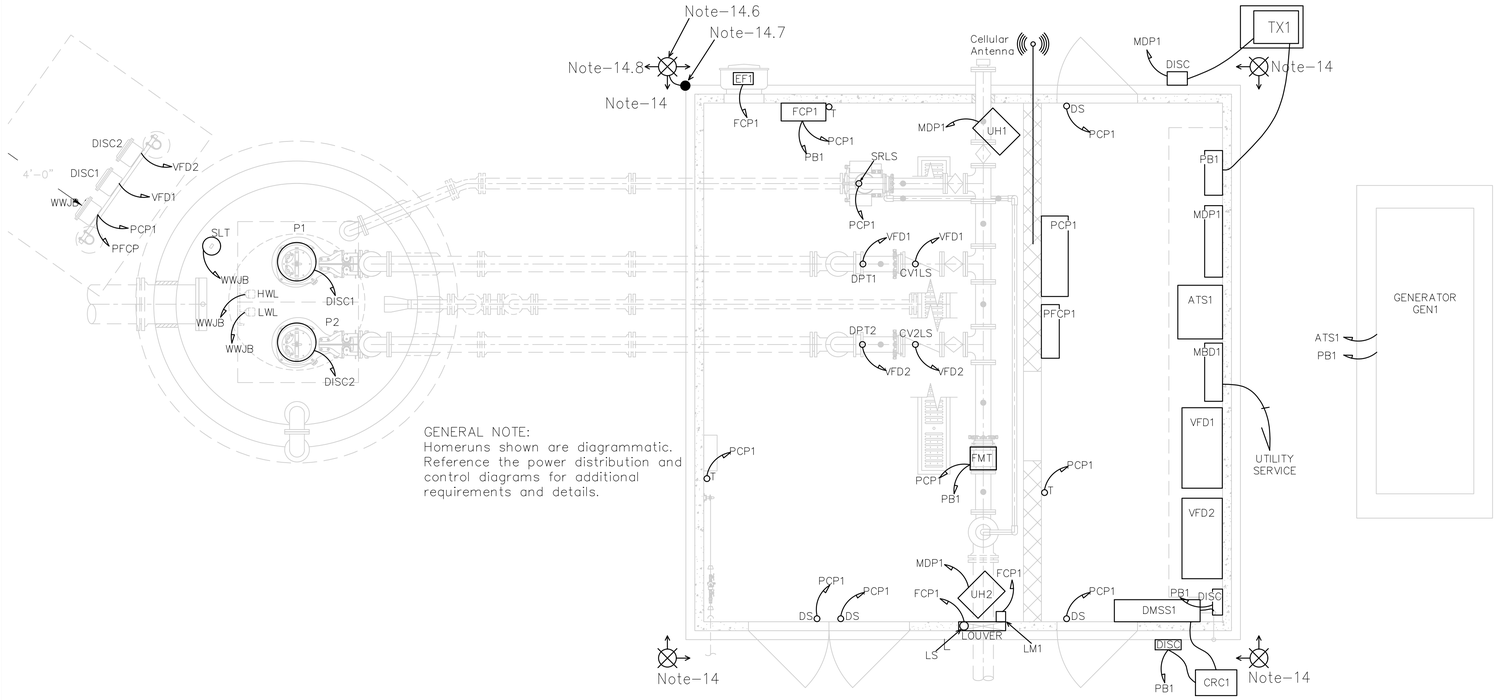

GENERAL NOTE:
Homeruns shown are diagrammatic. Reference the power distribution and control diagrams for additional requirements and details.

WWPS ELECTRICAL PLAN

SCALE: 3/8" = 1'-0"

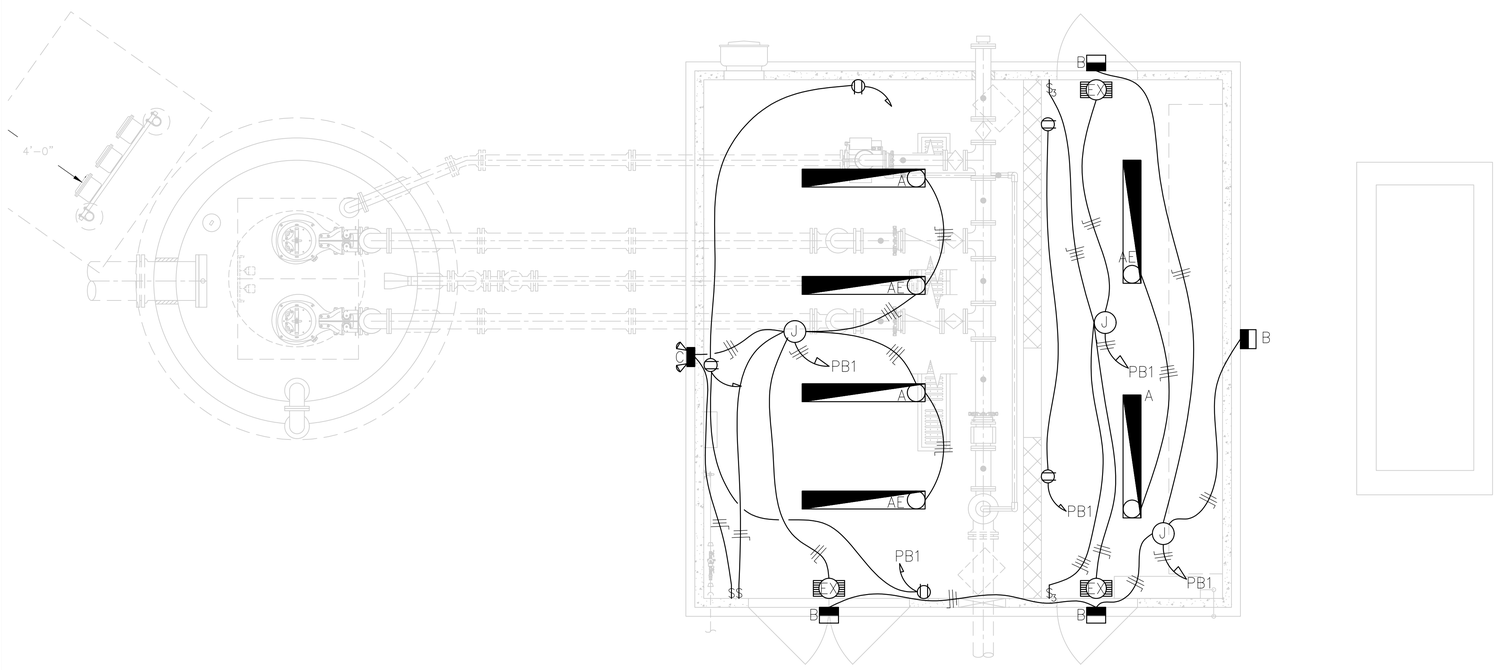

WWPS LIGHTS/RECEPTACLES PLAN

SCALE: 3/8" = 1'-0"

Dewberry

Dewberry Engineers Inc.
4805 Lake Brook Drive, Suite 200
Glen Allen, Virginia 23060
PHONE: 804.290.7957
FAX: 804.290.7928
www.dewberry.com

ZION CROSSROADS
WATER BOOSTER PUMP STATION
AND WASTEWATER PUMP STATION

FLUVANNA COUNTY
DEPARTMENT OF PUBLIC WORKS

FLUVANNA COUNTY, VA.

KEY PLAN

SEAL

COMMONWEALTH OF VIRGINIA
D. L. Glasscock
Lic. No.036309
5/4/18
PROFESSIONAL ENGINEER

SCALE

No.	DATE	BY	Description

REVISIONS

DRAWN BY	DLG
APPROVED BY	DAV
CHECKED BY	DLG
DATE	MAY 2018

TITLE

WWPS
ELECTRICAL
VIEWS AND NOTES

PROJECT NO. 50078863

E1.2

DOMINION CONTROL SYSTEMS, INC.
11080 L□□d□□□□r R□□d □P.O. B□□ 6301 □A□□□□ d□□A 23005
PHONE□□804□752-6323 FAX□□804□752-6774

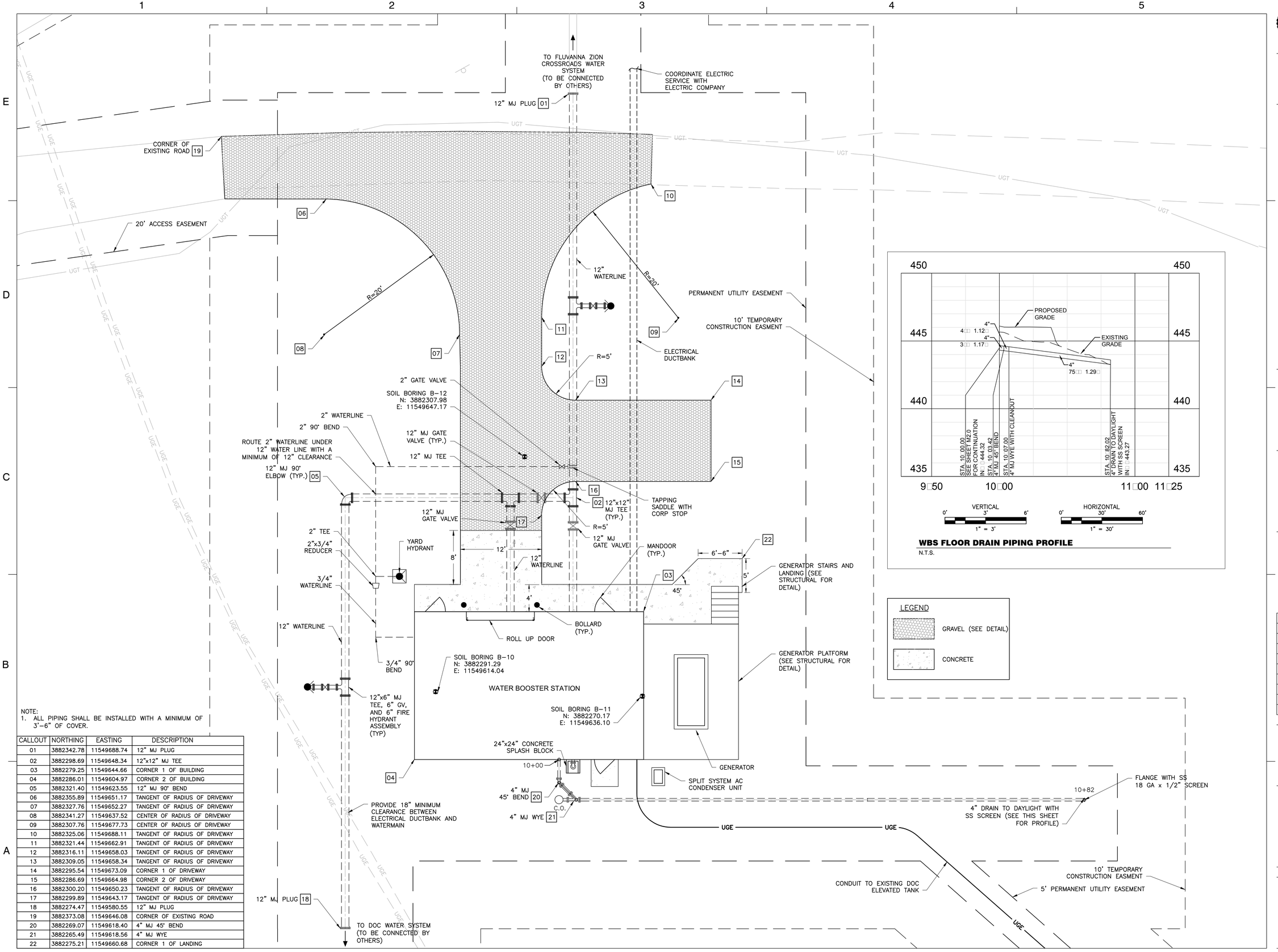

WBS FLOOR DRAIN PIPING PROFILE

N.T.S.

LEGEND

GRAVEL (SEE DETAIL)

CONCRETE

NOTE:
1. ALL PIPING SHALL BE INSTALLED WITH A MINIMUM OF 3'-6" OF COVER.

CALLOUT	NORTHING	EASTING	DESCRIPTION
01	3882342.78	11549688.74	12" MJ PLUG
02	3882298.69	11549648.34	12"x12" MJ TEE
03	3882279.25	11549644.66	CORNER 1 OF BUILDING
04	3882286.01	11549604.97	CORNER 2 OF BUILDING
05	3882321.40	11549623.55	12" MJ 90° BEND
06	3882355.89	11549651.17	TANGENT OF RADIUS OF DRIVEWAY
07	3882327.76	11549652.27	TANGENT OF RADIUS OF DRIVEWAY
08	3882341.27	11549637.52	CENTER OF RADIUS OF DRIVEWAY
09	3882307.76	11549677.73	CENTER OF RADIUS OF DRIVEWAY
10	3882325.06	11549688.11	TANGENT OF RADIUS OF DRIVEWAY
11	3882321.44	11549662.91	TANGENT OF RADIUS OF DRIVEWAY
12	3882316.11	11549658.03	TANGENT OF RADIUS OF DRIVEWAY
13	3882309.05	11549658.34	TANGENT OF RADIUS OF DRIVEWAY
14	3882295.54	11549673.09	CORNER 1 OF DRIVEWAY
15	3882286.69	11549664.98	CORNER 2 OF DRIVEWAY
16	3882300.20	11549650.23	TANGENT OF RADIUS OF DRIVEWAY
17	3882299.89	11549643.17	TANGENT OF RADIUS OF DRIVEWAY
18	3882274.47	11549580.55	12" MJ PLUG
19	3882373.08	11549646.08	CORNER OF EXISTING ROAD
20	3882269.07	11549618.40	4" MJ 45° BEND
21	3882265.49	11549618.56	4" MJ WYE
22	3882275.21	11549660.68	CORNER 1 OF LANDING

Dewberry

Dewberry Engineers Inc.
4805 Lake Brook Drive, Suite 200
Glen Allen, Virginia 23060
PHONE: 804.290.7957
FAX: 804.290.7928
www.dewberry.com

ZION CROSSROADS
WATER BOOSTER PUMP STATION
AND WASTEWATER PUMP STATION

FLUVANNA COUNTY
DEPARTMENT OF PUBLIC WORKS

FLUVANNA COUNTY, VA

KEY PLAN

SEAL

COMMONWEALTH OF VIRGINIA
DANYLO A. VILLIHAUER
Lic. No. 046419
5/4/2018
PROFESSIONAL ENGINEER

SCALE

0' 6' 12'
GRAPHIC SCALE
1" = 6'

No.	DATE	BY	Description

REVISIONS

DRAWN BY	BMM & JEH
APPROVED BY	DAV
CHECKED BY	BJH
DATE	MAY 2018

TITLE

WBS
SITE LAYOUT
AND PIPING PLAN

PROJECT NO. 50078863

C2.0

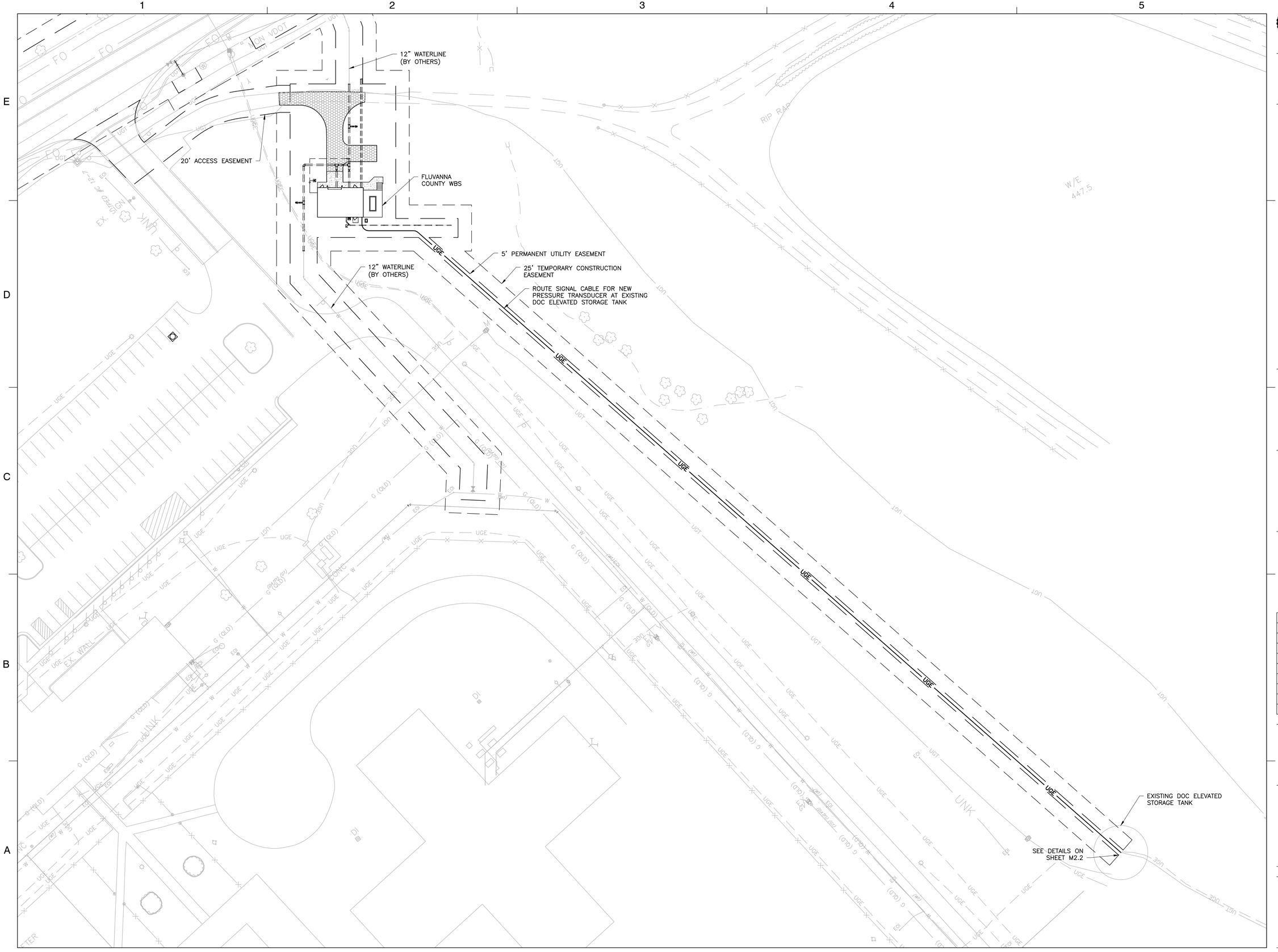

Dewberry

Dewberry Engineers Inc.
4805 Lake Brook Drive, Suite 200
Glen Allen, Virginia 23060
PHONE: 804.290.7957
FAX: 804.290.7928
www.dewberry.com

ZION CROSSROADS WATER BOOSTER PUMP STATION AND WASTEWATER PUMP STATION

FLUVANNA COUNTY
DEPARTMENT OF PUBLIC WORKS

FLUVANNA COUNTY, VA

KEY PLAN

SEAL

COMMONWEALTH OF VIRGINIA
DANYLO A. VILLIHAUER
Lic. No. 046419
5/4/2018
PROFESSIONAL ENGINEER

SCALE

0' 30' 60'
GRAPHIC SCALE
1" = 30'

No.	DATE	BY	Description

REVISIONS

DRAWN BY	BMM & JEH
APPROVED BY	DAV
CHECKED BY	BJH
DATE	MAY 2018

TITLE

WBS OVERALL SITE PLAN

PROJECT NO. 50078863

C2.1

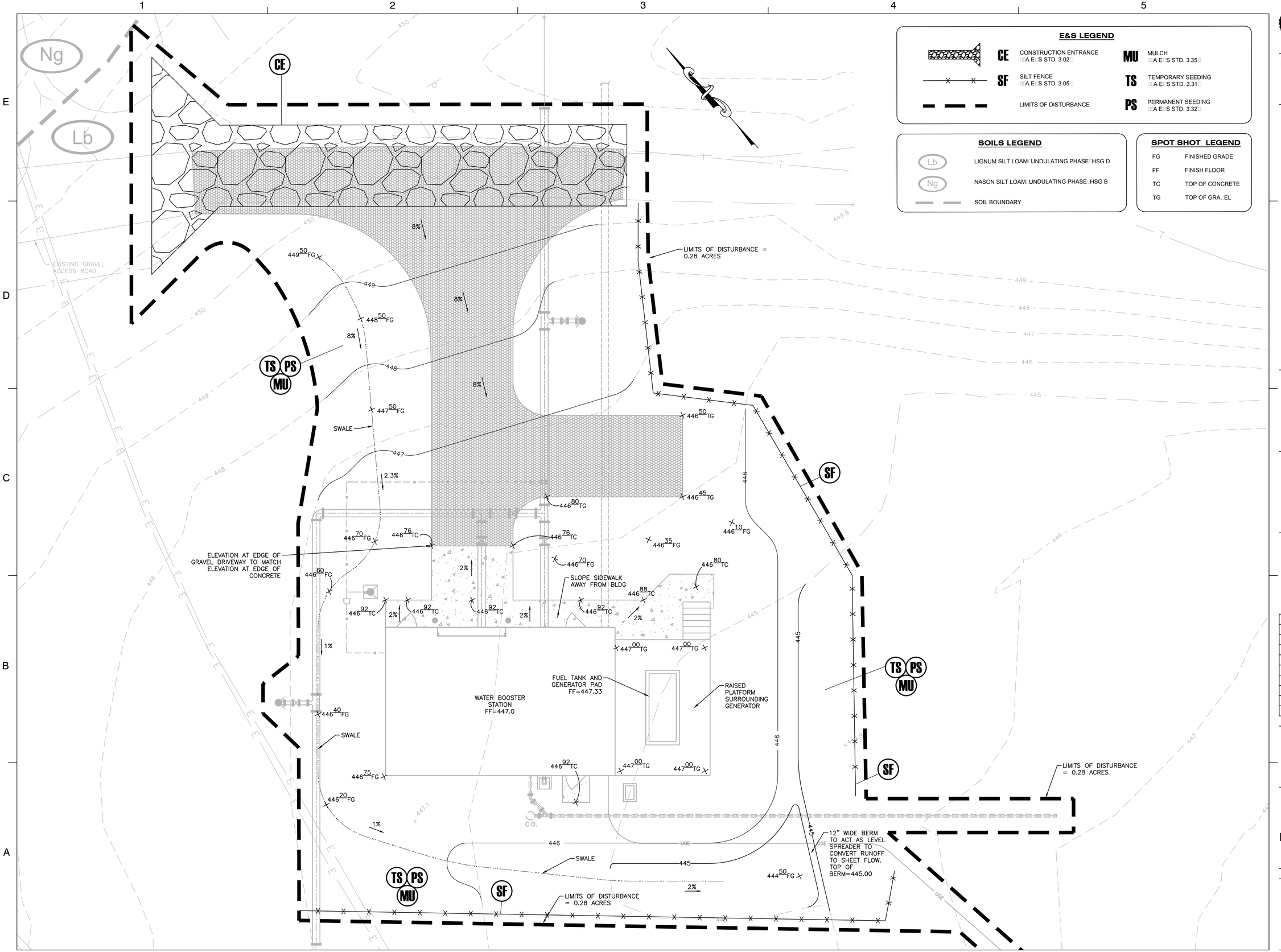

E&S LEGEND

CE	CONSTRUCTION ENTRANCE □A E□S STD. 3.02□	MU	MULCH □A E□S STD. 3.35□
SF	SILT FENCE □A E□S STD. 3.05□	TS	TEMPORARY SEEDING □A E□S STD. 3.31□
	LIMITS OF DISTURBANCE	PS	PERMANENT SEEDING □A E□S STD. 3.32□

SOILS LEGEND

Lb	LIGNUM SILT LOAM□UNDULATING PHASE□HSG D
Ng	NASON SILT LOAM□UNDULATING PHASE□HSG B
	SOIL BOUNDARY

SPOT SHOT LEGEND

FG	FINISHED GRADE
FF	FINISH FLOOR
TC	TOP OF CONCRETE
TG	TOP OF GRA□EL

Dewberry

Dewberry Engineers Inc.
4805 Lake Brook Drive, Suite 200
Glen Allen, Virginia 23060
PHONE: 804.290.7957
FAX: 804.290.7928
www.dewberry.com

ZION CROSSROADS WATER BOOSTER PUMP STATION AND WASTEWATER PUMP STATION

FLUVANNA COUNTY
DEPARTMENT OF PUBLIC WORKS

FLUVANNA COUNTY, VA

KEY PLAN

SEAL

COMMONWEALTH OF VIRGINIA
DANYLO A. VILLIHAUER
Lic. No. 046419
5/4/2018
PROFESSIONAL ENGINEER

SCALE

0' 6' 12'
GRAPHIC SCALE
1" = 6'

No.	DATE	BY	Description

REVISIONS

DRAWN BY	BMM & JEH
APPROVED BY	DAV
CHECKED BY	BJH
DATE	MAY 2018

TITLE

WBS GRADING AND EROSION & SEDIMENT CONTROL PLAN

PROJECT NO. 50078863

C2.2

EROSION & SEDIMENT CONTROL NARRATIVE

PROJECT DESCRIPTION
THIS PROJECT CONSISTS OF THE INSTALLATION OF A WATER BOOSTER STATION AT THE DEPARTMENT OF CORRECTIONS OFF OF RICHMOND ROAD. THE LIMITS OF DISTURBANCE ARE 0.31 ACRES. AN EXISTING GRAVEL ACCESS ROAD AT THE ENTRANCE TO THE CORRECTIONAL FACILITY WILL BE ENHANCED TO PROVIDE ADEQUATE ACCESS TO THE SITE.

EXISTING SITE CONDITIONS
STORM WATER IS GENERALLY CONVEYED OFF-SITE THROUGH OVERLAND FLOW. NO WETLANDS WILL BE AFFECTED BY THE CONSTRUCTION OF THE PROJECT. THE PROJECT AREA IS NOT LOCATED WITHIN A FLOODPLAIN AS SHOWN ON FEMA FIRM PANEL #51065C0060C, ZONE X DATED 05/16/2008. THE SITE IS GRASSY WITH SLOPES TO THE SOUTH AND EAST AT 2%-10% TOWARD AN EXISTING STORMWATER POND.

ADJACENT AREAS
THE PROJECT SITE IS SURROUNDED ON ALL SIDES BY THE FLUVANNA CORRECTIONAL CENTER FOR WOMEN. RICHMOND ROAD (RTE 250) IS ABOUT 75 FEET NORTH OF THE SITE.

OFF-SITE AREAS
NO OFF-SITE AREAS ARE ANTICIPATED WITH THIS PROJECT.

SOILS
ACCORDING TO ONLINE WEB BASED SOIL SURVEY BY THE NATURAL RESOURCES CONSERVATION SERVICE, UNITED STATES DEPARTMENT OF AGRICULTURE: THE FOLLOWING SOILS MAY BE FOUND WITHIN THE PROJECT LIMITS:

Lb IS A LIGNUM SILT LOAM, UNDULATING PHASE. THE EROSION HAZARD K FACTOR IS 0.55 AND IS HYDROLOGIC SOIL GROUP (HSG) D.

Ng IS NASON SILT LOAM, UNDULATING PHASE. THE EROSION HAZARD K FACTOR IS 0.43 AND IS HYDROLOGIC SOIL GROUP (HSG) B.

BOTH OF THESE SOILS ARE TYPICALLY FOUND ON SLOPES SLOPING 2 TO 8 PERCENT.

CRITICAL AREAS
CRITICAL AREAS ARE NOT ANTICIPATED WITH THIS PROJECT.

SOIL STOCKPILE AND BORROW AREAS
ALL SOIL STOCKPILES SHALL HAVE SILT FENCE ON ALL SIDES. STOCKPILES SHALL BE TEMPORARY/PERMANENTLY SEEDED DEPENDING ON TIME FRAME FOR REUSE OR REMOVAL OF SOIL MATERIAL. ALL ON-SITE BORROW AREAS (IF NECESSARY) SHALL BE DELINEATED ON PLAN BY CONTRACTOR. APPROPRIATE EROSION AND SEDIMENT CONTROL FEATURES (EX. SILT FENCE, SEDIMENT TRAPS/BASINS) SHALL BE INSTALLED DEPENDING ON LOCATIONS AND FIELD CONDITIONS.

STORMWATER NARRATIVE
FLUVANNA COUNTY IS NOT IN A CHESAPEAKE BAY PRESERVATION AREA, AND THE PROJECT CONSISTS OF LAND DISTURBANCE BETWEEN 10,000 SF AND 1 ACRE. THEREFORE, A STORMWATER MANAGEMENT PLAN IS NOT REQUIRED. HOWEVER, AN EROSION & SEDIMENT CONTROL PLAN IS REQUIRED AND HAS BEEN PREPARED.

MS-19 HAS BEEN MET BY PROVING THE DOWNSTREAM RECEIVING DITCH IS ADEQUATE FOR THE 2-YEAR STORM VELOCITY (NON-EROSIVE) AND 10-YEAR STORM CAPACITY (DEPTH).

EROSION AND SEDIMENT CONTROL MEASURES
THE PLAN HAS BEEN DEVELOPED TO MINIMIZE LAND DISTURBANCE. WHERE GRADING IS NECESSARY, ADEQUATE PRECAUTIONS SHALL BE TAKEN TO MINIMIZE EROSION AND TO CONTAIN SILT THROUGH PROPER EROSION AND SEDIMENT CONTROL PRACTICES. THE INTENT OF THIS EROSION AND SEDIMENT CONTROL PLAN IS TO GUIDE THE CONTRACTOR IN IMPLEMENTING ACCEPTABLE MEASURES, INFRASTRUCTURE, AND MAINTENANCE PROGRAMS THAT WILL MINIMIZE THE AMOUNT OF EROSION AND RESULTING SEDIMENT THAT WILL TAKE PLACE DURING THE CONSTRUCTION OF THIS PROJECT. ALL VEGETATIVE AND STRUCTURAL EROSION AND SEDIMENT CONTROL PRACTICES WILL BE CONSTRUCTED AND MAINTAINED ACCORDING TO THE MINIMUM STANDARDS AND SPECIFICATIONS OF THE VA EROSION & SEDIMENT CONTROL BOOK.

EROSION AND SEDIMENT CONTROL MEASURES
TEMPORARY CONSTRUCTION ENTRANCE (STD. & SPEC. 3.02):
TO REDUCE THE AMOUNT OF SOIL OR MUD BEING TRANSPORTED ONTO PUBLIC ROADS. INSTALL A STONE PAD LOCATED AT POINTS OF INGRESS AND EGRESS, USING VDOT #1 STONE. DIMENSIONS OF CONSTRUCTION ENTRANCE SHALL BE A MINIMUM OF 12 FEET WIDE BY 70 FEET LENGTH. A FILTER FABRIC LINER SHALL BE INSTALLED PRIOR TO THE PLACEMENT OF THE CONSTRUCTION ENTRANCE AGGREGATE AS SPECIFIED IN STATE MINIMUM STANDARD #17.

SILT FENCE (STD. & SPEC. 3.05):
A TEMPORARY SEDIMENT BARRIER TO CONTROL EROSION IN SHEET FLOW AND LOW FLOW CHANNEL SITUATIONS. SILT FENCE CONSISTS OF A SYNTHETIC FILTER FABRIC (USUALLY BLACK) ENTRENCHED 4" INTO THE GROUND, STRETCHED TIGHT AND ATTACHED TO SUPPORT POSTS SPACED 6 FEET APART.

TEMPORARY SEEDING (VESCH STD. & SPEC. 3.31):
THE ESTABLISHMENT OF A TEMPORARY VEGETATIVE COVER ON DISTURBED AREAS BY SEEDING WITH APPROPRIATE RAPIDLY GROWING ANNUAL PLANTS. TEMPORARY SEEDING REDUCES EROSION AND SEDIMENTATION BY STABILIZING DISTURBED AREAS THAT WILL NOT BE BROUGHT TO FINAL GRADE FOR A PERIOD OF MORE THAN 14 DAYS. TEMPORARY SEEDING REDUCES DAMAGE FROM SEDIMENT AND RUNOFF TO DOWNSTREAM OR OFF-SITE AREAS, AND TO PROVIDE PROTECTION TO BARE SOILS EXPOSED DURING CONSTRUCTION UNTIL PERMANENT VEGETATION OR OTHER EROSION CONTROL MEASURES CAN BE ESTABLISHED. FOR USE WHERE EXPOSED SOIL SURFACES WILL NOT BE AT FINAL GRADE FOR MORE THAN 14 DAYS. SUCH AREAS INCLUDED DENUDED AREAS, SOIL STOCKPILES, DIKES, DAMS, SIDES OF SEDIMENT BASINS, TEMPORARY ROADBANKS, ETC. (SEE MS#1 AND MS#2). A PERMANENT VEGETATIVE COVER SHALL BE APPLIED TO AREAS THAT WILL BE LEFT DORMANT FOR A PERIOD OF MORE THAN ONE (1) YEAR.

PERMANENT SEEDING (VESCH STD. & SPEC. 3.32):
THE ESTABLISHMENT OF A PERENNIAL VEGETATIVE COVER ON DISTURBED AREAS BY PLANTING SEED. PERMANENT SEEDING REDUCES EROSION AND DECREASES SEDIMENT YIELD FROM DISTURBED AREAS. PERMANENT SEEDING STABILIZES DISTURBED AREAS IN A MANNER THAT IS ECONOMICAL, ADAPTABLE TO SITE CONDITIONS, AND ALLOWS SELECTION OF THE MOST APPROPRIATE PLANT MATERIAL. PERMANENT SEEDING ALSO IMPROVES WILDLIFE HABITAT AND ENHANCES NATURAL BEAUTY. FOR USE IN DISTURBED AREAS WHERE PERMANENT, LONG-LIVED VEGETATIVE COVER IS NEEDED TO STABILIZE THE SOIL. FOR USE WHERE ROUGH-GRADED AREAS WHICH WILL NOT BE BROUGHT TO FINAL GRADE FOR A YEAR OR MORE.

MULCHING (VESCH STD. & SPEC. 3.35):
APPLICATION OF PLANT RESIDUES OR OTHER SUITABLE MATERIALS TO THE SOIL SURFACE. MULCHING PERVENTS EROSION BY PROTECTING THE SOIL SURFACE FROM RAINDROP IMPACT AND REDUCING THE VELOCITY OF OVERLAND FLOW. MULCHING FOSTERS THE GROWTH OF VEGETATION BY INCREASING AVAILABLE MOISTURE AND PROVIDING INSULATION AGAINST EXTREME HEAT AND COLD. FOR USE IN AREAS WHICH HAVE BEEN PERMANENTLY SEEDED. MULCHING SHOULD OCCUR IMMEDIATELY FOLLOWING SEEDING. AREAS THAT CANNOT BE SEEDED BECAUSE OF THE SEASON SHOULD BE MULCHED WITH AN ORGANIC MULCH.

TEMPORARY AND PERMANENT STABILIZATION
DURING CONSTRUCTION APPLY TEMPORARY AND/OR PERMANENT SEEDING AS GRADING OPERATIONS ARE COMPLETED IN AREAS NOT TO RECEIVE PAVEMENT, OR OTHER IMPERVIOUS SURFACES. POST CONSTRUCTION-APPLY TOPSOIL, PERMANENT SEEDING PER SPECIFICATIONS AND SOIL AMENDMENTS (AS NECESSARY) TO ALL DISTURBED SURFACES NOT RECEIVING PAVEMENT OR OTHER IMPERVIOUS SURFACE. TEMPORARY SEEDING SHALL BE APPLIED WITHIN SEVEN DAYS TO DENUDED AREAS THAT MAY NOT BE AT FINAL GRADE, BUT WILL REMAIN DORMANT FOR LONGER THAN 30 DAYS AND LESS THAN ONE YEAR. THIS INCLUDES, BUT IS NOT LIMITED TO, STOCKPILES AND BORROW AREAS. PERMANENT SEEDING SHALL BE APPLIED AND A PERENNIAL VEGETATIVE COVERING SHALL BE ESTABLISHED ON DISTURBED AREAS WITHIN SEVEN DAYS OF BEING BROUGHT TO FINAL GRADE ON AREAS NOT OTHERWISE PROTECTED. SELECTION OF THE SEED MIXTURE SHALL DEPEND ON THE TIME OF YEAR IT IS TO BE APPLIED. MULCHING SHALL BE APPLIED TO ALL PERMANENT SEEDING IMMEDIATELY UPON COMPLETION OF SEED APPLICATION. MULCH LIBERALLY DURING THE MID-SUMMER AND WINTER SEASONS.

SEE VIRGINIA EROSION AND SEDIMENT CONTROL TECHNICAL BULLETIN NO. 4, NUTRIENT MANAGEMENT FOR DEVELOPMENT SITES, FOR UPDATED SEED MIXTURES AND SCHEDULES AS WELL AS UPDATED LIMING, MULCHING, AND FERTILIZING REQUIREMENTS. SEE VIRGINIA EROSION AND SEDIMENT CONTROL HANDBOOK STD. AND SPEC. 3.35 FOR MULCHING SPECIFICATIONS.

EROSION & SEDIMENT CONTROL MAINTENANCE

IN GENERAL, THE PROJECT AREA SHALL BE CHECKED AFTER RAINFALL EVENT OR WEEKLY, WHICH EVER IS MORE FREQUENT TO ENSURE THAT ALL EROSION AND SEDIMENT CONTROL DEVICES ARE IN WORKING ORDER. EROSION CONTROL DEVICES SHALL BE MAINTAINED ACCORDING TO THE FOLLOWING SCHEDULE:

1. CONSTRUCTION ENTRANCE
   MAINTAIN ENTRANCE IN A CONDITION TO PREVENT TRACKING OR FLOW OF MUD ONTO PUBLIC RIGHTS-OF-WAY. ALL MATERIALS SPILLED, DROPPED, WASHED, OR TRACKED FROM VEHICLES ONTO ROADWAYS MUST BE IMMEDIATELY REMOVED.
2. SILT FENCE
   SEDIMENT DEPOSITS SHALL BE REMOVED WHEN DEPOSITS REACH APPROXIMATELY ONE-HALF THE HEIGHT OF THE BARRIER. FABRIC SHALL BE REPLACED IF IT HAS DECOMPOSED OR BECOME INEFFECTIVE.
3. MULCH
   INSPECT PERIODICALLY (PARTICULARLY AFTER RAINSTORMS) TO CHECK FOR EROSION. WHERE EROSION IS OBSERVED IN MULCHED AREAS, ADDITIONAL MULCH SHALL BE APPLIED.
4. SEEDING
   WHEN IT IS CLEAR THAT PLANTS HAVE NOT GERMINATED ON AN AREA OR HAVE DIED, THESE AREAS MUST BE RE-SEEDED IMMEDIATELY TO PREVENT EROSION DAMAGE. IT IS IMPORTANT TO DETERMINE THE REASON GERMINATION DID NOT TAKE PLACE AND MAKE ANY CORRECTIVE ACTIONS NECESSARY PRIOR TO RE-SEEDING THE AREA.

THE CONTRACTOR SHALL BE RESPONSIBLE FOR PROVIDING AN EMPLOYEE WHO WILL BE RESPONSIBLE IN CHARGE OF THE EROSION AND SEDIMENT CONTROL PLAN AND REQUIREMENTS FOR THE PROJECT THAT IS CERTIFIED BY THE VIRGINIA DEPARTMENT OF CONSERVATION AND RECREATION AS A RESPONSIBLE LAND DISTURBER (RLD). THE NAME OF THE CONTRACTOR'S RLD AND COPY OF HIS CURRENT CERTIFICATION SHALL BE PROVIDED TO THE OWNER, ENGINEER AND COUNTY INSPECTOR PRIOR TO PERFORMING ANY LAND DISTURBING ACTIVITY.
NO EROSION AND SEDIMENT CONTROL MEASURES SHALL BE REMOVED WITHOUT APPROVAL OF THE ENGINEER OR COUNTY INSPECTOR FOR THE PROJECT.
DISPOSAL OF SEDIMENTS SHALL BE IN AN APPROVED LOCATION.

EROSION & SEDIMENT CONTROL SEQUENCE

GENERAL NOTES:
1. ALL EROSION CONTROL MEASURES SHALL BE INSTALLED AND MAINTAINED IN ACCORDANCE WITH THE LATEST EDITION OF THE VIRGINIA EROSION AND SEDIMENT CONTROL HANDBOOK (VESCH).
2. CONTRACTOR MAY COMPLETE CONSTRUCTION-RELATED ACTIVITIES CONCURRENTLY ONLY IF ALL PRECEDING ESC MEASURES HAVE BEEN COMPLETELY INSTALLED.
3. THE ACTUAL SCHEDULE FOR IMPLEMENTING ESC MEASURES WILL BE DETERMINED BY PROJECT CONSTRUCTION PROGRESS.
4. NO ESC MEASURE(S) SHALL BE REMOVED WITHOUT APPROVAL OF COUNTY ESC INSPECTOR FOR THE PROJECT.
5. ADDITIONAL ESC MEASURES MAY BE REQUIRED DUE TO SITE CONDITIONS AT TIME OF CONSTRUCTION ACTIVITY. CONTRACTOR SHALL PROVIDE ANY ADDITIONAL ESC MEASURES AS NEED TO CONTROL SEDIMENT RUN-OFF AT NO ADDITIONAL COST TO OWNER.
6. CONTRACTOR MAY LOCATE STOCKPILES FOR TOPSOIL, SUITABLE FILL WITHIN LIMITS OF CONSTRUCTION. CONTRACTOR SHALL ENCIRCLE STOCK PILE WITH SILT FENCE, TEMPORARY/PERMANENTLY SEED AND MAINTAIN THE STOCKPILE PER THE VESCH.
7. CONTRACTOR SHALL PERFORM CONSTRUCTION SEQUENCING SUCH THAT EARTH MATERIALS ARE EXPOSED FOR THE LEAST AMOUNT OF TIME BEFORE THEY ARE COVERED, SEEDED OR OTHERWISE STABILIZED TO PREVENT EROSION.

SEQUENCE:
1. COUNTY INSPECTOR MUST BE NOTIFIED ONE WEEK PRIOR TO THE COMMENCEMENT OF LAND DISTURBING ACTIVITIES AND ONE WEEK PRIOR TO THE FINAL INSPECTION.
1. INSTALL CONSTRUCTION ENTRANCE AND SILT FENCE (CLEARING ONLY THOSE AREAS NECESSARY TO INSTALL MEASURES).
2. BEGIN CLEARING AND GRUBBING THE SITE. ONLY AREAS OF THE SITE THAT DRAIN TO PROPERLY INSTALLED ESC MEASURE(S) MAY BE CLEARED AND GRUBBED.
3. ROUGH GRADE WATER BOOSTER STATION PAD AREA AS SHOWN ON GRADING PLAN.
4. TEMPORARILY SEED AND MULCH, THROUGHOUT CONSTRUCTION AND WITHIN 7 DAYS, DENUDED AREAS THAT WILL BE INACTIVE FOR 14 DAYS OR MORE.
5. START INSTALLATION OF WATER BOOSTER STATION.
6. COMPLETE FINE GRADING AND INSTALLATION OF PERMANENT STABILIZATION OVER ALL DISTURBED AREAS.
7. PERMANENTLY STABILIZE AREAS TO BE VEGETATED (TOPSOIL, SEED AND MULCH) AS THEY ARE BROUGHT TO FINAL GRADE.
8. ALL EXISTING DENUDED/UNSTABILIZED AREAS WITHIN PROJECT AREA NOT OTHERWISE IMPROVED SHALL BE STABILIZED, PERMANENTLY SEEDED AND MULCHED.

EROSION & SEDIMENT CONTROL NOTES

ES-1: UNLESS OTHERWISE INDICATED, ALL VEGETATIVE AND STRUCTURAL EROSION AND SEDIMENT CONTROL PRACTICES WILL BE CONSTRUCTED AND MAINTAINED ACCORDING TO MINIMUM STANDARDS AND SPECIFICATIONS OF THE VIRGINIA EROSION AND SEDIMENT CONTROL HANDBOOK AND THE VIRGINIA EROSION AND SEDIMENT CONTROL REGULATIONS (4VAC50-30).

ES-2: THE PLAN-APPROVING AUTHORITY MUST BE NOTIFIED ONE WEEK PRIOR TO THE PRE-CONSTRUCTION CONFERENCE, ONE WEEK PRIOR TO THE COMMENCEMENT OF LAND DISTURBING ACTIVITY, AND ONE WEEK PRIOR TO THE FINAL INSPECTION. THE NAME OF THE RESPONSIBLE LAND DISTURBER MUST BE PROVIDED TO THE PLAN-APPROVING AUTHORITY PRIOR TO ACTUAL ENGAGEMENT IN THE LAND-DISTURBING ACTIVITY SHOWN ON THE APPROVED PLAN. IF THE NAME IS NOT PROVIDED PRIOR TO ENGAGING IN THE LAND-DISTURBING ACTIVITY, THE PLAN'S APPROVAL WILL BE REVOKED.

ES-3: ALL EROSION AND SEDIMENT CONTROL MEASURES ARE TO BE PLACED PRIOR TO OR AS THE FIRST STEP IN CLEARING.

ES-4: A COPY OF THE APPROVED EROSION AND SEDIMENT CONTROL PLAN SHALL BE MAINTAINED ON THE SITE AT ALL TIMES.

ES-5: PRIOR TO COMMENCING LAND DISTURBING ACTIVITIES IN AREAS OTHER THAN INDICATED ON THESE PLANS (INCLUDING, BUT NOT LIMITED TO, OFF-SITE BORROW OR WASTE AREAS), THE CONTRACTOR SHALL SUBMIT A SUPPLEMENTARY EROSION CONTROL PLAN TO THE OWNER FOR REVIEW AND APPROVAL BY THE PLAN-APPROVING AUTHORITY.

ES-6: THE CONTRACTOR IS RESPONSIBLE FOR INSTALLATION OF ANY ADDITIONAL EROSION CONTROL MEASURES NECESSARY TO PREVENT EROSION AND SEDIMENTATION AS DETERMINED BY THE PLAN-APPROVING AUTHORITY.

ES- 7: ALL DISTURBED AREAS ARE TO DRAIN TO APPROVED SEDIMENT CONTROL MEASURES AT ALL TIMES DURING LAND DISTURBING ACTIVITIES AND DURING SITE DEVELOPMENT UNTIL FINAL STABILIZATION IS ACHIEVED, AFTER WHICH, UPON APPROVAL OF THE PLAN-APPROVING AUTHORITY, THE CONTROLS SHALL BE REMOVED. TRAPPED SEDIMENT AND THE DISTURBED SOIL AREAS RESULTING FROM THE REMOVAL OF TEMPORARY MEASURES SHALL BE PERMANENTLY STABILIZED TO PREVENT FURTHER EROSION AND SEDIMENTATION.

ES-8: DURING DEWATERING OPERATIONS, WATER SHALL BE PUMPED INTO AN APPROVED FILTERING DEVICE.

ES-9: THE CONTRACTOR SHALL INSPECT ALL EROSION CONTROL MEASURES AT LEAST EVERY 2 WEEKS AND IMMEDIATELY AFTER EACH RUNOFF-PRODUCING RAINFALL EVENT. ANY NECESSARY REPAIRS OR CLEANUP TO MAINTAIN THE EFFECTIVENESS OF THE EROSION CONTROL DEVICES SHALL BE MADE IMMEDIATELY.

ES-10: THE CONTRACTOR IS RESPONSIBLE FOR THE DAILY REMOVAL OF SEDIMENT THAT HAS BEEN TRANSPORTED ONTO A PAVED OR PUBLIC ROAD SURFACE.

ES-11: SEEDING OPERATIONS SHALL BE INITIATED WITHIN 7 DAYS AFTER REACHING FINAL GRADE OR UPON SUSPENSION OF GRADING OPERATIONS FOR ANTICIPATED DURATION OF GREATER THAN 30 DAYS OR UPON COMPLETION OF GRADING OPERATIONS FOR A SPECIFIC AREA.

ES-12: THE CONTRACTOR SHALL BE RESPONSIBLE FOR PREVENTING SURFACE AND AIR MOVEMENT OF DUST FROM EXPOSED SOILS WHICH MAY PRESENT HEALTH HAZARDS, TRAFFIC SAFETY PROBLEMS, OR HARM ANIMAL OR PLANT LIFE.

ES-13: A VIRGINIA STORMWATER MANAGEMENT PROGRAM PERMIT (VSMPP) FOR THE DISCHARGE OF STORMWATER FROM CONSTRUCTION ACTIVITIES IS REQUIRED FOR PROJECTS DISTURBING 1 ACRE OR GREATER. A VSMPP IS ALSO REQUIRED FOR PROJECTS DISTURBING 2,500 SQUARE FEET OR GREATER IN A DESIGNATED CHESAPEAKE BAY PRESERVATION AREA. VISIT THE VIRGINIA STORMWATER MANAGEMENT PROGRAM PERMITTING WEB PAGE AT HTTP://WWW.DEQ.VIRGINIA.GOV/PROGRAMS/WATER/STORMWATERMANAGEMENT/VSMPPERMITS.ASPX FOR MORE INFORMATION.

MINIMUM STANDARDS

MS-1. PERMANENT OR TEMPORARY SOIL STABILIZATION SHALL BE APPLIED TO DENUDED AREAS WITHIN SEVEN DAYS AFTER FINAL GRADE IS REACHED ON ANY PORTION OF THE SITE. TEMPORARY SOIL STABILIZATION SHALL BE APPLIED WITHIN SEVEN DAYS TO DENUDED AREAS THAT MAY NOT BE AT FINAL GRADE BUT WILL REMAIN DORMANT (UNDISTURBED) FOR LONGER THAN 30 DAYS. PERMANENT STABILIZATION SHALL BE APPLIED TO AREAS THAT ARE TO BE LEFT DORMANT FOR MORE THAN ONE YEAR.

MS-2. DURING CONSTRUCTION OF THE PROJECT, SOIL STOCK PILES SHALL BE STABILIZED OR PROTECTED WITH SEDIMENT TRAPPING MEASURES. THE CONTRACTOR IS RESPONSIBLE FOR THE TEMPORARY PROTECTION AND PERMANENT STABILIZATION OF ALL SOIL STOCKPILES ON SITE AS WELL AS SOIL INTENTIONALLY TRANSPORTED FROM THE PROJECT SITE.

MS-3. A PERMANENT VEGETATIVE COVER SHALL BE ESTABLISHED ON DENUDED AREAS NOT OTHERWISE PERMANENTLY STABILIZED. PERMANENT VEGETATION SHALL NOT BE CONSIDERED ESTABLISHED UNTIL A GROUND COVER IS ACHIEVED THAT, IN THE OPINION OF DCR/DSWC, IS UNIFORM, MATURE ENOUGH TO SURVIVE AND WILL INHIBIT EROSION.

MS-4. SEDIMENT BASINS AND TRAPS, PERIMETER DIKES, SEDIMENT BARRIERS AND OTHER MEASURES INTENDED TO TRAP SEDIMENT SHALL BE CONSTRUCTED AS A FIRST STEP IN ANY LAND-DISTURBING ACTIVITY AND SHALL BE MADE FUNCTIONAL BEFORE UPSLOPE LAND DISTURBANCE TAKES PLACE.

MS-5. STABILIZATION MEASURES SHALL BE APPLIED TO EARTHEN STRUCTURES SUCH AS DAMS, DIKES AND DIVERSIONS IMMEDIATELY AFTER INSTALLATION.

MS-6. SURFACE RUNOFF FROM DISTURBED AREAS THAT IS COMPRISED OF FLOW FROM DRAINAGE AREAS GREATER THAN OR EQUAL TO THREE ACRES SHALL BE CONTROLLED BY A SEDIMENT BASIN. THE SEDIMENT BASIN SHALL BE DESIGNED AND CONSTRUCTED TO ACCOMMODATE THE ANTICIPATED SEDIMENT LOADING FROM THE LAND-DISTURBING ACTIVITY. THE OUTFALL DEVICE OR SYSTEM DESIGN SHALL TAKE INTO ACCOUNT THE TOTAL DRAINAGE AREA FLOWING THROUGH THE DISTURBED AREA TO BE SERVED BY THE BASIN.

MS-7. CUT AND FILL SLOPES SHALL BE DESIGNED AND CONSTRUCTED IN A MANNER THAT WILL MINIMIZE EROSION. SLOPES THAT ARE FOUND TO BE ERODING EXCESSIVELY WITHIN ONE YEAR OF PERMANENT STABILIZATION SHALL BE PROVIDED WITH ADDITIONAL SLOPE STABILIZING MEASURES UNTIL THE PROBLEM IS CORRECTED.

MS-8. CONCENTRATED RUNOFF SHALL NOT FLOW DOWN CUT OR FILL SLOPES UNLESS CONTAINED WITHIN AN ADEQUATE TEMPORARY OR PERMANENT CHANNEL, FLUME OR SLOPE DRAIN STRUCTURE.

MS-9. WHENEVER WATER SEEPS FROM A SLOPE FACE, ADEQUATE DRAINAGE OR OTHER PROTECTION SHALL BE PROVIDED.

MS-10. ALL STORM SEWER INLETS THAT ARE MADE OPERABLE DURING CONSTRUCTION SHALL BE PROTECTED SO THAT SEDIMENT-LADEN WATER CANNOT ENTER THE CONVEYANCE SYSTEM WITHOUT FIRST BEING FILTERED OR OTHERWISE TREATED TO REMOVE SEDIMENT.

MS-11. BEFORE NEWLY CONSTRUCTED STORMWATER CONVEYANCE CHANNELS ARE MADE OPERATIONAL, ADEQUATE OUTLET PROTECTION AND ANY REQUIRED TEMPORARY OR PERMANENT CHANNEL LINING SHALL BE INSTALLED IN BOTH THE CONVEYANCE CHANNEL AND RECEIVING CHANNEL.

MS-12. WHEN WORK IN A LIVE WATERCOURSE IS PERFORMED, PRECAUTIONS SHALL BE TAKEN TO MINIMIZE ENCROACHMENT, CONTROL SEDIMENT TRANSPORT AND STABILIZE THE WORK AREA TO THE GREATEST EXTENT POSSIBLE DURING CONSTRUCTION. NONERODIBLE MATERIAL SHALL BE USED FOR THE CONSTRUCTION OF CAUSEWAYS AND COFFERDAMS. EARTHEN FILL MAY BE USED FOR THESE STRUCTURES IF ARMORED BY NONERODIBLE COVER MATERIALS.

MS-13. WHEN A LIVE WATERCOURSE MUST BE CROSSED BY CONSTRUCTION VEHICLE MORE THAN TWICE IN ANY SIX MONTH PERIOD, A TEMPORARY STREAM CROSSING CONSTRUCTED OF NONERODIBLE MATERIAL SHALL BE PROVIDED.

MS-14. ALL APPLICABLE FEDERAL, STATE AND LOCAL REGULATIONS PERTAINING TO WORKING IN OR CROSSING LIVE WATERCOURSES SHALL BE MET.

MS-15. THE BED AND BANKS OF A WATERCOURSE SHALL BE STABILIZED IMMEDIATELY AFTER WORK IN THE WATER COURSE IS COMPLETED.

MS-16. NO MORE THAN 500 LINEAR FEET OF TRENCH MAY BE OPENED AT ONE TIME. ALL TRENCHES ARE TO BE BACKFILLED EACH DAY, SEEDED AND MULCHED IMMEDIATELY. IN THE EVENT THAT TRENCHES CANNOT BE BACKFILLED IMMEDIATELY, EROSION CONTROL MEASURES WILL BE INSTALLED.

MS-17. WHERE CONSTRUCTION VEHICLE ACCESS ROUTES INTERSECT PAVED PUBLIC ROADS, PROVISIONS SHALL BE MADE TO MINIMIZE THE TRANSPORT OF SEDIMENT BY VEHICULAR TRACKING ONTO THE PAVED SURFACE. WHERE SEDIMENT IS TRANSPORTED ONTO A PUBLIC ROAD SURFACE, THE ROAD SHALL BE CLEANED THOROUGHLY AT THE END OF EACH DAY. SEDIMENT SHALL BE REMOVED FROM THE ROADS BY SHOVELING OR SWEEPING AND TRANSPORTED TO A SEDIMENT CONTROL DISPOSAL AREA. STREET WASHING SHALL BE ALLOWED ONLY AFTER SEDIMENT IS REMOVED IN THIS MANNER.

MS-18. ALL TEMPORARY EROSION CONTROL MEASURES SHALL BE REMOVED WITHIN 30 DAYS AFTER FINAL SITE STABILIZATION IS ACHIEVED, AS DETERMINED BY THE DEPARTMENT OF CONSERVATION AND RECREATION, DIVISION OF SOIL AND WATER CONSERVATION. TRAPPED SEDIMENT AND THE DISTURBED SOIL AREAS RESULTING FROM THE DISPOSITION OF TEMPORARY MEASURES SHALL BE PERMANENTLY STABILIZED TO PREVENT FURTHER EROSION AND SEDIMENTATION.

MS-19. PROPERTIES AND WATERWAYS DOWNSTREAM FROM DEVELOPMENT SITES SHALL BE PROTECTED FROM SEDIMENT DEPOSITION, EROSION AND DAMAGE DUE TO INCREASES IN VOLUME, VELOCITY AND PEAK FLOW RATE OF STORMWATER RUNOFF. (SEE VIRGINIA REGULATIONS 4VAC50-30 EROSION AND SEDIMENT CONTROL REGULATIONS.)

LIMITS OF DISTURBANCE = 0.31 ACRES

Dewberry

Dewberry Engineers Inc.
4805 Lake Brook Drive, Suite 200
Glen Allen, Virginia 23060
PHONE: 804.290.7957
FAX: 804.290.7928
www.dewberry.com

ZION CROSSROADS
WATER BOOSTER PUMP STATION
AND WASTEWATER PUMP STATION

FLUVANNA COUNTY
DEPARTMENT OF PUBLIC WORKS

FLUVANNA COUNTY, VA

KEY PLAN

SEAL
COMMONWEALTH OF VIRGINIA
DANYLO A. VILLIHAUER
Lic. No. 046419
5/4/2018
PROFESSIONAL ENGINEER

SCALE

No.	DATE	BY	Description

REVISIONS

DRAWN BY	BMM & JEH
APPROVED BY	DAV
CHECKED BY	BJH
DATE	MAY 2018

TITLE
WBS
EROSION & SEDIMENT
CONTROL
NOTES

PROJECT NO. 50078863

C2.3

BOS 2019-01-09 p.1437/1491

TABLE 3.35–A
ORGANIC MULCH MATERIALS AND APPLICATION RATES

MULCHES:	RATES: PER ACRE	RATES: PER 1000 SQ. FT.	NOTES:
STRAW OR HAY	1½ – 2 TONS (MINIMUM 2 TONS FOR WINTER COVER)	70–90 LBS.	FREE FROM WEEDS AND COARSE MATTER. MUST BE ANCHORED. SPREAD WITH MULCH BLOWER OR BY HAND.
FIBER MULCH	MINIMUM 1500 LBS.	35 LBS.	DO NOT USE AS MULCH FOR WINTER COVER OR DURING HOT, DRY PERIODS.* APPLY AS SLURRY.
CORN STALKS	4 – 6 TONS	185–275 LBS.	CUT OR SHREDDED IN 4–6" LENGTHS. AIR–DRIED. DO NOT USE IN FINE TURF AREAS. APPLY WITH MULCH BLOWER OF BY HAND.
WOOD CHIPS	4 – 6 TONS	185–275 LBS.	FREE OF COARSE MATTER. AIR–DRIED. TREAT WITH 12 LBS NITROGEN PER TON. DO NOT USE IN FINE TURF AREAS. APPLY WITH MULCH BLOWER, CHIP HANDLER, OR BY HAND.
BARK CHIPS OR SHREDDED BARK	50 – 70 CU. YDS.	1–2 CU. YDS.	FREE COARSE MATTER. AIR–DRIED. DO NOT USE IN FINE TURF AREAS. APPLY WITH MULCH BLOWER, CHIP HANDLER, OR BY HAND.

* WHEN FIBER MULCH IS THE ONLY AVAILABLE MULCH DURING PERIODS WHEN STRAW SHOULD BE USED, APPLY AT A MINIMUM RATE OF 2000 LBS./AC. OR 45 LBS./1000 SQ. FT.

MU MULCHING

TABLE 3.31–B
ACCEPTABLE TEMPORARY SEEDING PLANT MATERIALS
"QUICK REFERENCE FOR ALL REGIONS"

PLANTING DATES	SPECIES	RATE (LBS./ACRE)
SEPT. 1 – FEB 15	50/50 MIX OF ANNUAL RYEGRASS (LOLIUM MULTI–FLORUM) & CEREAL (WINTER) RYE (SECALE CEREALE)	50–100
FEB. 16 – APR. 30	ANNUAL RYEGRASS (LOLIUM MULTI–FLORUM)	60–100
MAY 1 – AUG 31	GERMAN MILLET (SETARIA ITALICA)	50

FERTILIZER & LIME

- APPLY 10–20–10 FERTILIZER AT A RATE OF 600 lbs./acre (OR 14 lbs./1,000 sq. ft.)
- LIME AND FERTILIZER SHALL BE INCORPORATED INTO THE TOP 2 TO 4 INCHES OF THE SOIL IF POSSIBLE.

TS TEMPORARY SEEDING SPECIFICATIONS FOR ALL REGIONS
TABLE 3.31–B
(REVISED JUNE 2003)

CONSTRUCTION OF A SILT FENCE
(WITHOUT WIRE SUPPORT)

1. SET THE STAKES.
2. EXCAVATE A 4"x 4" TRENCH UPSLOPE ALONG THE LINE OF STAKES.
3. STAPLE FILTER MATERIAL TO STAKES AND EXTEND IT INTO THE TRENCH.
4. BACKFILL AND COMPACT THE EXCAVATED SOIL

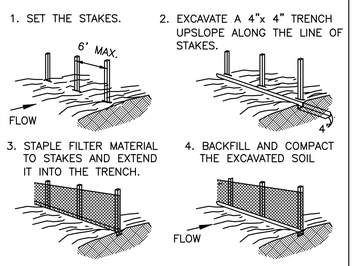

SHEET FLOW INSTALLATION
(PERSPECTIVE VIEW)

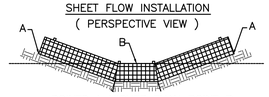

POINTS A HIGHER THAN POINT B
PLACEMENT IN DRAINAGE WAY
(FRONT ELEVATION)

SF SILT FENCE
NOT TO SCALE

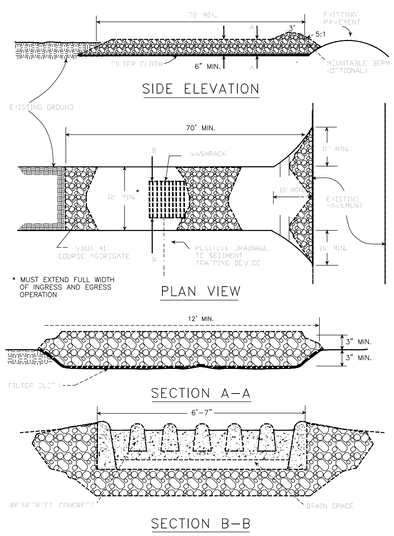

SOURCE: ADAPTED from 1983 Maryland Standards for Soil erosion and Sediment Control, and Va. DSWC — Plate 3.02–1

CE STONE CONSTRUCTION ENTRANCE

SEED[1]		
LAND USE	SPECIES	APPLICATION PER ACRE
MINIMUM CARE LAWN (COMMERCIAL OR RESIDENTIAL)	TALL FESCUE[1] PERENNIAL RYEGRASS KENTUCKY BLUEGRASS[1]	95–100% 0–5% 0–5% TOTAL: 175–200 LBS.
HIGH–MAINTENANCE LAWN	TALL FESCUE[1]	TOTAL: 200–250 LBS.
GENERAL SLOPE (3:1 OR LESS)	TALL FESCUE RED TOP GRASS OR CREEPING RED FESCUE SEASONAL NURSE CROP	128 LBS. 2 LBS. 20 LBS. TOTAL: 150 LBS.
LOW MAINTENANCE SLOPE (STEEPER THAN 3:1)	TALL FESCUE RED TOP GRASS OR CREEPING RED FESCUE[2] SEASONAL NURSE CROP CROWNVETCH[3]	128 LBS. 2 LBS. 20 LBS. TOTAL: 150 LBS.

1–WHEN SELECTING VARIETIES OF TURFGRASS, USE THE VIRGINIA CROP IMPROVEMENT ASSOCIATION (VCIA) RECOMMENDED TURFGRASS VARIETY LIST. QUALITY SEED WILL BEAR A LABEL INDICATING THAT THEY ARE APPROVED BY VCIA. A CURRENT TURFGRASS VARIETY LIST IS AVAILABLE AT THE LOCAL COUNTY EXTENSION OFFICE OR THROUGH VCIA AT 804.746.4884 OR AT http://sudan.cses.vt.edu/html/Turf/turf/publications/publications2.html

2–USE SEASONAL NURSE CROP IN ACCORDANCE WITH SEEDING DATES AS STATED BELOW:

FEBRUARY 16 – APRIL 30.....	ANNUAL RYE
MAY 1 – AUGUST 15.....	FOXTAIL MILLET
AUGUST 16 – OCTOBER 31.....	ANNUAL RYE
NOVEMBER 1 – FEBRUARY 15.....	WINTER RYE

3–SUBSTITUTE SERICEA LESPEDEZA FOR CROWNVETCH EAST OF FARMVILLE, VA (MAY THROUGH SEPTEMBER USE HULLED SEED, ALL OTHER PERIODS, USE UNHULLED SERICEA). IF FLATPEA IS USED, INCREASE RATE TO 30 LBS/ACRE. IF WEEPING LOVEGRASS IS USED, INCLUDE IN ANY SLOPE OR LOW MAINTENANCE MIXTURE DURING WARMER SEEDING PERIODS, INCREASE TO 30–40.

FERTILIZER & LIME

- APPLY 10–20–10 FERTILIZER AT A RATE OF 1000 lbs./acre (OR 23 lbs./1,000 sq. ft.)
- LIME AND FERTILIZER SHALL BE INCORPORATED INTO THE TOP 4 TO 6 INCHES OF THE SOIL BY DISCING OR OTHER MEANS WHENEVER POSSIBLE.

NOTE:
1.)A SOIL TEST IS NECESSARY TO DETERMINE THE ACTUAL AMOUNT OF LIME REQUIRED TO ADJUST THE SOIL pH OF SITE.
2.)WHEN APPLYING SLOWLY AVAILABLE NITROGEN USE RATES AVAILABLE IN EROSION & SEDIMENT CONTROL TECHNICAL BULLETIN #4, 2003 NUTRIENT MANAGEMENT FOR DEVELOPMENT SITES AT: http://ww.dcr.state.va.us/sw/e&s.htm#pubs

PS PERMANENT SEEDING SPECIFICATIONS FOR PIEDMONT AREA

Dewberry

Dewberry Engineers Inc.
4805 Lake Brook Drive, Suite 200
Glen Allen, Virginia 23060
PHONE: 804.290.7957
FAX: 804.290.7928
www.dewberry.com

ZION CROSSROADS
WATER BOOSTER PUMP STATION
AND WASTEWATER PUMP STATION
FLUVANNA COUNTY
DEPARTMENT OF PUBLIC WORKS
FLUVANNA COUNTY, VA.

KEY PLAN

SEAL
COMMONWEALTH OF VIRGINIA
DANYLO A. VILLIHAUER
Lic. No. 046419
5/4/2018
PROFESSIONAL ENGINEER

SCALE

No.	DATE	BY	Description

REVISIONS

DRAWN BY	BMM & JEH
APPROVED BY	DAV
CHECKED BY	BJH
DATE	MAY 2018

TITLE
WBS
EROSION & SEDIMENT CONTROL DETAILS

PROJECT NO. 50078863

C2.4

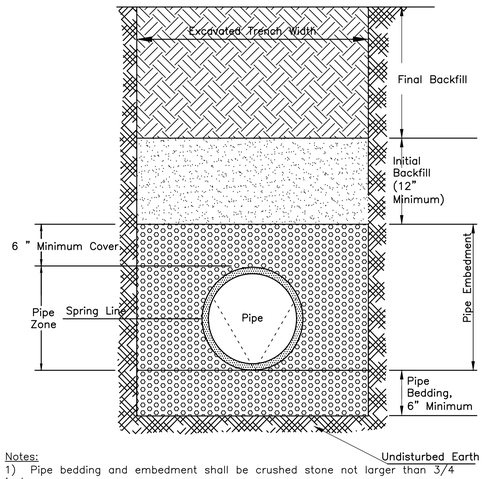

Notes:
1) Pipe bedding and embedment shall be crushed stone not larger than 3/4 inch.
2) Initial backfill shall be loose soil free of foreign materials, frozen soil and stones larger than 3 inches in their greatest dimension.
3) Final backfill shall be loose soil free of foreign materials, frozen soil, and stones larger than 8 inches in their greatest dimension.
4) The top 6" (to finished grade) of final backfill shall meet the requirements for Initial Backfill.
5) Installation of plastic pipe shall, in addition to the above, conform to ANSI/AWWA C605-94.

GN-02

F[illegible] C[illegible] D[illegible]
Not to Scale
P[illegible] E[illegible] B[illegible] P[illegible]
Revised: 03/20/2014

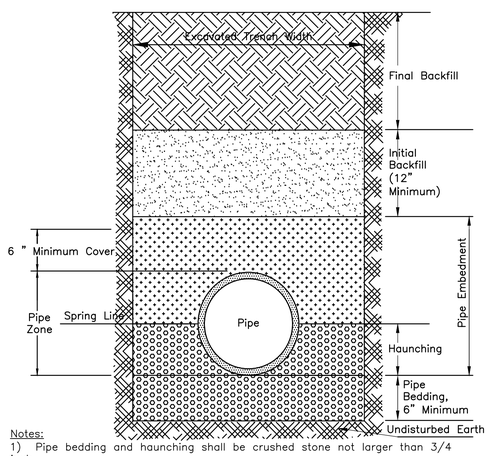

Notes:
1) Pipe bedding and haunching shall be crushed stone not larger than 3/4 inch.
2) Pipe embedment shall be crushed stone not larger than 3/4 inch, or loose soil free of stones larger than 1 inch in their greatest dimension.
3) Initial backfill shall be loose soil free of foreign materials, frozen soil and stones larger than 3 inches in their greatest dimension.
4) Final backfill shall be loose soil free of foreign materials, frozen soil, and stones larger than 8 inches in their greatest dimension.
5) The top 6" (to finished grade) of final backfill shall meet the requirements for Initial Backfill.
6) Installation of DIP shall, in addition to the above, conform to ANSI/AWWA C600-99.

GN-01

F[illegible] C[illegible] D[illegible]
Not to Scale
P[illegible] E[illegible] B[illegible]
Revised: 03/20/2014

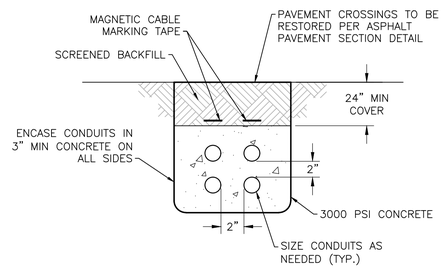

NOTES

1. FOR NON-PAVED SECTIONS BACKFILL WITH SUITABLE SOILS REMOVED FROM TRENCH AND COMPACT TO 95% STD DENSITY.
2. PROVIDE (4) 2" CONDUITS: ELECTRICAL FEED, FIBER OPTIC, (2) SPARES.

ELECTRICAL DUCTBANK - SECTION

N.T.S. Source: Dewberry

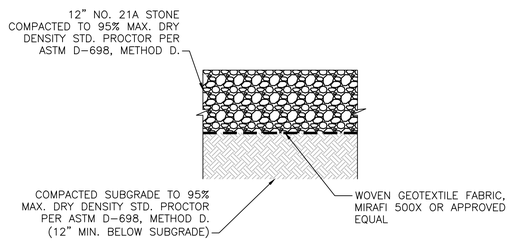

GRAVEL SECTION

N.T.S. Source: Dewberry

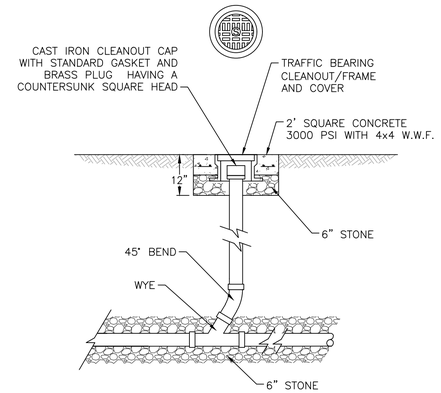

CLEANOUT DETAIL

N.T.S. Source: Dewberry

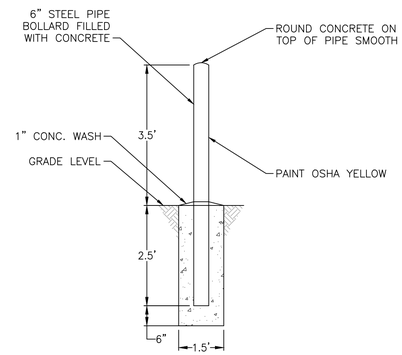

PIPE BOLLARD TYPE

N.T.S. Source: Dewberry

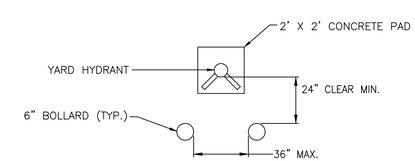

TYPICAL HYDRANT PROTECTION

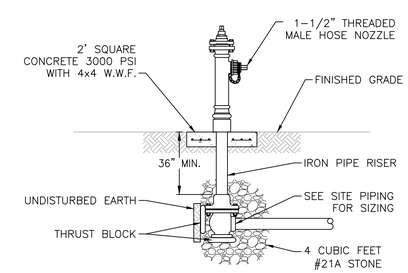

YARD HYDRANT

N.T.S. Source: Dewberry

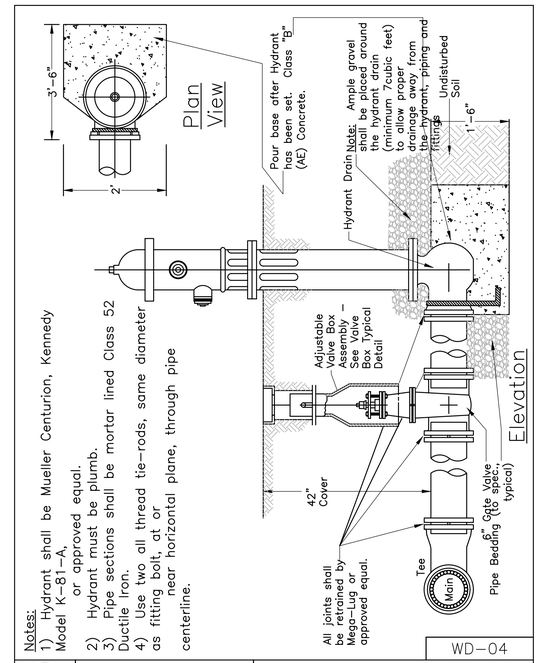

Notes:
1) Hydrant shall be Mueller Centurion, Kennedy Model K-81-A, or approved equal.
2) Hydrant must be plumb.
3) Pipe sections shall be mortar lined Class 52 Ductile Iron.
4) Use two all thread tie-rods, same diameter as fitting bolt at or near horizontal plane, through pipe centerline.

WD-04

F[illegible] C[illegible] D[illegible]
W[illegible]r D[illegible] S[illegible]
T[illegible] F[illegible] H[illegible]

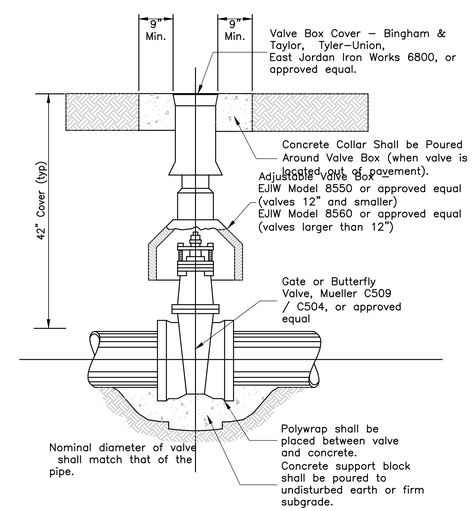

GN-03

F[illegible] C[illegible] D[illegible]
T[illegible] G[illegible]
[illegible]d [illegible] B[illegible]
Not to Scale
Revised: 03/20/2014

BOS 2019-01-09 p.1438/1491

Dewberry

Dewberry Engineers Inc.
4805 Lake Brook Drive, Suite 200
Glen Allen, Virginia 23060
PHONE: 804.290.7957
FAX: 804.290.7928
www.dewberry.com

ZION CROSSROADS
WATER BOOSTER PUMP STATION
AND WASTEWATER PUMP STATION
FLUVANNA COUNTY
DEPARTMENT OF PUBLIC WORKS
FLUVANNA COUNTY, VA

KEY PLAN

SEAL

COMMONWEALTH OF VIRGINIA
DANYLO A. VILLIHAUER
Lic. No. 046419
5/4/2018
PROFESSIONAL ENGINEER

SCALE

No.	DATE	BY	Description

REVISIONS

DRAWN BY	BMM & JEH
APPROVED BY	DAV
CHECKED BY	BJH
DATE	MAY 2018

TITLE

WBS DETAILS

PROJECT NO. 50078863

C2.5

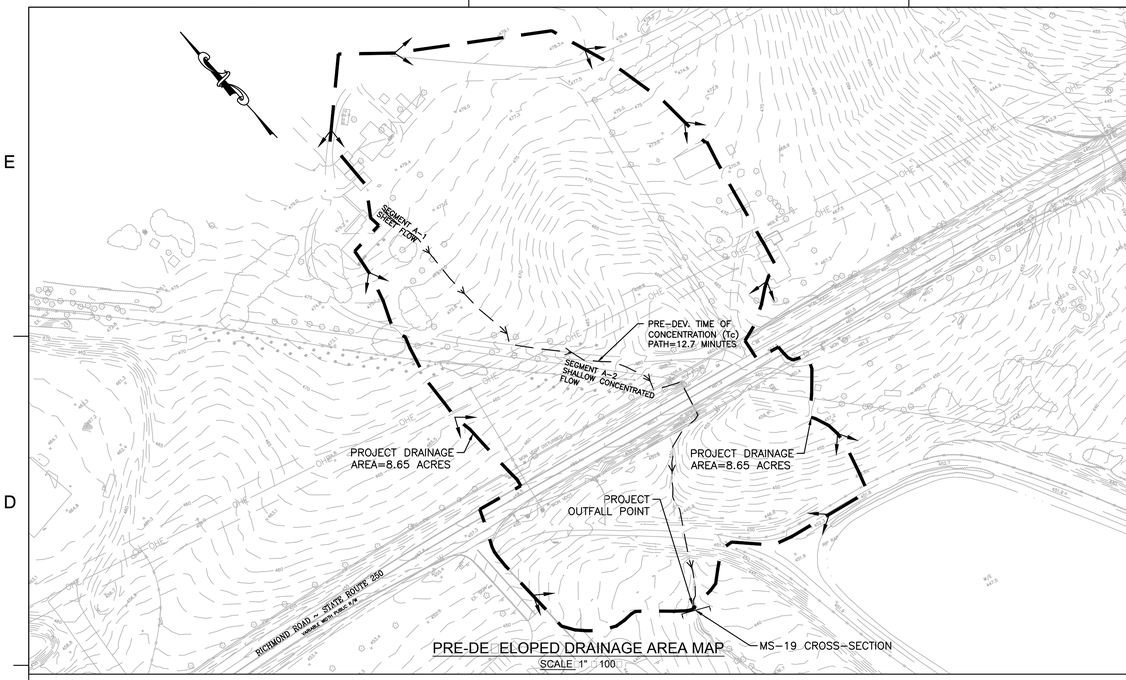

PRE-DEVELOPED DRAINAGE AREA MAP
SCALE 1" = 100'

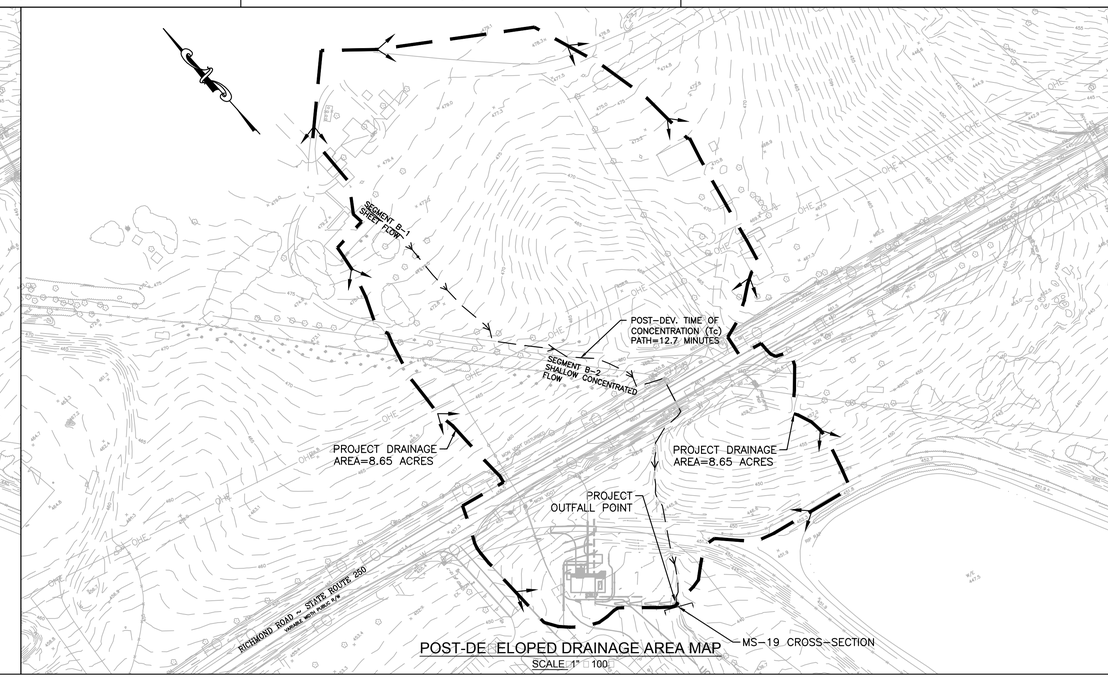

POST-DEVELOPED DRAINAGE AREA MAP
SCALE 1" = 100'

PRE-DEVELOPED RUNOFF CALCS

DA:	Pre-Development Project Site			
	C-factor	Area	C*A	
Grass	0.35	7.84	2.74	
Trees	0.20	0.15	0.03	
Gravel	0.70	0.22	0.15	
Building / road	0.90	0.44	0.40	
		Area	Total C-factor	
		8.65	**0.38**	
Tc:				
	Overland A-1:			
		Length =	100	ft
		Slope =	3.70	%
		c-factor =	0.35	
			tc =	8.3 minutes
	Concentrated A-2:			
		Length =	760	ft
		H =	36.0	ft
				4.4 minutes
			Tc =	**12.7 minutes**
	I_2 = 3.53		Q_2 =	**11.75 cfs**
	I_{10} = 4.72		Q_{10} =	**15.68 cfs**
	I_{25} = 5.43		Q_{25} =	**18.05 cfs**
	I_{50} = 5.70		Q_{50} =	**18.96 cfs**
	I_{100} = 6.20		Q_{100} =	**20.60 cfs**

STORMWATER NARRATIVE

FLUVANNA COUNTY IS NOT IN A CHESAPEAKE BAY PRESERVATION AREA, AND THE PROJECT CONSISTS OF LAND DISTURBANCE BETWEEN 10,000 SF AND 1 ACRE. THEREFORE, A STORMWATER MANAGEMENT PLAN IS NOT REQUIRED. HOWEVER, AN EROSION & SEDIMENT CONTROL PLAN IS REQUIRED AND HAS BEEN PREPARED.

MS-19 HAS BEEN MET BY PROVING THE DOWNSTREAM RECEIVING DITCH IS ADEQUATE FOR THE 2-YEAR STORM VELOCITY (NON-EROSIVE, SEE TABLE 3.18-A THIS SHEET) AND 10-YEAR STORM CAPACITY (DEPTH, SEE CROSS SECTION THIS SHEET).

POST-DEVELOPED RUNOFF CALCS

DA:	Post-Development Project site			
	C-factor	Area	C*A	
Grass	0.35	7.73	2.71	
Trees	0.20	0.15	0.03	
Gravel	0.70	0.27	0.19	
Building / road	0.90	0.50	0.45	
		Area	Total C-factor	
		8.65	**0.39**	
Tc:				
	Overland B-1:			
		Length =	100	ft
		Slope =	3.70	%
		c-factor =	0.35	
			tc =	8.3 minutes
	Concentrated B-2:			
		Length =	760	ft
		H =	36	ft
				4.4 minutes
			Tc =	**12.7 minutes**
	I_2 = 3.53		Q_2 =	**11.93 cfs**
	I_{10} = 4.72		Q_{10} =	**15.92 cfs**
	I_{25} = 5.43		Q_{25} =	**18.32 cfs**
	I_{50} = 5.70		Q_{50} =	**19.25 cfs**
	I_{100} = 6.20		Q_{100} =	**20.91 cfs**

TABLE 3.18-A

PERMISSIBLE VELOCITIES FOR GRASS-LINED CHANNELS

Channel Slope	Lining	Velocity* (ft./sec.)
0 - 0.5% OUTFALL CHANNEL SLOPE=4%	Bermudagrass	6
	Reed canarygrass Tall fescue Kentucky bluegrass	5
	Grass-legume mixture	4
	Red fescue Redtop Sericea lespedeza Annual lespedeza Small grains Temporary vegetation	2.5
5 - 10%	Bermudagrass	5
	Reed canarygrass Tall fescue Kentucky bluegrass	4
	Grass-legume mixture	3
Greater than 10%	Bermudagrass	4
	Reed canarygrass Tall fescue Kentucky bluegrass	3

* For highly erodible soils, decrease permissible velocities by 25%.

3.75 FPS < 4 FPS; THEREFORE ADEQUATE

Source: Soil and Water Conservation Engineering, Schwab, et. al, and American Society of Civil Engineers

MS-19 CROSS-SECTION CALCULATIONS:

INPUTS:
Q2 = 11.93 CFS
Q10 = 15.92 CFS
FLOW ELEMENT = TRIANGULAR CHANNEL
SLOPE = 4%
MANNING'S "n" COEFFICIENT = 0.04
(GRASS CHANNEL WITH INTERMITTENT RIP-RAP)

OUTPUTS:
2-YEAR VELOCITY = 3.75 FPS
10-YEAR DEPTH = 0.73'

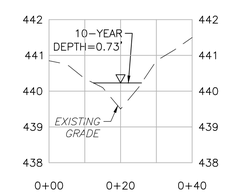

SCALES:
H: 1"=20', V: 1"=2'

Dewberry

Dewberry Engineers Inc.
4805 Lake Brook Drive, Suite 200
Glen Allen, Virginia 23060
PHONE: 804.290.7957
FAX: 804.290.7928
www.dewberry.com

ZION CROSSROADS
WATER BOOSTER PUMP STATION
AND WASTEWATER PUMP STATION
FLUVANNA COUNTY
DEPARTMENT OF PUBLIC WORKS
FLUVANNA COUNTY, VA

KEY PLAN

SEAL
COMMONWEALTH OF VIRGINIA
DANYLO A. VILLHAUER
Lic. No. 046419
5/4/2018
PROFESSIONAL ENGINEER

SCALE
0' 100' 200'
GRAPHIC SCALE

No.	DATE	BY	Description

REVISIONS

DRAWN BY	BMM & JEH
APPROVED BY	DAV
CHECKED BY	BJH
DATE	MAY 2018

TITLE
WBS
PRE- AND POST-DEVELOPMENT
DRAINAGE AREA MAPS

PROJECT NO. 50078863

C2.6

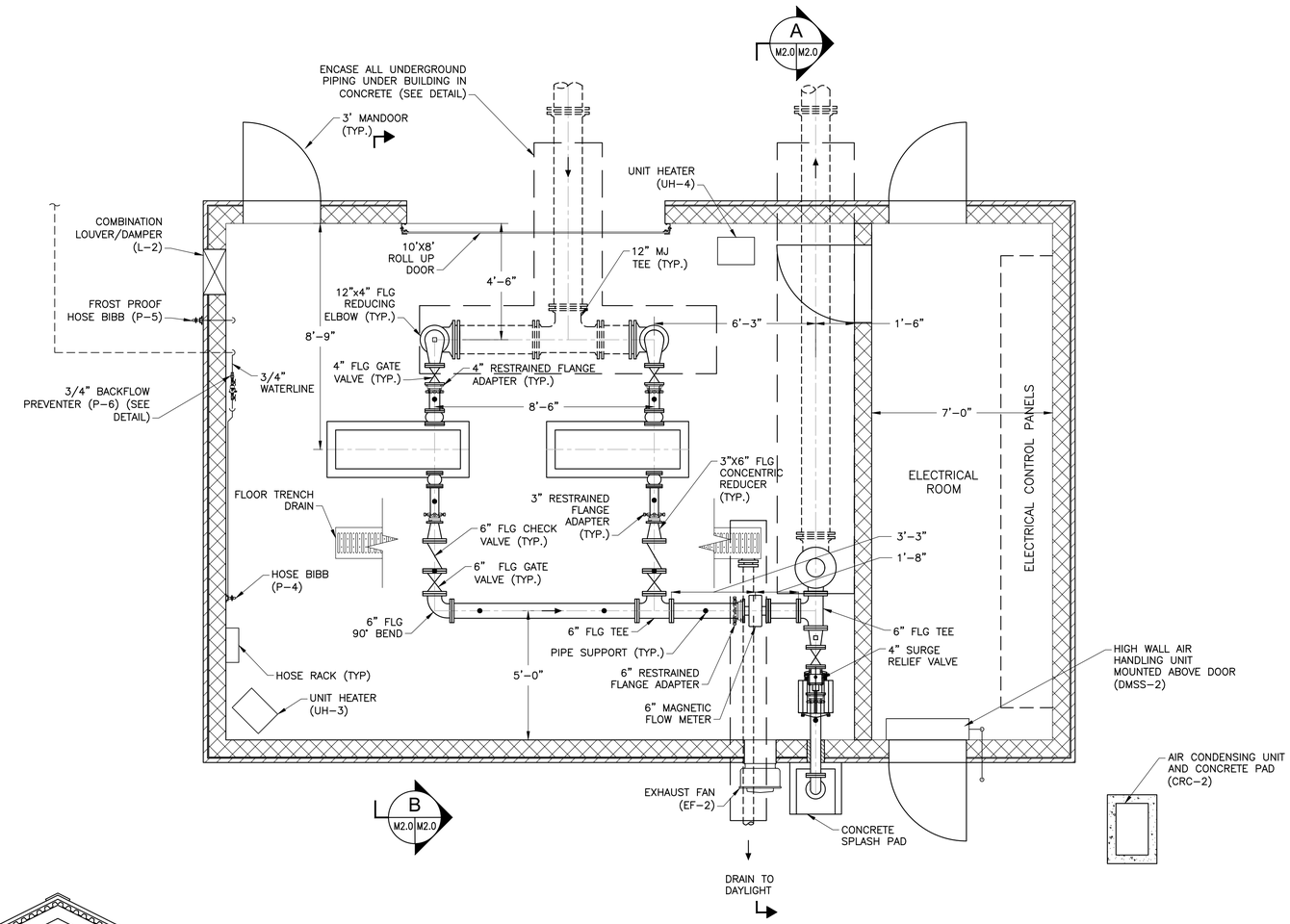

BOOSTER STATION PLAN

SCALE: 3/8" = 1'-0"

NOTE:
1. ALL PIPE SUPPORTS NOT SHOWN IN SECTION VIEW FOR CLARITY
2. ALL UNDERGROUND PIPING BENEATH PUMP STATION SHALL BE ENCASED IN CONCRETE BEYOND TWO FEET OF THE EXTERIOR OF THE BUILDING (SEE CONCRETE ENCASEMENT DETAIL)
3. ALL PIPING SHALL HAVE A MIN OF 3'-6" COVER

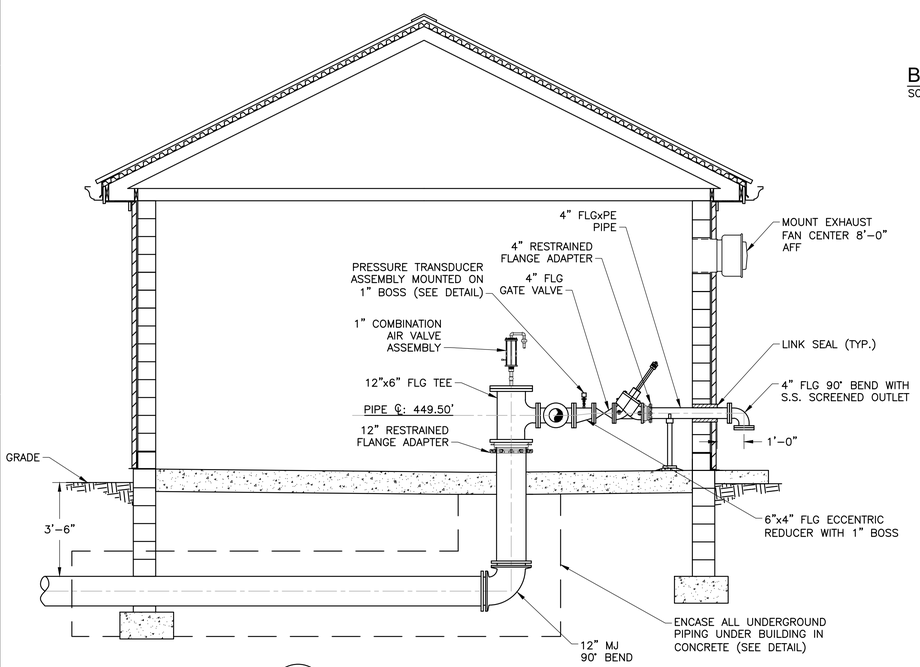

A BOOSTER STATION SECTION

M2.0 M2.0 SCALE: 3/8"=1'-0"

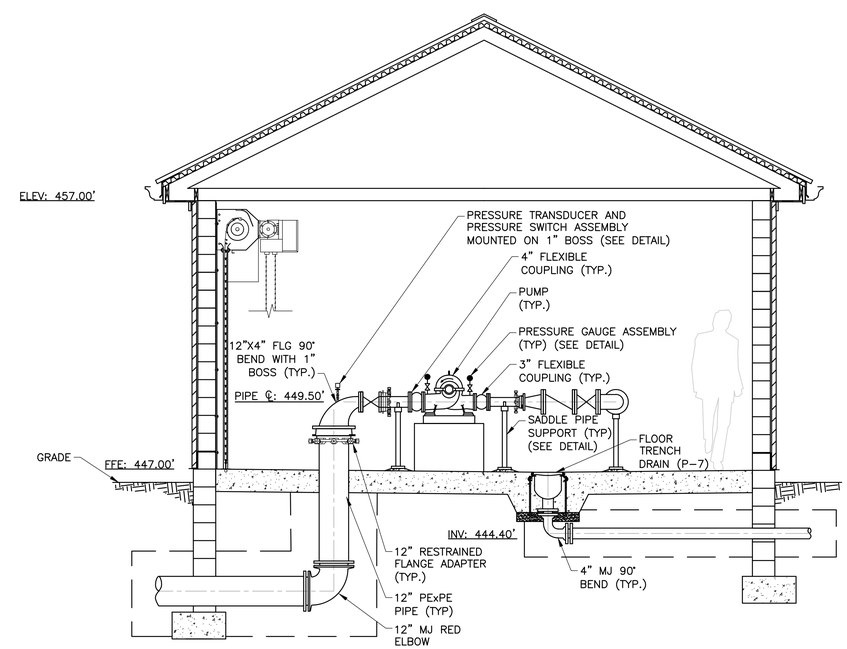

B TYPICAL PUMP ASSEMBLY

M2.0 M2.0 SCALE: 3/8"=1'-0"

Dewberry

Dewberry Engineers Inc.
4805 Lake Brook Drive, Suite 200
Glen Allen, Virginia 23060
PHONE: 804.290.7957
FAX: 804.290.7928
www.dewberry.com

ZION CROSSROADS WATER BOOSTER PUMP STATION AND WASTEWATER PUMP STATION

FLUVANNA COUNTY
DEPARTMENT OF PUBLIC WORKS

FLUVANNA COUNTY, VA

KEY PLAN

SEAL

COMMONWEALTH OF VIRGINIA
DANYLO A. VILLHAUER
Lic. No. 046419
5/4/2018
PROFESSIONAL ENGINEER

SCALE

No.	DATE	BY	Description

REVISIONS

DRAWN BY	BMM & JEH
APPROVED BY	DAV
CHECKED BY	BJH
DATE	MAY 2018

TITLE

WBS LAYOUT

PROJECT NO. 50078863

M2.0

DIMENSION TABLE (IN)			
PIPE SIZE	A	B	BASE PLATE
3	2	1	3/8X6X6
4	2	1	3/8X6X6
6	2	1	3/8X6X6
8	3	1	1/2X8X8
10	3	1	1/2X8X8
12	3	1-1/4	1/2X8X8
14	4	1-1/2	1/2X8X8
16	4	1-1/2	1/2X8X8
18	6	2	1/2X10X10
20	6	2	1/2X10X10
24	6	2	1/2X10X10
30	8	3	1/2X14X14
36	8	3	1/2X14X14

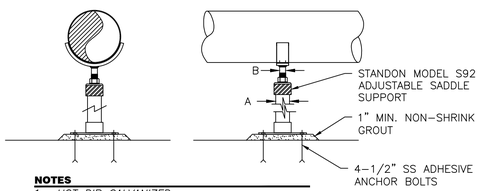

NOTES
1. *HOT DIP GALVANIZED.*
2. *PIPE SUPPORTS SHALL BE GROUTED BEFORE INSTALLING PIPE.*

SADDLE PIPE SUPPORT
N.T.S. Source: Dewberry

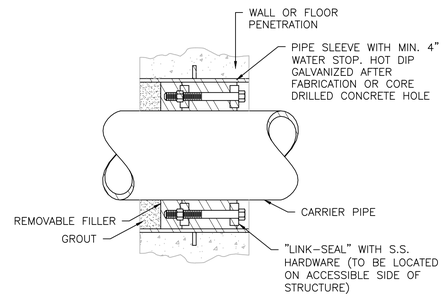

NOTES
1. HOLE SIZE AND LINK SEAL SIZE TO BE COORDINATED AS PER MANUFACTURER'S REQUIREMENTS.

LINK SEAL
N.T.S. Source: Dewberry

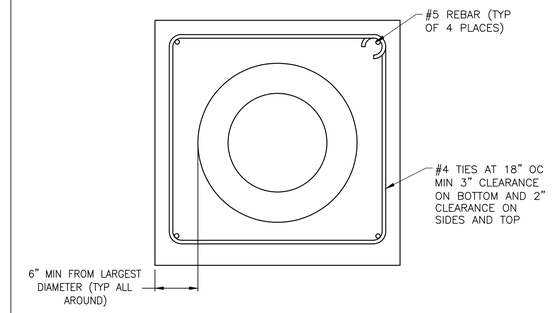

NOTES
1. CONCRETE ENCASEMENT SHALL BE PLACED AS INDICATED ON PLANS
2. CONCRETE SHALL BE 4,500 P.S.I (MIN) AT 28 DAYS IN ACCORDANCE WITH ACI-318=08
3. PIPE SHALL BE BRACED HORIZONTALLY AND VERTICALLY PRIOR TO CONCRETE POUR

PIPE ENCASEMENT DETAIL
N.T.S. Source: Dewberry

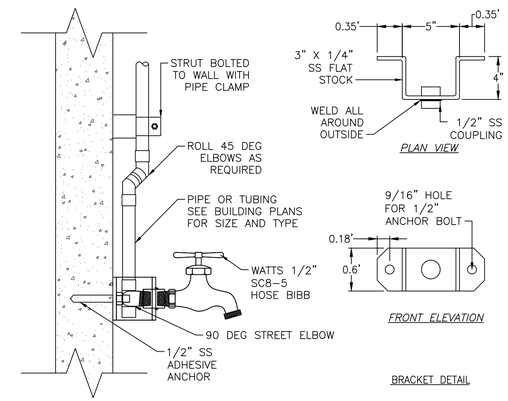

HOSE BIBB SURFACE MOUNT
N.T.S. Source: Dewberry

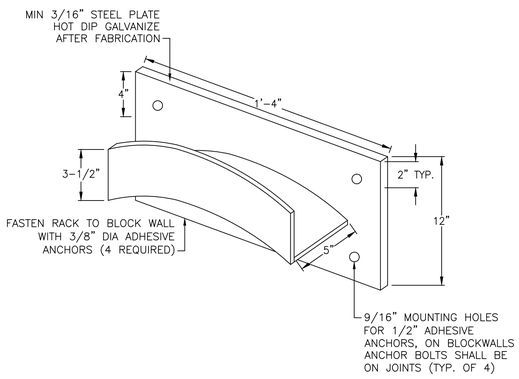

NOTES
1. CONTRACTOR SHALL SUPPLY A HOSE RACK AND 50' OF HEAVY DUTY 3/4" GARDEN HOSE AT EACH HOSE BIB.

HOSE RACK
N.T.S. Source: Dewberry

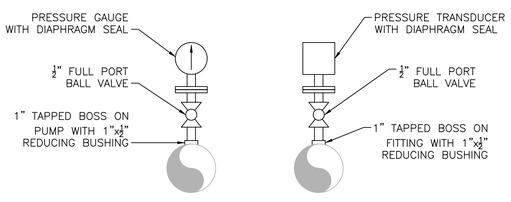

NOTES
1. ALL PIPE NIPPLES AND FITTINGS TO BE STAINLESS STEEL.
2. ALL TAPS TO BE ON A FITTING BOSS OR TAPPED FLANGE.

PRESSURE GAUGE AND TRANSDUCER ASSEMBLIES
N.T.S. Source: Dewberry

UNIT HEATER SCHEDULE

UNIT DESIGNATION	AREA SER□ED	CAPACITY □KW□	HEATER ELECTRIC	FAN ELECTRIC	AIR□THROW	TYPE	MANUFACTURER	MODEL NO	OPTIONS	REMARKS
UH-3 □ UH-4	WATER BOOSTER STATION PUMP ROOM	7.5 KW □EACH□	480□ □3 PHASE □9.9 AMPS	480□ □3 PHASE □1□15 HP	850 CFM 27□HORI□ONTAL	WALL MOUNTED	CHROMALOX	H□H-07-43-30	WALL MOUNTED T□STAT □□	INSTALL WITH MANUFACTURER□S WALL BRACKET□INSTALL WALL MOUNTED T□STAT BELOW UNIT HEATERS

COMBINATION LOUVER/DAMPER SCHEDULE

UNIT DESIGNATION	AREA SER□ED	FREE AREA SQ. FT.	SI□E □WXH□ INCHES	TYPE	MANUFACTURER	MODEL NO	MATERIAL	OPTIONS	REMARKS
L-2	WATER BOOSTER STATION PUMP ROOM	1.65	23□36	COMBINATION FIXED LOU□ER WITH DAMPER	GREENHECK	EACC-601	ALUMINUM WITH MILL FINISH	BIRD SCREEN AND MOTORI□ED DAMPER □□	INTERLOCK WITH EF-2. FLANGE MOUNTING TO OUTSIDE OF WALL. DAMPER□MOTOR TO BE LOCATED IN LOU□ER COMPARTMENT

EXHAUST FAN SCHEDULE

UNIT DESIGNATION	AREA SER□ED	CAPACITY □CFM□	STATIC PRESSURE □IN. W.C□	WALL OPENING SI□E □IN□	TYPE	MANUFACTURER	MODEL NO	MOTOR DATA HP	MOTOR DATA RPM	REMARKS
EF-2	WATER BOOSTER STATION PUMP ROOM	1108 / 967	0.1 / 0.3	10.5□10.5	DIRECT DRI□E	GREENHECK	CW-095 □ARI-GREEN	1□6	□ARIABLE	INCLUDES GRA□ITY DAMPER CONTROL WITH WALL MOUNTED T□STAT AND HOA SWITCH □□AND □ARI-GREEN SPEED CONTROL

□SEE ELECTRICAL DRAWINGS FOR CONTROL

SPLIT SYSTEM HEAT PUMP SCHEDULE

UNIT DESIGNATION	MANUFACTURER □MODEL		COOLING		HEATING			INDOOR UNIT				OUTDOOR UNIT				NOTES
	INDOOR UNIT	OUTDOOR UNIT	TOTAL CAP. MBH	SEER	TOTAL MBH	COP	ELEC. HEAT □KW□	TOTAL AMPS	MCA	BRKR	□OLT□ PH	TOTAL AMPS	MCA	BRKR	□OLT□ PH	
DMSS-2	EMI □WLHG	EMI □S1HG	18	13.0	16.4	3.5	3	13.6	17	20	208□1	6.7	8.2	15	208□1	1□2□3□4□5□6□7□8

NOTES□
1. PRO□IDE WITH MANUFACTURER SUPPLIED 24 □OLT WALL MOUNTED THERMOSTAT.
2. PRO□IDE ELECTRIC HEAT WITH AUTO RESET HIGH TEMPERATURE CUTOUT AND REDUNDANT HIGH TEMPERATURE FUSE LINK.
3. PRO□IDE WITH DISCONNECT FOR BOTH INDOOR AND OUTDOOR UNIT.
4. PRO□IDE WITH COPPER FIN□COPPER TUBE CONDENSER COIL.
5. PRO□IDE WITH CONDENSER COIL CORROSION PROTECTION COATING.
6. ALL PIPING AND CONDUIT SHALL BE RIGIDLY SUPPORTED.
7. ROUTE CONDENSATE DISCHARGE PIPING WITH SCREENED SS OUTLET AWAY FROM BUILDING TO A□OID PONDING.
8. INSTALL CONDENSER UNIT ON CONCRETE EQUIPMENT PAD

PLUMBING FIXTURE SCHEDULE

MARK	FIXTURE	MANUFACTURER	DESCRIPTION (MODEL)	ROUGH-IN SIZES WASTE	VENT	C.W.	H.W.	T.W.	DESCRIPTION (MODEL)
P-4	HOSE BIB	WATTS	1/2" SC8-5	–	–	1/2"	–	–	WITH VACUUM BREAKER
P-5	FROST-PROOF HOSE BIB	WATTS	1/2" FHB	–	–	1/2"	–	–	WITH VACUUM BREAKER
P-6	BACKFLOW PREVENTER	WATTS	1" SERIES 009 REDUCED PRESSURE ZONE ASSEMBLY	–	–	3/4"	–	–	
P-7	FLOOR TRENCH DRAIN	ABT	TRENCHFORMER	12"	–	–	–	–	PROVIDE WITH TR12-12.502D.FB HIGH INTAKE SLOTTED DUCTILE IRON GRATING.

Dewberry

Dewberry Engineers Inc.
4805 Lake Brook Drive, Suite 200
Glen Allen, Virginia 23060
PHONE: 804.290.7957
FAX: 804.290.7928
www.dewberry.com

ZION CROSSROADS
WATER BOOSTER PUMP STATION
AND WASTEWATER PUMP STATION
FLUVANNA COUNTY
DEPARTMENT OF PUBLIC WORKS
FLUVANNA COUNTY, VA

KEY PLAN

SEAL
COMMONWEALTH OF VIRGINIA
DANYLO A. VILLIHAUER
Lic. No. 046419
5/4/2018
PROFESSIONAL ENGINEER

SCALE

No.	DATE	BY	Description

REVISIONS

DRAWN BY BMM & JEH
APPROVED BY DAV
CHECKED BY BJH
DATE MAY 2018

TITLE
WBS SCHEDULES

PROJECT NO. 50078863

M2.1

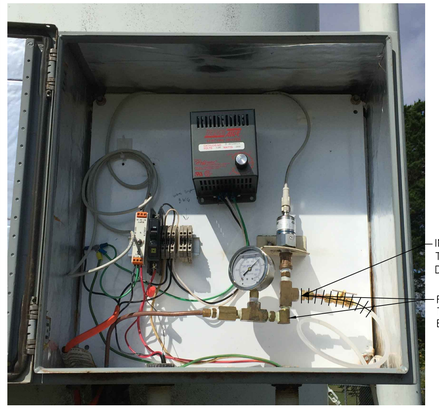

EXISTING DOC ELEVATED TANK PRESSURE TRANSDUCER

N.T.S. Source: Dewberry

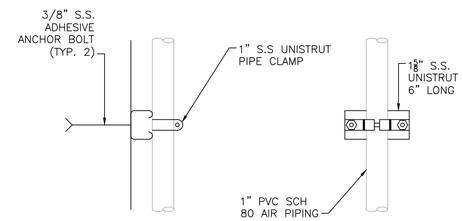

PIPE SUPPORT

N.T.S. Source: Dewberry

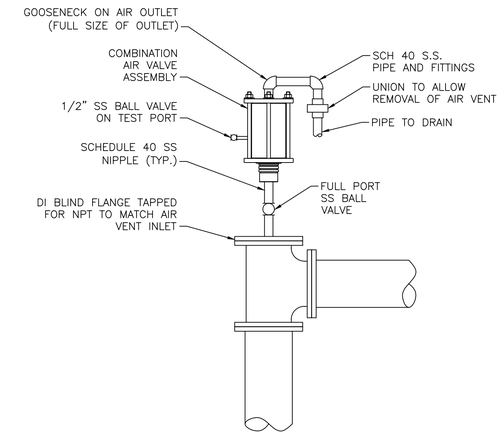

COMBINATION AIR VENT

N.T.S. Source: Dewberry

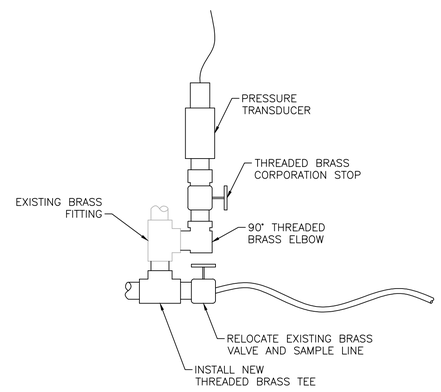

NOTES

1. SUPPORT RIGIDLY WITH S.S. SUPPORTS

DOC ELEVATED TANK PRESSURE TRANSDUCER INSTALLATION

N.T.S. Source: Dewberry

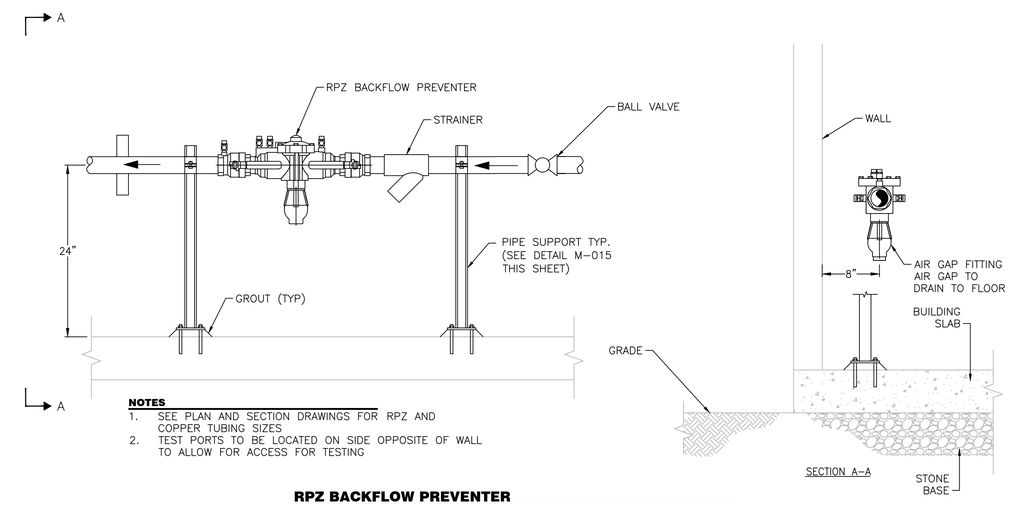

NOTES

1. SEE PLAN AND SECTION DRAWINGS FOR RPZ AND COPPER TUBING SIZES
2. TEST PORTS TO BE LOCATED ON SIDE OPPOSITE OF WALL TO ALLOW FOR ACCESS FOR TESTING

RPZ BACKFLOW PREVENTER

N.T.S. Source: Dewberry

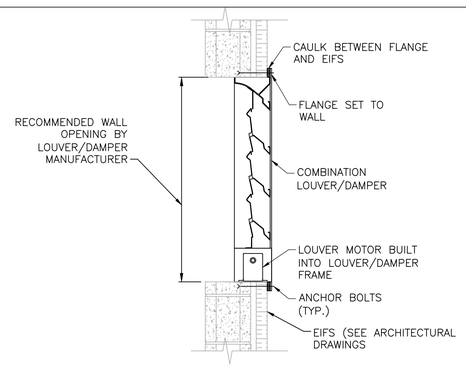

NOTES

1. FOR INSTALLATION ON SPLIT FACE BLOCK, GRIND AREA ON BLOCK SMOOTH WHERE WALL COLLAR SEATS, SHIM AND CAULK AS REQUIRED.
2. ALL CAVITIES AROUND WALL OPENING SHALL BE FILLED SOLID WITH MORTAR.

FLANGE MOUNTED COMBINATION LOUVER/DAMPER

N.T.S. Source: Dewberry

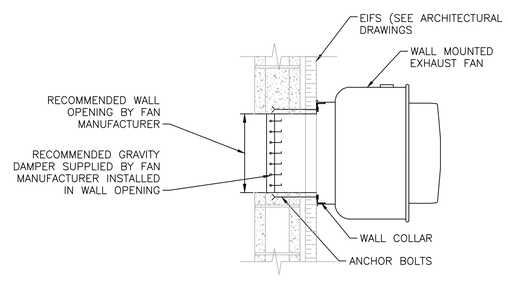

NOTES

1. FOR INSTALLATION ON SPLIT FACE BLOCK, GRIND AREA ON BLOCK SMOOTH WHERE WALL COLLAR SEATS, SHIM AND CAULK AS REQUIRED.
2. ALL CAVITIES AROUND WALL OPENING SHALL BE FILLED SOLID WITH MORTAR.
3. WHERE EXHAUST FAN IS INSTALLED ON CAVITY WALL CONSTRUCTION, CAVITY SHALLY BE FILLED SOLID WITH MORTAR ALL AROUND OPENING.

WALL MOUNTED EXHAUST FAN

N.T.S. Source: Dewberry

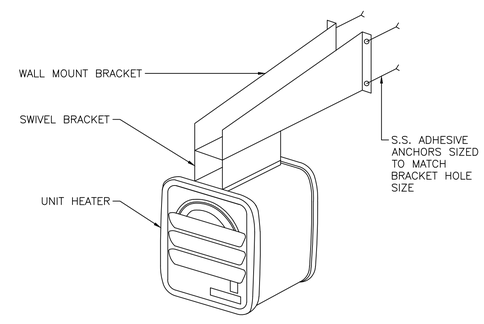

NOTES

1. MINIMUM MOUNTING HEIGHT 7', PREFERRED HEIGHT 8'
2. WALL MOUNT BRACKET TO BE SIZED AND SUPPLIED BY MANUFACTURER AS PART OF HEATER

ELECTRIC UNIT HEATER MOUNTING

N.T.S. Source: Dewberry

Dewberry

Dewberry Engineers Inc.
4805 Lake Brook Drive, Suite 200
Glen Allen, Virginia 23060
PHONE: 804.290.7957
FAX: 804.290.7928
www.dewberry.com

ZION CROSSROADS
WATER BOOSTER PUMP STATION
AND WASTEWATER PUMP STATION
FLUVANNA COUNTY
DEPARTMENT OF PUBLIC WORKS
FLUVANNA COUNTY, VA

KEY PLAN

SEAL

COMMONWEALTH OF VIRGINIA
DANYLO A. VILLHAUER
Lic. No. 046419
5/4/2018
PROFESSIONAL ENGINEER

SCALE

No.	DATE	BY	Description

REVISIONS

DRAWN BY	BMM & JEH
APPROVED BY	DAV
CHECKED BY	BJH
DATE	MAY 2018

TITLE

WBS DETAILS

PROJECT NO. 50078863

M2.2

GENERAL STRUCTURAL NOTES

GENERAL:

1. THE GENERAL STRUCTURAL NOTES ARE INTENDED TO AUGMENT THE DRAWINGS AND SPECIFICATIONS. SHOULD CONFLICTS EXIST BETWEEN THE DRAWINGS, SPECIFICATIONS, AND GENERAL STRUCTURAL NOTES, THE STRICTEST PROVISION SHALL GOVERN.
2. UNLESS NOTED OTHERWISE, CONSTRUCTION MEANS AND METHODS SHALL BE SOLELY THE RESPONSIBILITY OF THE CONTRACTOR.
3. THE STRUCTURES DEFINED BY THESE DRAWINGS HAVE BEEN DESIGNED AS COMPLETE STRUCTURES TO RESIST THE LOADS LISTED IN THE DESIGN SECTION OF THESE GENERAL NOTES. THE CONTRACTOR SHALL BE RESPONSIBLE FOR CONSTRUCTION LOADS AND OTHER LOADS IMPOSED ON THE PARTIALLY COMPLETED STRUCTURE(S). THE CONTRACTOR SHALL BE RESPONSIBLE FOR THE DESIGN OF SHORING, BRACING, FORMWORK, ERECTION AIDS, AND OTHER NON-PERMANENT SUPPORTING ELEMENTS UTILIZED FOR CONSTRUCTION. THE CONTRACTOR SHALL PROVIDE TEMPORARY BRACING IN ALL DIRECTIONS UNTIL ALL PERMANENT CONNECTIONS ARE MADE.
4. CONTRACTOR SHALL NOT SCALE DIMENSIONS FROM THE DRAWINGS.

DESIGN:

1. STRUCTURAL DESIGN CONFORMS TO THE REQUIREMENTS OF THE VIRGINIA UNIFORM STATEWIDE BUILDING CODE, 2012 EDITION (IBC 2012 WITH VIRGINIA AMENDMENTS).
2. BUILDING DESIGN LOADS AND DESIGN DATA FOR NEW CONSTRUCTION ARE AS FOLLOWS:

   A. FLOOR LIVE LOADS:

SLAB-ON-GRADE	200 PSF
GENERATOR PAD	250 PSF
GENERATOR ACCESS PLATFORM	60 PSF

   B. MINIMUM ROOF LIVE LOAD: 20 PSF

   C. ROOF SNOW LOAD:

GROUND SNOW LOAD (Pg)	30 PSF
SNOW EXPOSURE FACTOR (Ce)	1.0
SNOW LOAD IMPORTANCE FACTOR (I)	1.1
THERMAL FACTOR (Ct)	1.0
FLAT ROOF SNOW LOAD (Pf)	23.1 PSF

   D. WIND LOAD:

BASIC WIND SPEED (3 SECOND GUST)	120 MPH
BUILDING RISK CATEGORY	3
WIND EXPOSURE CATEGORY	B
INTERNAL PRESSURE COEFFICIENT	±0.18

   E. SEISMIC DESIGN DATA:

BUILDING RISK CATEGORY	3
SEISMIC IMPORTANCE FACTOR	1.25
MAPPED SPECTRAL RESPONSE ACCELERATIONS, S_S	0.224
MAPPED SPECTRAL RESPONSE ACCELERATIONS, S_1	0.069
SPECTRAL RESPONSE COEFF. S_{DS}	0.238
SPECTRAL RESPONSE COEFF. S_{D1}	0.110
SITE CLASS (PER GEOTECH REPORT)	D
SEISMIC DESIGN CATEGORY	B
SEISMIC-FORCE-RESISTING SYSTEM	DETAILED PLAIN MASONRY SHEAR WALLS
ANALYSIS PROCEDURE	EQUIVALENT LATERAL FORCE

FOUNDATIONS:

1. FOUNDATION DESIGN IS BASED ON A GEOTECHNICAL ENGINEERING REPORT PREPARED BY SCHNABEL ENGINEERING DATED MARCH 3, 2017 (SCHNABEL PROJECT NUMBER 16C13175 TASK 2).
2. THE STRUCTURAL ENGINEER OF RECORD IS NOT RESPONSIBLE FOR SUBSURFACE CONDITIONS ENCOUNTERED IN THE FIELD CONTRARY TO THOSE ASSUMED FOR DESIGN.
3. FOUNDATION BEARING PRESSURE USED IN DESIGN (POUNDS PER SQUARE FOOT):

   WALL FOOTINGS 3,000 PSF

4. ALL COMPACTED FILL, EXCAVATIONS, AND SUBGRADES SHALL BE OBSERVED AND TESTED BY A GEOTECHNICAL ENGINEER REGISTERED IN THE COMMONWEALTH OF VIRGINIA (OR A QUALIFIED GEOTECHNICAL TECHNICIAN WORKING UNDER THE DIRECT SUPERVISION OF A REGISTERED ENGINEER) TO VERIFY SPECIFIED GEOTECHNICAL CONFORMANCE REQUIREMENTS. CONTRACTOR SHALL COORDINATE TESTING WITH OWNER AS DECLARED IN THE CONTRACT DOCUMENTS.
5. AFTER STRIPPING TOPSOIL, THE SUBGRADES SHALL BE PROOFROOLLED WITH A LOADED TANDEM AXLE DUMP TRUCK AND EVALUATED BY THE PROJECT GEOTECHNICAL ENGINEER TO DETERMINE THEIR SUITABILITY FOR SUPPORTING LOADS. PROOFROLLING SHALL BE LIMITED TO PERIODS OF GOOD WEATHER AND NOT WHILE THE PROJECT SITE IS WET, FROZEN, OR SEVERELY DESICCATED. SUBGRADES WHICH EXHIBIT EXCESSIVE PUMPING, WEAVING, OR RUTTING SHALL BE SCARIFIED, DRIED, AND RECOMPACATED, OR UNDERCUT AND REPLACED WITH COMPACTED STRUCTURAL FILL AS DIRECTED BY THE PROJECT GEOTECHNICAL ENGINEER.
6. COMPACTED ENGINEERED FILL SHALL BE AS FOLLOWS:

   A. ON-SITE SOILS APPROVED BY THE PROJECT GEOTECHNICAL ENGINEER.
   B. OFF-SITE SOILS HAVING A CLASSIFICATION OF CL, ML, SC, SM, SP, SW, GC, GM, GP, OR GW PER ASTM D-2487 AND APPROVED BY THE PROJECT GEOTECHNICAL ENGINEER.
   C. PLACED IN LOOSE LIFTS NOT EXCEEDING 8 INCHES IN THICKNESS.
   D. COMPACTED TO AT LEAST 95 PERCENT OF MAXIMUM DRY DENSITY PER ASTM D-698.
   E. MOISTURE CONTENT ±3 PERCENT OF OPTIMUM.
   F. FREE OF BOULDERS, ORGANICS, TRASH, PARTICLES OF 3 INCHES OR MORE IN DIAMETER, AND OTHER DELETERIOUS MATERIALS.

7. DURING FILLING AND BACKFILLING, DENSITY TESTING SHALL BE MADE IN ACCORDANCE WITH ASTM D-1556 (OR EQUIVALENT) TO MONITOR COMPACTION LEVELS AND MOISTURE CONTENTS. FREQUENCY OF DENSITY TESTING SHALL BE AS DIRECTED BY GEOTECHNICAL ENGINEER TO VERIFY SPECIFIED COMPACTION AND MOISTURE CONTENT REQUIREMENTS.
8. CARE SHALL BE EXERCISED DURING EXCAVATION FOR FOUNDATIONS SO THAT AS LITTLE DISTURBANCE AS POSSIBLE OCCURS AT THE FOUNDATION LEVEL. LOOSE OR SOFT SOILS SHALL BE CAREFULLY CLEANED FROM THE BOTTOM OF THE EXCAVATIONS BEFORE PLACING CONCRETE. ACTUAL FOUNDATION SUBGRADES SHALL BE OBSERVED DURING CONSTRUCTION BY THE GEOTECHNICAL ENGINEER TO EVALUATE WHETHER SUITABILITY OF SUBGRADE SOILS.
9. UNLESS NOTED OTHERWISE, FOUNDATION SUBGRADES REQUIRING UNDERCUT SHALL BE FILLED FROM THE ELEVATION OF UNDERCUT TO THE ORIGINAL DESIGN SUBGRADE ELEVATION WITH LEAN CONCRETE, MINIMUM 500 PSI FLOWABLE FILL.
10. WHENEVER POSSIBLE, FOUNDATION CONCRETE SHALL BE PLACED IMMEDIATELY AFTER EXCAVATION SO THAT ACCUMULATION OF WATER IN THE EXCAVATION OR DRYING OF FOUNDATION SOILS CAN BE AVOIDED.
11. CONTRACTOR SHALL CONTROL SITE GROUNDWATER AND/OR SURFACE WATER BY ALL MEANS NECESSARY TO MAINTAIN A WATER LEVEL ONE FOOT BELOW SLAB SUBGRADE SO AS TO NOT DAMAGE FOUNDATION EXCAVATIONS.
12. ANY SUBGRADE SOILS WHICH HAVE BEEN WEAKENED DUE TO SATURATION OR DISTURBANCE SHALL BE RECOMPACTED OR REMOVED AND REPLACED WITH STRUCTURAL FILL AS DIRECTED BY THE GEOTECHNICAL ENGINEER. CONCRETE STRUCTURES SHALL BE CONSTRUCTED IN AN EXPEDIENT MANNER ONCE EXCAVATIONS ARE MADE TO AVOID WEATHER DAMAGE.

MASONRY:

1. ALL MASONRY CONSTRUCTION SHALL CONFORM TO THE REQUIREMENTS OF "BUILDING CODE REQUIREMENTS FOR MASONRY STRUCTURES" (ACI 530-08/ASCE 5-08/TMS 402-08) AND "SPECIFICATION FOR MASONRY STRUCTURES" (ACI 530.1-08/ASCE 6-08/TMS 602-08).
2. CONCRETE MASONRY UNITS SHALL CONFORM TO THE REQUIREMENTS OF ASTM C 90.
3. MINIMUM COMPRESSIVE STRENGTH OF MASONRY ASSEMBLAGE, F'm, AT 28 DAYS SHALL BE 2,000 PSI.
4. MORTAR SHALL CONFORM TO THE REQUIREMENTS OF ASTM C 270 FOR JOB-MIXED MORTAR AND ASTM C 1142 FOR READY MIXED MORTAR AND SHALL BE TYPE S.
5. GROUT FOR HOLLOW MASONRY UNITS SHALL CONFORM TO THE REQUIREMENTS OF ASTM C 476 AND SHALL HAVE A 28 DAY COMPRESSIVE STRENGTH OF 3,000 PSI. JOB SITE MIXING OF GROUT IS NOT ALLOWED.
6. CONTRACTOR SHALL PROVIDE ADEQUATE TEMPORARY BRACING AND SHORING OF MASONRY WALLS AGAINST WIND LOADS, CONSTRUCTION LOADS, AND OTHER TEMPORARY FORCES UNTIL SUCH PROTECTION IS NO LONGER REQUIRED FOR THE SAFE SUPPORT OF MASONRY WALLS.

REINFORCED CONCRETE:

1. UNLESS NOTED OTHERWISE, ALL CONCRETE WORK, DETAILING, FABRICATION, AND PLACING OF REINFORCING AND CONCRETE SHALL BE GOVERNED BY THE LATEST REVISIONS OF:

   A. ACI 301, ACI 315, AND ACI 318.
   B. CRSI RECOMMENDED PRACTICE OF PLACING REINFORCING BARS.
   C. ACI 306 AND ACI 305 FOR COLD AND HOT WEATHER CONCRETING, RESPECTIVELY.

2. ALL CONCRETE SHALL BE NORMAL WEIGHT WITH A MAXIMUM UNIT WEIGHT OF 150 POUNDS PER CUBIC FOOT AND SHALL HAVE A MINIMUM 28 DAY COMPRESSIVE STRENGTH, AS SPECIFIED BELOW, FOR THE RESPECTIVE AREAS:

FOOTINGS	4,000 PSI
INTERIOR SLAB-ON-GRADE	4,000 PSI
EXTERIOR PADS AND PAVEMENT	4,500 PSI

3. PROVIDE A 3/4" CHAMFER AT ALL EXPOSED CONCRETE CORNERS.
4. REINFORCING STEEL SHALL CONFORM TO ASTM A 615, AND SHALL BE GRADE 60 U.N.O.
5. WELDED WIRE FABRIC SHALL BE NEW BILLET STEEL, COLD DRAWN CONFORMING TO ASTM SPECIFICATIONS A 185 AND A 82 AND SHALL BE PROVIDED IN FLAT SHEETS.
6. REINFORCING BAR LAP SPLICES AND HOOK DIMENSIONS SHALL BE AS REQUIRED PER THE SCHEDULE ON SHEET S0.2 UNLESS NOTED OTHERWISE.
7. WHERE SLEEVES ARE SHOWN, CONTRACTOR SHALL SLIGHTLY ADJUST STEEL LOCATION AROUND SLEEVE AS MUCH AS PRACTICABLE. STEEL SHALL NOT BE CUT UNLESS SHOWN OTHERWISE ON THE DRAWINGS, OR UNLESS AGREED TO BY THE ENGINEER ON A CASE BY CASE BASIS.

STRUCTURAL STEEL:

1. UNLESS NOTED OTHERWISE, DESIGN, DETAILING, FABRICATION, AND ERECTION OF STRUCTURAL STEEL SHALL BE IN ACCORDANCE WITH CURRENT ADDITIONS OF AISC 303 AND 360.
2. ALL STRUCTURAL STEEL SHALL CONFORM TO ASTM A-36, U.N.O.
3. TUBE STEEL SHALL CONFORM TO ASTM A500, GRADE B (Fy=46 KSI).
4. STEEL PIPE SHALL CONFORM TO ASTM A53, GRADE B.
5. ALL WELDING SHALL BE DONE BY WELDERS CURRENTLY CERTIFIED BY THE AMERICAN WELDING SOCIETY (AWS) AS HAVING PASSED AWS QUALIFICATION TESTS FOR THE TYPE OF WELDING THEY ARE TO PERFORM. ALL WELDERS SHALL USE E70XX ELECTRODES AND SHALL CONFORM TO AWS STANDARDS.

WOOD FRAMING:

1. THE FOLLOWING SHALL APPLY FOR WOOD FRAMED CONSTRUCTION:

   A. ALL WOOD FRAMING SHALL BE SOUTHERN YELLOW PINE MINIMUM GRADE NUMBER 2, UNLESS NOTED OTHERWISE.
   B. WOOD MEMBERS SHALL HAVE MAXIMUM MOISTURE CONTENT OF 19 PERCENT.
   C. ALL PLYWOOD SHALL BE APA-RATED AS INDICATED ON DRAWINGS.
   D. ALL BOLTS USED FOR WOOD FASTENING SHALL CONFORM TO ASTM A307, LOW-CARBON STEEL WITH EXTERNALLY AND INTERNALLY THREADED FASTENERS, U.N.O.
   E. STEEL CONNECTOR PLATES SHALL CONFORM TO ASTM 36.
   F. LAG SCREWS SHALL CONFORM TO ANSI/ASME STANDARD B18.2.1
   G. NAILING SHALL BE IN ACCORDANCE WITH TABLE 2304.9.1 OF THE IBC 2012 CODE.
   H. WEATHER EXPOSED WOOD AND WOOD IN CONTACT WITH CONCRETE OR MASONRY SHALL BE PRESSURE TREATED.

2. ROOF SHEATHING SHALL BE 5/8" APA-RATED STRUCTURAL I SHEATHING, EXPOSURE 1 (INTERIOR GRADE WITH EXTERIOR GLUE), 48"x96" PANELS. ATTACH SHEATHING TO TRUSSES WITH 10d COMMON NAILS AT 6" ON CENTER AT PANEL EDGES AND 12" ON CENTER AT INTERMEDIATE TRUSS MEMBERS.

METAL-PLATE-CONNECTED WOOD TRUSSES:

1. UNLESS NOTED OTHERWISE, ALL DESIGN, DETAILING, FABRICATION AND ERECTION OF PREFABRICATED METAL-PLATE-CONNECTED WOOD TRUSSES SHALL BE IN ACCORDANCE WITH THE LATEST EDITIONS OF:

   A. AMERICAN FOREST AND PAPER ASSOCIATIONS - NATIONAL DESIGN SPECIFICATION FOR WOOD CONSTRUCTION
   B. TRUSS PLATE INSTITUTE - NATIONAL DESIGN STANDARD FOR METAL PLATE CONNECTED WOOD TRUSSES.
   C. TRUSS PLATE INSTITUTE - COMMENTARY AND RECOMMENDATIONS FOR HANDLING INSTALLING, AND BRACING OF METAL PLATE CONNECTED WOOD TRUSSES.
   D. TRUSS PLATE INSTITUTE - RECOMMENDED DESIGN SPECIFICATIONS FOR TEMPORARY BRACING OF METAL PLATE CONNECTED WOOD TRUSSES.

2. WOOD TRUSSES SHALL BE DESIGNED FOR THE LOADS INDICATED IN THE "DESIGN" SECTION OF THE GENERAL STRUCTURAL NOTES AND AS FOLLOWS:

   A. TOP CHORD DEAD LOAD = 10 PSF.
   B. BOTTOM CHORD DEAD LOAD = 5 PSF

3. TRUSS MANUFACTURER SHALL CALCULATE AND DESIGN TRUSSES FOR WIND UPLIFT PRESSURES BASED ON THE WIND LOAD CRITERIA IN THESE GENERAL NOTES. AT A MINIMUM, THE NET WIND UPLIFT PRESSURE SHALL BE 20 PSF.
4. WOOD TRUSS CHORD AND WEB MEMBERS SHALL BE SOUTHERN YELLOW PINE, MINIMUM GRADE NUMBER 2.
5. MAXIMUM DEFLECTION DUE TO LIVE LOAD SHALL NOT EXCEED L/360. MAXIMUM DEFLECTION DUE TO DEAD LOAD SHALL NOT EXCEED L/240 (INCLUDING LONG TERM EFFECTS).
6. WOOD TRUSS SHOP DRAWINGS AND DESIGN CALCULATIONS SHALL BE SUBMITTED TO THE ENGINEER FOR REVIEW, PRIOR TO FABRICATION OF THE WOOD TRUSSES. WOOD TRUSS SHOP DRAWINGS AND CALCULATIONS SHALL BEAR THE SEAL OF A LICENSED PROFESSIONAL ENGINEER REGISTERED IN THE COMMONWEALTH OF VIRGINA. DO NOT FABRICATE TRUSSES UNTIL SHOP DRAWINGS AND CALCULATIONS HAVE BEEN SUBMITTED AND APPROVED.
7. PROVIDE AND INSTALL PERMANENT AND TEMPORARY BRACING OF WOOD TRUSS MEMBERS AS SHOWN ON THE PLANS, SHOP DRAWINGS, AND AS REQUIRED BY TRUSS PLATE INSTITUTE SPECIFICATIONS. IN ADDITION, 2x4 DIAGONAL X-BRACING SHALL BE INSTALLED IN WOOD TRUSSES AT 12'-0" MAXIMUM INTERVAL AND ATTACHED TO WOOD TRUSSES WITH MINIMUM (4) 10d NAILS.
8. CONTRACTOR SHALL PROVIDE ADEQUATE TEMPORARY BRACING AND SHORING OF WOOD TRUSSES AGAINST WIND LOADS, CONSTRUCTION LOADS, AND OTHER TEMPORARY FORCES UNTIL SUCH PROTECTION IS NO LONGER REQUIRED FOR THE SAFE SUPPORT OF THE ROOF STRUCTURE.

COORDINATION:

1. STRUCTURAL DRAWINGS SHALL BE USED IN CONJUNCTION WITH, AND COORDINATED WITH CIVIL, MECHANICAL, ELECTRICAL, AND OTHER CONTRACT DOCUMENTS.
2. COORDINATE THE EXACT SIZE AND LOCATION OF ALL SLEEVES AND OPENINGS THROUGH CONCRETE SLABS, CONCRETE WALLS, AND MASONRY WALLS WITH CIVIL, MECHANICAL, AND ELECTRICAL DRAWINGS. SLEEVES SHALL BE ASTM A 53 SCHEDULE 40 STEEL WITH A DIAMETER NOT GREATER THAN 12 INCHES AND SHALL BE GALVANIZED AFTER CUTTING.

STRUCTURAL ABBREVIATION LIST

A.F.F.	ABOVE FINISHED FLOOR	KSI	KIPS PER SQUARE INCH
ARCH.	ARCHITECTURAL	LLH	LONG LEG HORIZONTAL
B.S.	BOTH SIDES	LLV	LONG LEG VERTICAL
BOT.	BOTTOM	MAX.	MAXIMUM
CF	CUBIC FOOT	MECH.	MECHANICAL
CMU	CONCRETE MASONRY UNIT	MIN.	MINIMUM
CLR.	CLEAR	M.O.	MASONRY OPENING
COL.	COLUMN	MPH	MILES PER HOUR
CONC.	CONCRETE	N.T.S.	NOT TO SCALE
CONT.	CONTINUOUS	NO.	NUMBER
DET.	DETAIL	#	NUMBER
DIA.	DIAMETER	O.C.	ON CENTER
DIM.	DIMENSION	PSI	POUNDS PER SQUARE INCH
EA.	EACH	PSF	POUNDS PER SQUARE FOOT
ELEV.	ELEVATION	R	RADIUS
E.O.S.	EDGE OF SLAB	REINF.	REINFORCING
EQ..	EQUAL	REQ'D	REQUIRED
EXTG.	EXISTING	RTU	ROOF TOP UNIT
EXP.	EXPANSION	SIM	SIMILAR
EXT.	EXTERIOR	STD.	STANDARD
FIN.	FINISH	STRU.	STRUCTURAL
FTG.	FOOTING	T.O.S.	TOP OF STEEL
GALV.	GALVANIZED	TYP.	TYPICAL
GA.	GAUGE	U.N.O.	UNLESS NOTED OTHERWISE
HSS	HOLLOW STRUCTURAL SECTION	V.I.F.	VERIFY IN FIELD
HORIZ.	HORIZONTAL	VERT.	VERTICAL
INT	INTERIOR	W.W.F.	WELDED WIRE FABRIC

BOS 2019-01-09 p.1443/1491

Dewberry

Dewberry Engineers Inc.
4805 Lake Brook Drive, Suite 200
Glen Allen, Virginia 23060
PHONE: 804.290.7957
FAX: 804.290.7928
www.dewberry.com

ZION CROSSROADS
WATER BOOSTER PUMP STATION
AND WASTEWATER PUMP STATION
FLUVANNA COUNTY
DEPARTMENT OF PUBLIC WORKS
FLUVANNA COUNTY, VA

KEY PLAN

SEAL

COMMONWEALTH OF VIRGINIA
JOSEPH ALLEN WOLHAR
Lic. No. 035964
5-4-2018
PROFESSIONAL ENGINEER

SCALE

No.	DATE	BY	Description

REVISIONS

DRAWN BY	STAFF
APPROVED BY	JAW
CHECKED BY	MKM
DATE	MAY 2018

TITLE

WBS
GENERAL
STRUCTURAL
NOTES

PROJECT NO. 50078863

S2.0

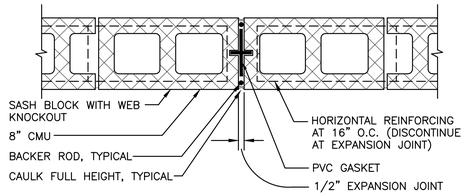

8 / S2.1 MASONRY EXPANSION JOINT DETAIL

SCALE: NOT TO SCALE

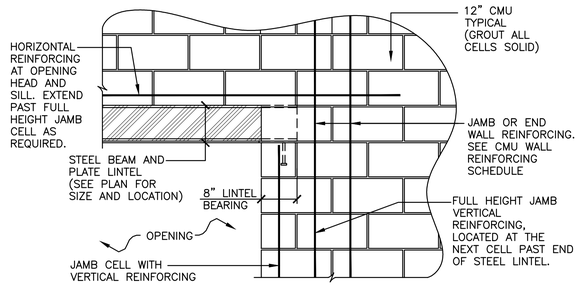

7 / S2.1 TYPICAL JAMB REINFORCING AT STEEL BEAM LINTEL

SCALE: NOT TO SCALE

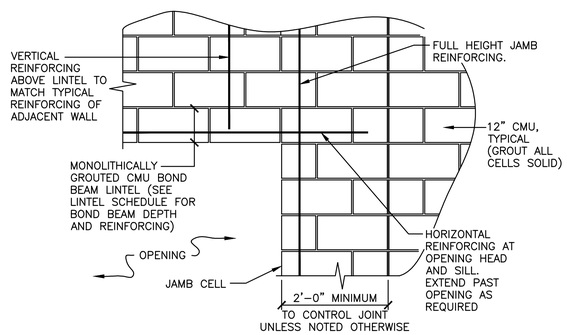

6 / S2.1 TYPICAL JAMB REINFORCING AT CMU BOND BEAM LINTEL

SCALE: NOT TO SCALE

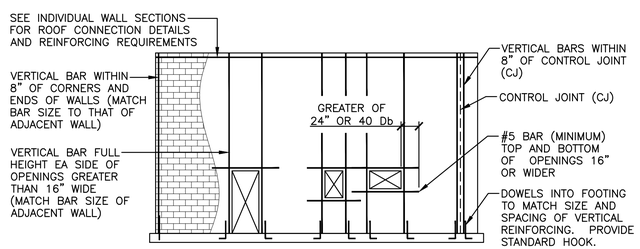

NOTES:

1. REINFORCING SHOWN IS A MINIMUM REQUIREMENT. INDIVIDUAL WALL SECTION REINFORCING REQUIREMENTS (SUCH AS NUMBER OR SIZE OF BARS) SHALL TAKE PRECEDENCE OVER THE REQUIREMENTS SHOWN HEREIN. SEE INDIVIDUAL WALL SECTIONS AND SCHEDULES FOR VERTICAL REINFORCING REQUIREMENTS.
2. ALL DISCONTINUOUS REINFORCEMENT SHALL BE LAPPED PER MINIMUM SPLICE AND EMBEDMENT LENGTH SCHEDULE.
3. VERTICAL STEEL MUST BE SECURED IN PLACE BEFORE THE BLOCKS ARE LAID. ALL VERTICAL REINFORCEMENT SHALL BE CONTINUOUS THROUGH MASONRY LINTELS AND BOND BEAMS U.N.O..
4. AT OPENINGS WHERE STEEL BEAM LINTELS ARE PROVIDED, REINFORCE THE JAMB CELL TO THE BEARING ELEVATION OF THE LINTEL, AND REINFORCE THE NEXT ADJACENT CELL PAST THE END OF THE BEAM FULL HEIGHT AS SHOWN IN DETAIL 7/S2.1
5. PROVIDE MINIMUM (2) LEGS OF 9 GAUGE (W1.7) HORIZONTAL JOINT REINFORCING AT 16" O.C. MAX. SPACING

5 / S2.1 CMU MINIMUM WALL REINFORCING REQUIREMENTS

SCALE: NOT TO SCALE

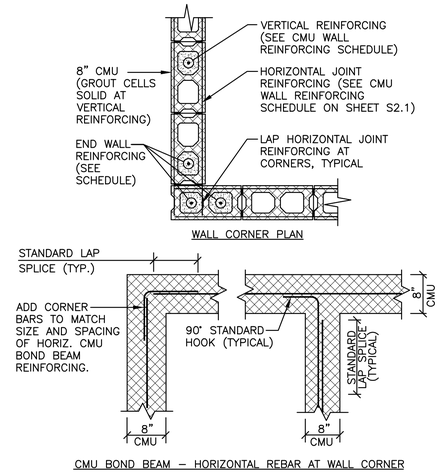

4 / S2.1 CMU WALL CORNER REINFORCING DETAIL

SCALE: NOT TO SCALE

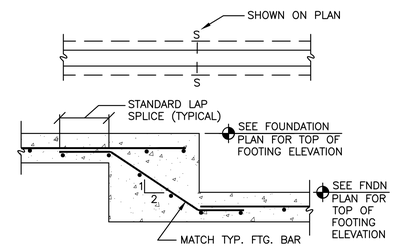

3 / S2.1 FOOTING STEP DETAIL

SCALE: NOT TO SCALE

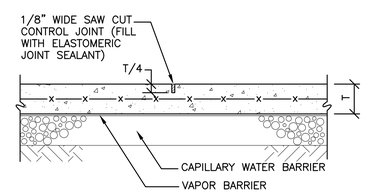

NOTE: SEE FOUNDATION PLAN FOR SLAB THICKNESS, VAPOR BARRIER, CAPILLARY WATER BARRIER, AND SLAB REINFORCING. VAPOR BARRIER NOT REQUIRED AT EXTERIOR SLABS.

2 / S2.1 SLAB CONTROL JOINT DETAIL

SCALE: NOT TO SCALE

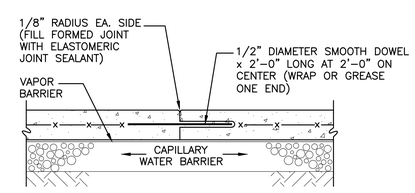

NOTES:

1. SEE FOUNDATION PLAN FOR SLAB THICKNESS, VAPOR BARRIER, CAPILLARY WATER BARRIER, AND SLAB REINFORCING REQUIREMENTS. VAPOR BARRIER NOT REQUIRED AT EXTERIOR SLAB.
2. THIS DETAIL APPLIES ONLY AT THE INTERSECTION OF TWO SEPARATE SLAB POURS (COLD JOINT).
3. DISCONTINUE SLAB REINFORCING AT JOINT.

1 / S2.1 SLAB CONSTRUCTION JOINT DETAIL

SCALE: NOT TO SCALE

LINTEL SCHEDULE

UNLESS OTHERWISE NOTED ON THE DRAWINGS, USE THE FOLLOWING SCHEDULE FOR LINTELS AND HEADERS IN NEW MASONRY CONSTRUCTION.

1. OPENINGS FOR ROUND DUCTS, PIPING, AND ELEC. CONDUIT ARE NOT SHOWN. SLEEVE OPENINGS BETWEEN 4 AND 12 INCHES IN DIAMETER WITH SCHEDULE 40 STEEL PIPE PER THE COORDINATION SECTION OF THE GENERAL NOTES.
2. MINIMUM BEARING FOR MASONRY LINTELS IS 8". FILL CMU CELLS BELOW BEARING WITH 3,000 PSI GROUT AND REINFORCE PER CMU WALL SCHEDULE.

8" CMU WALLS

1. FOR CLEAR SPANS LESS THAN 4'-0", PROVIDE AN 8" DEEP BOND BEAM LINTEL WITH (2) #4 BARS TOP AND BOTTOM.

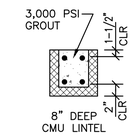

CMU WALL REINFORCING SCHEDULE

REINFORCING OF CMU WALLS SHALL BE AS FOLLOWS U.N.O.

WALL DESCRIPTION	REINFORCING REQUIRED
8" CMU EXTERIOR WALLS	#5 AT 48" O.C.
8" CMU INTERIOR WALLS	#4 AT 48" O.C.

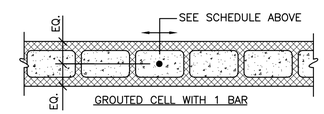

REINFORCING NOTES:

1. ALL BLOCK IN REINFORCED CMU WALLS SHALL BE REINFORCED CONTINUOUSLY FROM FOOTING TO TOP OF WALL U.N.O. GROUT LIFTS SHALL BE LIMITED TO A MAXIMUM OF 5'-0" IN HEIGHT.
2. GROUT 1 CMU CELL WITH SCHEDULED REINFORCING AT SIDES OF ALL OPENINGS LESS THAN OR EQUAL TO 4'-0" WIDE, AT CORNERS OF WALLS, AND AT DISCONTINUOUS ENDS OF WALLS.
3. GROUT 2 CMU CELLS SOLID WITH SCHEDULED REINFORCING AT SIDES OF OPENINGS GREATER THAN 4'-0" WIDE BUT LESS THAN 6'-0" WIDE.
4. GROUT 3 CELLS SOLID WITH SCHEDULED REINFORCING AT SIDES OF OPENINGS GREATER THAN 6'-0" WIDE.
5. ALL VERTICAL CMU WALL REINFORCING SHALL HAVE STANDARD LAP SPLICES PER THE LAP SPLICE SCHEDULE ON SHEET S2.1
6. HORIZONTAL JOINT REINFORCING SHALL BE 9 GAUGE, GALVANIZED, LADDER-TYPE JOINT REINFORCING AT 16" ON CENTER VERTICAL SPACING.

REBAR SPLICE AND HOOK SCHEDULE

REBAR SPLICE AND HOOK DIMENSIONS IN REINF. CONCRETE

F'c = 4,000 AND 4,500 PSI

ASTM BAR SIZE	LD	CLASS B LAP	TOP BAR LAP	LDH
3	12"	12"	16"	7-1/2"
4	12"	15"	20"	9-1/2"
5	15"	19"	24"	12"
6	17"	23"	29"	14-1/2"
7	25"	33"	43"	17"

REBAR SPLICE AND HOOK DIMENSIONS IN REINF. CMU WALLS AND BOND BEAMS

ASTM BAR SIZE	LD	LAP	LDH
3	13-1/2"	19"	4-1/2"
4	18"	25"	6"
5	22-1/2"	31"	7-1/2"
6	27"	54"	8-1/2"

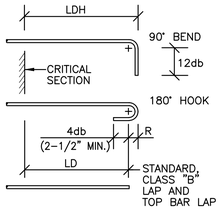

LD – STANDARD DEVELOPMENT LENGTH OF BAR

LDH – STANDARD DEVELOPMENT LENGTH OF HOOK

F'c – SPECIFIED COMPRESSIVE STRENGTH OF CONCRETE

db – BAR DIAMETER PER ASTM

NOTES:

TOP BAR – DEFINED AS A BAR LOCATED SUCH THAT 12 IN. OR MORE OF FRESH CONCRETE IS CAST IN THE MEMBER BELOW THE SPLICE.

MINIMUM OUTSIDE RADIUS OF BEND, R, SHALL BE 4db.

Dewberry

Dewberry Engineers Inc.
4805 Lake Brook Drive, Suite 200
Glen Allen, Virginia 23060
PHONE: 804.290.7957
FAX: 804.290.7928
www.dewberry.com

ZION CROSSROADS
WATER BOOSTER PUMP STATION
AND WASTEWATER PUMP STATION

FLUVANNA COUNTY
DEPARTMENT OF PUBLIC WORKS

FLUVANNA COUNTY, VA

KEY PLAN

SEAL

COMMONWEALTH OF VIRGINIA
JOSEPH ALLEN WOLHAR
Lic. No. 035964
5-4-2018
PROFESSIONAL ENGINEER

SCALE

No.	DATE	BY	Description

REVISIONS

DRAWN BY	STAFF
APPROVED BY	JAW
CHECKED BY	MKM
DATE	MAY 2018

TITLE

WBS
STRUCTURAL
SCHEDULES
AND DETAILS

PROJECT NO. 50078863

S2.1

BOS 2019-01-09 p.1445/1491

Dewberry

Dewberry Engineers Inc.
4805 Lake Brook Drive, Suite 200
Glen Allen, Virginia 23060
PHONE: 804.290.7957
FAX: 804.290.7928
www.dewberry.com

ROOF FRAMING PLAN NOTES:

1. SEE SHEET S2.0 FOR GENERAL STRUCTURAL NOTES.
2. TRUSS BEARING ELEVATIONS SHALL BE (+10'–1 1/2") REFERENCED TO FINISHED FLOOR ELEVATION 448.00'
3. TOP OF STRUCTURAL STEEL ELEVATIONS ARE SHOWN ON PLAN THUS (+X'–X") AND ARE REFERENCED TO FINISHED FLOOR ELEVATION 488.00'.
4. ROOF SHEATHING SHALL BE 5/8" APA–RATED STRUCTURAL I SHEATHING, 32/16 SPAN RATING, EXPOSURE 1 (INTERIOR GRADE WITH EXTERIOR GLUE), 48" X 96" PANELS. ATTACH TO METAL–PLATE–CONNECTED WOOD TRUSSES WITH 10d NAILS AT 6" ON CENTER AT SUPPORTED PANEL EDGES AND WITH 10d NAILS AT 12" ON CENTER AT INTERMEDIATE SUPPORTS.
5. CONTRACTOR TO SUBMIT TRUSS LAYOUT PLAN WITH TRUSS SHOP DRAWINGS. TRUSS LAYOUT PLAN, SHOP DRAWINGS, AND TRUSS CALCULATIONS ARE TO BE PREPARED BY THE TRUSS DESIGNER AND BEAR THE SEAL AND SIGNATURE OF A PROFESSIONAL ENGINEER REGISTERED IN THE COMMONWEALTH OF VIRGINIA. THE TRUSS SPACING SHALL NOT EXCEEED 2'–0" ON CENTER. SEE "METAL–PLATE–CONNECTED WOOD TRUSSES" SECTION OF THE GENERAL STRUCTURAL NOTES FOR ADDITIONAL TRUSS DESIGN REQUIREMENTS.
6. GABLE TRUSSES SHALL BE DESIGNED FOR COMPONENT WIND LOAD FORCE APPLIED PERPENDICULAR TO THEIR PROFILE.
7. PROVIDE CONTINUOUS BRIDGING AT TRUSS BOTTOM CHORDS AS REQUIRED BY T.P.I. STANDARDS.
8. TRUSS HANDLING, INSTALLATION, AND BRACING SHALL BE PER TRUSS PLATE INSTITUTE HIP–91 SUMMARY SHEET.
9. SEE SHEET S2.1 FOR LINTEL SCHEDULE AND CMU WALL REINFORCING SCHEDULE.

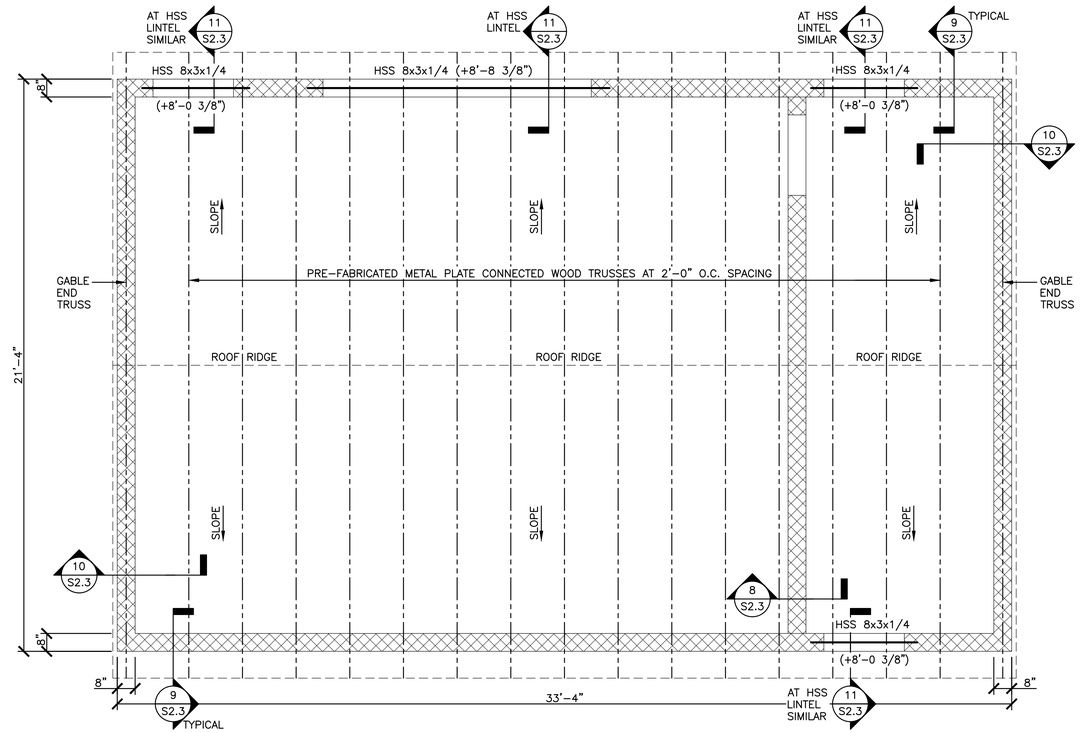

2 S2.2 WBS ROOF FRAMING PLAN
SCALE: 3/8" = 1'–0"

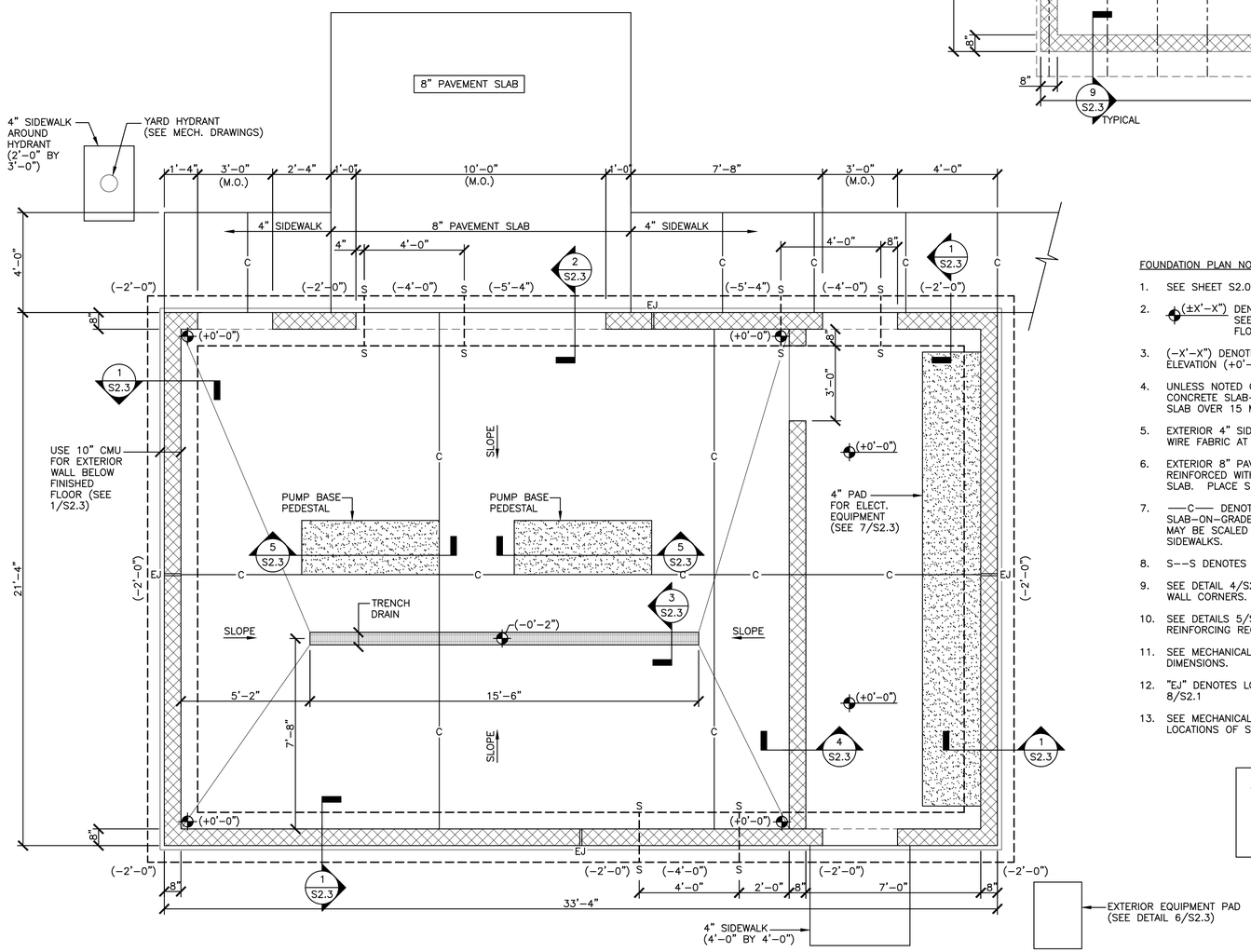

FOUNDATION PLAN NOTES:

1. SEE SHEET S2.0 FOR GENERAL STRUCTURAL NOTES.
2. (±X'–X") DENOTES FINISHED FLOOR ELEVATION OF STRUCTURAL SLAB. SEE MECHANICAL DRAWINGS AND SITE PLAN FOR EXACT FLOOR ELEVATION.
3. (–X'–X") DENOTES TOP OF FOOTING ELEVATION REFERENCED FROM FINISH FLOOR ELEVATION (+0'–0").
4. UNLESS NOTED OTHERWISE, TYPICAL FLOOR CONSTRUCTION SHALL BE 6" THICK CONCRETE SLAB–ON–GRADE WITH #4 AT 12" O.C. EACH WAY AT MID–DEPTH OF SLAB OVER 15 MIL VAPOR BARRIER AND 4" #57 STONE BASE.
5. EXTERIOR 4" SIDEWALK SLAB SHALL BE REINFORCED WITH 6x6 W1.4xW1.4 WELDED WIRE FABRIC AT MID–DEPTH OF SLAB. PLACE SLAB OVER 4" #57 STONE BASE.
6. EXTERIOR 8" PAVEMENT SLAB ADJACENT TO ROLL–UP DOOR SHALL BE REINFORCED WITH #4 BARS AT 12" O.C. SPACING EACH WAY AT MID–DEPTH OF SLAB. PLACE SLAB OVER 4" #57 STONE BASE.
7. ——C—— DENOTES CONTROL JOINT OR CONSTRUCTION JOINT LOCATION IN SLAB–ON–GRADE. SEE DETAILS 1/S2.1 AND 2/S2.1. CONTROL JOINT LOCATIONS MAY BE SCALED FROM DRAWING. PROVIDE TOOLED JOINTS IN EXTERIOR SIDEWALKS.
8. S––S DENOTES FOOTING STEP, SEE DETAIL 3/S2.1
9. SEE DETAIL 4/S2.1 FOR ADDITIONAL REINFORCING REQUIRED AT CMU BOND BEAM WALL CORNERS.
10. SEE DETAILS 5/S2.1, 6/S2.1, AND 7/S2.1 FOR ADDITIONAL CMU WALL REINFORCING REQUIREMENTS.
11. SEE MECHANICAL DRAWINGS FOR WALL DIMENSIONS AND WALL OPENING DIMENSIONS.
12. "EJ" DENOTES LOCATION OF MASONRY WALL EXPANSION JOINTS. SEE DETAIL 8/S2.1
13. SEE MECHANICAL DRAWINGS FOR FLOOR DRAINS AND PIPING. COORDINATE EXACT LOCATIONS OF SLOPES AND DRAINS IN FLOOR SLABS WITH MECHANICAL DRAWINGS.

GENERATOR SLAB AND ACCESS PLATFORM

SEE SHEET S2.4 FOR GENERATOR SLAB AND ACCESS PLATFORM DETAILS.

SEE SITE PLAN FOR GENERATOR LOCATION.

1 S2.2 WBS FOUNDATION PLAN
SCALE: 3/8" = 1'–0"

ZION CROSSROADS
WATER BOOSTER PUMP STATION
AND WASTEWATER PUMP STATION
FLUVANNA COUNTY
DEPARTMENT OF PUBLIC WORKS
FLUVANNA COUNTY, VA

KEY PLAN

SEAL
COMMONWEALTH OF VIRGINIA
JOSEPH ALLEN WOLHAR
Lic. No. 035964
5-4-2018
PROFESSIONAL ENGINEER

SCALE

No.	DATE	BY	Description

REVISIONS

DRAWN BY	STAFF
APPROVED BY	JAW
CHECKED BY	MKM
DATE	MAY 2018

TITLE

WBS
FOUNDATION PLAN
AND
ROOF FRAMING PLAN

PROJECT NO. 50078863

S2.2

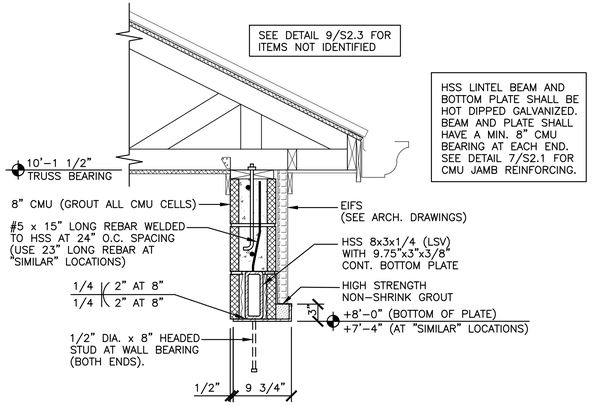

11 S2.3 HSS LINTEL DETAIL
SCALE: 1" = 1'-0"

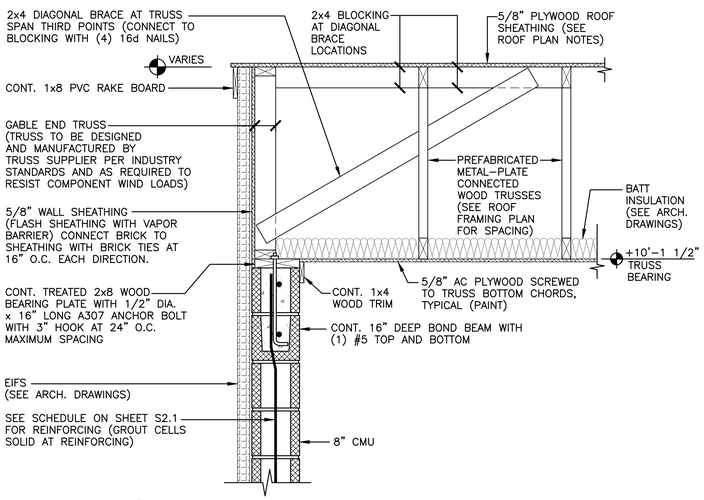

10 S2.3 GABLE END WALL DETAIL
SCALE: 1" = 1'-0"

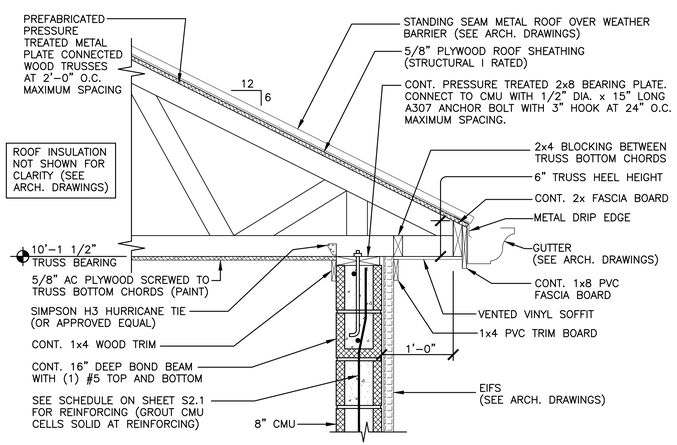

9 S2.3 TRUSS BEARING DETAIL
SCALE: 1" = 1'-0"

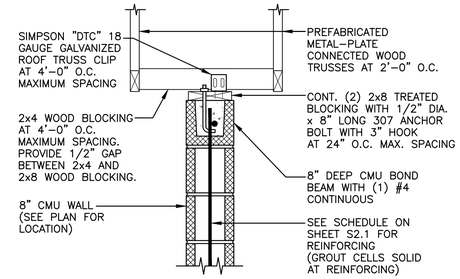

8 S2.3 INTERIOR CMU WALL BRACING DETAIL
SCALE: 3/4" = 1'-0"

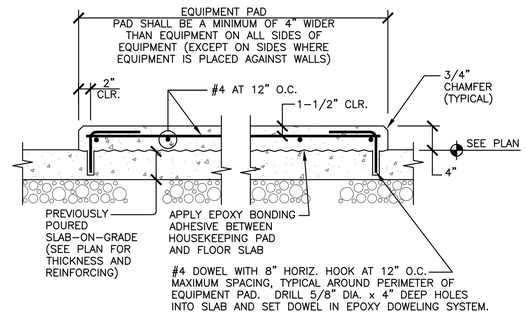

7 S2.3 INTERIOR EQUIPMENT PAD DETAIL
SCALE: NOT TO SCALE

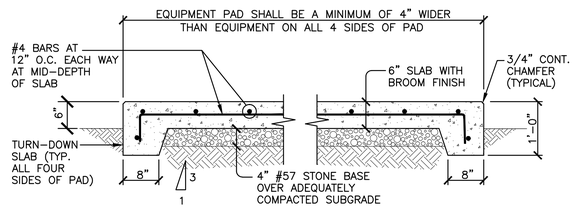

6 S2.3 EXTERIOR EQUIPMENT PAD DETAIL
SCALE: 3/4" = 1'-0"

PUMP PAD NOTES:

1. PUMP PAD PLAN DIMENSIONS SHALL EXTEND A MINIMUM OF 3" BEYOND PUMP PLAN DIMENSIONS ON ALL 4 SIDES OF PAD. COORDINATE PAD DIMENSIONS WITH PUMP MANUFACTURER REQUIREMENTS AND GAIN ENGINEER APPROVAL PRIOR TO POURING.
2. COORDINATE EXACT PAD LOCATIONS IN BUILDING WITH MECHANICAL DRAWINGS.

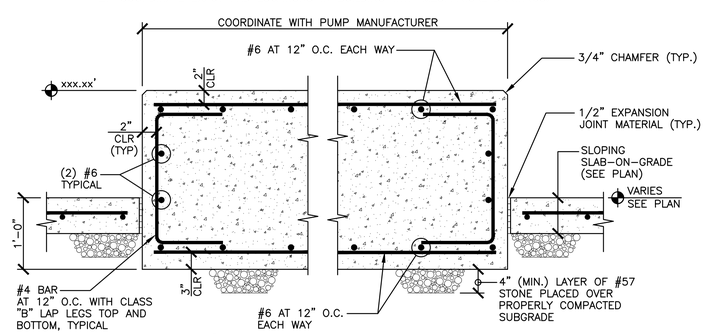

5 S2.3 PUMP BASE DETAIL
SCALE: 3/4" = 1'-0"

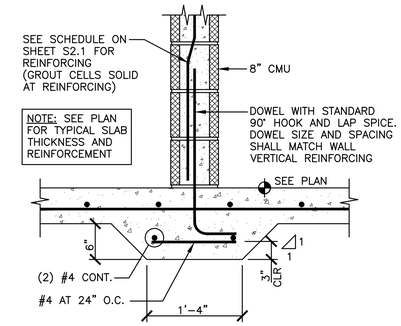

4 S2.3 THICKENED SLAB DETAIL
SCALE: 1" = 1'-0"

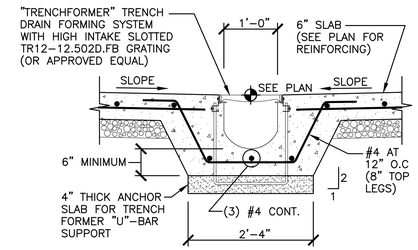

3 S2.3 TRENCH DRAIN DETAIL
SCALE: 3/4" = 1'-0"

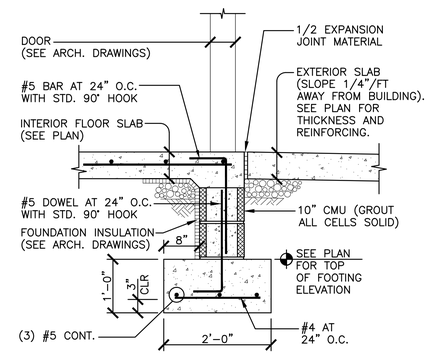

2 S2.3 DOOR THRESHOLD DETAIL
SCALE: 3/4" = 1'-0"

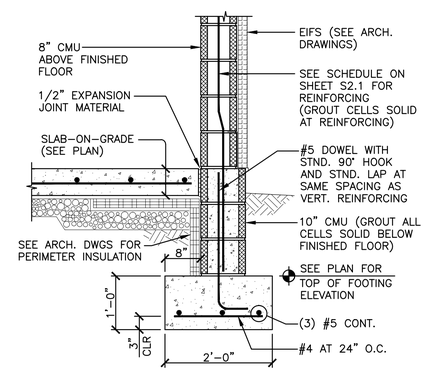

1 S2.3 WALL FOOTING DETAIL
SCALE: 3/4" = 1'-0"

Dewberry

Dewberry Engineers Inc.
4805 Lake Brook Drive, Suite 200
Glen Allen, Virginia 23060
PHONE: 804.290.7957
FAX: 804.290.7928
www.dewberry.com

ZION CROSSROADS
WATER BOOSTER PUMP STATION
AND WASTEWATER PUMP STATION
FLUVANNA COUNTY
DEPARTMENT OF PUBLIC WORKS
FLUVANNA COUNTY, VA

KEY PLAN

SEAL
COMMONWEALTH OF VIRGINIA
JOSEPH ALLEN WOLHAR
Lic. No. 035964
5-4-2018
PROFESSIONAL ENGINEER

SCALE

No.	DATE	BY	Description

REVISIONS

DRAWN BY	STAFF
APPROVED BY	JAW
CHECKED BY	MKM
DATE	MAY 2018

TITLE
WBS
STRUCTURAL
DETAILS

PROJECT NO. 50078863

S2.3

Dewberry

Dewberry Engineers Inc.
4805 Lake Brook Drive, Suite 200
Glen Allen, Virginia 23060
PHONE: 804.290.7957
FAX: 804.290.7928
www.dewberry.com

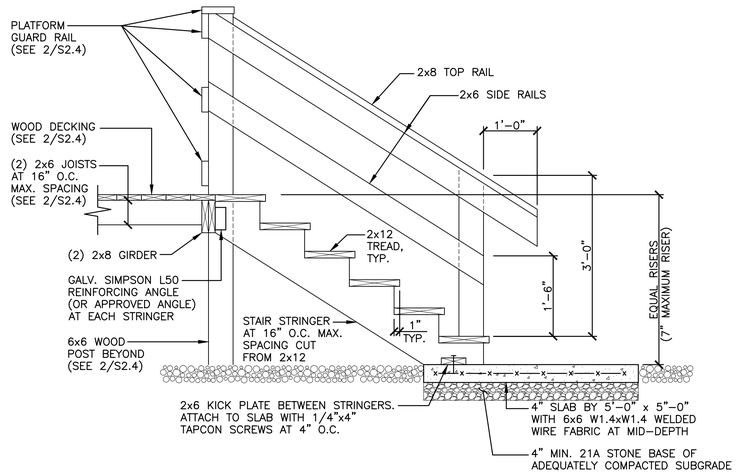

3 / S2.4 GENERATOR PLATFORM STAIR SECTION
SCALE: 3/4" = 1'-0"

NOTES:

1. ALL FASTENERS, POST BASES, AND POST CAPS SHALL BE GALVANIZED OR STAINLESS STEEL.
2. ALL SAWN LUMBER SHALL BE PRESSURE TREATED.

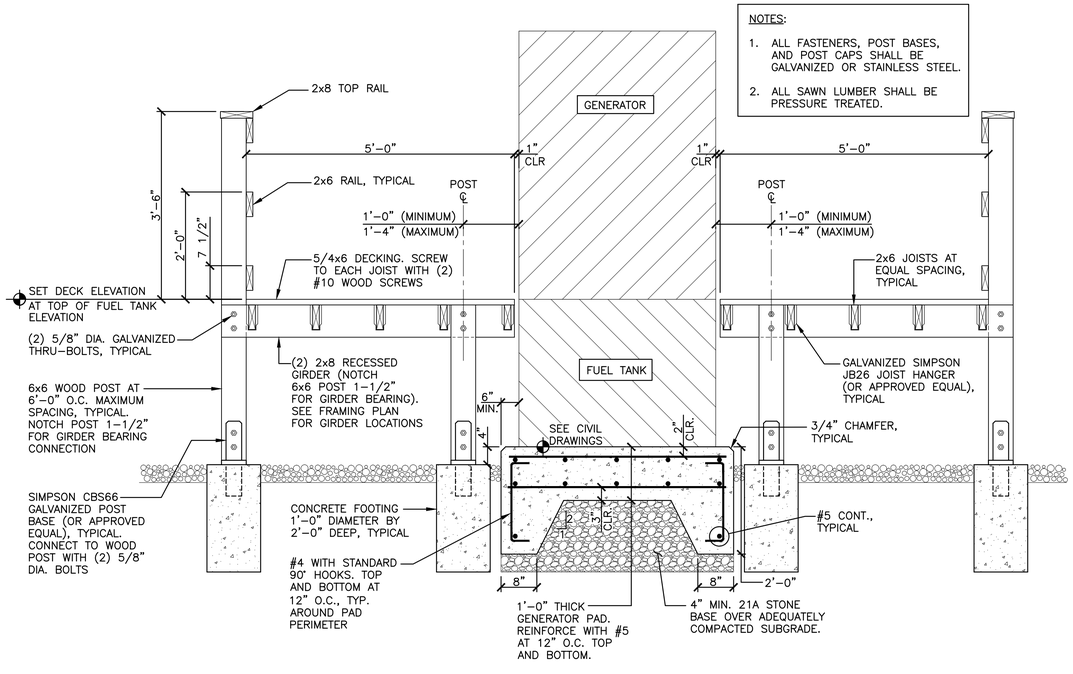

2 / S2.4 GENERATOR PAD AND PLATFORM SECTION
SCALE: 3/4" = 1'-0"

GENERATOR ACCESS PLATFORM FRAMING PLAN NOTES

1. SEE S0.1 FOR GENERAL STRUCTURAL NOTES.
2. SEE SITE PLANS FOR LOCATION OF GENERATOR ON SITE.
3. STAIR LOCATION SHOWN IS SCHEMATIC. COORDINATE ACTUAL LOCATION WITH SITE PLAN.
4. ALL SAWN LUMBER SHALL BE PRESSURE TREATED, SOUTHERN PINE NO. 2 OR BETTER.
5. ALL FASTENERS AND POST BASES SHALL BE GALVANIZED OR STAINLESS STEEL.
6. - - - - - - - - DENOTES (2) 2x6 X-BRACING BETWEEN POSTS. CONNECT BRACES TO POST FACE WITH (1) 5/8" DIA. THRU-BOLT.

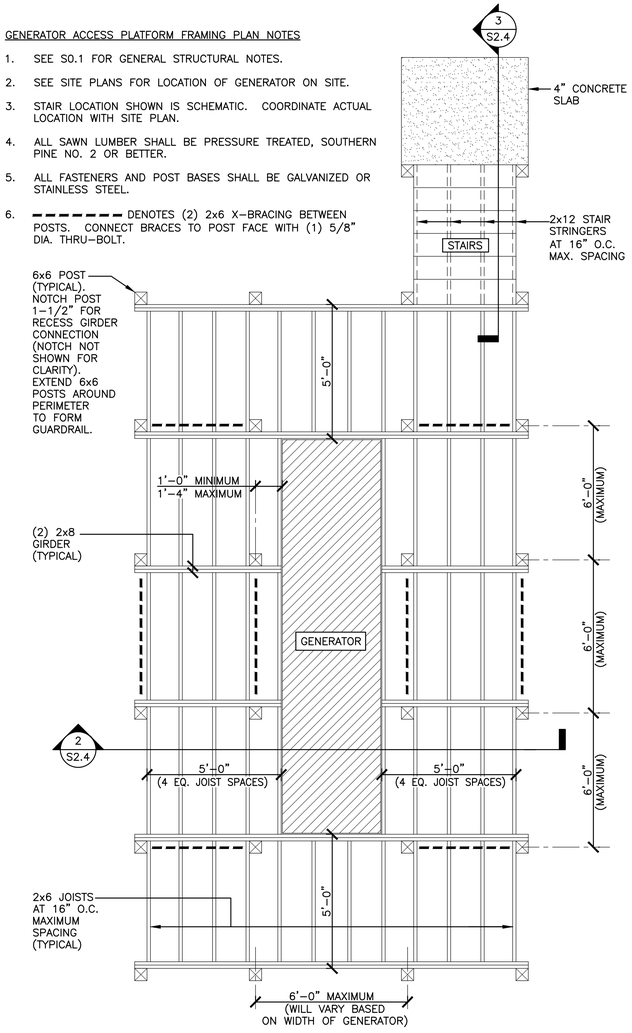

1 / S2.4 GENERATOR PLATFORM FRAMING PLAN
SCALE: 3/8" = 1'-0"

ZION CROSSROADS
WATER BOOSTER PUMP STATION
AND WASTEWATER PUMP STATION
FLUVANNA COUNTY
DEPARTMENT OF PUBLIC WORKS
FLUVANNA COUNTY, VA

KEY PLAN

SEAL

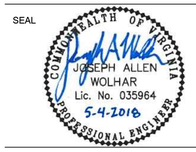

SCALE

No.	DATE	BY	Description

REVISIONS

DRAWN BY	STAFF
APPROVED BY	JAW
CHECKED BY	MKM
DATE	MAY 2018

TITLE

WBS
GENERATOR PAD
AND PLATFORM
DETAILS

PROJECT NO. 50078863

S2.4

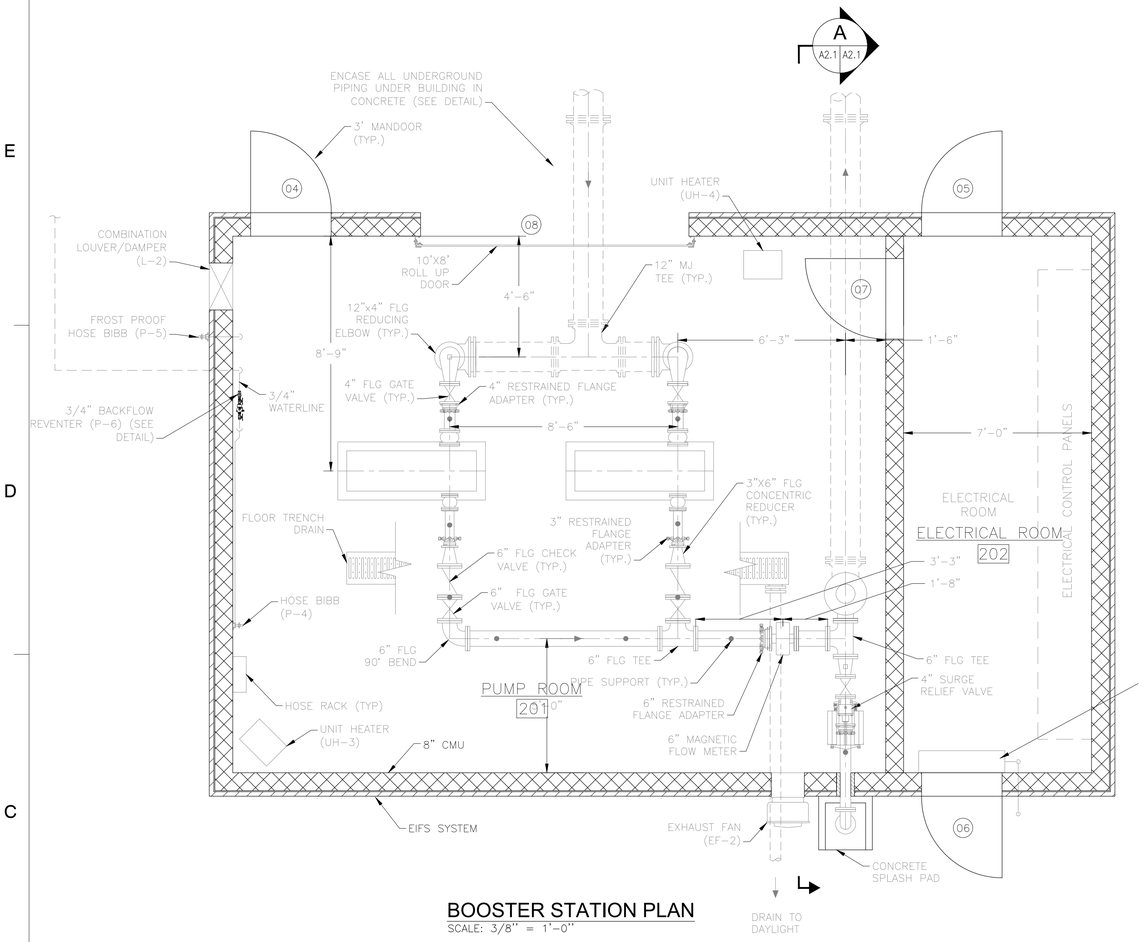

BOOSTER STATION PLAN
SCALE: 3/8" = 1'-0"

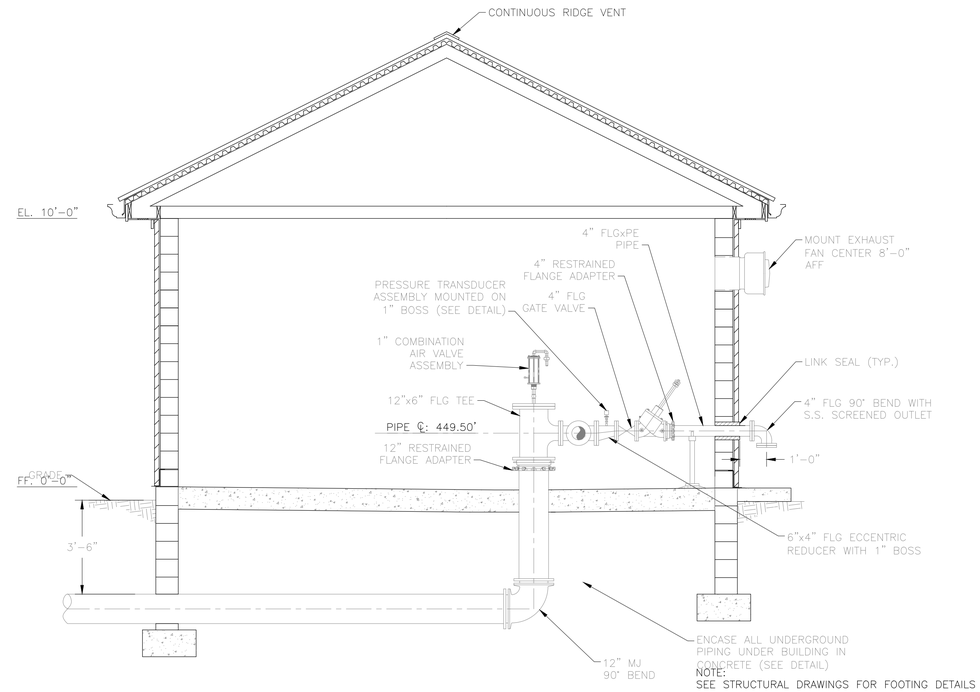

NOTE:
SEE STRUCTURAL DRAWINGS FOR FOOTING DETAILS

A BOOSTER STATION SECTION
A2.1 A2.1 SCALE: 3/8" = 1'-0"

WBS SIGNAGE SCHEDULE

LOCATION		SIGNAGE	TYPE	REMARKS
DOOR 04	EXT	WBS MECHANICAL ROOM	EXTERIOR USE, ENGRAVED, 1-INCH WHITE TEXT, BLACK PLATE	
DOOR 05	EXT	WBS ELECTRICAL ROOM	EXTERIOR USE, ENGRAVED, 1-INCH WHITE TEXT, BLACK PLATE	
DOOR 06	EXT	WBS ELECTRICAL ROOM	EXTERIOR USE, ENGRAVED, 1-INCH WHITE TEXT, BLACK PLATE	
DOOR 07	INT / RM 202	WBS MECHANICAL ROOM	EXTERIOR USE, ENGRAVED, 1-INCH WHITE TEXT, BLACK PLATE	
	INT / RM 201	WBS ELECTRICAL ROOM	EXTERIOR USE, ENGRAVED, 1-INCH WHITE TEXT, BLACK PLATE	
RM 201	UH-3	UH-3	EXTERIOR USE, ENGRAVED, 1/2-INCH WHITE TEXT, BLACK PLATE	MOUNT ON WALL OR UNIT
	UH-4	UH-4	EXTERIOR USE, ENGRAVED, 1/2-INCH WHITE TEXT, BLACK PLATE	MOUNT ON WALL OR UNIT
	FAN	EF-2	EXTERIOR USE, ENGRAVED, 1/2-INCH WHITE TEXT, BLACK PLATE	MOUNT ON WALL OR UNIT
	L-2	L-2	EXTERIOR USE, ENGRAVED, 1/2-INCH WHITE TEXT, BLACK PLATE	MOUNT ON WALL OR UNIT
	P-3	P-3	EXTERIOR USE, ENGRAVED, 1/2-INCH WHITE TEXT, BLACK PLATE	MOUNT ON PUMP 3
	P-4	P-4	EXTERIOR USE, ENGRAVED, 1/2-INCH WHITE TEXT, BLACK PLATE	MOUNT ON PUMP 4
RM 202	DMSS2	DMSS-2	EXTERIOR USE, ENGRAVED, 1/2-INCH WHITE TEXT, BLACK PLATE	MOUNT ON WALL OR UNIT
BLDG EXTERIOR	CU2	CU-2	EXTERIOR USE, ENGRAVED, 1-INCH WHITE TEXT, BLACK PLATE	MOUNT ON UNIT

NOTES:
1. ALL SIGNS SHALL BE MOUNTED WITH 316SS SCREWS UNLESS OTHERWISE NOTED
2. COORDINATE WITH ENGINEER LOCATION OF SIGNS.
3. ELECTRICAL LABELING PER ELECTRICAL SPECIFICATIONS.

ROOM FINISH SCHEDULE

ROOM		FLOOR	WALLS								CEILING			REMARKS
			NORTH		EAST		SOUTH		WEST					
NUMBER	NAME		MATERIAL	FINISH	MATERIAL	FINISH	MATERIAL	FINISH	MATERIAL	FINISH	MATERIAL	FINISH	HEIGHT	
201	PUMP ROOM	SLD. CONC.	CMU	EP. PT.	CMU	EP. PT.	CMU	EP. PT.	CMU	EP. PT.	5/8" AC PLYWOOD	EP. PT.	10'-0"	
202	ELECTRICAL ROOM	SLD. CONC.	CMU	EP. PT.	CMU	EP. PT.	CMU	EP. PT.	CMU	EP. PT.	5/8" AC PLYWOOD	EP. PT.	10'-0"	

ABBREVIATIONS LEGEND

EXIST.	EXISTING
FLR	FLOOR
GWB	WALL BOARD
UNO.	UNLESS NOTED OTHERWISE
THICK	THICKNESS
EP. PT.	EPOXY PAINT
MR GWB	MOLD AND MOISTURE RESISTANT GYPSUM WALL BOARD
SLD. CONC	TROWEL FINISHED SEALED CONCRETE
C.B.	CEMENT BOARD

NOTES:
1. SEE SPECIFICATIONS FOR PAINT DETAILS

DOOR SCHEDULE

NUMBER		DOOR							FRAME				HDW	REMARKS
DOOR #	ROOM #	ROOM NAME	WIDTH	HEIGHT	THICK	MATERIAL	FINISH	TYPE	MATERIAL	HEAD	JAMB	TYPE	SET #	NOTES
04	201	PUMP ROOM	3'-0"	6'-8"	1 3/4"	HM	PAINT	C	HM	H2	J2	1	01	
05	202	ELECTRICAL ROOM	3'-0"	6'-8"	1 3/4"	HM	PAINT	C	HM	H2	J2	1	01	
06	202	ELECTRICAL ROOM	3'-0"	6'-8"	1 3/4"	HM	PAINT	C	HM	H2	J2	1	01	
07	202	ELECTRICAL ROOM	3'-0"	6'-8"	1 3/4"	HM	PAINT	C	HM	H1	J1	1	02	
08	201	PUMP ROOM	10'-0"	8'-0"	-	ST	PAINT	D	-	H3	J3	-	-	

Dewberry

Dewberry Engineers Inc.
4805 Lake Brook Drive, Suite 200
Glen Allen, Virginia 23060
PHONE: 804.290.7957
FAX: 804.290.7928
www.dewberry.com

ZION CROSSROADS
WATER BOOSTER PUMP STATION
AND WASTEWATER PUMP STATION
FLUVANNA COUNTY
DEPARTMENT OF PUBLIC WORKS
FLUVANNA COUNTY, VA.

KEY PLAN

SEAL
COMMONWEALTH OF VIRGINIA
DANYLO A. VILLIHAUER
Lic. No. 046419
5/4/2018
PROFESSIONAL ENGINEER

SCALE

No.	DATE	BY	Description

REVISIONS

DRAWN BY BMM & JEH
APPROVED BY DAV
CHECKED BY BJH
DATE MAY 2018

TITLE
WBS LAYOUT

PROJECT NO. 50078863

A2.0

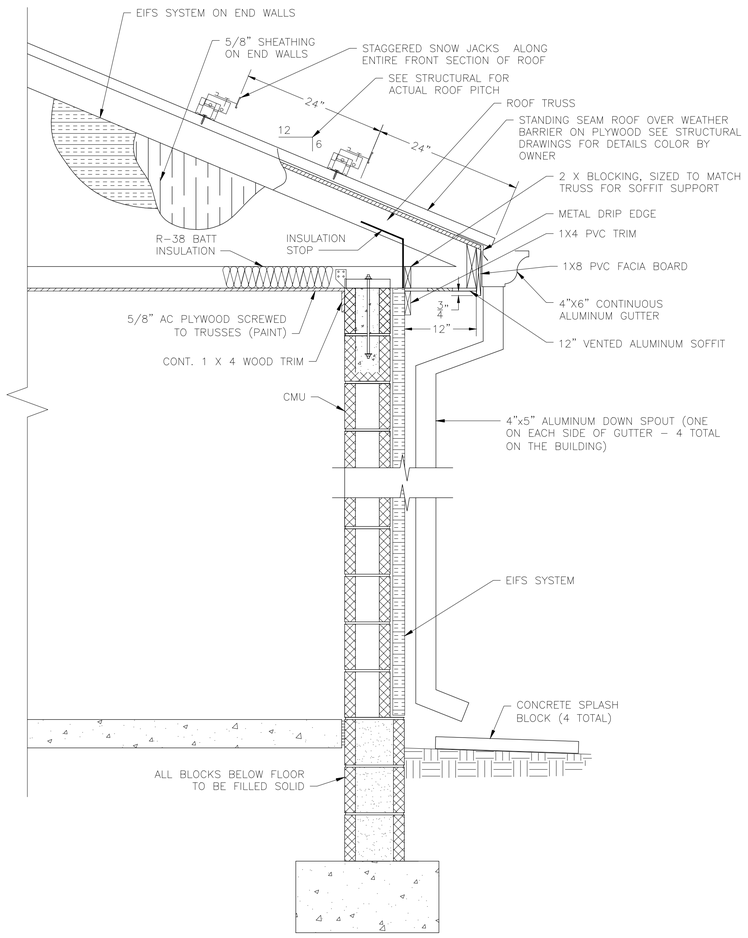

WALL CROSS SECTION DETAIL

SCALE: NOT TO SCALE

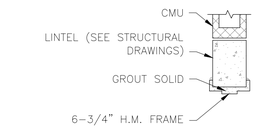

H1

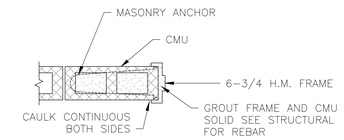

J1

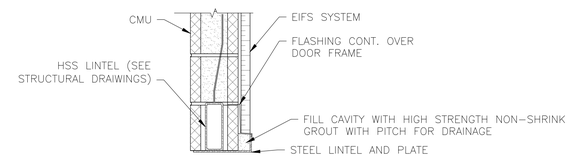

H2

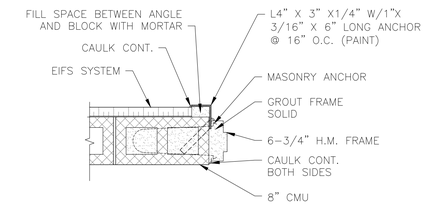

J2

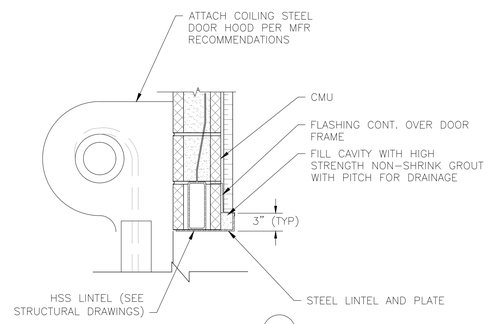

H3

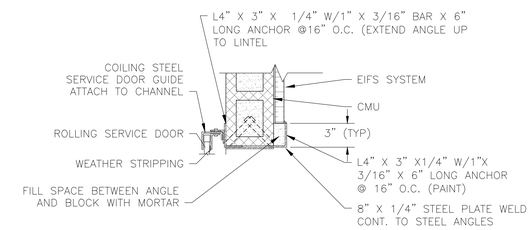

J3

DOOR HEAD AND JAMB DETAILS

SCALE: NOT TO SCALE

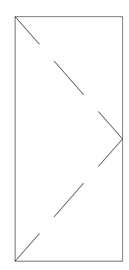

C

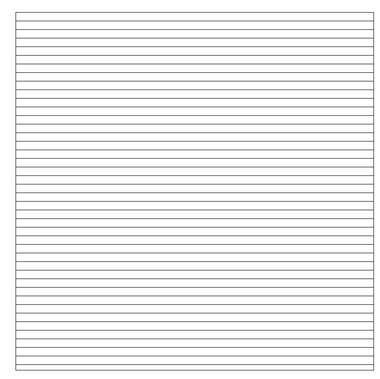

D

DOOR ELE□ATIONS

SCALE: NOT TO SCALE

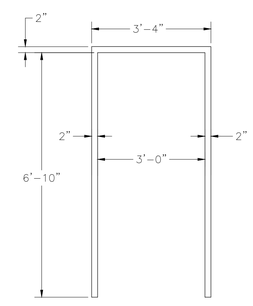

3

DOOR FRAME ELE□ATIONS

SCALE: NOT TO SCALE

Dewberry

Dewberry Engineers Inc.
4805 Lake Brook Drive, Suite 200
Glen Allen, Virginia 23060
PHONE: 804.290.7957
FAX: 804.290.7928
www.dewberry.com

ZION CROSSROADS
WATER BOOSTER PUMP STATION
AND WASTEWATER PUMP STATION

FLUVANNA COUNTY
DEPARTMENT OF PUBLIC WORKS

FLUVANNA COUNTY, VA.

KEY PLAN

SEAL

COMMONWEALTH OF VIRGINIA
DANYLO A. VILLHAUER
Lic. No. 046419
5/4/2018
PROFESSIONAL ENGINEER

SCALE

No.	DATE	BY	Description

REVISIONS

DRAWN BY	BMM & JEH
APPROVED BY	DAV
CHECKED BY	BJH
DATE	MAY 2018

TITLE

WBS
DETAILS

PROJECT NO. 50078863

A2.1

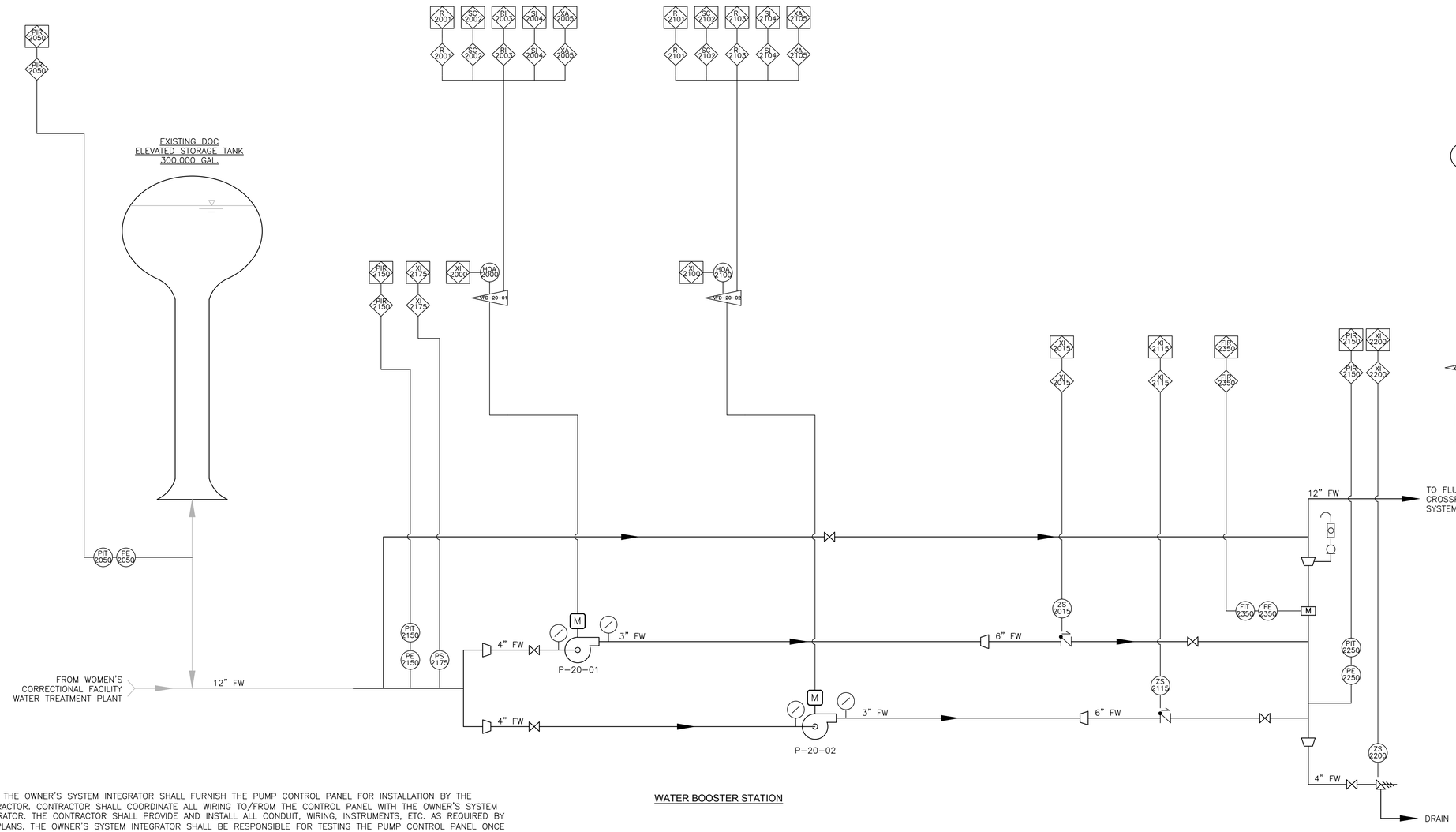

WATER BOOSTER STATION

NOTE: THE OWNER'S SYSTEM INTEGRATOR SHALL FURNISH THE PUMP CONTROL PANEL FOR INSTALLATION BY THE CONTRACTOR. CONTRACTOR SHALL COORDINATE ALL WIRING TO/FROM THE CONTROL PANEL WITH THE OWNER'S SYSTEM INTEGRATOR. THE CONTRACTOR SHALL PROVIDE AND INSTALL ALL CONDUIT, WIRING, INSTRUMENTS, ETC. AS REQUIRED BY THE PLANS. THE OWNER'S SYSTEM INTEGRATOR SHALL BE RESPONSIBLE FOR TESTING THE PUMP CONTROL PANEL ONCE INSTALLED BY THE CONTRACTOR.

	FIRST LETTER		SECOND LETTER		
	MEASURED OR INITIATING VARIABLE	MODIFIER	READOUT OR PASSIVE FUNCTION	OUTPUT FUNCTION	MODIFIER
A	ANALYSIS		ALARM		
B	BURNER, COMBUSTION				
C				CONTROL	CLOSED
D	DENSITY	DIFFERENTIAL	DATASTORE		
E	VOLTAGE		SENSOR – PRIMARY ELEMENT		
F	FLOW RATE	RATIO (FRACTION)			
G			GLASS, VIEWING DEVICE		
H	HAND				HIGH
I	CURRENT (ELECTRICAL)		INDICATE		
J	POWER	SCAN			
K	TIME, TIME SCHEDULE	TIME RATE OF CHANGE		CONTROL STATION	
L	LEVEL		LIGHT		LOW
M	MOTOR	MOMENTARY			MIDDLE, INTERMEDIATE
N	TORQUE		ISOLATOR		
O			ORIFICE, RESTRICTION		OPEN
P	PRESSURE, VACUUM		POINT – TEST CONNECTION		
Q	EVENT OR STATUS	INTEGRATE, TOTALIZE			
R	RUN		RECORD OR STORE		
S	SPEED, FREQUENCY	SAFETY		SWITCH	
T	TEMPERATURE			TRANSMIT	
U	MULTIVARIBALE		MULTIFUNCTION	MULTIFUNCTION	MULTIFUNCTION
V	VIBRATION, VOLUME, MECHANICAL ANALYSIS			VALVE, DAMPER, LOUVER	
W	WEIGHT, FORCE		WELL		
X	FAILURE OR UNCLASSIFIED	X-AXIS		COMPUTE,	
Y		Y-AXIS		CONVERT, RELAY	
				DRIVER, ACTUATOR, FINAL	
Z	POSITION, DIMINSION	Z-AXIS		CONTROL ELEMENT	

PROCESS AND INSTRUMENTATION LEGEND

ABBREVIATIONS

HP	=	HORSE POWER
M	=	MOTOR
P	=	PUMP
V	=	VALVE

GATE VALVE
BALL VALVE
PLUG VALVE
SWING CHECK VALVE
MOTOR
CENTRIFUGAL PUMP
MAGNETIC FLOW METER
PRESSURE GAUGE
REDUCER
PRESSURE RELIEF VALVE
FLOW SWITCH
AIR RELEASE VALVE
VARIABLE FREQUENCY DRIVE
SCADA SYSTEM
LOCAL PLC

BOS 2019-01-09 p.1450/1491

Dewberry

Dewberry Engineers Inc.
4805 Lake Brook Drive, Suite 200
Glen Allen, Virginia 23060
PHONE: 804.290.7957
FAX: 804.290.7928
www.dewberry.com

ZION CROSSROADS WATER BOOSTER PUMP STATION AND WASTEWATER PUMP STATION

FLUVANNA COUNTY
DEPARTMENT OF PUBLIC WORKS

FLUVANNA COUNTY, VA

KEY PLAN

SEAL

COMMONWEALTH OF VIRGINIA
DANYLO A. VILLHAUER
Lic. No. 046419
5/4/2018
PROFESSIONAL ENGINEER

SCALE

No.	DATE	BY	Description

REVISIONS

DRAWN BY	BMM & JEH
APPROVED BY	DAV
CHECKED BY	BJH
DATE	MAY 2018

TITLE

WBS
PROCESS AND
INSTRUMENTATION
DIAGRAM

PROJECT NO. 50078863

I2.0

WATER BOOSTER STATION
PLC I/O SCHEDULE

INSTRUMENT		P&ID	SIGNAL TYPE			
DESCR.	TYPE	element	DI	DO	AI	AO
Booster Pump No. 1	HOA Switch	2000	X			
P-20-01	Run/Stop	2001		X		
	VFD Speed Control	2002				X
	Status On/Off	2003	X			
	VFD Speed	2004			X	
	VFD Fail	2005	X			
Pump No. 1 Check Valve Status	Limit Switch	2015	X			
Booster Pump No. 2	HOA Switch	2100	X			
P-20-02	Run/Stop	2101		X		
	VFD Speed Control	2102				X
	Status On/Off	2103	X			
	VFD Speed	2104			X	
	VFD Fail	2105	X			
Pump No. 2 Check Valve Status	Limit Switch	2115	X			
Suction Pressure	Pressure Transducer	2150			X	
Suction Pressure Alarm	Low Pressure Switch	2175	X			
Discharge Pressure	Pressure Transducer	2250			X	
Surge Relief Valve Status	Pressure Switch	2200	X			
DOC Tank Level	Pressure Transducer	2050			X	
Effluent Flow	Magnetic	2350			X	
Standby Generator	Run Status	2500	X			
	Fail Status	2501	X			
	Fuel Tank Low Level	2502	X			
	Fuel Tank Leak	2503	X			
ATS	Position	2510	X			
	Power Available	2511	X			
Intrusion Alarms	Electrical Room Door 1	2600	X			
	Electrical Room Door 2	2601	X			
	Pump Room Door	2602	X			
	Garage Door	2603	X			
Temperature Alarm	Electrical Room High Temp.	2604	X			
Temperature Alarm	Mechanical Room Low Temp.	2605	X			
Exhaust Fan Alarm	Exhaust Fan Failure	2606	X			

NOTE: THE OWNER'S SYSTEM INTEGRATOR SHALL FURNISH THE PUMP CONTROL PANEL FOR INSTALLATION BY THE CONTRACTOR. CONTRACTOR SHALL COORDINATE ALL WIRING TO/FROM THE CONTROL PANEL WITH THE OWNER'S SYSTEM INTEGRATOR. THE CONTRACTOR SHALL PROVIDE AND INSTALL ALL CONDUIT, WIRING, INSTRUMENTS, ETC. AS REQUIRED BY THE PLANS. THE OWNER'S SYSTEM INTEGRATOR SHALL BE RESPONSIBLE FOR TESTING THE PUMP CONTROL PANEL ONCE INSTALLED BY THE CONTRACTOR.

Dewberry

Dewberry Engineers Inc.
4805 Lake Brook Drive, Suite 200
Glen Allen, Virginia 23060
PHONE: 804.290.7957
FAX: 804.290.7928
www.dewberry.com

ZION CROSSROADS
WATER BOOSTER PUMP STATION
AND WASTEWATER PUMP STATION
FLUVANNA COUNTY
DEPARTMENT OF PUBLIC WORKS
FLUVANNA COUNTY, VA

KEY PLAN

SEAL

COMMONWEALTH OF VIRGINIA
DANYLO A. VILLIHAUER
Lic. No. 046419
5/4/2018
PROFESSIONAL ENGINEER

SCALE

No.	DATE	BY	Description

REVISIONS

DRAWN BY: BMM & JEH
APPROVED BY: DAV
CHECKED BY: BJH
DATE: MAY 2018

TITLE

WBS
PROCESS AND
INSTRUMENTATION
DIAGRAMS

PROJECT NO. 50078863

I2.1

WBS GENERAL ELECTRICAL NOTES:

1. THE CONTRACTOR SHALL PERFORM THE FOLLOWING FOR POWER SERVICE:
   - 1.1. COORDINATE WITH THE LOCAL POWER COMPANY AS REQUIRED FOR THE EXTENSION OF POWER TO THE SITE. INSTALL ALL UTILITY SUPPLIED EQUIPMENT PER THE UTILITY INSTALLATION INSTRUCTIONS AND REGULATIONS.
   - 1.2. COORDINATE WITH THE UTILITY TO ENSURE THAT PANEL MBD HAS AN AIC RATING WHICH EXCEEDS THAT WHICH IS DELIVERABLE TO THE SITE.
   - 1.3. PROVIDE BELOW GRADE CONDUIT STUBOUTS AND/OR EXTENSIONS TO THE UTILITY TRANSFORMER/POWER POLE AS REQUIRED BY THE UTILITY AND FOR USE BY THE UTILITY.
2. PROVIDE AND INSTALL BONDING BUSHINGS ON ALL SERVICE CONNECTIONS AND GROUNDING LOCKNUTS ON ALL PANEL CONNECTORS.
3. SURGE PROTECTION DEVICE (SPD):
   - 3.1. FOR PANEL MBD2:
     - 3.1.1. PROVIDE AND INSTALL CURRENT TECHNOLOGY TransEnd 80 (OR EQUAL) UL 1449 3RD EDITION AND INSTALL PER THE MANUFACTURER'S INSTALLATION INSTRUCTIONS AND RECOMMENDATIONS.
   - 3.2. FOR PANELBOARDS MDP2 & PB2
     - 3.2.1. PROVIDE AND INSTALL A UL LISTED SURGE ARRESTOR AS AN INTEGRAL COMPONENT TO EACH PANELBOARD. PROVIDE SHORT CIRCUIT PROTECTION IF REQUIRED.
4. ALL WIRE INSTALLED UNDER THIS CONTRACT SHALL BE COPPER.
5. ALL EQUIPMENT SHALL BE INSTALLED IN ACCORDANCE WITH LOCAL CODES AND REGULATIONS.
6. ALL EQUIPMENT SHALL BE PROVIDED WITH LAMICOID NAMEPLATES (3/16" LETTERING MIN.).
7. ALL PANELBOARD SCHEDULES SHALL REFLECT AS-BUILT CONDITIONS.
8. REFERENCE THE CIVIL SITE PLAN FOR ALL EQUIPMENT LOCATIONS AND DISTANCES.
9. REFERENCE CIVIL/MECHANICAL DRAWINGS FOR EQUIPMENT AND SENSOR MOUNTING DETAILS AND WET WELL CONDUIT INSTALLATION DETAILS.
10. CONDUIT NOTES:
    - 10.1. DUCT BANKS SHALL UTILIZE PVC SCHEDULE-40 CONDUIT
    - 10.2. PVC COATED RIGID STEEL CONDUIT AND ACCESSORIES SHALL BE USED FOR THE FOLLOWING:
      - 10.2.1. SINGLE UNDERGROUND CONDUIT RUNS FOR MISC. 120VAC POWER CIRCUITS AND MONITORING CIRCUITS @24" BELOW GRADE WITH RED VINYL WARNING TAPE AT 6" ABOVE THE CONDUIT.
      - 10.2.2. ALL CONDUIT EXTENDING TO/FROM THE WASTE WATER WET WELL.
      - 10.2.3. PROVIDE PVC REPAIR WITH MANUFACTURERS TOUCH-UP KIT WHERE REQUIRED.
    - 10.3. GALVANIZED RIGID STEEL CONDUIT SHALL BE USED FOR ALL INTERIOR CONDUIT AND ABOVE GRADE EXTERIOR CONDUIT. STUBUPS SHALL BE MINIMUM 12" ABOVE GRADE AND OR FINISHED FLOOR.
    - 10.4. CONDUIT EXTENDED TO EQUIPMENT THAT IS LOCATED MORE THAN 2FT FROM AN ADJACENT WALL SHALL BE EXTENDED IN THE SLAB WITH THE STUBUP LOCATED ADJACENT TO AND COORDINATED WITH THE EQUIPMENT.
    - 10.5. CONDUIT REQUIRED FOR FUTURE EQUIPMENT SHALL BE PROVIDED AND INSTALLED. EACH CONDUIT SHALL BE EXTENDED TO A POINT ADJACENT TO THE EQUIPMENT. INTERIOR CONDUIT STUBUPS SHALL BE A THREADED COUPLING SET FLUSH IN THE FLOOR, CAPPED AND SEALED WITH A PULL CORD INSTALLED FOR FUTURE USE. EXTERIOR CONDUIT STUBUPS SHALL BE A THREADED COUPLING 6" ABOVE GRADE AND/OR CONCRETE PAD, CAPPED AND SEALED WITH A PULL CORD INSTALLED FOR FUTURE USE.
11. LIGHTS AND RECEPTACLES – REFERENCE EACH BUILDING'S PLAN/ELEVATION VIEWS FOR LOCATIONS AND QUANTITIES OF LIGHTS AND RECEPTACLES. CONDUIT FOR EXTERIOR LIGHTING AND RECEPTACLES SHALL BE RUN INSIDE WITH SEALED CONDUIT PENETRATIONS THROUGH THE WALL FOR EACH LIGHTING FIXTURE AND RECEPTACLE. ALL RECEPTACLES SHALL BE DUPLEX 20AMP GFCI TYPE WITH WEATHERPROOF IN USE COVERS THAT FULLY CLOSE WHILE IN USE. THE GROUNDING CONDUCTOR SHALL BE CONNECTED TO ALL RECEPTACLES SUCH THAT THE REMOVAL OF ANY RECEPTACLE WILL NOT INTERRUPT THE CONTINUITY TO OTHER RECEPTACLES.
12. ALL ENCLOSURES SHALL BE AS FOLLOWS UNLESS SPECIFICALLY NOTED OTHERWISE:
    - 12.1. UL LISTED FOR THE INTENDED PURPOSE. THIS INCLUDES UL508A FOR "ENCLOSED INDUSTRIAL CONTROL PANELS".
    - 12.2. ENCLOSURES MOUNTED INSIDE (NOT IN AN ELECTRICAL ROOM: NEMA-4 (min)
    - 12.2. ENCLOSURES MOUNTED INSIDE (IN AN ELECTRICAL ROOM: NEMA-12 (min)
    - 12.3. ENCLOSURES MOUNTED OUTSIDE: NEMA-4X STAINLESS STEEL.
    - 12.4. ALL ENCLOSURES SHALL BE PROVIDED WITH AMBIENT COMPENSATION AS REQUIRED BY THE INSTALLED EQUIPMENT. (ie. AIR CONDITIONER, HEATER, COOLING FANS, ETC.
    - 12.5. ALL ENCLOSURES SHALL BE PAD LOCKABLE.
13. MISCELLANEOUS JUNCTION BOXES AND THE WWJB:
    - 13.1. ALL WIRING INSIDE SHALL TERMINATE ON DIN RAIL MOUNTED FINGER-SAFE TERMINALS WITH PROPER RATINGS AND MARKED WITH THE TERMINAL MANUFACTURER'S TAGGING SYSTEM. PROVIDE PANDUIT WIREWAY, OR EQUAL, FOR THE ROUTING OF ALL WIRE AND CABLE INSIDE THE BOX. TERMINALS AND WIRING SHALL BE SEPARATED BY TYPE. (ie. INTRISICALLY SAFE, CONTROL, SIGNAL). MAINTAIN PROPER SEPARATION BETWEEN INTRINSICALLY SAFE AND NON-INTRINSICALLY SAFE CIRCUITS PER UL AND NEC.
    - 13.2. PROVIDE ANALOG/DISCRETE ISBR RELAYS FOR EACH FLOAT/SENSOR LOCATED IN THE WET WELL HAZARDOUS LOCATION.
    - 13.3. SPLIT BOLTS, WIRENUTS, BUTT-SPLICES AND THE LIKE ARE NOT ACCEPTABLE.
    - 13.4. THE ENCLOSURE SIZE SHALL BE (16"X16"X6" HxWxD MIN.). CONTRACTOR SHALL INCREASE THE SIZE OF EACH JUNCTION BOX AS REQUIRED PER NEC.
14. GROUND RING FOR EACH BUILDING:
    - 14.1. EXTEND 4/0 COPPER FROM MDP TO BUILDING GROUND RING. PROVIDE AND INSTALL A 4/0 GROUND RING W/A GROUND ROD AT EACH CORNER OF THE BUILDING.
    - 14.2. GROUND RING CONDUCTOR SHALL BE 30" BELOW GRADE.
    - 14.3. REFERENCE GROUNDING SPECIFICATIONS FOR ADDITIONAL REQUIREMENTS.
    - 14.4. EACH GROUND ROD SHALL BE 3/4"DIA X 10FT COPPER CLAD WITH THE TOP LOCATED 24" BELOW GRADE (MIN).
    - 14.5. ALL CONNECTIONS TO GROUND RODS SHALL BE BARE COPPER CAD WELDED.
    - 14.6. PROVIDE AN ENCLOSED WATER TIGHT EXTERIOR GROUND TEST POINT ENCLOSURE WITH ACCESS FROM GRADE LEVEL AT ONE CORNER OF THE BUILDING.
    - 14.7. PROVIDE AND INSTALL A CONCRETE ENCASED ELECTRODE PER NEC 250.52(A)(3).
    - 14.8. EXTEND A BELOW GRADE BARE COPPER CONDUCTOR (2/0 min.) TO EACH METAL RAILING, FENCE, EQUIPMENT STRUCTURE/CONCRETE PAD, SUPPORT STRUCTURE AND POURED CONCRETE REBAR REINFORCING SYSTEM.
15. EXHAUST FAN CONTROL PANEL (FCP) REQUIREMENTS:
    - 15.1. THE FAN CONTROL PANEL SHALL INCLUDE, BUT NOT BE LIMITED TO THE FOLLOWING DEVICES:
      - 15.1.1. ENCLOSURE PER NOTE-12
      - 15.1.2. FAN MOTOR CIRCUIT PROTECTOR AND CONTACTOR WITH ADJUSTABLE OVERLOAD.
      - 15.1.3. LOUVER CONTACTOR
      - 15.1.4. LOUVER FAIL-TO-OPEN TIMER WITH MULTIPLE CONTACTS:
        - 15.1.4.1. CONTACT-1: STOP FAN
        - 15.1.4.2. CONTACT-2: ACTIVATE THE FAULT LIGHT
        - 15.1.4.3. CONTACT-3: REMOTE ALARM INDICATION
      - 15.1.5. DOOR MOUNTED DEVICES:
        - 15.1.5.1. 120Vac MAIN CIRCUIT BREAKER AND PAD-LOCKABLE POWER ON/OFF SWITCH WITH DOOR INTERLOCK.
        - 15.1.5.2. HAND-OFF-AUTO SELECTOR SWITCH
        - 15.1.5.3. GREEN PILOT LIGHT (FAN RUNNING)
        - 15.1.5.4. RED PILOT LIGHT (FAN OVERLOAD TRIPPED)
        - 15.1.5.5. RED PILOT LIGHT (LOUVER FAILED TO OPEN)
        - 15.1.5.6. LOUVER FAIL-TO-OPEN RESET BUTTON
      - 15.1.6. HAND OR AUTO OPERATION:
        - 15.1.6.1. THE LOUVER IS POWERED OPEN AND DE-ENERGIZED FOR A SPRING RETURN TO CLOSE.
        - 15.1.6.2. THE LOUVER OPEN LIMIT SWITCH WILL ACTIVATE THE EXHAUST FAN.
        - 15.1.6.3. AUTO START IS INITIATED BY THERMOSTAT OR BY THE CONTINUOUS CYCLE TIMER
      - 15.1.7. STATUS CONTACTS: RUNNING, OVERLOAD FAULT, LOUVER FAIL-TO-OPEN FAULT

TYPICAL EXHAUST FAN CONTROL PANEL (FCP) STANDARD SCHEMATIC

REFERENCE NOTE-15 FOR ADDITIONAL REQUIREMENTS. 120V/1ø POWERED FAN SCHEMATIC SHOWN WITH ELECTRIC LOUVER DAMPER.

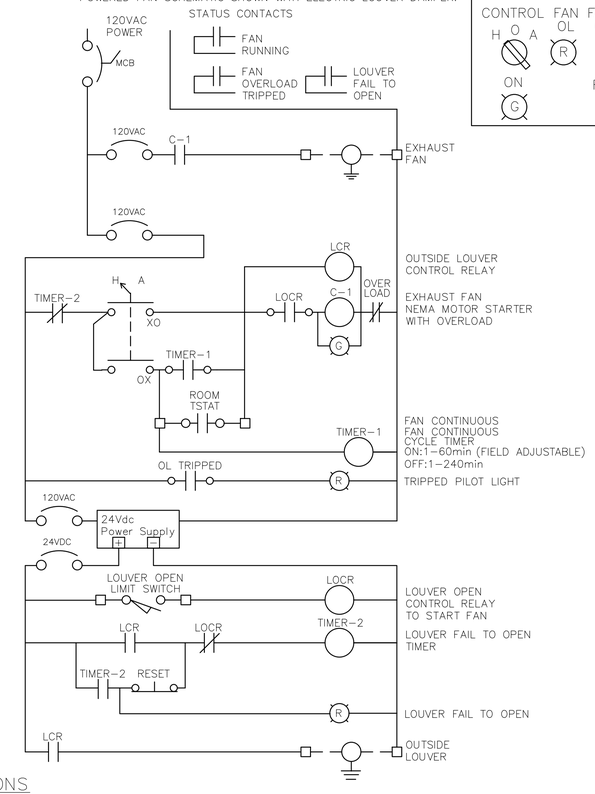

TYPICAL DOOR LAYOUT

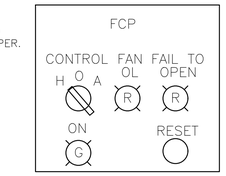

ABBREVIATIONS

(A Number Designates the Unit where applicable)

ATS	– AUTOMATIC TRANSFER SWITCH
CB	– CIRCUIT BREAKER
CVxLS	– CHECK VALVE LIMIT SWITCH
DISC	– MACHINE LOCAL DISCONNECT SWITCH
DPT	– PUMP DISCHARGE PRESSURE TRANSDUCER
DS	– DOOR SWITCH
FMT	– FLOW METER TRANSMITTER
GMB	– GENERATOR MAIN BREAKER
ISBR	– INTRINSICALLY SAFE BARRIER RELAY
J	– JUNCTION BOX
S	– LIGHT SWITCH
LM	– LOUVER MOTOR
MANUF	– MANUFACTURER
MB	– UTILITY METERBASE/CT CABINET
MBD	– SERVICE ENTRANCE MAIN BREAKER DISCONNECT
MDP	– MAIN DISTRIBUTION PANELBOARD
P	– PUMP
PB	– DISTRIBUTION PANELBOARD
PCP	– PUMP CONTROL PANEL
PFCP	– PUMP FLOAT CONTROL PANEL
R	– RECEPTACLE
SDPT	– WBS STATION DISCHARGE PRESSURE TRANSDUCER
SIPT	– WBS STATION INLET PRESSURE TRANSDUCER
SLT	– SUBMERSIBLE LEVEL TRANSDUCER
SPD	– SURGE PROTECTION DEVICE
SRLS	– SURGE RELIEF VALVE LIMIT SWITCH
T	– THERMOSTAT
TX	– TRANSFORMER
UG	– UNDER GROUND
UH	– UNIT HEATER
VFD	– VARIABLE FREQUENCY DRIVE
WBS	– WATER BOOSTER STATION
WP	– WEATHERPROOF
WWJB	– WET WELL JUNCTION BOX
WWPS	– WASTE WATER PUMP STATION

ELECTRICAL LEGEND

ALL SYMBOLS MAY NOT BE USED ON THIS CONTRACT

- +44" S — WALL MOUNTED TOGGLE SWITCH DIMENSION IS HEIGHT ABOVE FINISHED FLOOR
- S_3 — WALL MOUNTED TOGGLE SWITCH NO. INDICATES 3-WAY, 4-WAY, ETC.
- RECEPTACLE
- CONDUIT RUN
- INDICATES NO. OF WIRES (1-HOT,1-NEUTRAL & 1-GROUND)
- INDICATES A CONDUIT "HOMERUN" TO A DESIGNATED PANEL. NOT INTENDED TO BE ALL INCLUSIVE, REFERENCE THE POWER DISTRIBUTION DIAGRAM FOR CONDUIT/WIRE DETAILS
- PAD-LOCKABLE DISCONNECT SWITCH
- CMS — PAD-LOCKABLE COMBINATION MOTOR STARTER W/OVERLOADS & PHASE MONITORING RELAY
- GROUND ROD
- GROUND ROD FOR GROUND RING

WWPS AND WBS LIGHTING FIXTURE SCHEDULE:

LIGHTING FIXTURE SCHEDULE

FIXTURES SHALL BE PER THE SCHEDULE OR APPROVED EQUAL

TYPE	MANUF.	CAT. NUMBER	FIXTURE LAMPS MOUNTING	TYPE	VOLTS
A	LITHONIA	VAP-4000LM-WD-120-GZ10-40K-80CRI-STSL WET LOCATION & SURFACE MOUNT HARDWARE	SURFACE	LED	120VAC
AE	LITHONIA	VAP-4000LM-WD-120-GZ10-40K-80CRI-BSLT22C-STSL WET LOCATION & SURFACE MOUNT HARDWARE	SURFACE	LED	120VAC
B	MAXLITE	MLSWP20WLED50DSPC12 SMALL WALLPACK	SURFACE	LED	120VAC
C	LITHONIA	WEATHERPROOF DUAL HEAD LED FLOOD LIGHTS CONTROLLED BY SWITCH	SURFACE	LED	120VAC
EX	PHILIPS	ER55LDT212/27WRTP	SURFACE	LED	120VAC

DOMINION CONTROL SYSTEMS, INC.
11080 L□□d□□□r R□□d P.O. B□□6301 A□□□d□□A 23005
PHONE□804□752-6323 FAX□804□752-6774

Dewberry
Dewberry Engineers Inc.
4805 Lake Brook Drive, Suite 200
Glen Allen, Virginia 23060
PHONE: 804.290.7957
FAX: 804.290.7928
www.dewberry.com

ZION CROSSROADS
WATER BOOSTER PUMP STATION
AND WASTEWATER PUMP STATION
FLUVANNA COUNTY
DEPARTMENT OF PUBLIC WORKS
FLUVANNA COUNTY, VA.

KEY PLAN

SEAL

COMMONWEALTH OF VIRGINIA
D. L. Glasscock
Lic. No.036309
5/4/18
PROFESSIONAL ENGINEER

SCALE

No.	DATE	BY	Description

REVISIONS

DRAWN BY	DLG
APPROVED BY	DAV
CHECKED BY	DLG
DATE	MAY 2018

TITLE

WBS
GENERAL
ELECTRICAL
DIAGRAMS AND NOTES

PROJECT NO. 50078863

E0.2

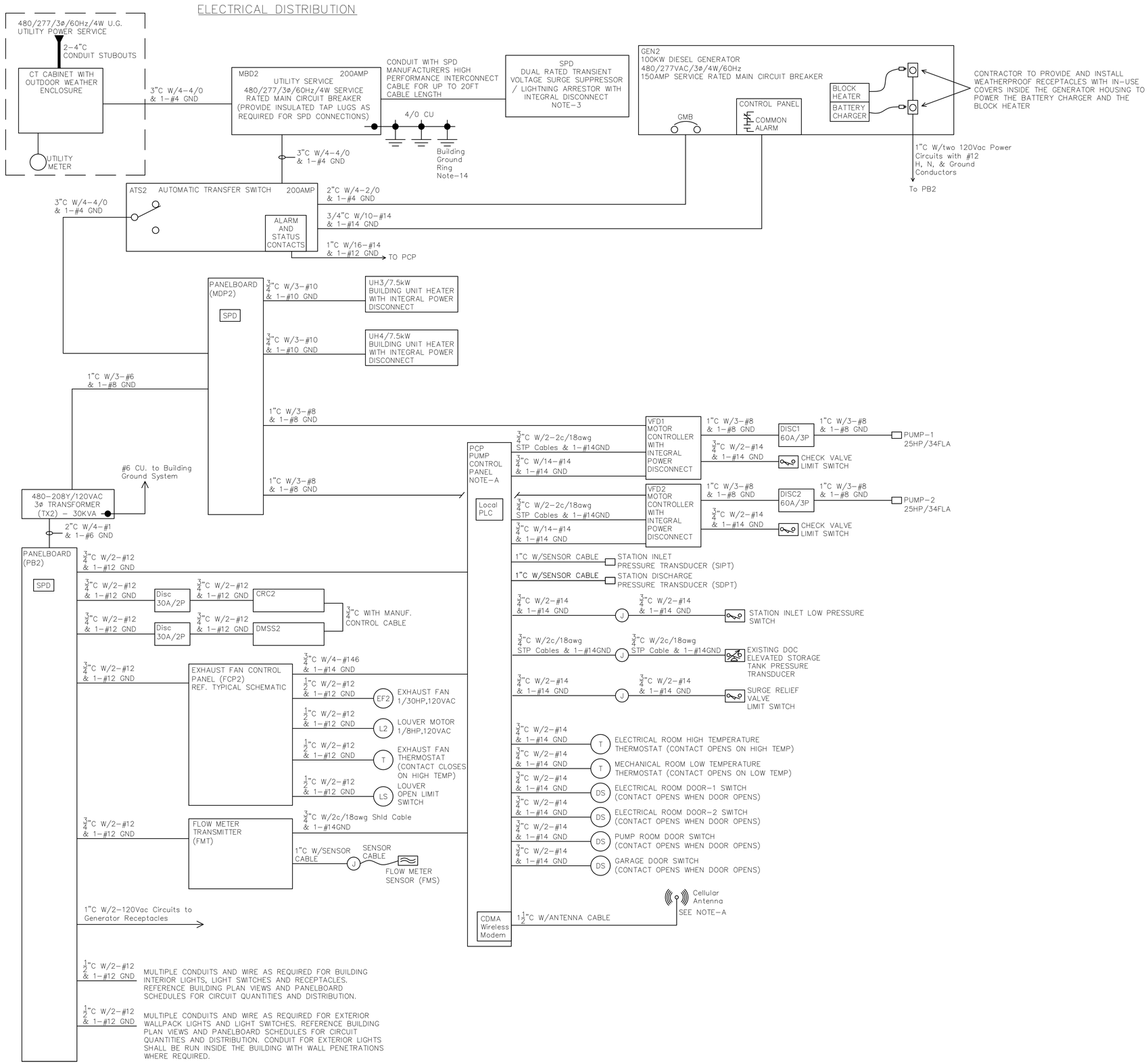

NOTE-A
PROVIDED BY OWNERS SYSTEMS INTEGRATOR FOR INSTALLATION BY THE CONTRACTOR. COORDINATE ALL WIRING TO/FROM THE CONTROL PANEL WITH THE OWNERS SYSTEMS INTEGRATOR.

Dewberry

Dewberry Engineers Inc.
4805 Lake Brook Drive, Suite 200
Glen Allen, Virginia 23060
PHONE: 804.290.7957
FAX: 804.290.7928
www.dewberry.com

ZION CROSSROADS
WATER BOOSTER PUMP STATION
AND WASTEWATER PUMP STATION
FLUVANNA COUNTY
DEPARTMENT OF PUBLIC WORKS
FLUVANNA COUNTY, VA.

KEY PLAN

SEAL

COMMONWEALTH OF VIRGINIA
D. L. Glasscock
Lic. No.036309
5/4/18
PROFESSIONAL ENGINEER

SCALE

No.	DATE	BY	Description

REVISIONS

DRAWN BY	DLG
APPROVED BY	DAV
CHECKED BY	DLG
DATE	MAY 2018

TITLE

WBS
ELECTRICAL
DIAGRAMS

PROJECT NO. 50078863

E2.0

DOMINION CONTROL SYSTEMS, INC.
11080 L□d□□r R□d P.O. B□□6301 A□□d□A 23005
PHONE 804 752-6323 FAX 804 752-6774

WBS PUMP STATION PANELBOARD SCHEDULES

PANELBOARD: MDP2, SERVICE RATED, (65kAIC)
MOUNTING: SURFACE
ENCLOSURE: NEMA-12, 30CKT (min)

MAIN BUSS: 200AMP, COPPER
VOLTAGE: 480Y/277VAC,3ø,4W,60Hz
INTERIOR: 200AMP/65kAIC MAIN BREAKER

LOAD DESCRIPTION	CB SIZE	# POLE	CKT NO	AMPS/PHASE øA	AMPS/PHASE øB	AMPS/PHASE øC	CKT NO	# POLE	CB SIZE	LOAD DESCRIPTION
PUMP1 VFD1	50	3	1	34				3	50	PUMP2 VFD2
				34			2			
			3		34					
					34		4			
			5			34				
						34	6			
UNIT HEATER UH3 (7.5KW)	20	3	7	10				3	20	UNIT HEATER UH4 (7.5KW)
				10			8			
			9		10					
					10		10			
			11			10				
						10	12			
480-208Y/120Vac 3-PHASE TRANSFORMER TX2 (30kVA)	50	3	13	36				3	20	SPARE BREAKER
				--			14			
			15		36					
					--		16			
			17			36				
						--	18			
PREPARED SPACE	--	3	19	--				3	--	PREPARED SPACE
				--			20			
			21		--					
					--		22			
			23			--				
						--	24			
PREPARED SPACE	--	3	25	--				3	**	SURGE PROTECTION DEVICE INTEGRAL TO PANELBOARD. ** - COORDINATE CIRCUIT BREAKER SELECTION WITH SPD MANUFACTURER. NOTE-3
				--			26			
			27		--					
					--		28			
			29			--				
							30			
				124	124	124	TOTAL AMPS			

PANELBOARD: PB2, SERVICE RATED (22kAIC)
MOUNTING: SURFACE
ENCLOSURE: NEMA-12, 30CKT (min)

MAIN BUSS: 200AMP, COPPER
VOLTAGE: 208Y/120VAC,3ø,4W,60Hz
INTERIOR: 110AMP/22kAIC MAIN BREAKER

LOAD DESCRIPTION	CB SIZE	# POLE	CKT NO	AMPS/PHASE øA	AMPS/PHASE øB	AMPS/PHASE øC	CKT NO	# POLE	CB SIZE	LOAD DESCRIPTION
BUILDING EXTERIOR LIGHTING	20	1	1	5				1	20 GFI	PUMP ROOM RECEPTACLES
				5			2			
PUMP ROOM LIGHTING CIRCUIT-1	15	1	3		5			1	15	PUMP ROOM LIGHTING CIRCUIT-2
					5		4			
CONTROL ROOM LIGHTING	20	1	5			5		1	20 GFI	CONTROL ROOM RECEPTACLES
						5	6			
PUMP CONTROL PANEL	20	1	7	5				1	20 GFI	OUTSIDE RECEPTACLES
				5			8			
SPARE BREAKER	20	1	9		--			1	20 GFI	EXHAUST FAN PANEL (FCP2)
					6		10			
GENERATOR BATTERY CHARGER	20	1	11			5		1	20	GENERATOR BLOCK HEATER
						8	12			
SPARE BREAKER	20	1	13	--				2	15	SPLIT SYSTEM HEAT PUMP OUTDOOR UNIT
				6			14			
SPLIT SYSTEM HEAT PUMP INDOOR UNIT	20	2	15		13.5					
					6		16			
			17			13.5		1	20	SPARE BREAKER
						--	18			
PREPARED SPACE	--	1	19	--				3	**	SURGE PROTECTION DEVICE INTEGRAL TO PANELBOARD. ** - COORDINATE CIRCUIT BREAKER SELECTION WITH SPD MANUFACTURER. NOTE-3
				--			20			
PREPARED SPACE	--	1	21		--					
					--		22			
PREPARED SPACE	--	1	23			--				
						--	24			
PREPARED SPACE	--	1	25	--				1	--	PREPARED SPACE
				--			26			
PREPARED SPACE	--	1	27		--			1	--	PREPARED SPACE
					--		28			
PREPARED SPACE	--	1	29			--		1	--	PREPARED SPACE
						--	30			
				26	35.5	36.5	TOTAL AMPS			

BOS 2019-01-09 p.1454/1491

Dewberry

Dewberry Engineers Inc.
4805 Lake Brook Drive, Suite 200
Glen Allen, Virginia 23060
PHONE: 804.290.7957
FAX: 804.290.7928
www.dewberry.com

ZION CROSSROADS
WATER BOOSTER PUMP STATION
AND WASTEWATER PUMP STATION
FLUVANNA COUNTY
DEPARTMENT OF PUBLIC WORKS
FLUVANNA COUNTY, VA.

KEY PLAN

SEAL

COMMONWEALTH OF VIRGINIA
D. L. Glasscock
Lic. No.036309
5/4/18
PROFESSIONAL ENGINEER

SCALE

No.	DATE	BY	Description

REVISIONS

DRAWN BY DLG
APPROVED BY DAV
CHECKED BY DLG
DATE MAY 2018

TITLE

WBS
ELECTRICAL
SCHEDULES AND NOTES

PROJECT NO. 50078863

E2.1

ELECTRICAL ENGINEERING CONSULTING SERVICES
DCS
DOMINION CONTROL SYSTEMS, INC.
11080 L□d□□□r R□d P.O. B□6301 A□□d□A 23005
PHONE□804□752-6323 FAX□804□752-6774

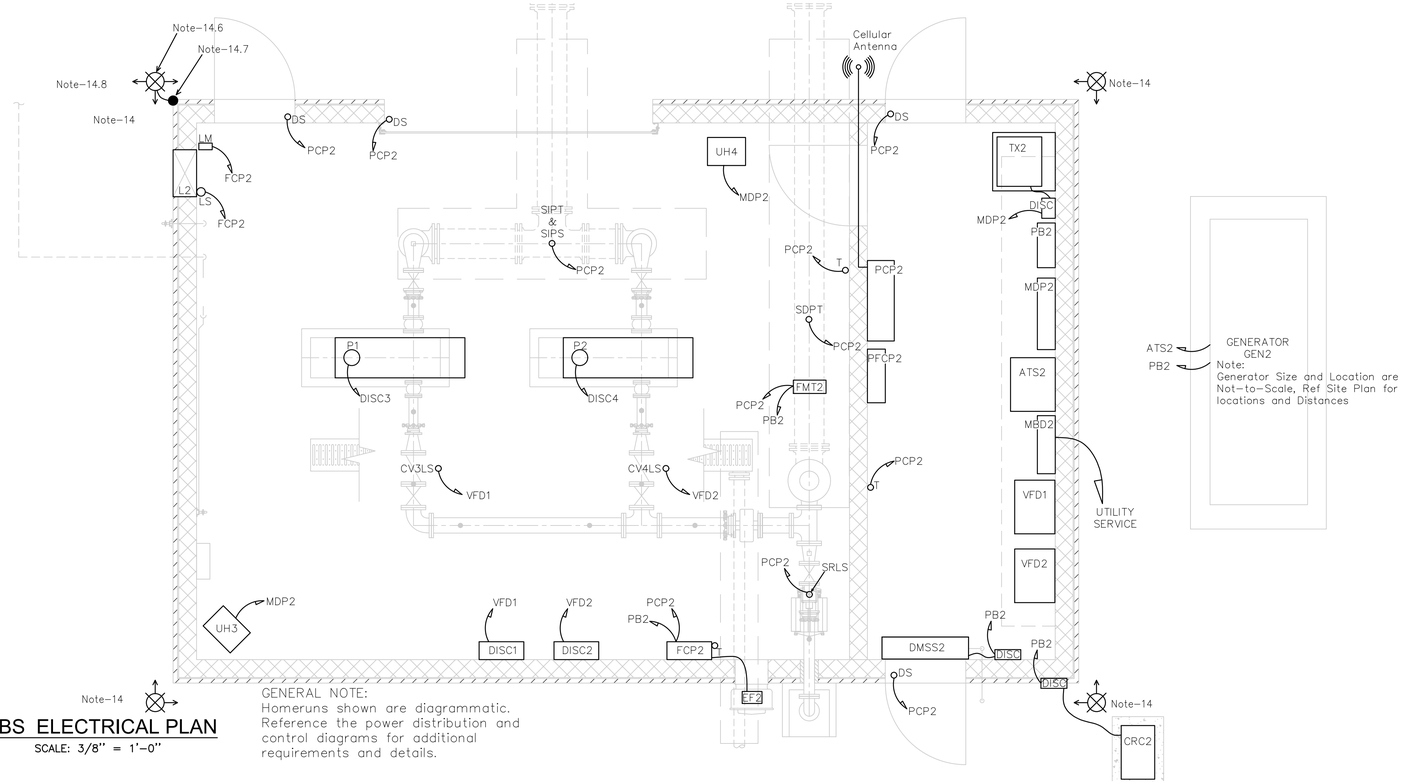

GENERAL NOTE:
Homeruns shown are diagrammatic. Reference the power distribution and control diagrams for additional requirements and details.

WBS ELECTRICAL PLAN

SCALE: 3/8" = 1'-0"

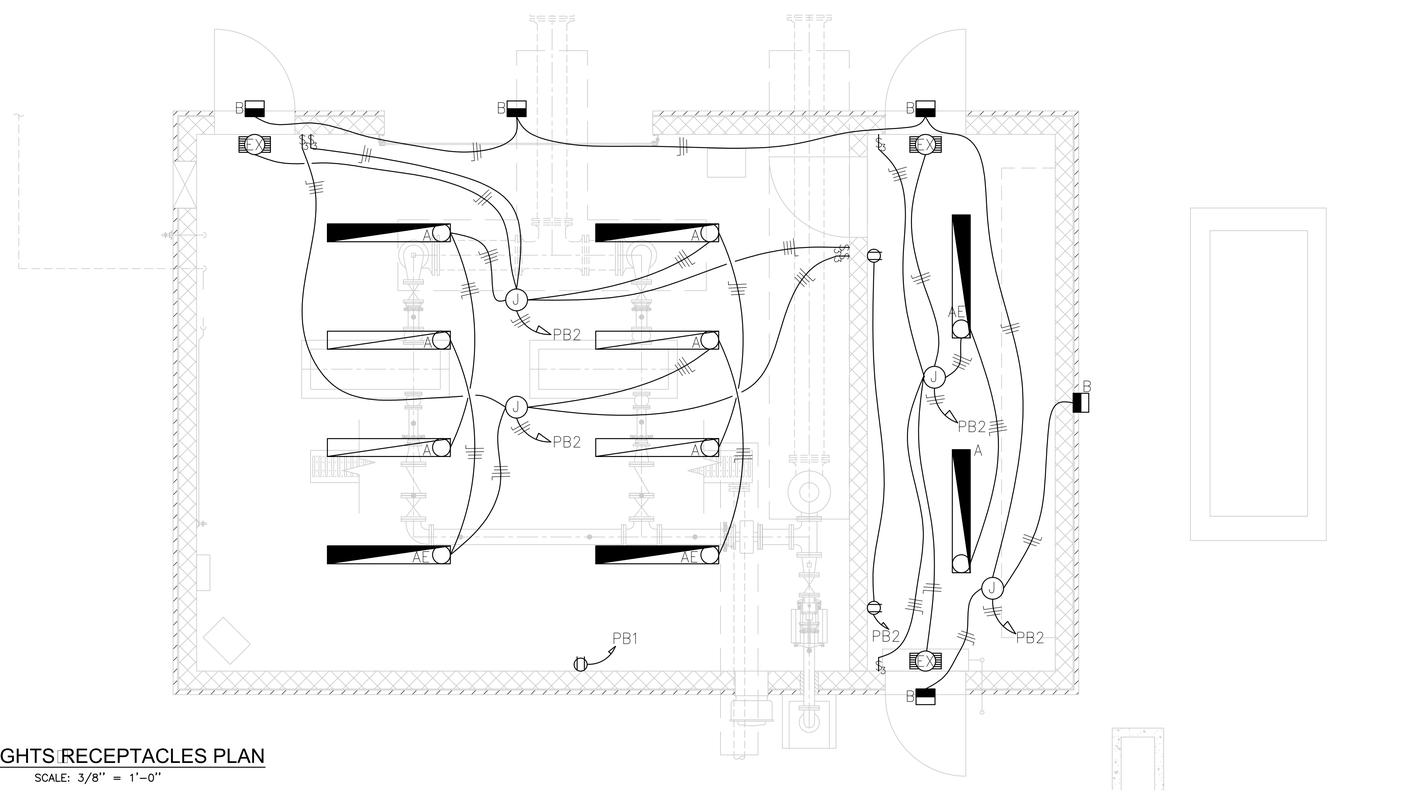

WBS LIGHTS RECEPTACLES PLAN

SCALE: 3/8" = 1'-0"

Dewberry

Dewberry Engineers Inc.
4805 Lake Brook Drive, Suite 200
Glen Allen, Virginia 23060
PHONE: 804.290.7957
FAX: 804.290.7928
www.dewberry.com

ZION CROSSROADS
WATER BOOSTER PUMP STATION
AND WASTEWATER PUMP STATION

FLUVANNA COUNTY
DEPARTMENT OF PUBLIC WORKS

FLUVANNA COUNTY, VA.

KEY PLAN

SEAL

COMMONWEALTH OF VIRGINIA
D. L. Glasscock
Lic. No.036309
5/4/18
PROFESSIONAL ENGINEER

SCALE

No.	DATE	BY	Description

REVISIONS

DRAWN BY	DLG
APPROVED BY	DAV
CHECKED BY	DLG
DATE	MAY 2018

TITLE

WBS
ELECTRICAL
VIEWS AND NOTES

PROJECT NO. 50078863

E2.2

DOMINION CONTROL SYSTEMS, INC.
11080 L d r R d P.O. B 6301 A d A 23005
PHONE 804 752-6323 FAX 804 752-6774

Exhibit J

Zion Crossroads WBS & WWPS
Milestone Schedule

Description	Value
Mobilization to Site (5%)	$95,000.00
WBS	
Install Erosion Control/Strip Topsoil	$15,000.00
Install 2" Waterline & 4" Drain Line	$18,000.00
Install 12" DIP Waterline	$90,000.00
Topsoil/Fine Grade/Agg. Surfacing	$16,000.00
Concrete Bldg Footings	$12,000.00
Concrete Bldg Slab & Trench Drain	$30,000.00
Masonry	$50,000.00
Wood Trusses & Roofing	$80,000.00
EIFS	$18,000.00
Building Insulation	$4,000.00
Doors & Hdw.	$28,000.00
O/H Door	$7,000.00
Paint Bldg.	$20,000.00
Receive Pumps	$30,000.00
Install Pumps/Piping Interior	$100,000.00
Plumbing/HVAC	$25,000.00
Signs - Interior	$2,000.00
Genset	$60,000.00
Genset Deck	$18,000.00
Electrical	$110,000.00
Electrical Ductbank	$35,000.00
WBS Testing & Startup	$9,000.00
WWPS	
Install Erosion Control/Strip Topsoil	$15,000.00
Install 2" Waterline	$25,000.00
Install 16" Gravity Sewer	$62,000.00
Install Precast MH's	$70,000.00
Install Precast Wetwell	$102,000.00
Install 4" & 6" DIP	$12,000.00
Install 8" Force Main	$12,000.00
Topsoil/Fine Grade/Agg. Surfacing	$16,000.00
Asphalt Paving & Base	$15,000.00
Chain Link Fence	$15,000.00
Concrete Mow Strip	$12,000.00
Concrete Bldg Slab & Trench Drain	$34,000.00
Precast Bldg	$90,000.00
Interior Masonry Wall	$10,000.00
Doors & Window	$10,000.00
Paint Bldg. Interior	$15,000.00
Paint Wetwell Coating	$17,500.00
Receive Pumps	$160,000.00

Install Pumps/Piping Interior	$100,000.00
Plumbing/HVAC	$30,000.00
Signs - Interior	$2,000.00
Genset	$60,000.00
Genset Deck	$18,000.00
Electrical	$110,000.00
Electrical Ductbank	$5,000.00
WWPS Testing & Startup	$9,000.00
Unit Prices	
Unsatisfactory Soil	$600.00
Structural Fill	$900.00
Grand Total	$1,900,000.00

TAB E

FLUVANNA COUNTY BOARD OF SUPERVISORS
BCC APPOINTMENTS STAFF REPORT

MEETING DATE:	Jan 9, 2019
AGENDA TITLE:	Board, Commission, and Committee Appointments
MOTION:	**I move the Board of Supervisors recommend, to the Circuit Court, appointment to:**

Board/Commission/Committee	Appointees	Begins Term	Ends Term
Board of Zoning Appeals		Jan 1, 2019	12/31/2022

BCC VACANCIES AND APPLICANTS				
BCC Vacancies	**Applicants**	**Appt**	**District**	**Current BCC Appointments / Other Notes**
Board of Zoning Appeals	Peter Von Keyserling	Reapp.	Columbia	BZA

DISCUSSION:	
ENCLOSURES:	Candidate Application

APPLICATION TO SERVE ON BOARDS/COMMISSION/COMMITTEES

County of Fluvanna

Name:	Election District:
Peter H. von Keyserling	☒ Columbia ☐ Cunningham ☐ Fork Union ☐ Palmyra ☐ Rivanna ☐ Other

Mailing Address (including City, State, & ZIP)	Physical Address (if different)
1479 Kents Store Way Kents Store, VA 23084	

Years Lived in Fluvanna	Cell Phone – preferred?	Home Phone – preferred?	Email
28		434-589-5097	peter.aquqply@embarqmail.com

EXPERIENCE/PROFESSIONAL EXPERTISE/EDUCATION (Please provides dates of education and experience.):

BS Industrial Eng 1965 Va Tech
Masters and Doctorate, Ashland Univ. Ashland, OH 1985
CEO Merit Management 1986-1994
CEO Jacob Engle Foundation 1984-1986

CURRENT OR PRIOR SERVICE ON BOARDS/COMMISSIONS/OR COMMITTEES:

County comprehensive plan development
BZA

CIVIC ACTIVITIES AND MEMBERSHIPS (Roles with fraternal, business, church, or social groups – please provide dates):

Crossroads Community Church - treasurer 2016-2019
Habitat for humanity
Bd of Thommason Foundation

REASON(S) FOR WANTING TO SERVE FLUVANNA COUNTY:

To help maintain and preserve the county per the Comprehensive Plan, and treat property owners fairly.

Applicants are considered as vacancies occur and your application will be kept on file for three years.

Fluvanna County does not discriminate on the basis of race, color, national origin, sex, religion, age or disability in employment or the provision of services.

Submit by email (clerk@fluvannacounty.org) or mail to:
Clerk, Board of Supervisors, PO Box 540, Palmyra, VA 22963

By signing below you are indicating that you have read and understand the attached Fluvanna County BCC Attendance Policy and that you agree to abide by the Bylaws of any Board, Commission, or Committee to which you may be appointed.

Applicant's Signature *(Typing name below serves as digital signature)*	Date
Peter von Keyserling	1/3/2019 10:15

PLEASE INDICATE BELOW ANY BOARDS, COMMISSIONS, OR COMMITTEES ON WHICH YOU WISH TO SERVE.

X	Board, Commission, Committee
	Agricultural/Forestal District Advisory Committee
	Audit Committee
	Board of Equalization (BOE)
X	Board of Zoning Appeals (BZA)
	Building Code of Appeals Board
	Central Virginia Regional Jail (CVRJ) Authority
	Columbia Task Force (CARE)
	Community Policy & Management Team (CPMT)
	Economic Development Authority (EDA)
	Economic Develop. & Tourism Advisory Council (EDTAC)
	Family Assessment and Planning Team (FAPT)
	Finance Board
	Fluvanna Partnership for Aging Committee
	Fork Union Sanitary District (FUSD) Advisory Committee
	James River Water Authority (JRWA)
	JAUNT Board

X	Board, Commission, Committee (cont.)
	Jefferson Area Board of Aging (JABA) Advisory Council
	Jefferson Area Board of Aging (JABA) Board of Directors
	Library Board of Trustees
	Monticello Area Community Action Agency (MACAA)
	Palmyra Area Revitalization Committee (PARC)
	Parks & Recreation Advisory Board
	Piedmont Virginia Community College (PVCC) Board
	Planning Commission
X	Region Ten Community Services Board
	Rivanna River Basin Commission
	Social Services Board
	Thomas Jefferson Planning District Commission (TJPDC)
	Thomas Jefferson Water Resources Protection Foundation
	Youth Advisory Council (YAC)
	OTHER:

Fluvanna County Board, Committee, and Commission Attendance Policy

(Approved June 17, 2015)

1. BCC members shall attend at least two-thirds of all scheduled meetings in each calendar year while serving.
2. The Chairperson of the board, commission, or committee shall notify the Clerk to the Board of Supervisors of any absences exceeding this policy.
3. The Clerk shall report these findings to the Board of Supervisors, typically in closed session.
4. Appointees who do not meet the attendance requirement without a valid reason(s) may be deemed to have rendered an implied resignation of that appointment.
5. The Board may choose to accept the resignation and appoint another person to fill the appointed position. The Board may also override the implied resignation and extend the appointment, if extenuating circumstances so dictate.
6. This requirement shall apply to all boards, commissions, or committees listed on the attached application form, provided however, that if State or County Ordinance addresses attendance requirements in an alternative manner, such law shall prevail.

Office Use Only		
Application Received On:	01/03/2019	Application Received By: Kelly Belanger Harris
Acknowledgement Sent:	01/03/2019	
Renewal Date:		Remarks: updating
Renewal Date:		
Renewal Date:		
Renewal Date:		

TAB F

FLUVANNA COUNTY BOARD OF SUPERVISORS
AGENDA ITEM STAFF REPORT

MEETING DATE:	Jan 9, 2019				
AGENDA TITLE:	Community Volunteer Update				
MOTION(s):	**N/A**				
STRATEGIC INITIATIVE?	Yes	No	**If yes, list initiative(s):**		
		X			
AGENDA CATEGORY:	Public Hearing	Action Matter	Presentation	Consent Agenda	Other
			X		
STAFF CONTACT(S):	Carol Tracy Carr, Community Volunteer Coordinator				
PRESENTER(S):	Carol Tracy Carr, Community Volunteer Coordinator				
RECOMMENDATION:					
TIMING:	N/A				
DISCUSSION:					
FISCAL IMPACT:	N/A				
POLICY IMPACT:	N/A				
LEGISLATIVE HISTORY:	N/A				
ENCLOSURES:	N/A				
REVIEWS COMPLETED:	Legal	Finance	Purchasing	HR	Other

FLUVANNA COUNTY BOARD OF SUPERVISORS
AGENDA ITEM STAFF REPORT

TAB G

MEETING DATE:	January 9, 2019				
AGENDA TITLE:	Approval of Open Space Contract Renewal for Ginger Smith Johnson				
MOTION(s):	**I move to approve the open space contract for Ginger Smith Johnson for tax map parcel 21-23-2; agreement shall remain in effect for a term of five (5) consecutive years.**				
STRATEGIC INITIATIVE?	Yes	No	**If yes, list initiative(s):**		
		X			
AGENDA CATEGORY:	Public Hearing	Action Matter	Presentation	Consent Agenda	Other
				X	
STAFF CONTACT(S):	Andrew M. Sheridan, Jr., Commissioner of the Revenue				
PRESENTER(S):	Andrew M. Sheridan, Jr., Commissioner of the Revenue				
RECOMMENDATION:	Approval				
TIMING:	Immediate				
DISCUSSION:	This property qualifies for an open space contract with Fluvanna County in accordance with Code Section 58.1-3229 et. seq. of the Virginia State Code.				
FISCAL IMPACT:	None				
POLICY IMPACT:	In accordance with Section 58.1-3229 et. seq. of Virginia State Code.				
LEGISLATIVE HISTORY:	N/A				
ENCLOSURES:	-Ginger Smith Johnson's executed open space contract -Map of tax map parcel 21-23-2				
REVIEWS COMPLETED:	Legal	Finance	Purchasing	HR	Other

CONTRACT FOR OPEN SPACE LAND USE ASSESSMENT

THIS AGREEMENT, made this 18 day of December, 2018, by and between Ginger Smith Johnson, party(ies) of the first part, hereinafter called the Grantor, and the COUNTY OF FLUVANNA, a political subdivision of the Commonwealth of Virginia, party of the second part, hereinafter called the County:

WITNESSETH

WHEREAS, the Grantor owns certain real estate, described below, hereinafter called the Property; and

WHEREAS, the County is the local governing body having real estate tax jurisdiction over the Property; and

WHEREAS, the County has determined:

A. That it is in the public interest that the Property should be provided or preserved for conservation of agricultural and forestal land and of wildlife and

B. That the property meets the applicable criteria for real estate devoted to open-space use as prescribed in Article 4 (Section 58.1-3229 et. seq.) of Chapter 32 of Title 58.1 of the Code of Virginia, and the standards for classifying such real estate prescribed by the Director of the Virginia Department of Conservation and Recreation; and

C. That the provisions of this agreement meet the requirements and standards prescribed under section 58.1-3233 of the Code of Virginia for recorded commitments by landowners not to change an open-space use to a non-qualifying use; and

WHEREAS, the Grantor is willing to make a written recorded commitment to preserve and protect the open-space uses of the Property during the term of this agreement in order for the Property to be taxed on the basis of a use assessment, and the Grantor has submitted an application for such taxation to the Commissioner of the Revenue of the County pursuant to Section 58.1-3234 of the Code of Virginia and Section 20-4-2(d) of the Fluvanna County Code; and

WHEREAS, the County is willing to extend the tax for the Property on the basis of a use assessment commencing with the next succeeding tax year and continuing for the term of this agreement, in consideration of the Grantor's commitment to preserve and protect the open-space uses of the property, and on the condition that the Grantor's application is satisfactory and that all other requirements of Article 4, Chapter 32, Title 58.1 of the Code of Virginia and Section 20-4-2(d) of the Fluvanna County Code are complied with.

NOW, THEREFORE, in consideration of the recital and the mutual benefits, covenants and terms herein contained, the parties hereby **COVENANT** and **AGREE** as follows:

1. This agreement shall apply to all the following described real estate:

   Tax Map Parcel: 21-23-2 (11.0 acres)

2. The Grantor agrees that during the term of this agreement:

   A. There shall be no change in the use or uses of the Property that exist as of the date of this agreement to any use that would not qualify as open-space use. The qualifying use for the Property is conservation of agricultural and forestal land and of wildlife.
   B. There shall be no display of billboards, signs or other advertisements on the property except to (i) state solely the name of the Grantor and the address of the Property, (ii) advertise the sale or lease of the Property, (iii) advertise the sale of goods or services produced pursuant to the permitted use of the Property, or (iv) provide warnings. No sign shall exceed four feet by four feet.
   C. There shall be no construction, placement or maintenance of any structure on the Property unless such structure is either:
      1) on the Property as of the date of this agreement; or
      2) related to and compatible with the open-space uses of the Property which this agreement is intended to protect or provide for.
   D. There shall be no dumping or storage of trash, garbage, ashes, waste, junk, abandoned property or other unsightly or offensive material on the Property.
   E. There shall be no filling, excavating, mining, drilling, removal of topsoil, sand, gravel, rock, minerals, or other materials which alters the topography of the Property, except as required in the construction of permissible building structures and features under this agreement.

F. There shall be no construction or placement of fences, screens, hedges, walls or other similar barriers which materially obstruct the public view of scenic areas of the Property.

G. The Grantor may engage in agricultural, horticultural or silvicultural activities and remove vegetation which constitutes a safety, a health or an ecological hazard, e.g., vegetation classified as noxious weed pursuant the Code of Virginia (1950), as amended.

H. There shall be no alteration or manipulation of natural water courses, shores, marshes, swamps, wetlands or other water bodies, nor any activities or uses which adversely affect water quality, level or flow.

I. On areas of the Property that are being provided or preserved for conservation of land, floodways or other natural resources, or that are to be left in a relatively natural or undeveloped state, there shall be no operation of dune buggies, all-terrain vehicles, motorcycles, motorbikes, snowmobiles or other motor vehicles, except to the extent necessary to inspect, protect or preserve the area.

J. There shall be no industrial or commercial activities, conducted on the property, except for the continuation of agricultural, horticultural or silvicultural activities; or activities that are conducted in a residence or an associated outbuilding such as garage, smokehouse, small shop or similar structure which is permitted on the property.

K. There shall be no separation or split-off of lots, pieces or parcels from the property. The Property may be sold or transferred during the term of this agreement only as the same entire parcel that is the subject to this agreement, provided, however, that the Grantor may grant to a public body or bodies open-space, conservation or historic preservation easements which apply to all or part of the Property.

3. This agreement shall be effective upon acceptance by the County, provided, however, that the real estate tax for the Property shall not be extended on the basis of its use value until the next succeeding tax year following timely application by the Grantor for the use assessment and taxation in accordance with Section 20-4-2(d) of the Fluvanna County Code. Thereafter, this agreement shall remain in effect for a terms of five (5) consecutive years.

4. Nothing contained herein shall be construed as giving to the public a right to enter upon or to use the Property or any portion thereof, except as the Grantor may otherwise allow, consistent with the provisions of this agreement.

5. The County shall have the right at all reasonable times to enter the Property to determine whether the Grantor is complying with the provisions of this agreement.

6. Nothing in this agreement shall be construed to create in the public or member thereof a right to maintain a suit for any damages against the Grantor for any violation of this agreement.

7. Nothing in this agreement shall be construed to permit Grantor to conduct any activity or to build or maintain any improvement which is otherwise prohibited by law.

8. If any provision of this agreement is determined to be invalid by a court of competent jurisdiction, the remainder of the agreement shall not be affected thereby.

9. The provisions of this agreement shall run with the land and be binding upon the parties, their successors, assigns, personal representatives, and heirs.

10. Words of one gender used herein shall include the other gender, and words in the singular shall include words in the plural, whenever the sense requires.

11. This agreement may be terminated in the manner provided in Section 15.1-1513 of the Code of Virginia for withdrawal of land from an agricultural, forestal or an agricultural and forestal district.

12. Upon termination of this agreement, the Property shall thereafter be assessed and taxed at its fair market value, regardless of its actual use, unless the County determines otherwise in accordance with applicable law.

13. NOTICE: WHEN THE OPEN SPACE USE OR USES BY WHICH THE PROPERTY QUALIFIED FOR ASSESSMENT AND TAXATION ON THE BASIS OF USE CHANGES TO A NONQUALIFING USE OR USES, OR WHEN THE ZONING FOR THE PROPERTY CHANGES TO A MORE INTENSIVE USE AT THE REQUEST OF THE GRANTOR, THE PROPERTY, OR SUCH PORTION OF THE PROPERTY WHICH NO LONGER QUALIFIES SHALL BE SUBJECT TO ROLLBACK TAXES IN ACCORDANCE WITH SECTION 58.1-3237 OF THE CODE OF VIRGINIA. THE GRANTOR SHALL BE SUBJECT TO ALL OF THE OBLIGATIONS AND LIABILITIES OF SAID CODES SECTION.

Ginger Johnson (SEAL)
Landowner

_____ (SEAL)
Co-owner (s)

STATE OF VIRGINIA
COUNTY OF FLUVANNA, to-wit:

The foregoing instrument was acknowledged before me by

Ginger Johnson, Landowner (s)

on this 18th day of December, 2018.

ASHLEY STONE
Notary Public 283195
Commonwealth of Virginia
My Commission Expires January 31, 2019

My commission expires: 1/31/19

Ashley Stone
Notary Public

COUNTY OF FLUVANNA, VIRGINIA

By: _____
County Administrator

STATE OF VIRGINIA
COUNTY OF FLUVANNA, to-wit:

The foregoing instrument was acknowledged before me by

_____, Fluvanna County Administrator

on this _____ day of _____, _____.

My commission expires: _____

_____
Notary Public

Fluvanna County, VA WebGIS Parcels - PIN: 21-23-2

Located off of Mountain Laurel Road in Palmyra, VA 22963

December 27, 2018

1:5,266

0 0.045 0.09 0.18 mi

0 0.05 0.1 0.2 km

Address Points

Roads

Interstate

Primary

Secondary

Other

Parcels

Place Names

Town Boundary

Railroads

Driveways

Building Footprints

Tax Map Grid

County Boundary

Surrounding Counties

Address Point Labels

Road Labels

Interstate

Primary

Secondary

Other

Source: Esri, DigitalGlobe, GeoEye, Earthstar Geographics, CNES/Airbus DS, USDA, USGS, AeroGRID, IGN, and the GIS User Community

TAB H

FLUVANNA COUNTY BOARD OF SUPERVISORS
AGENDA ITEM STAFF REPORT

MEETING DATE:	Jan 9, 2019
AGENDA TITLE:	New Public Works Director Salary
MOTION(s):	**I move to ratify a hiring salary of $82,000.00 for the new Director of Public Works, Mr. Calvin R. Hickman, effective January 28, 2019.**

STRATEGIC INITIATIVE?	Yes	No	**If yes, list initiative(s):**	
		X		

AGENDA CATEGORY:	Public Hearing	Action Matter	Presentation	Consent Agenda	Other
				XX	

STAFF CONTACT(S):	Steven M. Nichols, County Administrator, Jessica Rice, HR Manager
PRESENTER(S):	Jessica Rice, HR Manager
RECOMMENDATION:	Approval
TIMING:	Current

DISCUSSION:

Mr. Calvin R. Hickman has been selected as our new Public Works Director, and started in his new position on January 28, 2019. Based on his experience, education, and breadth of new responsibilities, he merits a salary above the minimum, and in this case, above the County Administrator's 15% authority.

Recommend salary of $82,000, which is above the County Administrator's salary range hiring authority. Details shown in the chart below.

Public Works Director - Pay Band 23	
Previous Employee Salary	$ 87,356
Pay Band Minimum	$ 63,780
Mid-range	$ 79,724
Maximum	$ 95,669
15% Above Base	$ 73,347
28% Above Base	$ 82,000

FISCAL IMPACT:	Net salary savings of $5,356 annually, plus benefit savings
POLICY IMPACT:	N/A

LEGISLATIVE HISTORY:	N/A				
ENCLOSURES:	None				
REVIEWS COMPLETED:	Legal	Finance	Purchasing	HR	Other
		XX		**XX**	

TAB I

Capital Reserve Maintenance Fund Request

MOTION: I move that the Board of Supervisors approve a Capital Reserve Maintenance Fund Request to:
Provide $8,948.00 from the Capital Reserve Maintenance Fund to pay the costs of:

Section 1 - REQUEST

Requesting Dept. / Agency:	Dept / Agency Contact:	Date of Request:
Public Works PW19-004	Peter Welch	Dec 13, 2018

Phone:	Fax:	email:	Fiscal Year:
(434) 591-1925	(434) 591-1924	pwelch@fluvannacounty.org	FY19

Reserve Fund Purpose Category: Unexpected equipment failure

Description of Project/Repair	Qty	Unit Price	Total Price
Oil Furnace replacement unit 1- Old Courthouse	1	$8,948.00	$8,948.00
		Total Request:	**$8,948.00**

Description and Justification for Proposed Use

Install 3.5 ton indoor unit, Lenox equip., programmable thermostat, steam humidifier and control

Department / Agency Head Name:	Signature	Date
Peter Welch / Assistant Director		12/13/18

Section 2 - REVIEW

Recommended?			Date
☑ Yes ☐ No	County Fin	Digitally signed by Eric Dahl Date: 2019.01.03 08:41:05 -05'00'	
Recommended? ☑ Yes ☐ No	Count	Digitally signed by Steven M. Nichols Date: 2019.01.02 15:52:20 -05'00'	Date

Section 3 - BOARD OF SUPERVISORS

Approved?	Decision Date:	Comments:
☐ Yes ☐ No		

SERVICE OF CENTRAL VIRGINIA, INC.

COMMERCIAL AIR CONDITIONING & HEATING SERVICE • 24 HOUR SERVICE • [illegible]

603 Rozanna Avenue • Charlottesville, VA 22903 • [illegible] • [illegible]

October 24, 2018

Mr. Peter Welch
Fluvanna County
P.O. Box 299
Palmyra, VA 22963

RE: Old Courthouse Oil Furnace Unit #1

Mr. Welch:

Thank you for your confidence in Cii Service by letting us quote you on the replacement of the oil furnace with a heat pump. The unit will have a five-year compressor warranty and a one-year parts warranty.

- Cii Service will furnish the following to ensure complete and reliable operation of your unit:
  - ✓ Lock out and tag out all power and oil supply
  - ✓ Recover refrigerant and recycle
  - ✓ Disconnect and remove old furnace
  - ✓ Install a 3.5 ton outdoor unit (Using Lennox Equipment)
    - Low ambient head pressure control
    - Weather proof kit
  - ✓ Install a 3.5 ton indoor unit (Using Lennox Equipment)
    - 15 KW electric heat package
    - Freeze stat
  - ✓ Install a Programmable thermostat
  - ✓ Install all duct to accommodate new unit
  - ✓ Install a steam humidifier and control
  - ✓ Install all refrigerant piping and install liquid line drier
  - ✓ Install a drain line with overfill cut off switch
  - ✓ Pressure test system and evacuate with a standing rise test
  - ✓ Charge system with new refrigerant
  - ✓ Start system, check operation and super heat

✓ Log unit information for your records

All electrical will be provided by other

Total Cost Equipment, materials, Labor and permits **NTE $8,948.00**

This quote is good for thirty days or subject to revision

We look forward to working with you in the future. Please contact me if you have any questions at
434-977-5626 or 800-868-5610 and E-mail me at cedwards@ciiservice.com

Please visit us for news and information at our web site www.ciiservice.com

Sincerely,

Cii Service of Central Virginia, Inc.

Curtis E. Edwards

Curtis E. Edwards
Regional Manager
CEE/vae

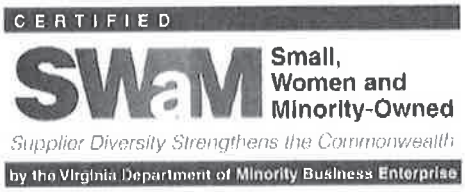

TAB J

Capital Reserve Maintenance Fund Request

MOTION: I move that the Board of Supervisors approve a Capital Reserve Maintenance Fund Request to:
Provide $6,061.00 from the Capital Reserve Maintenance Fund to pay the costs of:

Section 1 - REQUEST

Requesting Dept. / Agency:	Dept / Agency Contact:	Date of Request:
Public Works PW19-005	Peter Welch	Dec 13, 2018

Phone:	Fax:	email:	Fiscal Year:
(434) 591-1925	(434) 591-1924	pwelch@fluvannacounty.org	FY19

Reserve Fund Purpose Category: Unexpected equipment failure

Description of Project/Repair	Qty	Unit Price	Total Price
Social Services heat pump #31 replacement	1	$6,061.00	$6,061.00
		Total Request:	**$6,061.00**

Description and Justification for Proposed Use

Wall mounted water source heat pump.

Department / Agency Head Name:	Signature	Date
Peter Welch / Assistant Director		12/13/18

Section 2 - REVIEW

Recommended?			Date
☑ Yes ☐ No	County Fir r	Digitally signed by Eric Dahl Date: 2019.01.03 08:40:48 -05'00'	
Recommended? ☑ Yes ☐ No	Count	Digitally signed by Steven M. Nichols Date: 2019.01.02 15:51:42 -05'00'	Date

Section 3 - BOARD OF SUPERVISORS

Approved?	Decision Date:	Comments:
☐ Yes ☐ No		

FLUVANNA COUNTY BOARD OF SUPERVISORS
MEETING PACKAGE ATTACHMENTS

Y/N	Item
X	Unassigned Fund Balance Report
X	BOS Contingency Balance Report
X	Capital Reserve Balances Memo
	Fluvanna County Bank Balances
	Building Inspections Report
X	VDOT Monthly Report

Virginia Department of Transportation

Culpeper District, Louisa Residency

Fluvanna County Monthly Report: January 2019

Fluvanna Mileage, Structures

PRIMARY MILES	SECONDARY MILES	STRUCTURES	TOTAL MILES
102.34	598.62	75	700.96

Fatal Accidents

DATE	LOCATION	ALCOHOL	RESTRAINT
05/05	Route 250, at Route 631 Troy Rd	No	No
08/24	Route 250	Hit & Run	Pedestrian
09/18	Route 607	No	N/A
10/17	Route 619, East of Route 660	No	N/A
**Of the 843 fatalities in VA in 2017, 208 were related to distracted driving and 308 were motor vehicle occupants not wearing a seatbelt.			

Link to SmaRteScale information
Link to SmaRteScale Projects (Filter for Fluvanna Co. Projects)

SMART SCALE — Funding the Right Transportation Projects in Virginia

SmartScale Round 3 Applications:

- Thomas Jefferson Pkwy (Rte 53) & Turkeysag Trail (Rte 1015)
- James Madison Hwy (Rte 15) & Bybees Church Rd (Rte 613)
- James Madison Hwy (Rte 15) & Hunters Lodge Rd (Rte 631)
- Route 250 at Toy Road (Route 631)

Key Dates:

- Commonwealth Transportation Board will release scores in early 2019

Projects:

PROJECT	LAST MILESTONE	NEXT MILESTONE	AD DATE
Route 53 Safety improvements at Route 618, Roundabout, (UPC:96938)	Authorize ROW (JUL 2018)	Obtain Environmental Permits (JAN 2019)	Anticipated MAR 2020
Route 680 – Rural Rustic (UPC:107558)	CN Begins (State Forces)	Completion	Anticipated Completion Summer 2019
Route 629 Bridge Replacement (UPC 104848)	Construction Authorization	CN Begins (State Forces)	Anticipated Completion December 2019
Route 600-618 Intersection Improvements (UPC 111739)	Authorize PE/Scoping (JAN 2018)	Environmental Review Process	Anticipated FEB 2022

Additional Road Projects:

- **On-Call Pipe Replacements** (UPC 106020)
- **District Wide Guardrail Repair and/or Replacement** (UPC 106849)

- **District Wide ADA Compliance** (UPC 108027)
- **On-Call District Wide Pavement Marking** (UPC 108282)
- **District-Wide Primary Rumble-Strips, 9999-967-280** (UPC 106978)

State-Force and District-Wide Bridge Projects:

- **District Wide Bridge Deck Cleaning and Washing** (UPC 105980) ;
- **District Wide Bridge Maintenance** (UPC 105979);
- **Route 623 over Venable Creek,** Completed;
- **Route 600 over Rivanna River Debris Removal,** Completed September 10th

Resurfacing Projects:

VDOT provided the County with a list of routes included in the 2018 resurfacing schedule. Customers can view VDOT's resurfacing schedule and route status on VDOT's public website via the following link: **Link to http://www.virginiaroads.org/ (Select "Web Maps" and "Statewide Paving Status")**

31 of 31 routes on the 2018 Paving Schedule have been completed.

Fluvanna County Resurfacing					
Plant Mix			Surface Treatment		
Schedule	Miles	Cost/Estimate	Schedule	Miles	Cost/Estimate
2017	6.76	$ 1,093 K	2017	52.29	$ 587K
2018	6.38	$ 1,015 K	2018	73.86	$ 550K

Link to http://www.virginiaroads.org/ (Select "MAINTENANCE & CONSTRUCTION")

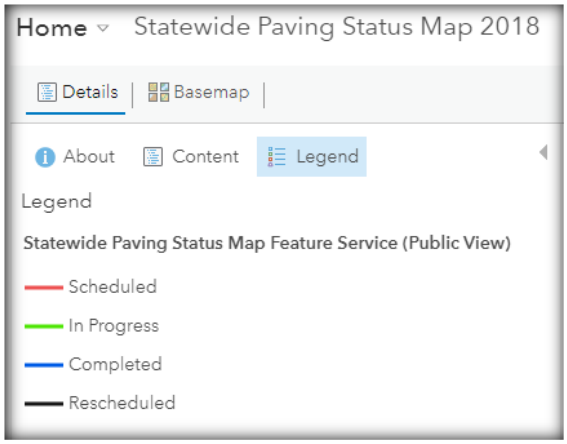

Traffic Engineering

Studies under Review:

- Route 250 speed study, from Route 631 to Route 15.
- Route 53 shoulder safety improvements (proximity 4800 block +/-)
    - Corridor safety study ongoing

Completed Studies:

- Route 600/616 intersection: sight-distance and pavement marking improvements completed
- Route 629/631 intersection review completed; VDOT is coordinating with property owners to perform minor grading to improve sight distance

County Safety and Operational Improvements:

- Route 250 at Route 631 (Troy Rd): VDOT is coordinating with property owners to perform minor grading to improve sight distance
    - Due to rain delays, contractor anticipates starting mid to late December.
- Village of Palmyra Traffic Circle: County and VDOT staff plan to simulate EMS response prior to installing pavement markings;
- Route 53 at Route 619 (Cunningham): VDOT continues to evaluate this intersection for interim and long-term safety improvements

Area Land Use

Fluvanna County Plan/Plat Review - Received Nov-Dec 2018							
Project Name	Routes/ Address	Submission Type	VDOT Contact	VDOT Received Date	Locality Due Date	VDOT Comment Date	Status
JRWA Raw Water Main	6-3857 East River Rd	Site Plan	Mark Wood	11/2/2018	12/14/2018	11/2/2018	Review Complete - Revision Required
Bear Investment Company Plat	629 - Deep Creek Rd	Preliminary Plat Review	Mark Wood	11/8/2018	12/21/2018	11/20/2018	Review Complete - Acceptable
Village Oaks Final Road Plans Revised 8-125	618 - Lake Monticello Rd	Site Plan	Mark Wood	11/14/2018	12/28/2018	12/12/2018	Review Complete - Revision Required
JRWA Raw Water Main		Site Plan	Mark Wood	11/19/2018	1/2/2019	11/19/2018	Review Complete - Acceptable
Mapledale LLC Boundary Line Adjustment		Final Plat Review	Mark Wood	11/19/2018	1/2/2019	11/26/2018	Review Complete - Acceptable
Owen & Michelle Rankin Minor Subdivision		Preliminary Plat Review	Mark Wood	11/19/2018	1/2/2019	11/29/2018	Review Complete - Revision Required
Broadleaf Farms, LLC		Preliminary Plat Review	Mark Wood	12/13/2018	1/25/2019		Review Underway
Kennedy Boundary Line Adjustment		Final Plat Review	Mark Wood	12/21/2018	2/1/2019	12/26/2018	Review Complete - Acceptable

Maintenance Activities

VDOT crews in Palmyra and Zion Crossroads Area HQ have responded to **155** Work Orders in FY19. Top actives have been dead animal removal and tree removal

BOS Manual:
http://www.virginiadot.org/business/resources/local_assistance/BOSmanual.pdf

Alan Saunders, P.E.
Residency Engineer
VDOT Louisa Residency
540-967-3710

MEMORANDUM

Date: January 9, 2019
From: Eric Pollitt – Management Analyst
To: Board of Supervisors
Subject: FY19 BOS Contingency Balance

The FY19 BOS Contingency line balance is as follows:

Beginning Budget:	**$150,000.00**
Less: FY19 Non-Profit Budget Allocations Change – 05.16.18	-$14,180.00
Less: FY19 C.A.R.E. Task Force Container for Clean Up Day – 09.19.18	-$500.00
Less: FY19 Building & Program Feasibility Study – 11.20.18	-$10,690.00
Available:	**$124,630.00**

MEMORANDUM

Date: January 9, 2019
From: Eric Pollitt – Management Analyst
To: Board of Supervisors
Subject: FY19 Capital Reserve Balances

The FY19 Capital Reserve account balances are as follows:

County Capital Reserve:

FY19 Budget Allocation:	**$0**
FY18 Carryover	$67,256
FY18 Closed Out Projects	$163,865
Total FY19 Budget:	**$231,121**
Less: I.T. Air Conditioning Unit – 09.19.18	-$7,000
Less: FSPCA Building Renovations – 10.17.18	-$45,000
Less: Palmyra Rescue Squad Building Renovations – 10.17.18	-$15,000
FY19 Available:	**$164,121**

Schools Capital Reserve:

FY19 Budget Allocation:	**$150,000**
FY18 Carryover	$116,308
FY18 Closed Out Projects	$13,046
Total FY19 Budget:	**$266,308**
Plus: BOS Unassigned Fund Balance: Middle School Debt Proceeds – 09.19.18	$72,001
Less: Abrams Abatement: Classroom & Crawl Space – 09.19.18	-$72,001
Less: Carysbrook & Central Elementary Blacktop Repair – 09.19.18	-$10,650

Less: Central Elementary School Partition – 09.19.18	-$12,000
Less: Bus 21 Engine/ Motor Replacement – 11.07.18	-$22,500
Less: FCHS Water Tank – 12.19.18	-$2,450
Less: FMS Fire Alarm Install, Removal, and Replacement – 12.19.18	-$4,422
FY19 Available:	**$227,332**

MEMORANDUM

Date: January 9, 2019
From: Eric Pollitt – Management Analyst
To: Board of Supervisors
Subject: Unassigned Fund Balance

FY18 Year End Audited Total Unassigned Fund Balance:	**$14,532,691**
Unassigned Fund Balance – 12% Target Per Policy:	**$8,687,777**
Unassigned Fund Balance – Excess Above Policy Target:	**$5,844,914**
Less: FY19 Abrams Abatement Classroom and Crawl Space – 09.19.18	-$72,001
Less: FY19 Fire Hydrant Installation (JRWA) – 10.17.18	-$142,500
Less: FY18-19 Various Carryover Requests – 11.20.18	-$240,700
Current FY19 Unassigned Fund Balance – Excess Above Policy Target:	**$5,389,713**

Fluvanna County Monthly Bank and Investment Account Balances and Earnings Report

Month	Wells Fargo Commercial Checking - Main Bank	BB&T - Cost Recovery Fund	VA Investment Pool (VIP) Stable NAV Liquidity Pool	VIP Stable NAV Earnings	VA Investment Pool (VIP) 1-3 Year High Quality Bond Fund	VIP 1-3 Year Earnings	Ending Balance TOTAL
Jul-16	$ 10,053,334	$ 332,174			$ 7,152,669	$ (2,455)	**$ 17,538,177**
Aug-16	$ 6,733,878	$ 377,034			$ 7,142,574	$ (10,095)	**$ 14,253,486**
Sep-16	$ 3,127,373	$ 417,387			$ 7,150,195	$ 7,622	**$ 10,694,955**
Oct-16	$ 2,408,014	$ 465,326			$ 7,144,306	$ (5,889)	**$ 10,017,646**
Nov-16	$ 6,337,061	$ 511,779			$ 7,111,653	$ (32,653)	**$ 13,960,493**
Dec-16	$ 10,222,656	$ 568,084			$ 7,112,980	$ 1,327	**$ 17,903,720**
Jan-17	$ 6,794,517	$ 601,955			$ 7,124,549	$ 11,562	**$ 14,521,021**
Feb-17	$ 6,276,766	$ 648,260			$ 7,131,495	$ 6,947	**$ 14,056,520**
Mar-17	$ 4,372,044	$ 699,524			$ 7,133,155	$ 1,660	**$ 12,204,723**
Apr-17	$ 1,856,533	$ 734,130			$ 7,147,486	$ 14,331	**$ 9,738,149**
May-17	$ 5,134,100	$ 772,183			$ 7,155,655	$ 8,168	**$ 13,061,937**
Jun-17	$ 14,272,459	$ 815,451			$ 7,155,722	$ 67	**$ 22,243,632**
Jul-17	$ 9,473,371	$ 854,310	$ -	$ -	$ 7,178,718	$ 12,852	**$ 17,506,399**
Aug-17	$ 5,699,776	$ 890,237	$ -	$ -	$ 7,185,438	$ 11,237	**$ 13,775,452**
Sep-17	$ 1,497,668	$ 431,051	$ -	$ -	$ 7,192,355	$ (4,928)	**$ 9,121,074**
Oct-17	$ 3,270,241	$ 35,223	$ 135	$ 135	$ 4,170,653	$ (4,230)	**$ 7,476,252**
Nov-17	$ 7,739,856	$ 79,183	$ 135	$ 0	$ 4,162,255	$ (8,398)	**$ 11,981,429**
Dec-17	$ 13,640,973	$ 144,416	$ 135	$ 0	$ 4,160,490	$ (1,765)	**$ 17,946,014**
Jan-18	$ 9,813,762	$ 195,944	$ 135	$ 0	$ 4,149,498	$ (10,993)	**$ 14,159,339**
Feb-18	$ 8,302,311	$ 183,287	$ 50,138	$ 2	$ 4,146,305	$ (3,192)	**$ 12,682,040**
Mar-18	$ 4,474,342	$ 89,291	$ 2,224,967	$ 1,829	$ 4,153,316	$ 7,011	**$ 10,941,916**
Apr-18	$ 2,043,660	$ 67,042	$ 2,303,479	$ 3,512	$ 4,148,585	$ (4,731)	**$ 8,562,767**
May-18	$ 11,822,481	$ 18,984	$ 2,422,389	$ 3,910	$ 4,162,798	$ 14,213	**$ 18,426,652**
Jun-18	$ 9,675,143	$ 73,593	$ 9,435,967	$ 13,578	$ 4,161,567	$ (1,231)	**$ 23,346,270**
Jul-18	$ 4,394,222	$ 114,515	$ 13,619,588	$ 20,600			**$ 18,128,324**
Aug-18	$ 1,677,219	$ 37,320	$ 11,767,732	$ 23,145			**$ 13,482,271**
Sep-18	$ 2,615,110	$ 37,723	$ 6,811,719	$ 13,986			**$ 9,464,552**
Oct-18	$ 4,668,338	$ 207,298	$ 3,821,042	$ 9,323			**$ 8,696,679**
Nov-18	$ 9,679,741	$ 62,912	$ 3,824,996	$ 7,420			**$ 13,567,649**
Dec-18	$ 7,075,743	$ 123,079	$ 11,828,462	$ 14,583			**$ 19,027,284**
Jan-19							**$ -**
Feb-19							**$ -**
Mar-19							**$ -**
Apr-19							**$ -**
May-19							**$ -**
Jun-19							**$ -**